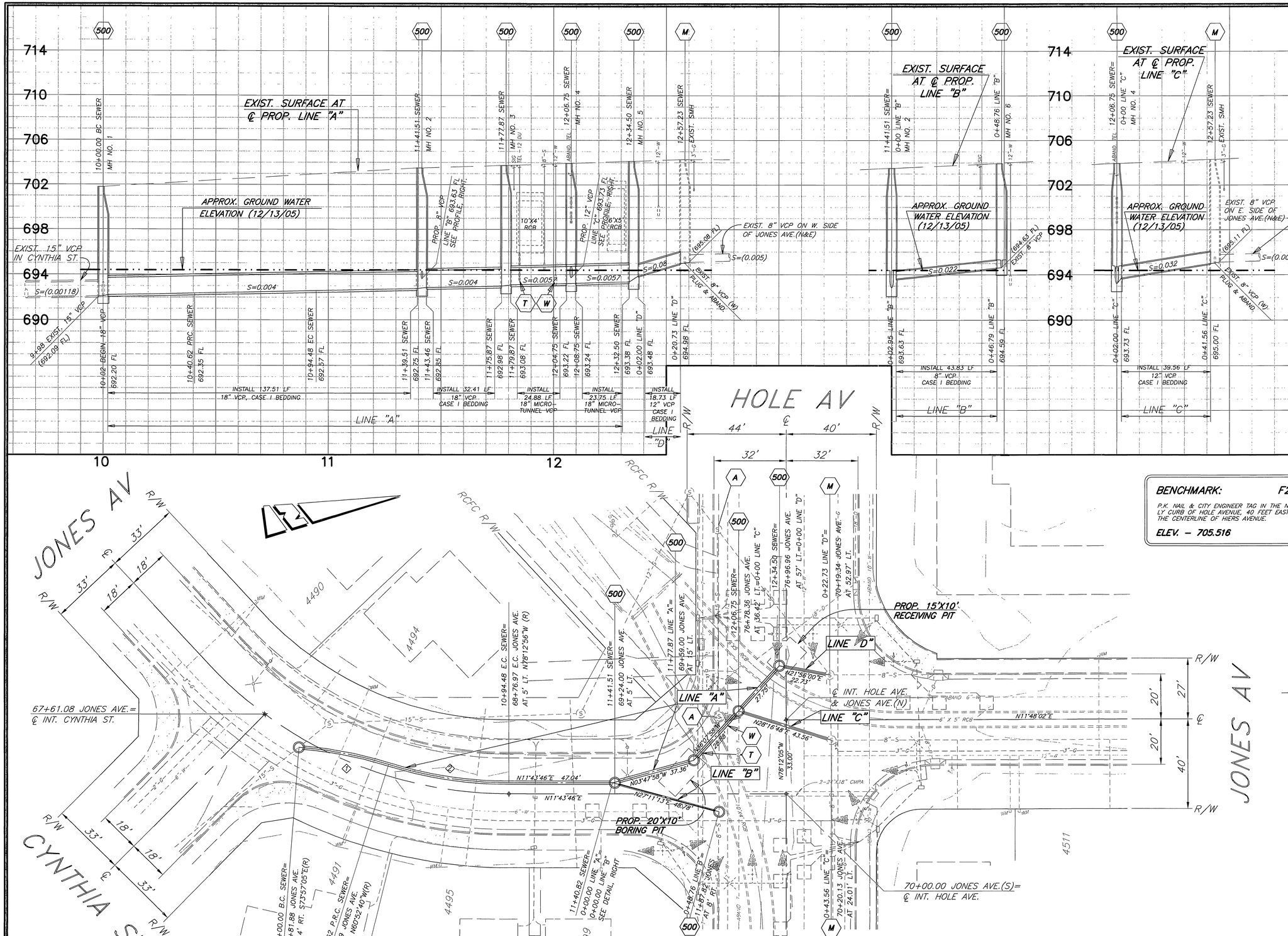

GENERAL CONSTRUCTION NOTES:

1. EXISTING UTILITIES SHOWN ON THE PLAN, ARE PLOTTED FROM UTILITY RECORDS. THE CONTRACTOR IS REQUIRED TO TAKE DUE PRECAUTIONARY MEASURES TO LOCATE AND PROTECT ALL UTILITIES WHETHER OR NOT SHOWN ON THIS PLAN.
2. PRIME CONTRACTORS BIDDING THIS WORK SHALL HAVE A CLASS "A", "C-34", OR "C-42" LICENSE.
3. ALL ELEVATIONS SHOWN ON THE PLANS SHALL BE STAKED IN THE FIELD.
4. CONSTRUCTION SHALL BE IN ACCORDANCE WITH THE CITY OF RIVERSIDE STANDARD DRAWINGS AND STANDARD SPECIFICATIONS FOR PUBLIC WORKS CONSTRUCTION, 2003 EDITION.
5. CONTRACTOR SHALL POTHOLE AND VERIFY LOCATIONS AND ELEVATIONS OF UTILITIES CROSSING THE PROPOSED SEWER PRIOR TO THE START OF CONSTRUCTION.
6. BACKFILLING OF TRENCH AND PAVEMENT REPLACEMENT SHALL BE DONE PER CITY OF RIVERSIDE STANDARD DRAWING 453.

CONSTRUCTION LEGEND:

- NUMBERS ABOVE 100 IN A HEXAGON ON THE PLAN REFER TO THE RESPECTIVE STANDARD DRAWING AND SHALL BE CONSTRUCTED ACCORDINGLY, UNLESS MODIFICATIONS ARE NOTED ON THE PLAN. ANY NUMBER SHOWN BELOW THE STANDARD DRAWING NUMBER INDICATES THE SPECIFIC ALTERNATE TO BE CONSTRUCTED. MODIFICATIONS ARE NOTED ON THE PLAN. ANY NUMBER SHOWN BELOW THE STANDARD DRAWING NUMBER INDICATES THE SPECIFIC ALTERNATE TO BE CONSTRUCTED.
- M — PLUG & ABANDON EXISTING OUTLET PIPES. RECHANNEL MANHOLE BASE TO FLOW THROUGH PROP. SEWER PIPES PER STANDARD DRAWING 500.
- W — EXISTING 12" WATERLINE TO BE RELOCATED PRIOR TO CONSTRUCTION BY PUBLIC UTILITIES DEPT., WATER DIVISION TO CLEAR PROP. BORING OPERATIONS.
- A — ABANDON MANHOLE AND ADJACENT CONDUITS.
- T — EXISTING 12-DU TELEPHONE CONDUIT TO BE RELOCATED PRIOR TO CONSTRUCTION BY SBC TO CLEAR PROP. BORING OPERATIONS.

BENCHMARK: F2-M3

P.K. NAIL & CITY ENGINEER TAG IN THE NORTHERLY CURB OF HOLE AVENUE, 40 FEET EASTERLY OF THE CENTERLINE OF HIERS AVENUE.

ELEV. – 705.516

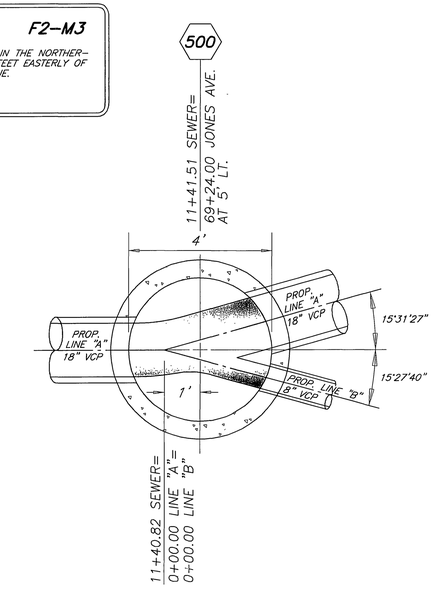

DETAIL MANHOLE NO. 2

SCALE: 1"=2'

CURVE DATA				
◇	△	R	L	T
1	13° 04'38"	178'	40.63'	20.40'
2	17° 25'26"	178'	42.41'	27.28'

ENGINEER IN RESPONSIBLE CHARGE

LAUREN F. CALDWELL

R.C.E. No. 39441 expires 12/31/2005

DATE 2/2/2006

REGISTERED PROFESSIONAL ENGINEER — LAUREN F. CALDWELL — No. 39441 — Exp. 12-31-2007 — CIVIL — STATE OF CALIFORNIA

MARK	REVISIONS	APPR	DATE

DESIGNED BY SK DRAWN BY SK, LFH CHECKED BY

CITY OF RIVERSIDE, CALIFORNIA
PUBLIC WORKS DEPARTMENT

APPROVED BY	BY	DATE
PRINCIPAL ENGINEER		
CONTRACT ADMINISTRATOR		2/2/06
INSPECTION		
SEWER DIVISION		
STREET SERVICES		
PARKS DEPARTMENT		
	CS	2/3/06

APPROVED BY — CITY ENGINEER

DATE 2/3/06

JONES AVE. & HOLE AVE. RELIEF SEWER

ACCT NO · 9777023203-44030109

S-1924

SHEET 1 OF 1

HORIZONTAL SCALE: 1"=20' VERTICAL SCALE: 1"=4'

FILE NO

INDEXED 2-8-06 GH