RIVERSIDE COUNTY FLOOD CONTROL AND WATER CONSERVATION DISTRICT

LEGEND

ANCHOR & POLE	
CATCH BASIN	
CULVERT WITH HEADWALLS	
FENCE (NOT CHAIN LINK)	X
FENCE (CHAIN LINK TO BE CONST.)	●
FENCE (CHAIN LINK EXIST.)	O
FIRE HYDRANT	
GAS LINE	G2
GAS METER	
MANHOLE	
POWER POLE	
RIGHT OF WAY LINE (FLOOD CONTROL)	R/W
SANITARY SEWER	SS8
STORM DRAIN LINE	SD18
STREET RIGHT OF WAY	
TEMPORARY CONST. EASEMENT	T.C.E.
WALL - BLOCK, OR MASONRY	
WATER LINE	W4
WATER METER	
WATER VALVE	
IRRIGATION LINE	12"Conc. IRR.
MTD TELEPHONE	MTD
BURIED TELEPHONE CABLE	T
UNDERGROUND ELEC. CONDUIT	E
FIRE ALARM CONDUIT	F
STREET LIGHT CONDUIT	S.L.
PRIVATE OR SECONDARY ROAD	
EXISTING FLOW LINE	
TRAFFIC SIGNAL CONDUIT	SIG.
STREET LIGHT STANDARD WITH OR WITHOUT TRAFFIC SIGNALS OR TRAFFIC SIGNAL STANDARD	
SOIL BORING LOG No.	2

ABBREVIATIONS

C.B.	CATCH BASIN
C.M.P.	CORRUGATED METAL PIPE
J.S.	JUNCTION STRUCTURE
M.H.	MANHOLE
P.C.C.	POINT OF COMPOUND CURVE
P.I.	POINT OF INTERSECTION
P.R.C.	POINT OF REVERSE CURVE
R.C.B.	REINFORCED CONCRETE BOX
R.C.P.	REINFORCED CONCRETE PIPE
T.S.	TRANSITION STRUCTURE

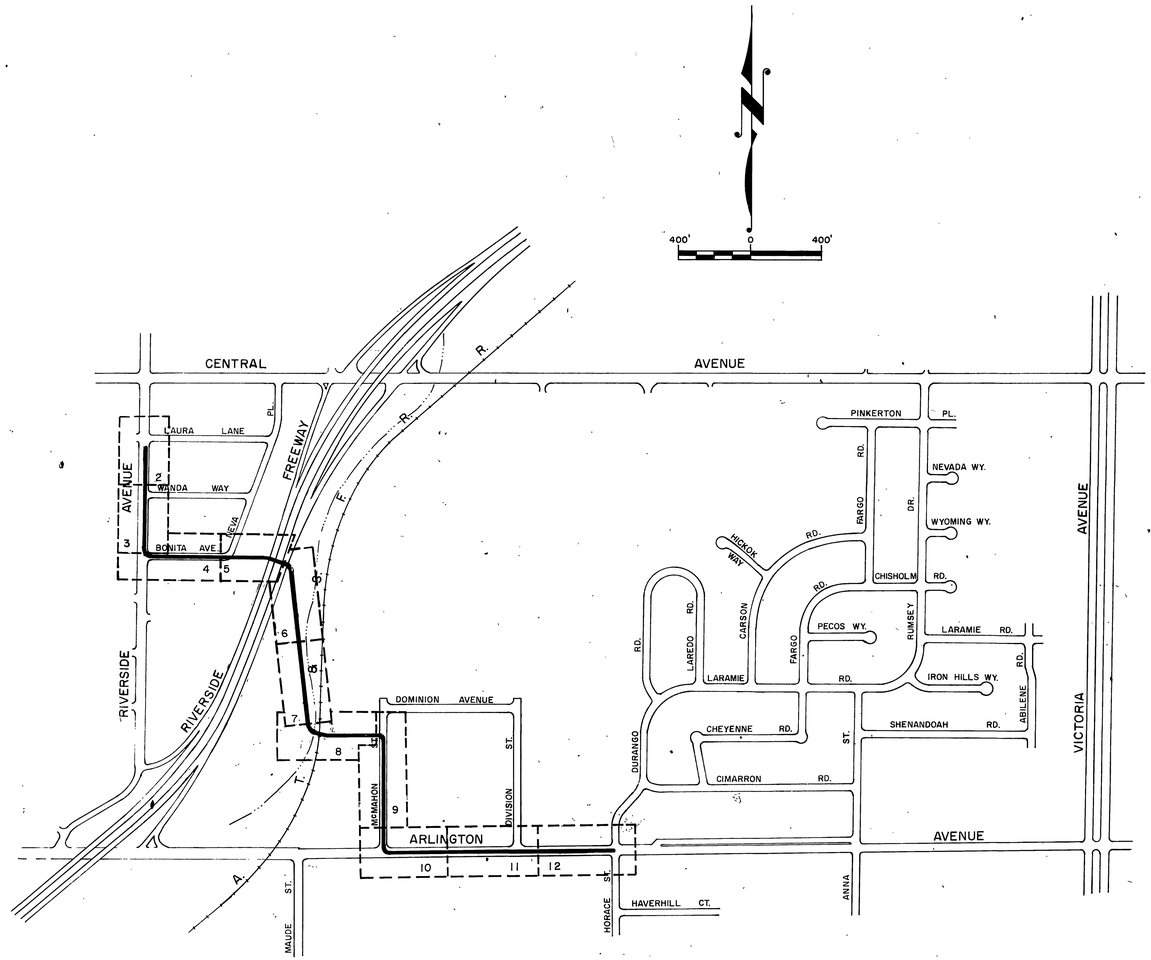

INDEX

	SHEET NO.
COVER SHEET	1
PLAN & PROFILE	2-12
ACCESS STRUCTURE	13
DEWATERING CATCH BASIN	14
SPECIAL CONNECTIONS TO CATCH BASINS	15
CATCH BASIN No. 1	15
MANHOLE FRAME & COVER FOR CATCH BASINS	16
DETAIL OF CATCH BASIN OPENING	16
CATCH BASIN REINFORCEMENT	17
INLET TYPE X	17
LOCAL DEPRESSION No. 2	18
JUNCTION STRUCTURE No. 1	18
JUNCTION STRUCTURE No. 2	19
JUNCTION STRUCTURE No. 3	20
JUNCTION STRUCTURE No. 4	20
MANHOLE No. 2	21
MANHOLE No. 3	21
MANHOLE No. 4	22
MANHOLE FRAME & COVER NON-ROCKING	23
MANHOLE SHAFT FOR CAST PIPE	23
STANDARD DROP STEP	24
TRANSITION STRUCTURE No. 1	24
SINGLE CELL R.C.B. STRUCTURAL DETAILS	25
PIPE BEDDING DETAILS	26
R.C. BOX EXCAVATION & BACKFILL PAY LINES	26
CONCRETE COLLAR FOR PIPE 12 INCHES THROUGH 66 INCHES	27
TIMBER BULKHEADS	27
CONSTRUCTION BARRICADES	28
TRAFFIC CONTROL PLANS	29-35

GENERAL NOTES:

1. ELEVATIONS SHOWN ARE IN FEET ABOVE THE U.S.G.S. MEAN SEA LEVEL DATUM.
2. DIMENSIONS FOR LOCATING CATCH BASINS ARE MEASURED FROM CURB RETURN TO CENTER LINE OF CATCH BASIN, UNLESS OTHERWISE SHOWN.
3. LOCATIONS OF CATCH BASIN CONNECTOR PIPE JUNCTIONS WITH CATCH BASINS AS SHOWN ON THE DRAWINGS ARE SCHEMATIC. IT IS INTENDED THAT SUCH JUNCTIONS BE LOCATED AT THE DOWNSTREAM ENDS OF THE CATCH BASINS, UNLESS OTHERWISE SHOWN. IN ALL CASES THE EXACT LOCATIONS WILL BE DETERMINED IN THE FIELD BY THE ENGINEER TO MEET FIELD CONDITIONS.
4. EXISTING UTILITIES SHALL BE PROTECTED IN PLACE BY THE CONTRACTOR, UNLESS OTHERWISE NOTED.
5. LOCATIONS SHOWN ON THE PLANS FOR EXISTING SANITARY SEWER HOUSE CONNECTIONS ARE APPROXIMATE ONLY.
6. ALL OPENINGS RESULTING FROM THE CUTTING OR PARTIAL REMOVAL OF EXISTING CULVERTS, PIPES OR SIMILAR STRUCTURES SHALL BE SEALED WITH 8 INCHES OF BRICK AND MORTAR OR 6 INCHES OF CONCRETE, UNLESS OTHERWISE SHOWN.
7. ALL CURBS, GUTTERS, SIDEWALKS, DRIVEWAYS AND OTHER IMPROVEMENTS SHALL BE RECONSTRUCTED TO THEIR ORIGINAL GRADE, ELEVATION AND LOCATION UNLESS OTHERWISE NOTED.
8. FOR RIGHT OF WAY DATA REFER TO RECORD OF SURVEY BOOK 58 PAGES 64 & 65.
9. SOIL TEST BORINGS FOR THIS PROJECT WERE MADE JAN. 1972.
10. PIPE CONNECTIONS TO MAIN LINE SHALL CONFORM TO STANDARD DRAWINGS JS No. 3 AND JS No. 4 UNLESS OTHERWISE SHOWN.

AS BUILT
PROJECT NO. 1-0-193

1970 STORM DRAIN BOND ISSUE PROJECT No. 11

RIVERSIDE COUNTY FLOOD CONTROL AND WATER CONSERVATION DISTRICT

MAGNOLIA CENTER STORM DRAIN STAGE III
MAP & GENERAL NOTES
ABBREVIATIONS & LEGEND

Approved Arthur W. Bryant Chief Engineer R.E. No 8822	Designed: A.P.	Sheet No 1 of
	Drawn: D.J.	
	Checked: J.H. & D.M.M.	Dwg. No 1-266
Date: 5-26-72	Date Drawn: 5-7-1971	

D-245

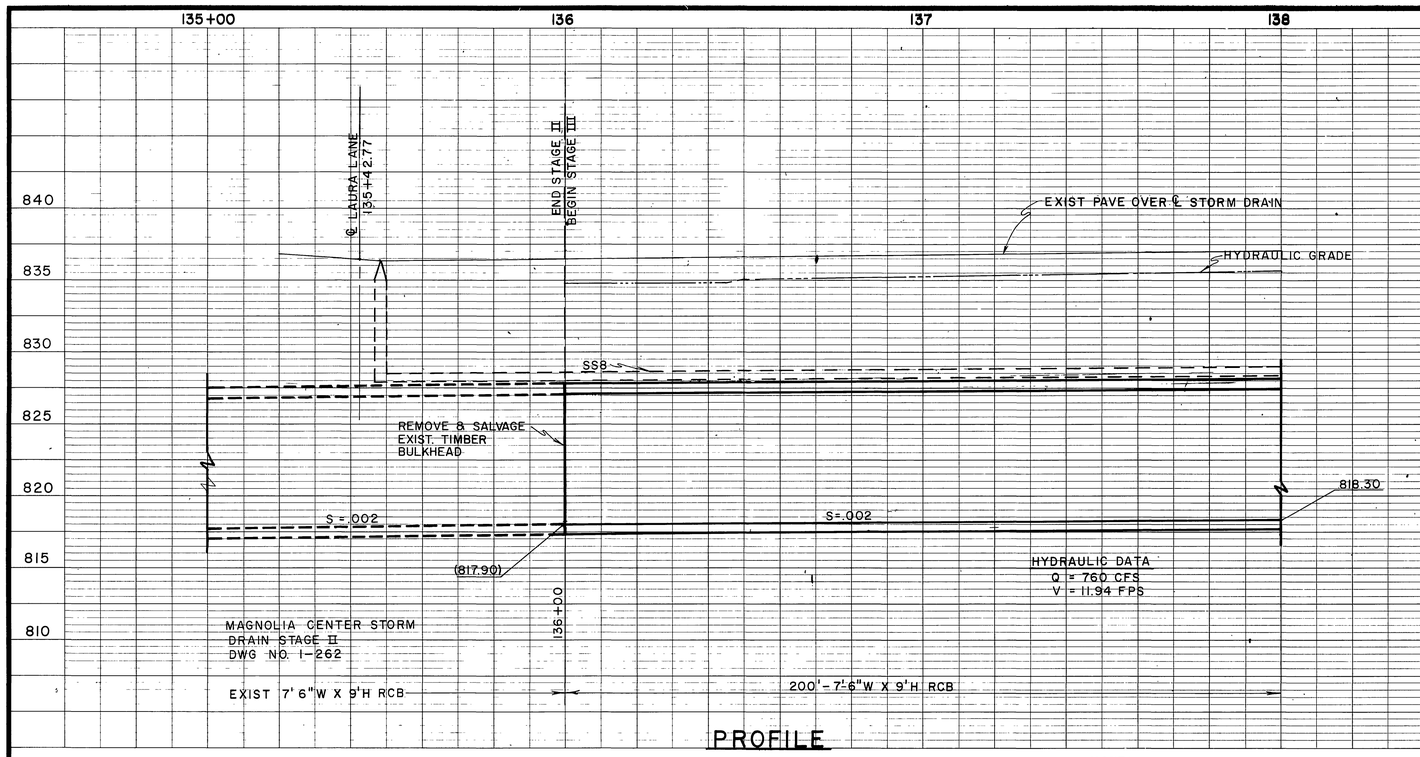

PROFILE

MAIN LINE SUMMARY

BEGINNING STATION 136+00

TO STATION	LENGTH FT.	PROPOSAL I	PROPOSAL II
147+94.25	1194.25	7'-6"W x 9'-0"H RCB	
148+05.75	11.50	ACCESS STRUCTURE	
150+51.25	245.50	87"RCP 1850-D JACK 167'	
150+64.12	12.87	M.H. No. 4	T.S. No. 1, J.S. No. 1, M.H. No. 3
154+60.00	395.88	84" RCP 1450-D	5'-10"W x 7'-0"H RCB
159+50.00	490.00	84" RCP 1400-D	5'-10"W x 7'-0"H RCB
159+60.00	10.00	84" RCP 1400-D	T.S. No. 1
161+69.00	209.00	84" RCP 3000-D	JACK 84'
161+79.00	10.00	84" RCP 1400-D	T.S. No. 1
168+99.37	720.37	84" RCP 1400-D	5'-10"W x 7'-0"H RCB
169+16.24	16.87	M.H. No. 4	T.S. No. 1, J.S. No. 1, M.H. No. 3
176+54.43	738.19	78" RCP 1200-D	
176+66.70	12.27	M.H. No. 4	
181+58.10	491.40	72" RCP 1250-D	
181+74.77	16.67	M.H. No. 4	
182+61.49	86.72	60" RCP 1400-D	

NOTE:

1. PROTECT 8" HIGH PRESSURE GAS MAIN SUPPLY LINE PHONE 682-1660 BEFORE TRENCHING:
   DISTRIBUTION DISPATCHER
   SO. CALIF. GAS CO.
   3700 CENTRAL AVE.
   RIVERSIDE, CALIF.
2. 30" WATER. PHONE BILL JENSEN 787-7519 BEFORE TRENCHING. CALL 787-7511 FOR EMERGENCY.

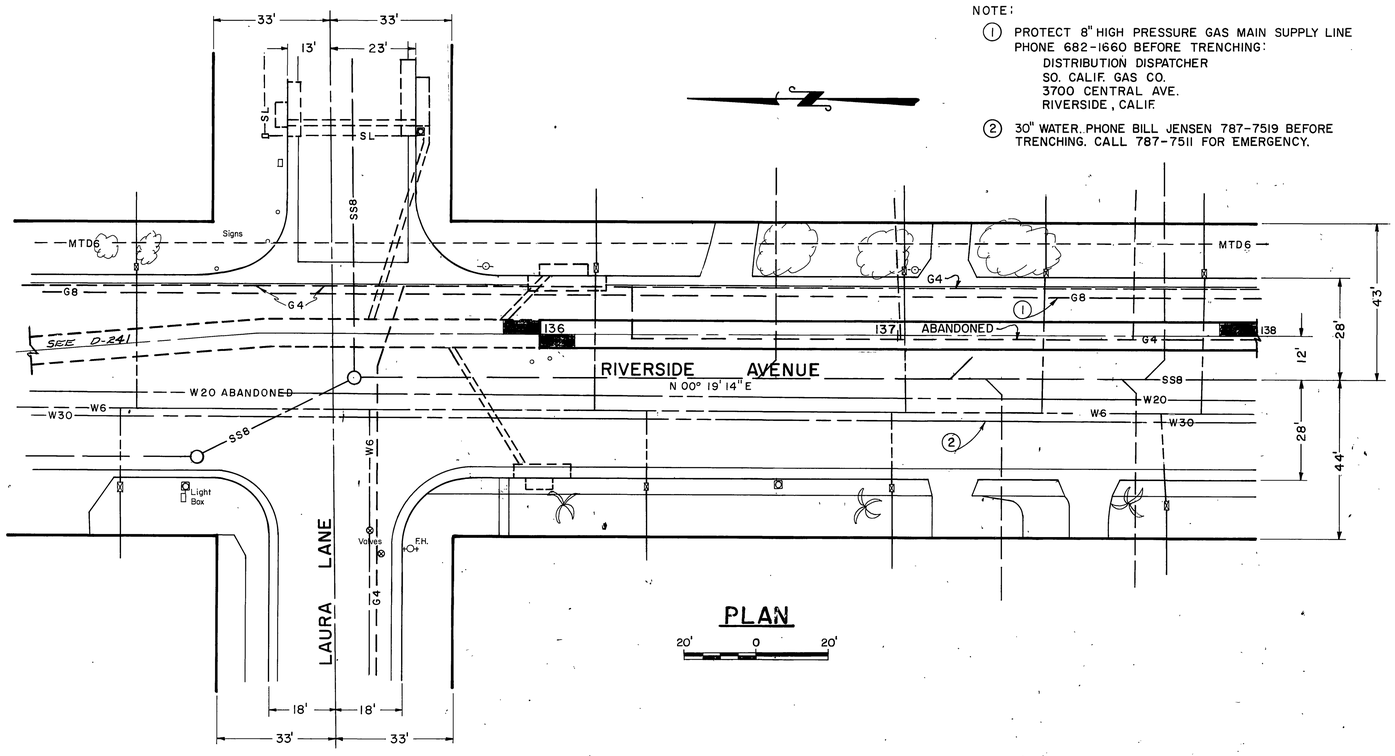

PLAN

20' 0 20'

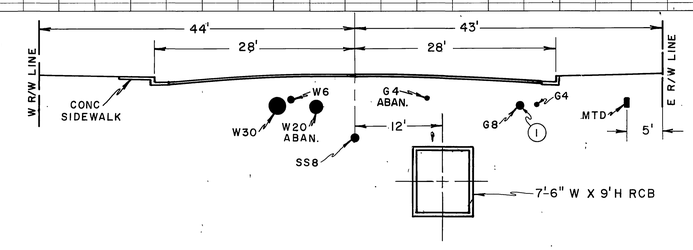

CROSS SECTION

STA. 138+00

10' 0 10'

RESURFACING SCHEDULE		
STREET	AC	CLASS 3 BASE
ARLINGTON	5"	10"
MC MAHON	3-1/2"	7-1/2"
DIVISION	3-1/2"	7-1/2"
BONITA	2-1/2"	8"
RIVERSIDE	4-1/2"	8"
DURANGO	3-1/2"	7-1/2"

REFERENCE	DESCRIPTION	APPROVED	DATE
	No Change		12-12-72

REVISIONS

AS BUILT

1970 STORM DRAIN BOND ISSUE PROJECT No. 11

RIVERSIDE COUNTY FLOOD CONTROL AND WATER CONSERVATION DISTRICT

MAGNOLIA CENTER STORM DRAIN STAGE III

PLAN & PROFILE
STA. 136+00 TO STA. 138+00

PROJECT NO. 1-0-193

Approved: John M. Bryant, Chief Engineer R.E. No. 8822
Date: 5-26-72

Designed: A.P.
Drawn: D.J.
Checked: J.H. & D.M.M.
Date Drawn: 10-18-71

Sheet No. 2 of
Dwg. No. 1-266

D-245

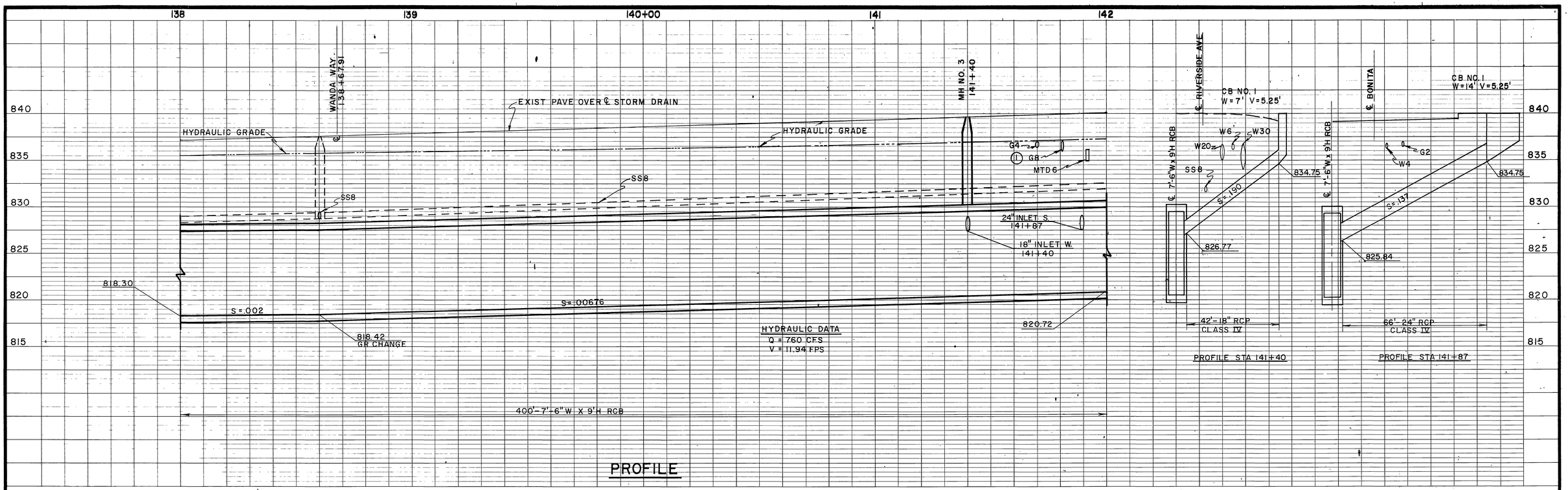

PROFILE

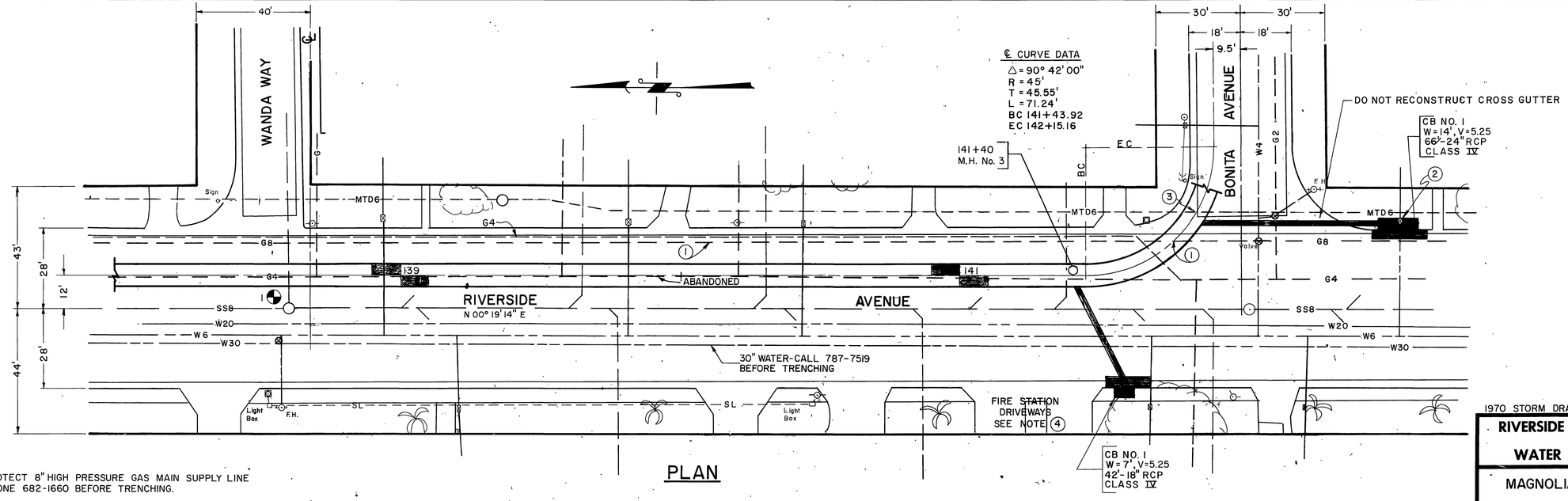

PLAN

NOTES:

1. PROTECT 8" HIGH PRESSURE GAS MAIN SUPPLY LINE PHONE 682-1660 BEFORE TRENCHING.
2. RELOCATE WATER METER & SERVICE.
3. TELEPHONE CABLE CALL 684-0071 BEFORE TRENCHING.
4. ACCESS FOR FIRE FIGHTING EQUIPMENT SHALL BE MAINTAINED AT ALL TIMES FOR FIRE DEPARTMENT STATION HOUSE No. 3. FIRE FIGHTING EQUIPMENT SHALL HAVE ACCESS TO CENTRAL AVE. VIA RIVERSIDE AVE. OR BONITA AVE.-NEVA PL. AT ALL TIMES. FIRE FIGHTING EQUIPMENT ACCESS SOUTH BOUND ON RIVERSIDE AVE. SHALL BE MAINTAINED AT ALL TIMES.

REFERENCE	DESCRIPTION	APPROVED	DATE
	No Change		12-12-72

REVISIONS

AS BUILT

1970 STORM DRAIN BOND ISSUE PROJECT No. 11

RIVERSIDE COUNTY FLOOD CONTROL AND WATER CONSERVATION DISTRICT

MAGNOLIA CENTER STORM DRAIN
STAGE III

PLAN & PROFILE
STA. 138+00 TO STA. 142+00

PROJECT NO. 1-0-193

Approved: Chief Engineer R.E. No. 8822	Designed: A.P.	Sheet No. 3 of
	Drawn: D.J.	
	Checked: J.H. & D.M.M.	Dwg. No. 1-266
Date: 5-26-72	Date Drawn: 6-18-71	

D-245

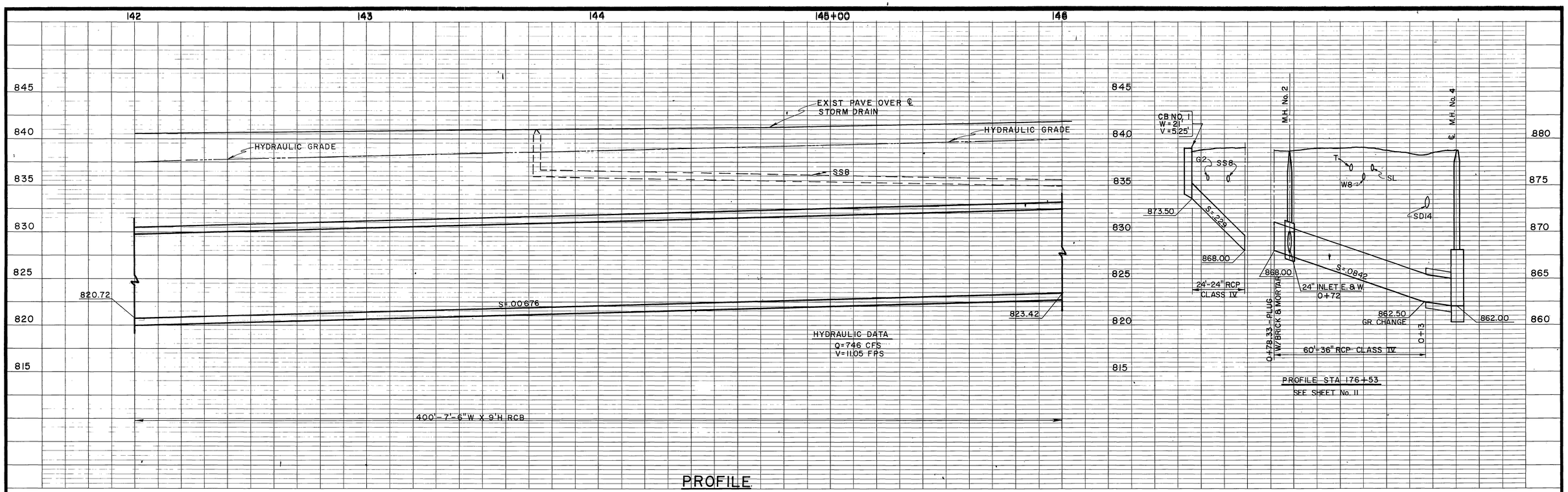

PROFILE

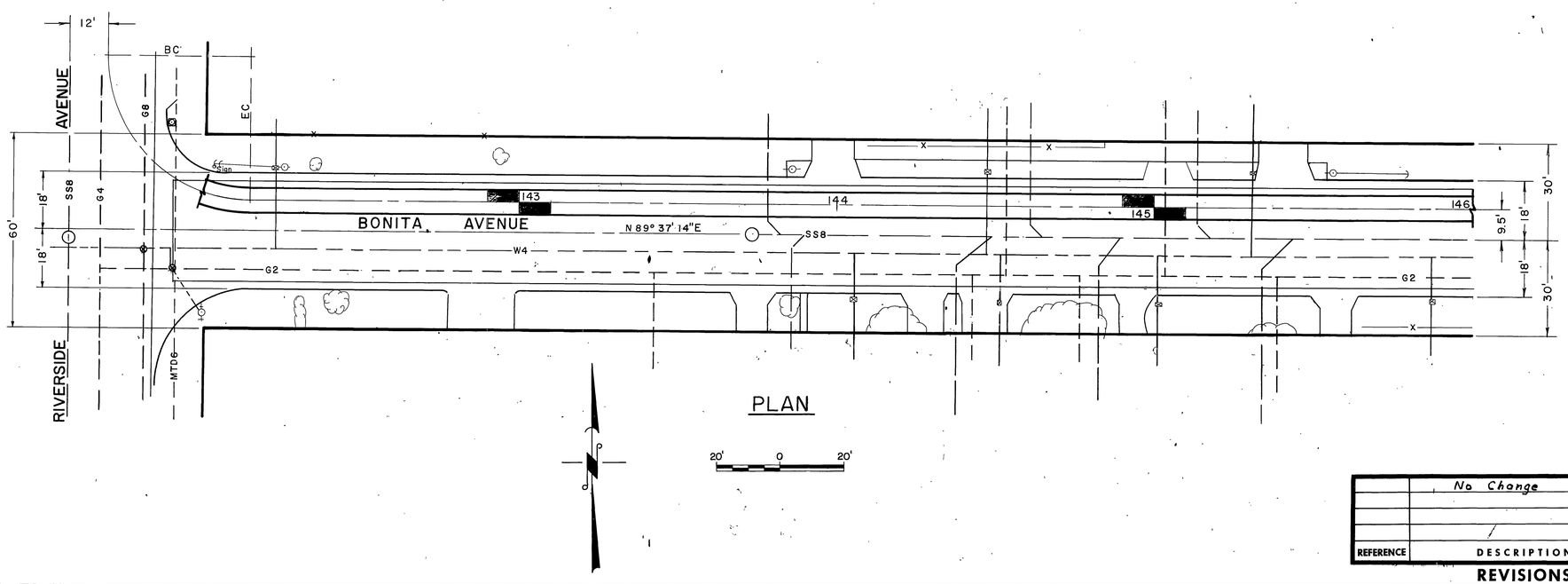

PLAN

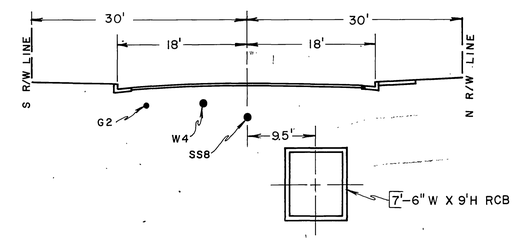

CROSS SECTION

STA 144+75

10' 0 10'

REFERENCE	DESCRIPTION	APPROVED	DATE
	No Change		12-12-71

REVISIONS

AS BUILT

1970 STORM DRAIN BOND ISSUE PROJECT No. II

RIVERSIDE COUNTY FLOOD CONTROL AND WATER CONSERVATION DISTRICT

MAGNOLIA CENTER STORM DRAIN
STAGE III

PLAN & PROFILE
STA. 142+00 TO STA. 146+00

PROJECT NO. 1-0-193

Approved: Chief Engineer R.E. No. 8822
Date: 5-26-72

Designed: A.P.
Drawn: D.J.
Checked: J.H. & D.M.M.
Date Drawn: 10-27-71

Sheet No. 4 of
Dwg. No. 1-266

D-245

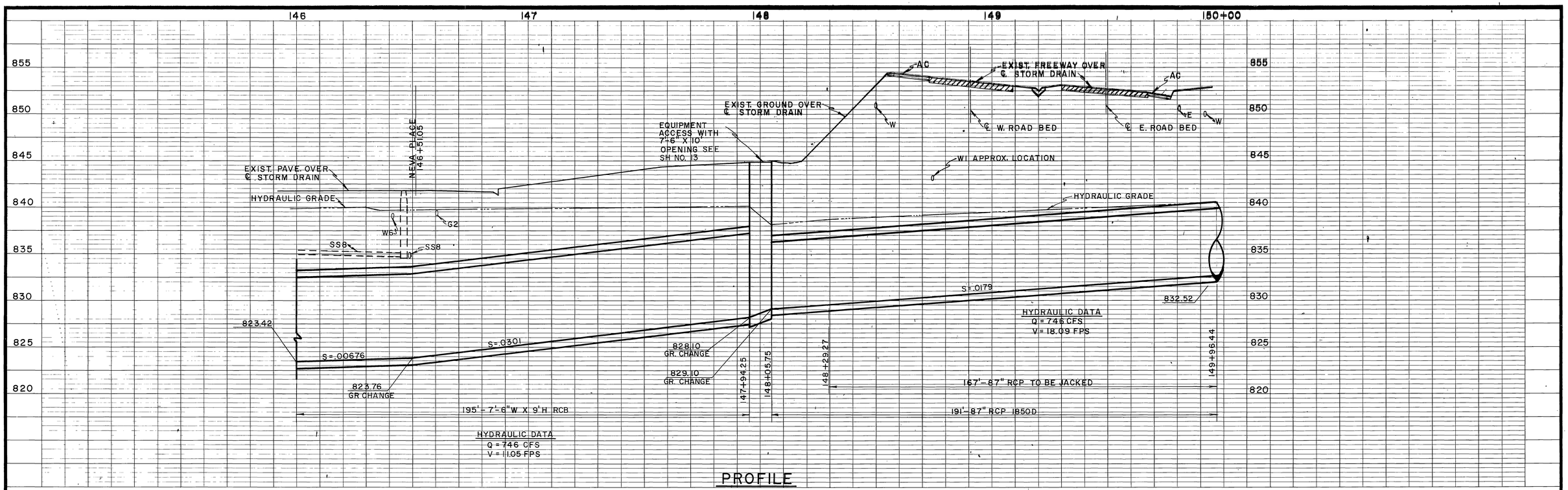

PROFILE

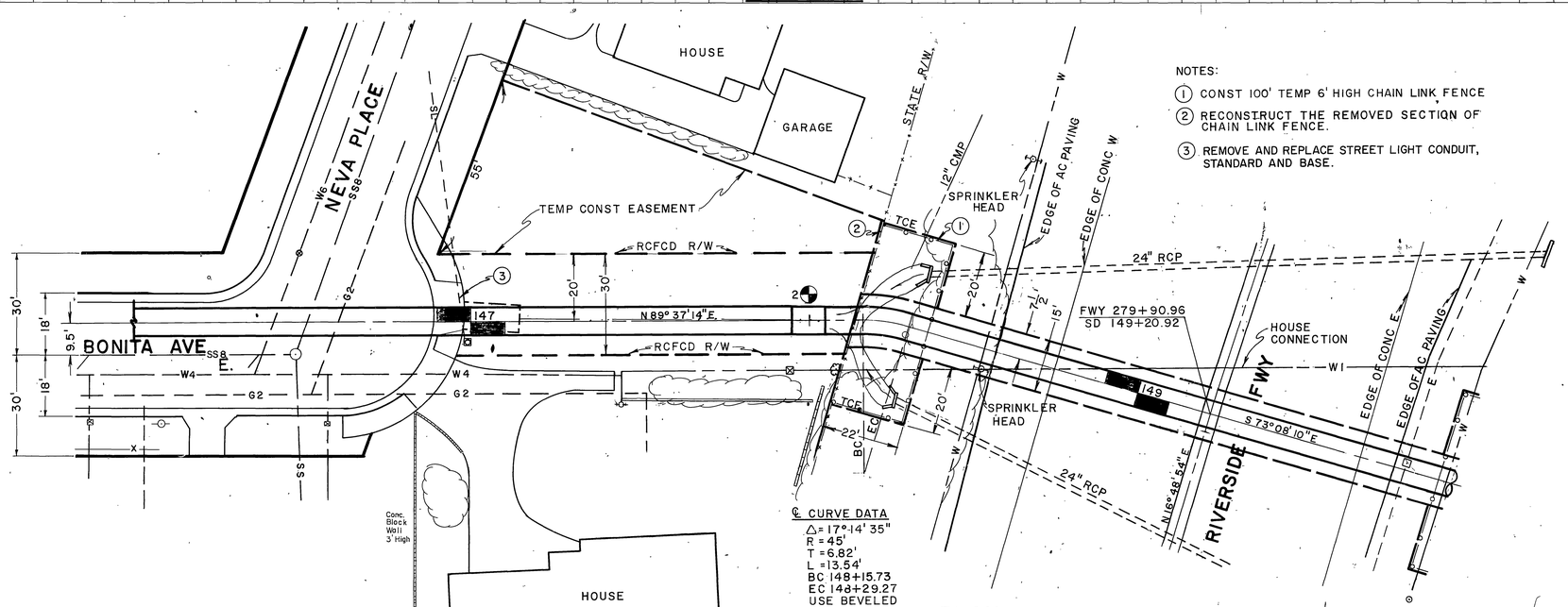

PLAN

NOTES:

1. CONST 100' TEMP 6' HIGH CHAIN LINK FENCE
2. RECONSTRUCT THE REMOVED SECTION OF CHAIN LINK FENCE.
3. REMOVE AND REPLACE STREET LIGHT CONDUIT, STANDARD AND BASE.

REFERENCE	DESCRIPTION	APPROVED	DATE
	No Change		12-12-72

REVISIONS

AS BUILT

1970 STORM DRAIN BOND ISSUE PROJECT No. 11

RIVERSIDE COUNTY FLOOD CONTROL AND WATER CONSERVATION DISTRICT

MAGNOLIA CENTER STORM DRAIN
STAGE III

PLAN & PROFILE
STA. 146+00 TO STA. 149+96.44

PROJECT NO. 1-0-193

Approved: Chief Engineer R.E. No. 8822
Date: 5-26-72

Designed: A.P.
Drawn: D.J.
Checked: J.H. & D.M.M.
Date Drawn: 10-27-71

Sheet No. 5 of
Dwg. No. 1-266

D-245

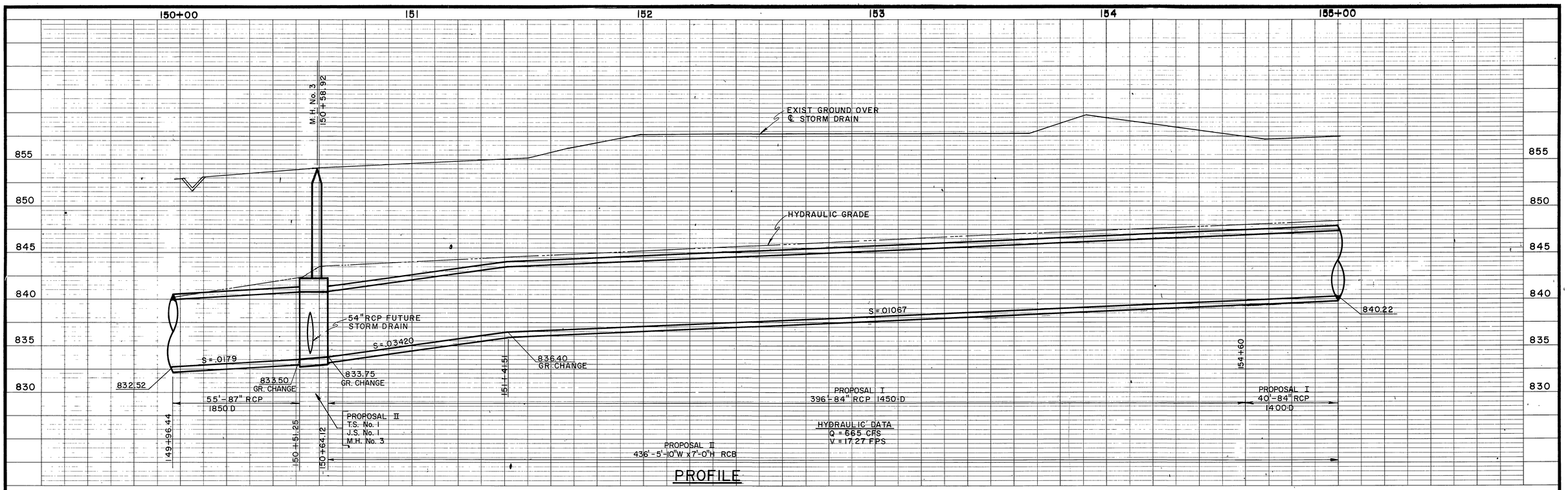

PROFILE

NOTES:

1. PLACE 4' OF 54" RCP 1750-D AT S=.002 AND PLACE TIMBER BULKHEAD.
2. PROPOSAL I
   STA. 150+52.72
   M.H. No. 4
   A = 45°
   B = 54"
   C = 10.6'
   D_2 = 87", D_1 = 84"
   E = 11.82'
   L = 13.70'
   EL. R = 834.02
   EL. S = 834.00

   PROPOSAL II
   STA. 150+51.25
   J.S. No. 1
   A = 45°
   B = 54"
   C = 9.18'
   EL. R = 834.02
   EL. S = 834.00
3. RECONSTRUCT DAMAGED PORTIONS OF MORTAR LINED DITCH.
4. RECONSTRUCT EXISTING FREEWAY FENCE.
5. CONSTRUCT 165' TEMP. 6' HIGH CHAIN LINK FENCE.

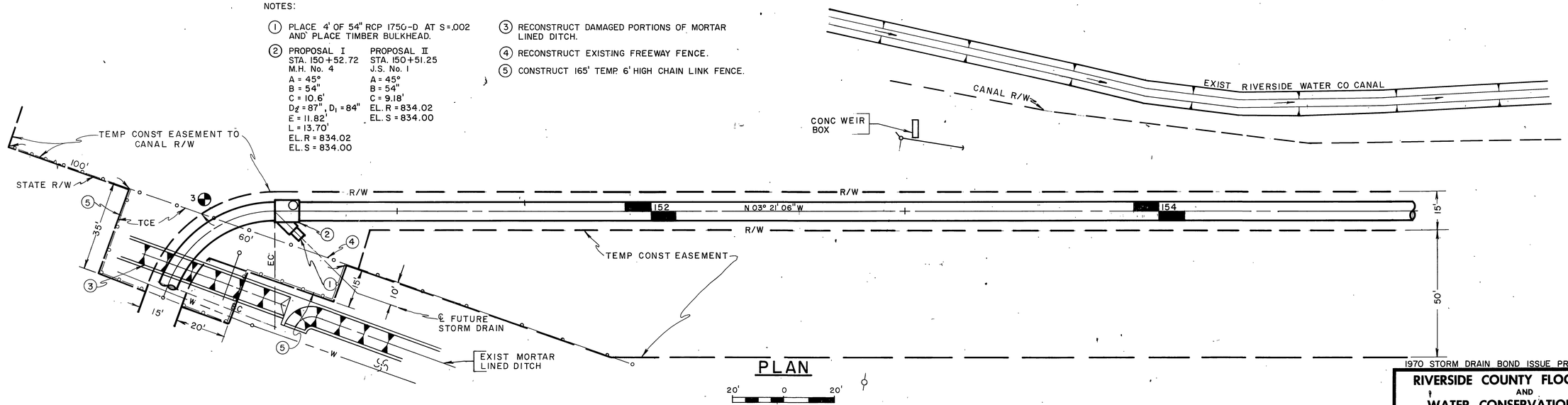

PLAN

℄ CURVE DATA
△ = 69° 47' 05"
R = 45'
T = 31.38'
L = 54.81'
BC = 149+96.44
EC = 150+51.25
USE BEVELED PIPE

REFERENCE	DESCRIPTION	APPROVED	DATE
	No Change		12-12-74

REVISIONS

AS BUILT

1970 STORM DRAIN BOND ISSUE PROJECT No. 11

RIVERSIDE COUNTY FLOOD CONTROL AND WATER CONSERVATION DISTRICT

MAGNOLIA CENTER STORM DRAIN
STAGE III
PLAN & PROFILE
STA 149+96.44 TO STA 155+00

PROJECT NO. 1-0-193

Approved: John H. Bryant, Chief Engineer R.E. No. 8822
Date: 5-26-72

Designed: A.P.
Drawn: D.J.
Checked: J.H. & D.M.M.
Date Drawn: 10-13-71

Sheet No. 6 of
Dwg. No. 1-266

D-245

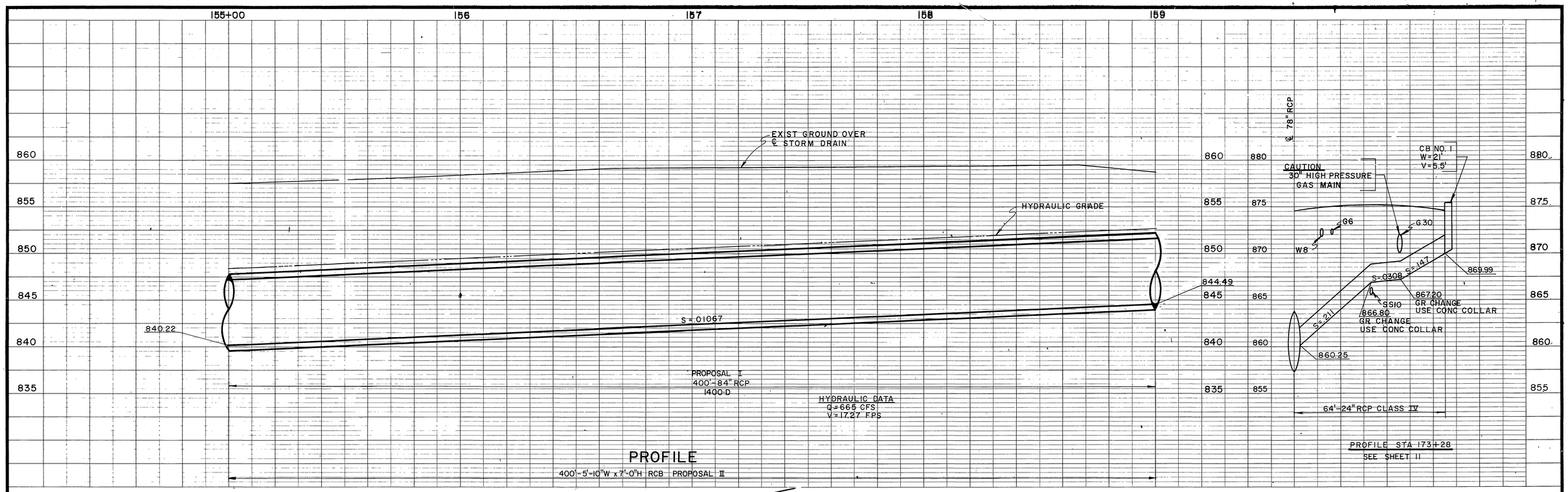

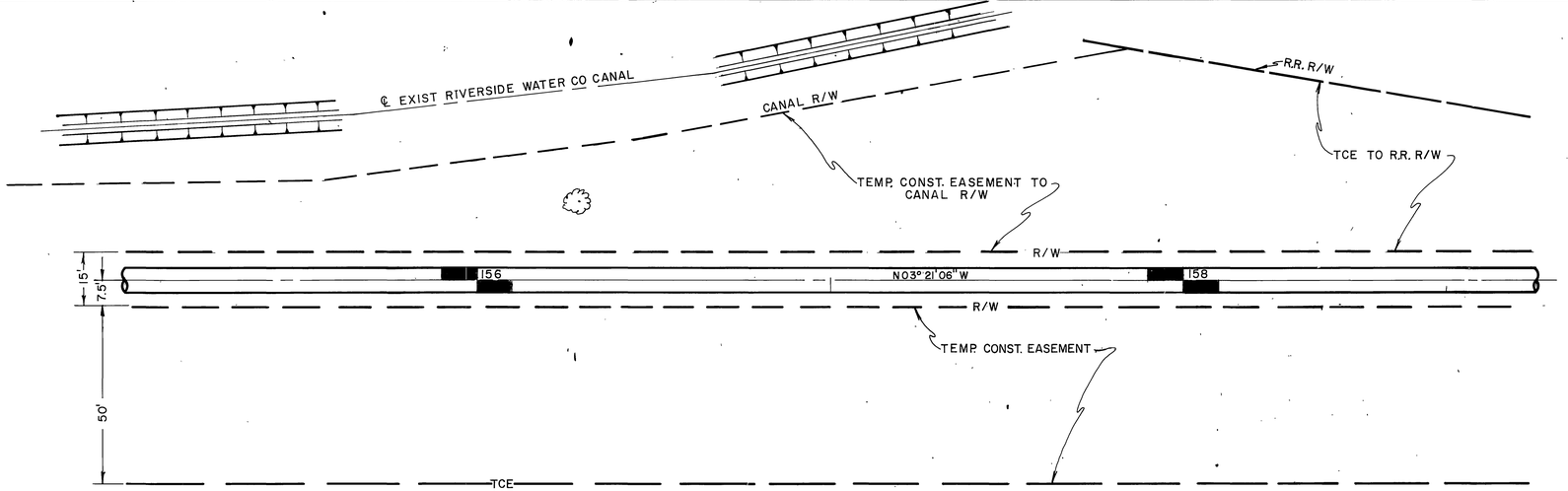

PLAN

20' 0 20'

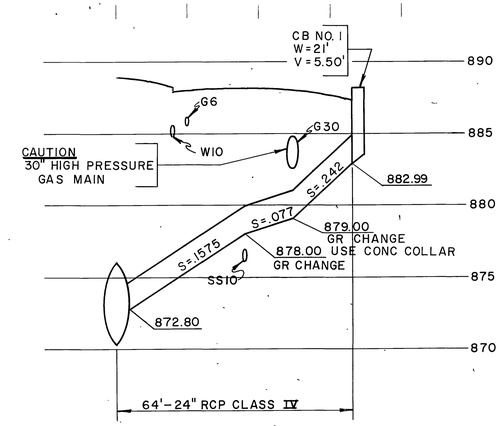

1970 STORM DRAIN BOND ISSUE PROJECT No. 11

REFERENCE	DESCRIPTION	APPROVED	DATE
	No Change		12-12-72

REVISIONS
AS BUILT

RIVERSIDE COUNTY FLOOD CONTROL AND WATER CONSERVATION DISTRICT

MAGNOLIA CENTER STORM DRAIN
STAGE III

PLAN & PROFILE
STA 155+00 TO STA 159+00

PROJECT NO. 1-0-193

Approved: John W. Bryant
Chief Engineer R.E. No. 8822
Date: 5-26-72

Designed: A.P.
Drawn: D.J.
Checked: J.H. & D.M.M.
Date Drawn: 10-14-71

Sheet No. 7 of
Dwg. No. 1-266

D-245

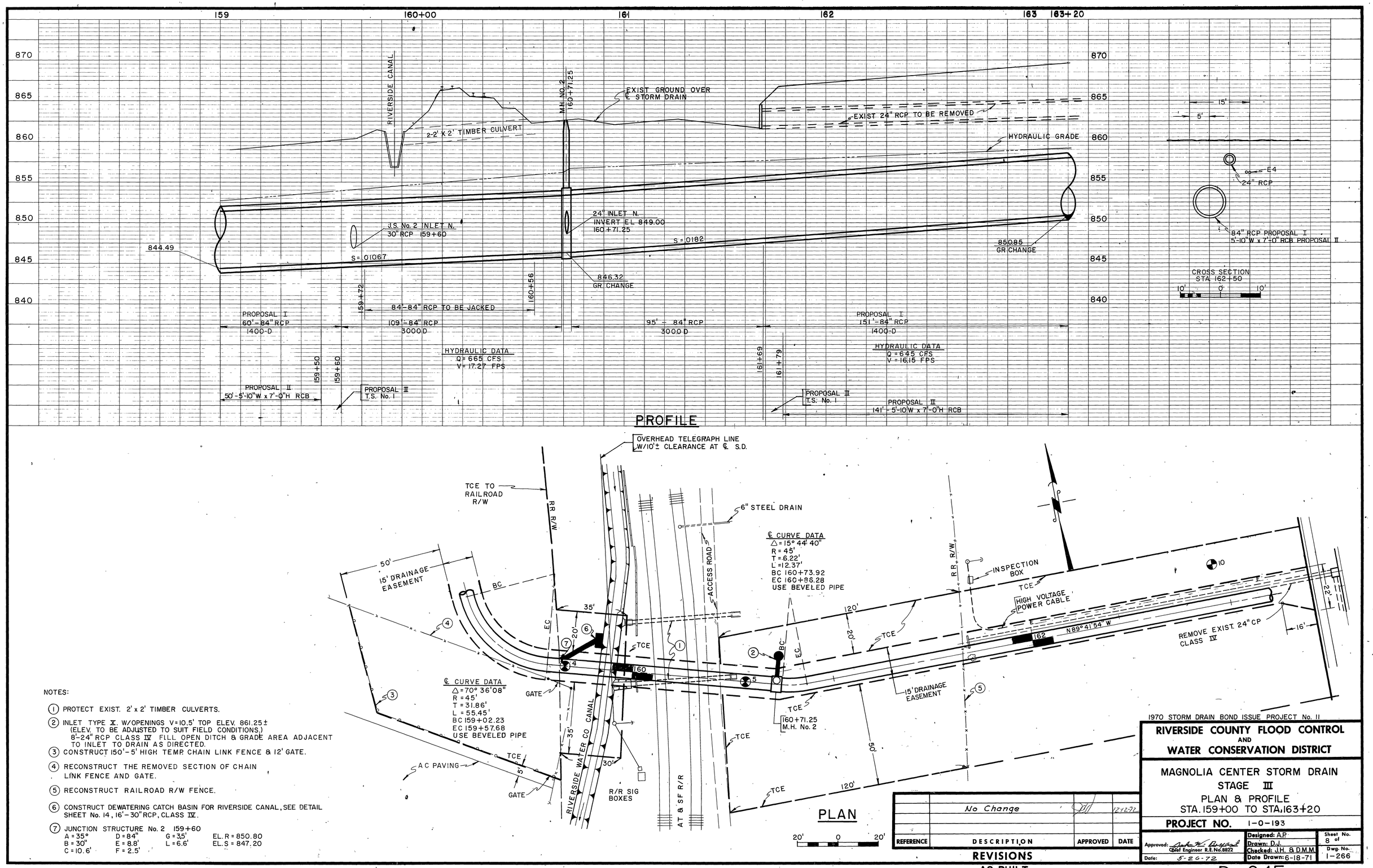

NOTES:

1. PROTECT EXIST. 2' x 2' TIMBER CULVERTS.
2. INLET TYPE X. W/OPENINGS V=10.5' TOP ELEV. 861.25± (ELEV. TO BE ADJUSTED TO SUIT FIELD CONDITIONS.) 8-24" RCP CLASS IV FILL OPEN DITCH & GRADE AREA ADJACENT TO INLET TO DRAIN AS DIRECTED.
3. CONSTRUCT 150'-5' HIGH TEMP. CHAIN LINK FENCE & 12' GATE.
4. RECONSTRUCT THE REMOVED SECTION OF CHAIN LINK FENCE AND GATE.
5. RECONSTRUCT RAILROAD R/W FENCE.
6. CONSTRUCT DEWATERING CATCH BASIN FOR RIVERSIDE CANAL, SEE DETAIL SHEET No. 14, 16'-30" RCP, CLASS IV.
7. JUNCTION STRUCTURE No. 2 159+60
   A = 35° D = 84" G = 3.5' EL. R = 850.80
   B = 30" E = 8.8' L = 6.6' EL. S = 847.20
   C = 10.6' F = 2.5'

REFERENCE	DESCRIPTION	APPROVED	DATE
	No Change		12-12-72

REVISIONS

AS BUILT

1970 STORM DRAIN BOND ISSUE PROJECT No. 11

RIVERSIDE COUNTY FLOOD CONTROL AND WATER CONSERVATION DISTRICT

MAGNOLIA CENTER STORM DRAIN
STAGE III
PLAN & PROFILE
STA. 159+00 TO STA. 163+20

PROJECT NO. 1-0-193

Approved: Chief Engineer R.E. No. 8822
Date: 5-26-72

Designed: A.P.
Drawn: D.J.
Checked: J.H. & D.M.M.
Date Drawn: 6-18-71

Sheet No. 6 of
Dwg. No. 1-266

D-245

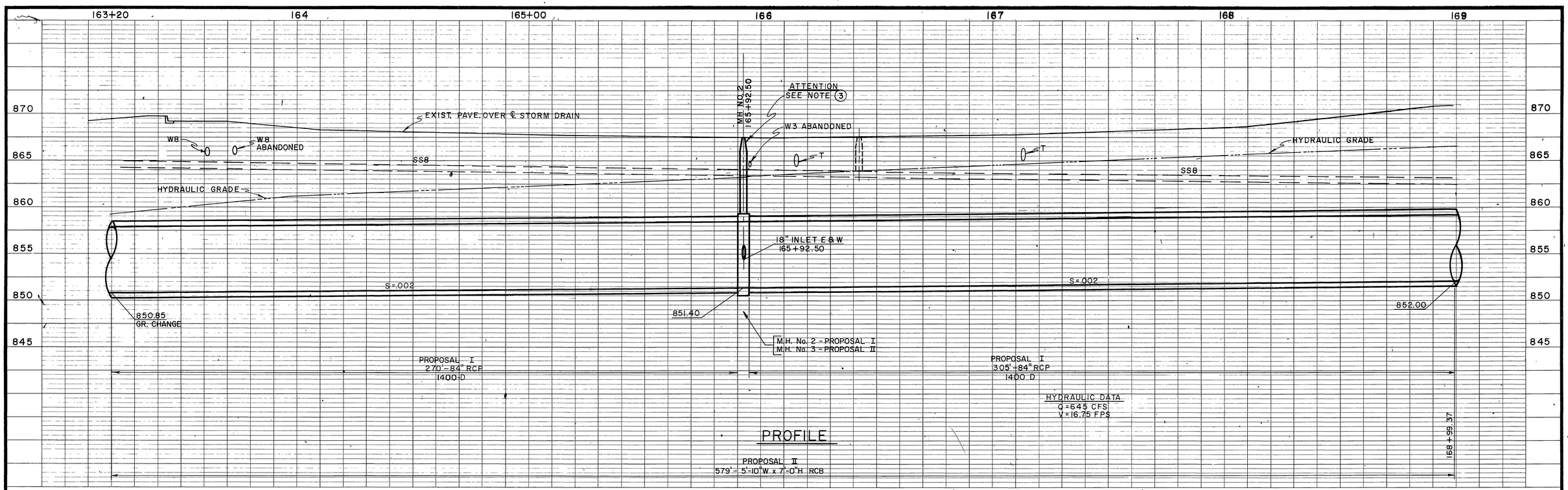

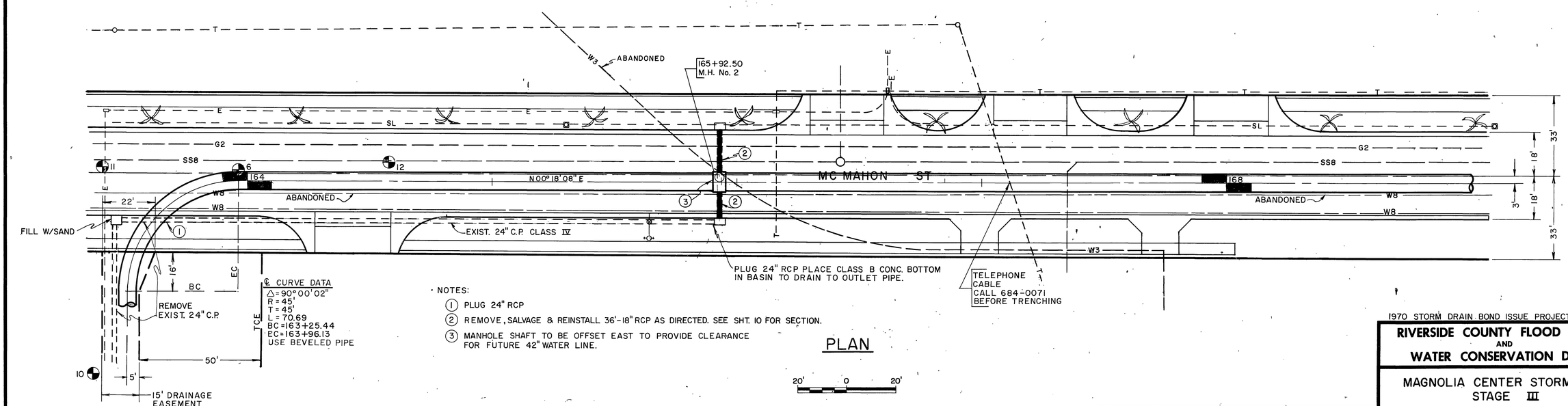

NOTES:

1. PLUG 24" RCP
2. REMOVE, SALVAGE & REINSTALL 36'-18" RCP AS DIRECTED. SEE SHT. 10 FOR SECTION.
3. MANHOLE SHAFT TO BE OFFSET EAST TO PROVIDE CLEARANCE FOR FUTURE 42" WATER LINE.

REFERENCE	DESCRIPTION	APPROVED	DATE
	No Change		12-12-72

REVISIONS
AS BUILT

1970 STORM DRAIN BOND ISSUE PROJECT No. II

RIVERSIDE COUNTY FLOOD CONTROL AND WATER CONSERVATION DISTRICT

MAGNOLIA CENTER STORM DRAIN
STAGE III

PLAN & PROFILE
STA. 163+20 TO STA. 169+00

PROJECT NO. 1-0-193

Approved: Chief Engineer R.E. No. 8822
Date: 5-26-72

Designed: A.P.
Drawn: D.J.
Checked: J.H. & D.M.M.
Date Drawn: 10-26-71

Sheet No. 9 of
Dwg. No. 1-266

D-245

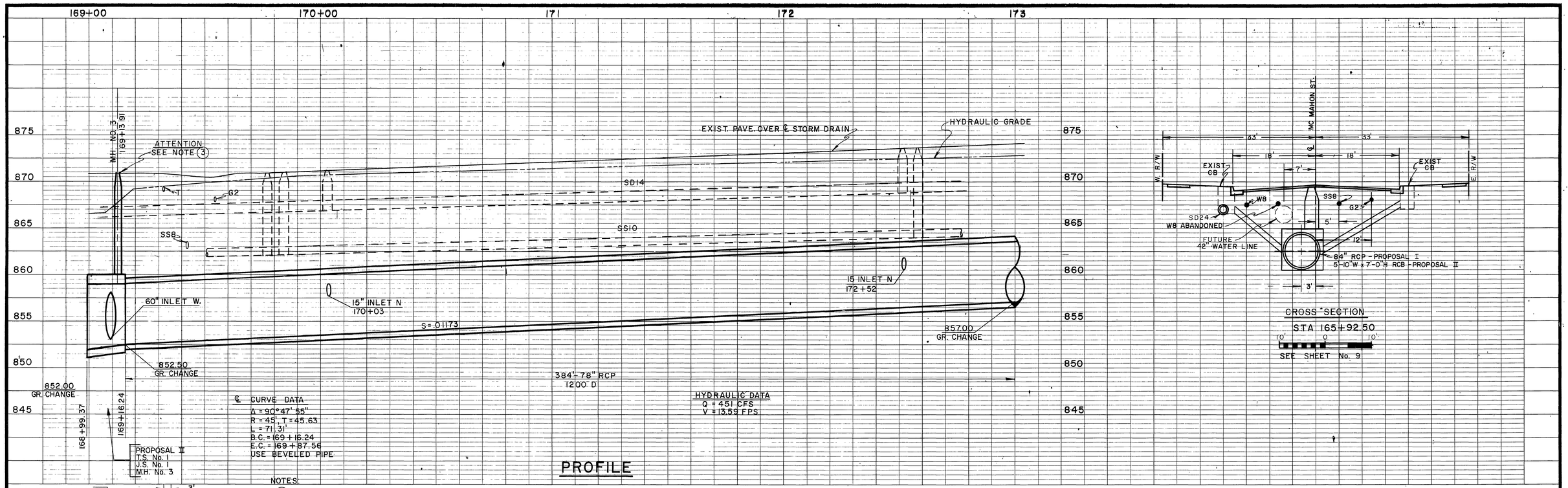

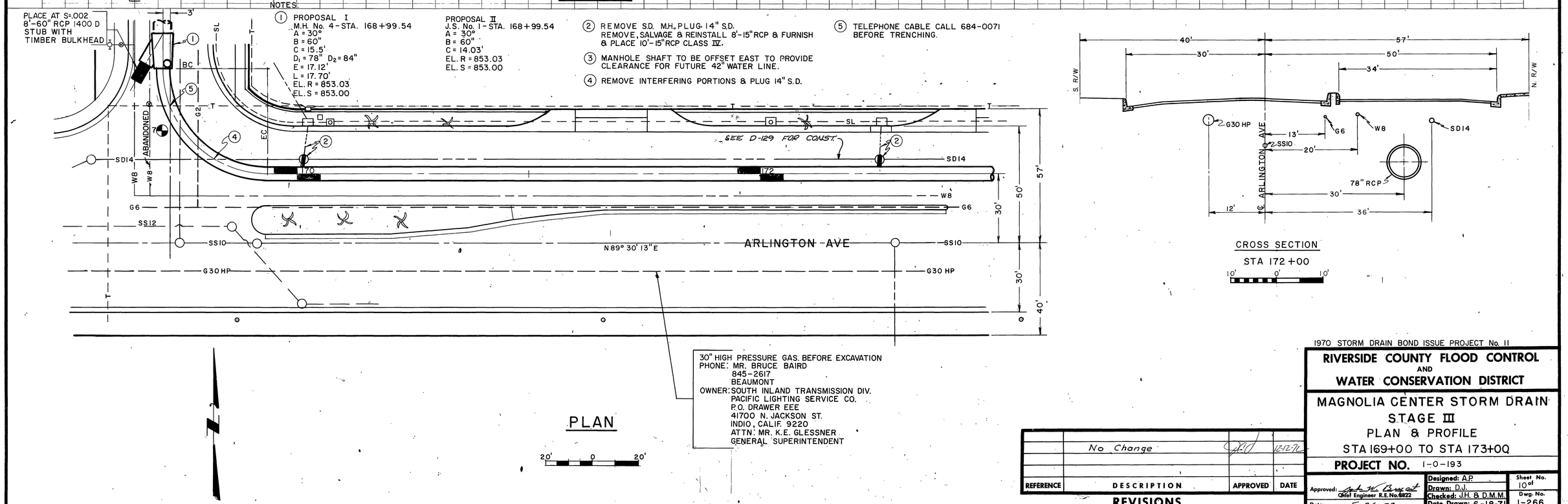

1970 STORM DRAIN BOND ISSUE PROJECT No. 11

RIVERSIDE COUNTY FLOOD CONTROL AND WATER CONSERVATION DISTRICT

MAGNOLIA CENTER STORM DRAIN
STAGE III
PLAN & PROFILE
STA 169+00 TO STA 173+00

PROJECT NO. 1-0-193

REFERENCE	DESCRIPTION	APPROVED	DATE
	No Change		12-12-72

REVISIONS
AS BUILT

Approved: Chief Engineer R.E. No. 8822
Date: 5-26-72

Designed: A.P.
Drawn: D.J.
Checked: J.H. & D.M.M.
Date Drawn: 6-18-71

Sheet No. 10 of
Dwg. No. 1-266

D-245

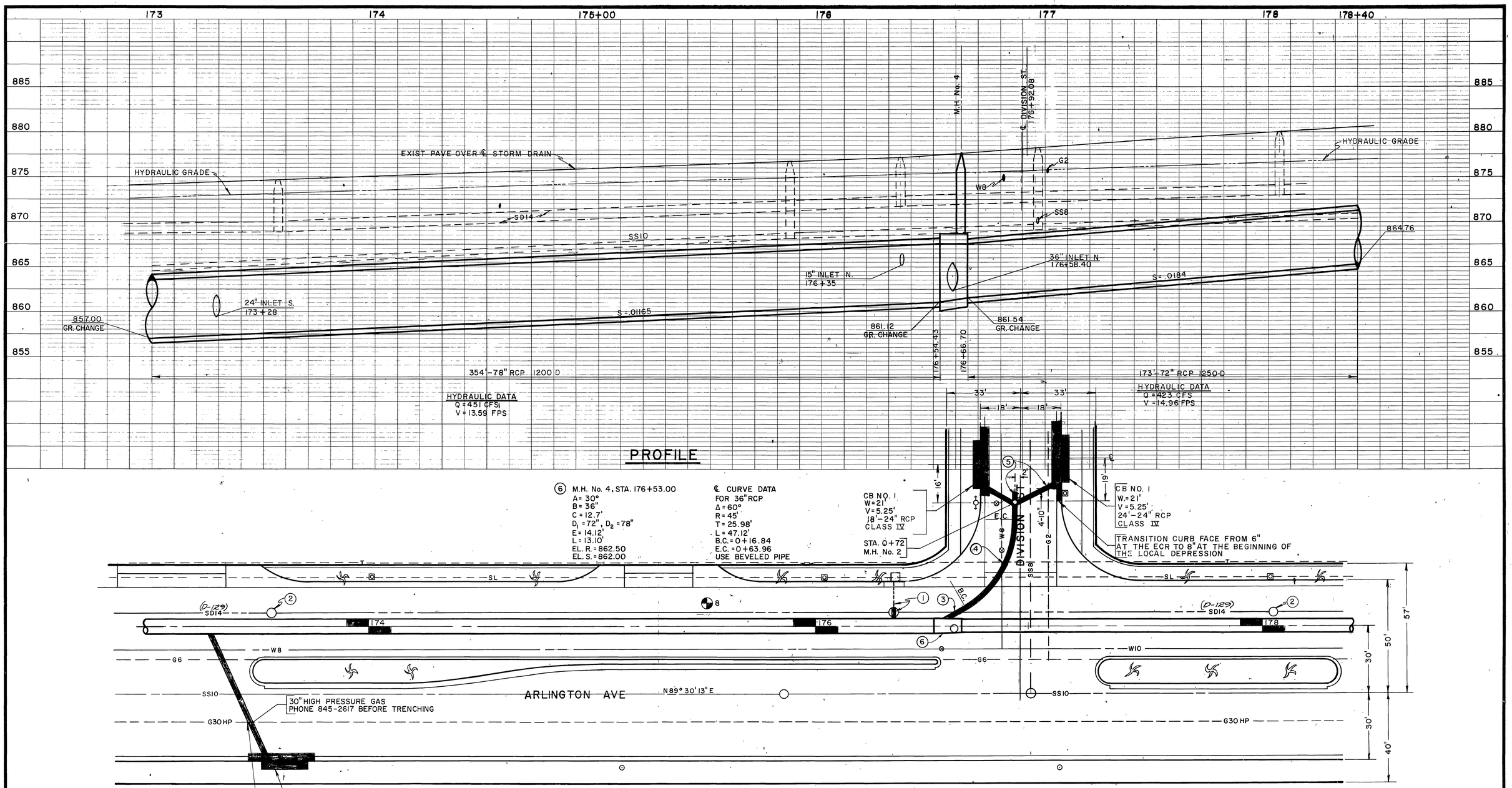

NOTE:

1. REMOVE S.D. M.H., PLUG 14" S.D. REMOVE, SALVAGE & REINSTALL 8'-15" RCP & FURNISH & PLACE 10'-15" RCP CLASS IV AS DIRECTED.
2. REMOVE S.D. MH. AND PLUG 14" S.D.
3. REMOVE INTERFERING PORTIONS AND PLUG 14" SD.
4. TELEPHONE CABLE CALL 684-0071 BEFORE TRENCHING.
5. FOR 36" LATERAL & CONNECTOR PIPE PROFILES SEE SHT. 4.

REFERENCE	DESCRIPTION	APPROVED	DATE
	No Change		12-12-72

REVISIONS

AS BUILT

1970 STORM DRAIN BOND ISSUE PROJECT No. 11

RIVERSIDE COUNTY FLOOD CONTROL AND WATER CONSERVATION DISTRICT

MAGNOLIA CENTER STORM DRAIN
STAGE III
PLAN & PROFILE
STA 173+00 TO STA 178+40

PROJECT NO. 1-0-193

Approved: Chief Engineer R.E. No. 8822
Date: 5-26-72

Designed: A.P.
Drawn: D.J.
Checked: J.H. & D.M.M.
Date Drawn: 6-18-71

Sheet No. 11 of
Dwg. No. 1-266

D-245

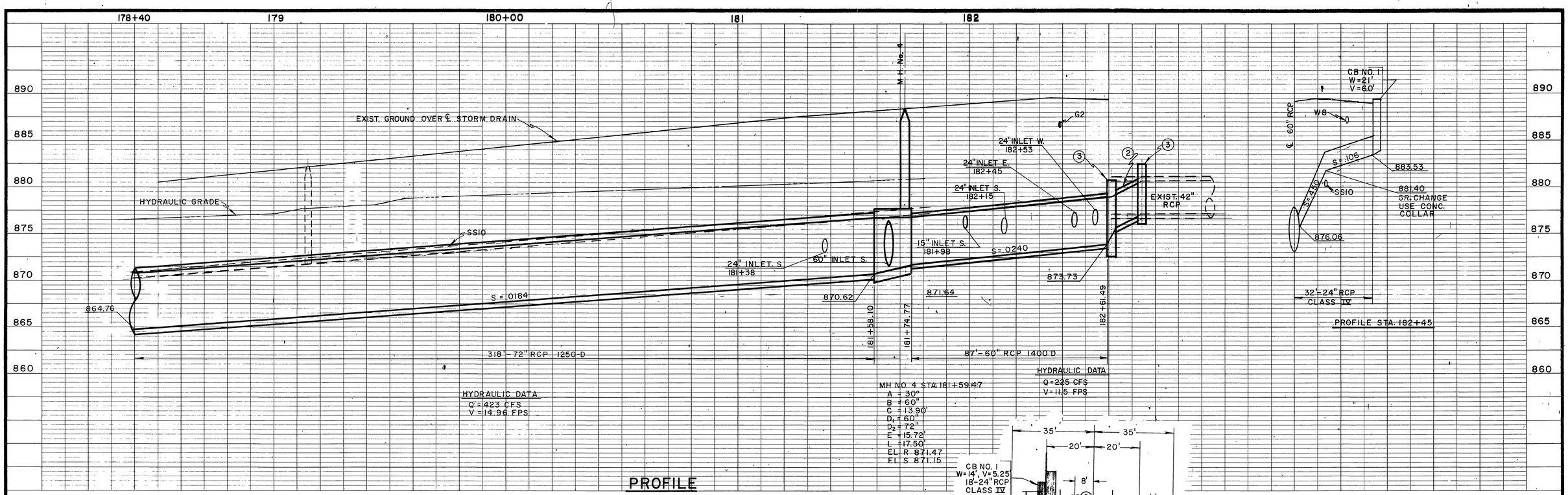

NOTE:

1. REMOVE INTERFERING PORTIONS AND PLUG SD14.
2. REMOVE & RELAY 2 LENGTHS OF EXISTING 42" RCP JOIN 60" RCP.
3. CONST CONCRETE COLLAR.
4. ABANDON EXIST C.B., PLUG SD18, FILL WITH SAND & PLUG WITH MORTAR CURB OPENING
5. REMOVE INTERFERING PORTIONS AND PLUG SD42".
6. REMOVE 12" RCP AND PLACE 12'-15" RCP, CONNECT TO 60" RCP AND RECONSTRUCT EXIST. C.B. BASE AS DIRECTED.

REFERENCE	DESCRIPTION	APPROVED	DATE
1 C1	C.B. Removed pipe eliminated	JCW	12-17-71
ADDENDUM No. 2	RELOCATED 2 C.B. ON N.E. COR. FOR FUT. CURB RELOCATED C.B. TO ELIMINATE GRATE	J.W.B.	6-21-72

REVISIONS
AS BUILT

1970 STORM DRAIN BOND ISSUE
PROJECT No. 11

RIVERSIDE COUNTY FLOOD CONTROL AND WATER CONSERVATION DISTRICT

MAGNOLIA CENTER STORM DRAIN
STAGE III
PLAN & PROFILE
STA 178+40 TO STA 182+61.49

PROJECT NO. 1-0-193

Approved: John K. Bryant
Chief Engineer R.E. No. 8822
Date: 5-26-72

Designed: AP
Drawn: DJ
Checked: JH
Date Drawn: 6-21-71

Sheet No. 12 of
Dwg. No. 1-266

D-245

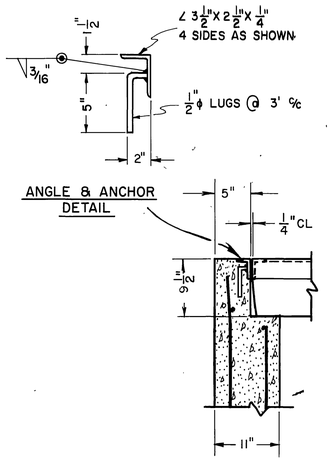

DETAIL E

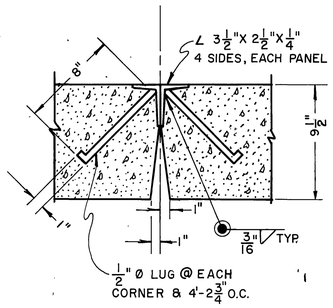

DETAIL F

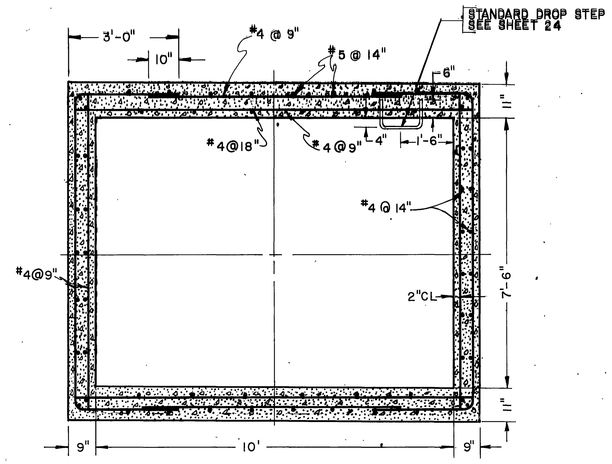

SECTION B-B

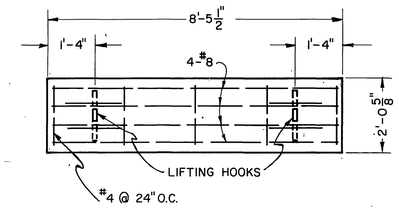

COVER PANEL

GENERAL NOTES, CONCRETE STRUCTURES

1. DIMENSIONS FROM FACE OF CONCRETE ARE TO CENTER OF BAR, UNLESS OTHERWISE SHOWN.
2. CONCRETE DIMENSIONS SHALL BE MEASURED HORIZONTALLY OR VERTICALLY ON THE PROFILE, AND PARALLEL TO OR AT RIGHT ANGLES (OR RADIALLY) TO CENTER LINE OF CONDUIT ON THE PLAN EXCEPT AS OTHERWISE SHOWN.
3. ALL BAR BENDS AND HOOKS SHALL CONFORM TO THE AMERICAN CONCRETE INSTITUTE'S "BUILDING CODE REQUIREMENTS FOR REINFORCED CONCRETE" SECTION 801.
4. PLACING OF REINFORCEMENT SHALL CONFORM TO THE AMERICAN CONCRETE INSTITUTE'S "BUILDING CODE REQUIREMENTS FOR REINFORCED CONC." SECT. 803.
5. TRANSVERSE CONSTRUCTION JOINTS SHALL NOT BE PLACED WITHIN 30 INCHES OF MANHOLE OR JUNCTION STRUCTURE OPENINGS.
6. TRANSVERSE CONSTRUCTION JOINTS IN WALLS AND SLABS SHALL BE IN THE SAME PLANE, NO STAGGERING OF JOINTS WILL BE PERMITTED.
7. THE TRANSVERSE REINFORCING STEEL SHALL TERMINATE 1-1/2 INCHES FROM THE CONC. SURFACES UNLESS OTHERWISE SHOWN ON THE STRUCTURAL DETAILS.
8. EXPOSED EDGES OF CONCRETE MEMBERS SHALL BE ROUNDED OR BEVELED.
9. NO SPLICES IN TRANSVERSE STEEL REINFORCEMENT WILL BE PERMITTED OTHER THAN SHOWN ON THE DRAWING WITHOUT APPROVAL OF THE ENGINEER. NO MORE THAN TWO (2) SPLICES WILL BE PERMITTED IN ANY LONGITUDINAL BAR BETWEEN TRANSVERSE JOINTS. SPLICES SHALL BE STAGGERED A MINIMUM OF 30 BAR DIAMETERS.
10. LONGITUDINAL STEEL SHALL BE LAPPED 20 BAR DIAMETERS AT SPLICES. TRANSVERSE STEEL SHALL BE LAPPED 30 BAR DIAMETERS AT SPLICES.

ACCESS STRUCTURE NOTES

1. ALL EXPOSED METAL PARTS SHALL BE GALVANIZED. WELDING, MACHINING AND DRILLING SHALL BE DONE BEFORE GALVANIZING.

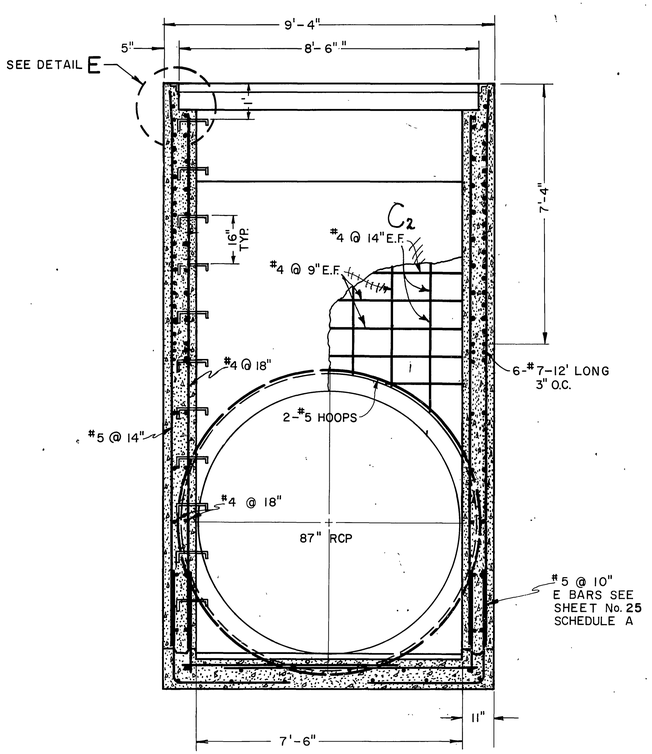

SECTION A-A

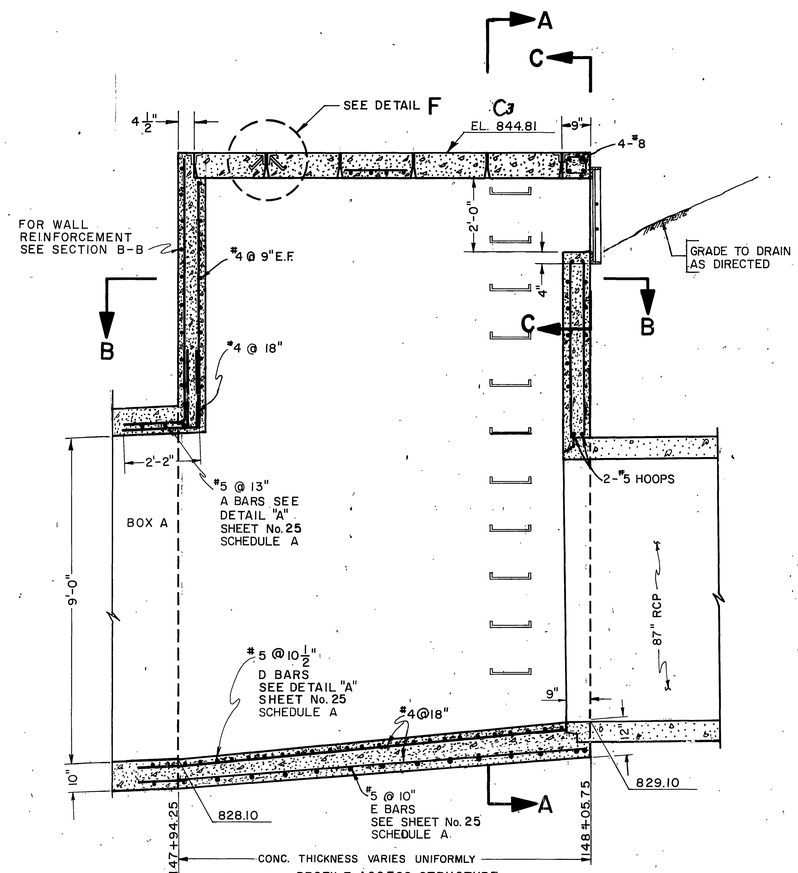

PROFILE ACCESS STRUCTURE

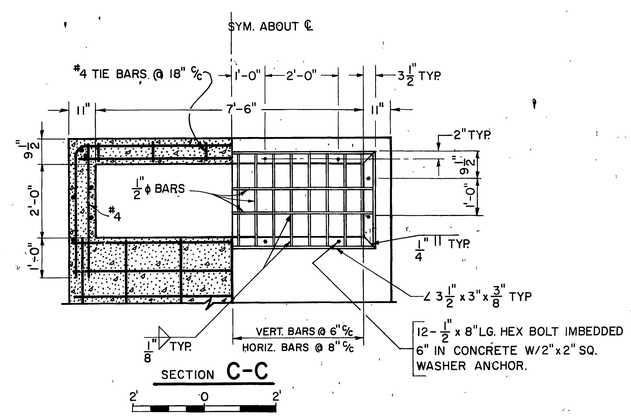

SECTION C-C

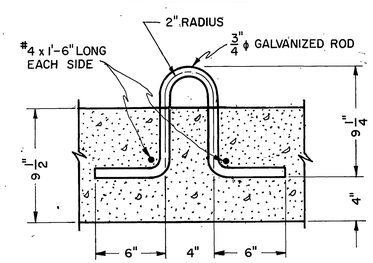

TYPICAL LIFTING HOOK

REFERENCE	DESCRIPTION	APPROVED	DATE
C2	Correct Arrows Section A-A		12-12-72
C3	Add Elevation		12-12-72

REVISIONS

AS BUILT

1970 STORM DRAIN BOND ISSUE PROJECT No. 11

RIVERSIDE COUNTY FLOOD CONTROL AND WATER CONSERVATION DISTRICT

MAGNOLIA CENTER STORM DRAIN
STAGE III
DETAILS
ACCESS STRUCTURE

PROJECT NO. 1-0-193

Approved: Chief Engineer R.E. No. 8822
Date: 5-26-72

Designed: A.P., J.H.
Drawn: D.J. & D.M.M.
Checked: J.H.
Date Drawn: 2-23-72

Sheet No. 13 of
Dwg. No. 1-266

D-245

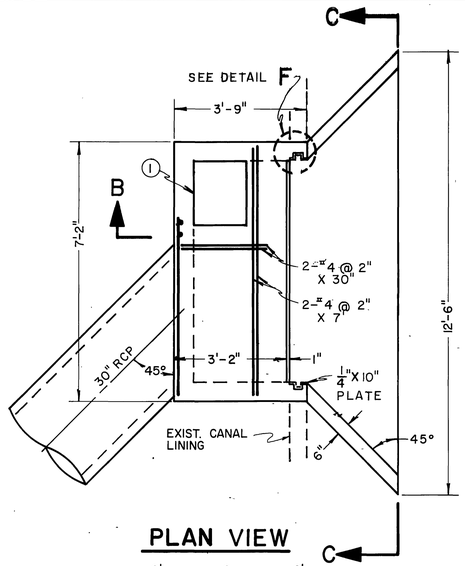

PLAN VIEW

2' 0 2'

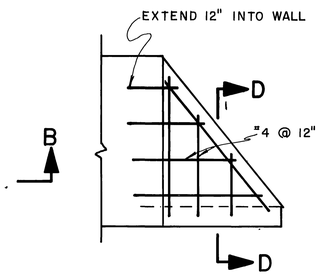

WING WALL

2' 0 2'

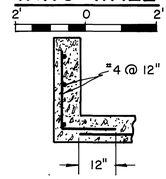

SECTION D-D

2' 0 2'

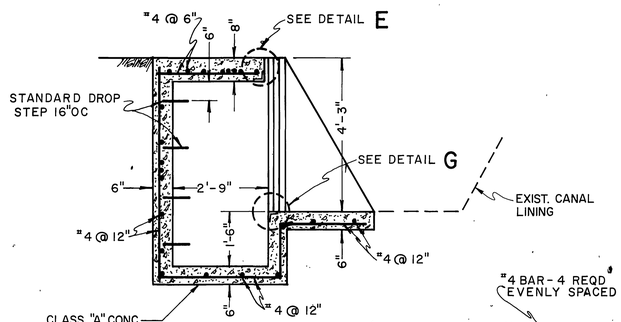

SECTION B-B

2' 0 2'

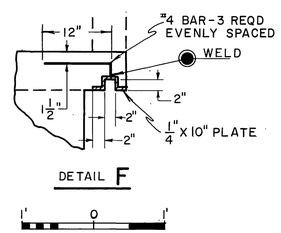

DETAIL F

1' 0 1'

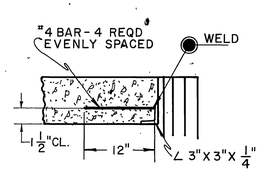

DETAIL E

1' 0 1'

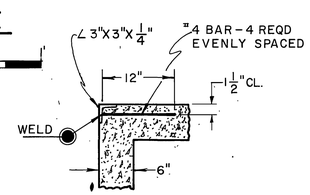

DETAIL G

1' 0 1'

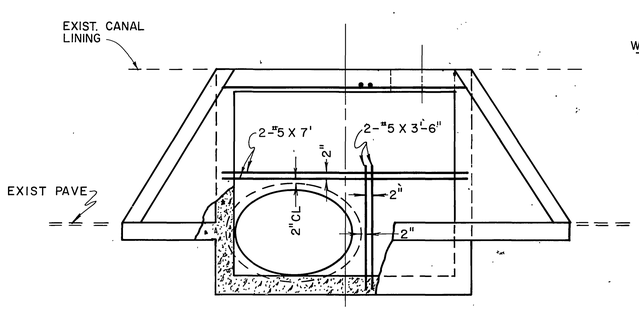

SECTION C-C

2' 0 2'

CATCH BASIN FOR RIVERSIDE CANAL

NOTES:

1. 22" X 18" FRAME AND COVER ALHAMBRA TYPE A1451 OR EQUAL.
2. CANAL LINING DAMAGED DURING CONSTRUCTION SHALL BE REPLACED WITH 2" THICK CLASS "B" CONCRETE.
3. ALL EXPOSED METAL PARTS SHALL BE GALVANIZED EXCEPT MANHOLE FRAME AND COVER. WELDING AND MACHINING SHALL BE DONE BEFORE GALVANIZING.

REFERENCE	DESCRIPTION	APPROVED	DATE
	No Change	JJD	11-16-77

REVISIONS
AS BUILT

1970 STORM DRAIN BOND ISSUE PROJECT No. 11

RIVERSIDE COUNTY FLOOD CONTROL AND WATER CONSERVATION DISTRICT

MAGNOLIA CENTER STORM DRAIN
STAGE III
CATCH BASIN FOR
RIVERSIDE CANAL

PROJECT NO. 1-0-193

Approved: John N. Rupp
Chief Engineer R.E. No. 8822
Date: 3-24-72

Designed: AP
Drawn: DJ
Checked: JH & DM
Date Drawn: 3-13-72

Sheet No. 14 of
Dwg. No. 1-266

D-245

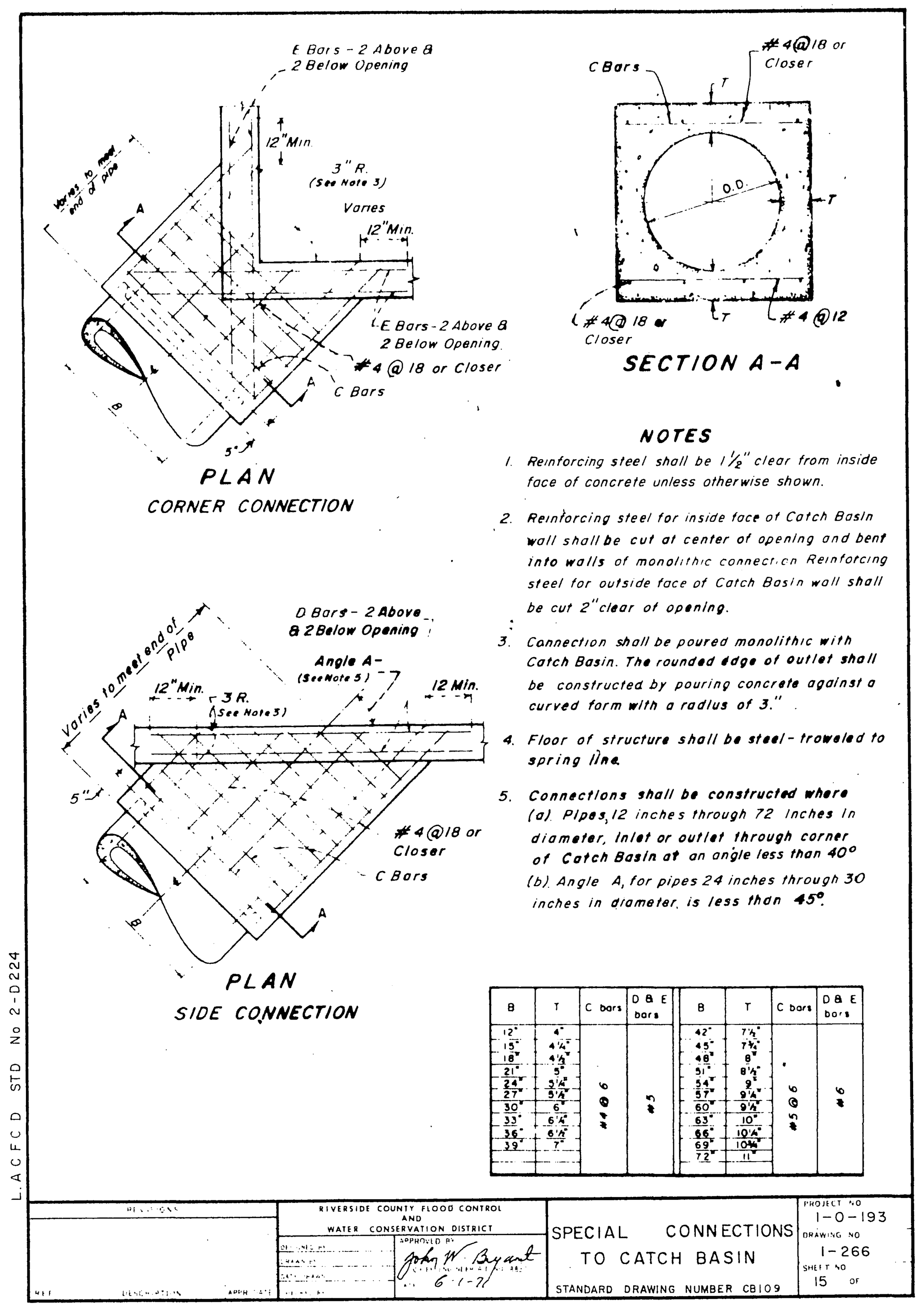
PLAN
CORNER CONNECTION
PLAN
SIDE CONNECTION
SECTION A-A
NOTES
1. Reinforcing steel shall be 1½" clear from inside face of concrete unless otherwise shown.
2. Reinforcing steel for inside face of Catch Basin wall shall be cut at center of opening and bent into walls of monolithic connection Reinforcing steel for outside face of Catch Basin wall shall be cut 2" clear of opening.
3. Connection shall be poured monolithic with Catch Basin. The rounded edge of outlet shall be constructed by pouring concrete against a curved form with a radius of 3."
4. Floor of structure shall be steel-troweled to spring line.
5. Connections shall be constructed where (a) Pipes, 12 inches through 72 inches in diameter, inlet or outlet through corner of Catch Basin at an angle less than 40° (b) Angle A, for pipes 24 inches through 30 inches in diameter, is less than 45°.
L.A.C.F.C.D. STD. No. 2-D224
RIVERSIDE COUNTY FLOOD CONTROL AND WATER CONSERVATION DISTRICT
SPECIAL CONNECTIONS TO CATCH BASIN
STANDARD DRAWING NUMBER CB109
1-0-193
1-266
15
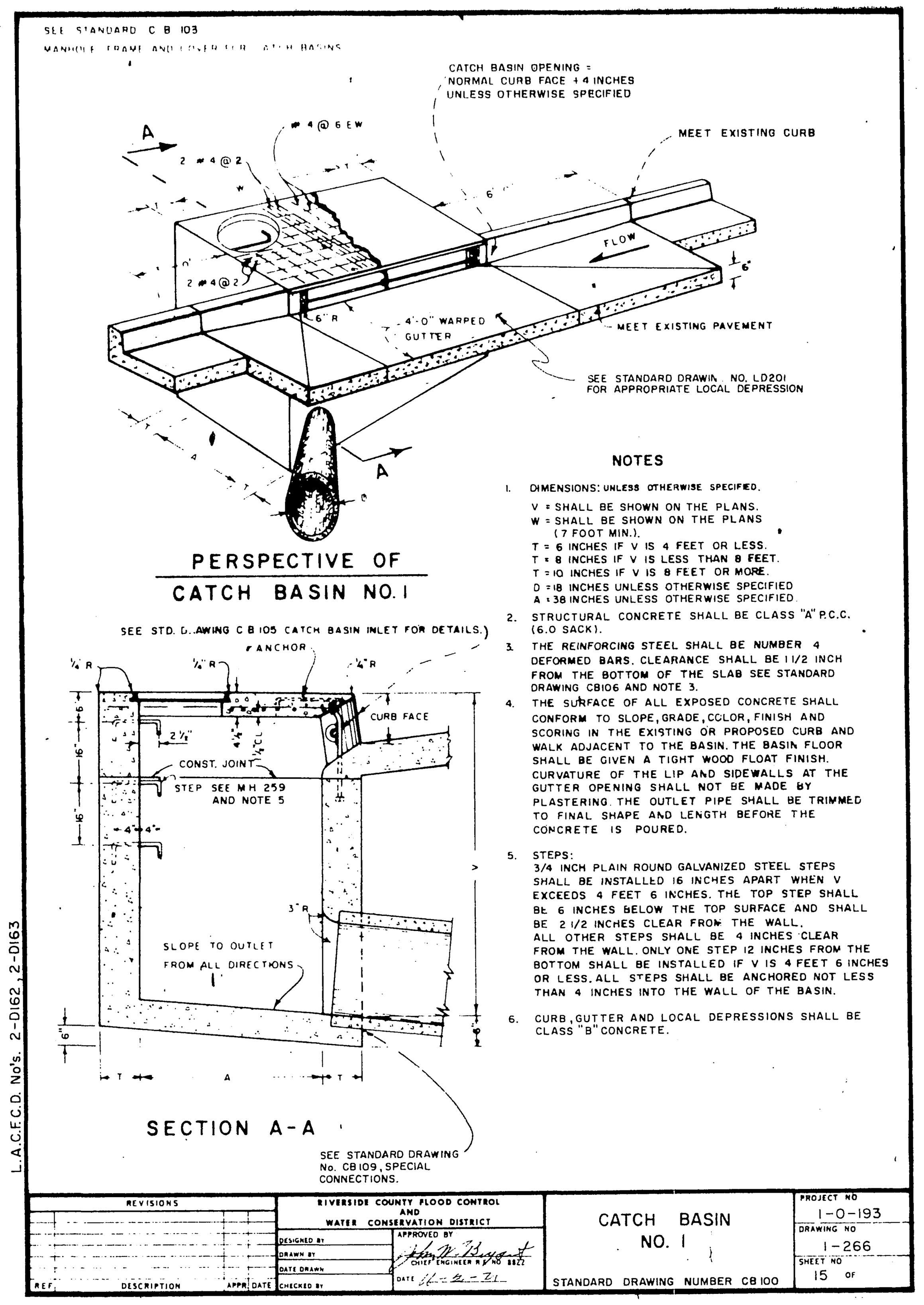
PERSPECTIVE OF CATCH BASIN NO. I
SECTION A-A
MEET EXISTING CURB
MEET EXISTING PAVEMENT
SEE STANDARD DRAWIN. NO. LD201 FOR APPROPRIATE LOCAL DEPRESSION
NOTES
1. DIMENSIONS: UNLESS OTHERWISE SPECIFIED.
V = SHALL BE SHOWN ON THE PLANS.
W = SHALL BE SHOWN ON THE PLANS (7 FOOT MIN.).
T = 6 INCHES IF V IS 4 FEET OR LESS.
T = 8 INCHES IF V IS LESS THAN 8 FEET.
T = 10 INCHES IF V IS 8 FEET OR MORE.
D = 18 INCHES UNLESS OTHERWISE SPECIFIED
A = 38 INCHES UNLESS OTHERWISE SPECIFIED.
2. STRUCTURAL CONCRETE SHALL BE CLASS "A" P.C.C. (6.0 SACK).
3. THE REINFORCING STEEL SHALL BE NUMBER 4 DEFORMED BARS. CLEARANCE SHALL BE 1 1/2 INCH FROM THE BOTTOM OF THE SLAB SEE STANDARD DRAWING CB106 AND NOTE 3.
4. THE SURFACE OF ALL EXPOSED CONCRETE SHALL CONFORM TO SLOPE, GRADE, COLOR, FINISH AND SCORING IN THE EXISTING OR PROPOSED CURB AND WALK ADJACENT TO THE BASIN. THE BASIN FLOOR SHALL BE GIVEN A TIGHT WOOD FLOAT FINISH. CURVATURE OF THE LIP AND SIDEWALLS AT THE GUTTER OPENING SHALL NOT BE MADE BY PLASTERING. THE OUTLET PIPE SHALL BE TRIMMED TO FINAL SHAPE AND LENGTH BEFORE THE CONCRETE IS POURED.
5. STEPS: 3/4 INCH PLAIN ROUND GALVANIZED STEEL STEPS SHALL BE INSTALLED 16 INCHES APART WHEN V EXCEEDS 4 FEET 6 INCHES. THE TOP STEP SHALL BE 6 INCHES BELOW THE TOP SURFACE AND SHALL BE 2 1/2 INCHES CLEAR FROM THE WALL. ALL OTHER STEPS SHALL BE 4 INCHES CLEAR FROM THE WALL. ONLY ONE STEP 12 INCHES FROM THE BOTTOM SHALL BE INSTALLED IF V IS 4 FEET 6 INCHES OR LESS. ALL STEPS SHALL BE ANCHORED NOT LESS THAN 4 INCHES INTO THE WALL OF THE BASIN.
6. CURB, GUTTER AND LOCAL DEPRESSIONS SHALL BE CLASS "B" CONCRETE.
L.A.C.F.C.D. No's 2-D162, 2-D163
RIVERSIDE COUNTY FLOOD CONTROL AND WATER CONSERVATION DISTRICT
CATCH BASIN NO. I
STANDARD DRAWING NUMBER CB100
1-0-193
1-266
15
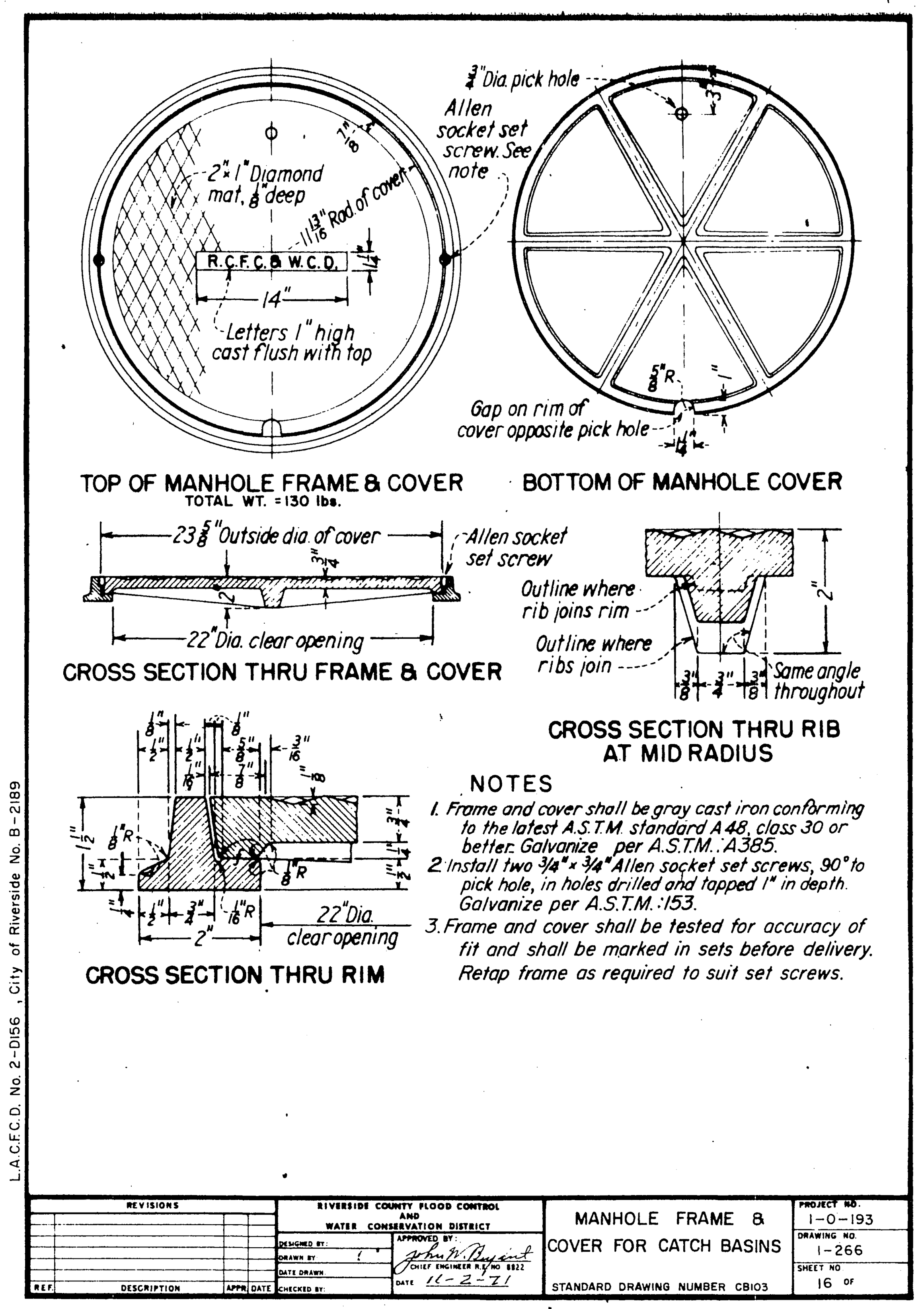
TOP OF MANHOLE FRAME & COVER
TOTAL WT. = 130 lbs.
BOTTOM OF MANHOLE COVER
CROSS SECTION THRU FRAME & COVER
CROSS SECTION THRU RIB AT MID RADIUS
CROSS SECTION THRU RIM
NOTES
1. Frame and cover shall be gray cast iron conforming to the latest A.S.T.M. standard A48, class 30 or better. Galvanize per A.S.T.M.: A385.
2. Install two 3/4" x 3/4" Allen socket set screws, 90° to pick hole, in holes drilled and tapped 1" in depth. Galvanize per A.S.T.M.: 153.
3. Frame and cover shall be tested for accuracy of fit and shall be marked in sets before delivery. Retap frame as required to suit set screws.
L.A.C.F.C.D. No. 2-D56, City of Riverside No. B-2189
RIVERSIDE COUNTY FLOOD CONTROL AND WATER CONSERVATION DISTRICT
MANHOLE FRAME & COVER FOR CATCH BASINS
STANDARD DRAWING NUMBER CB103
1-0-193
1-266
16
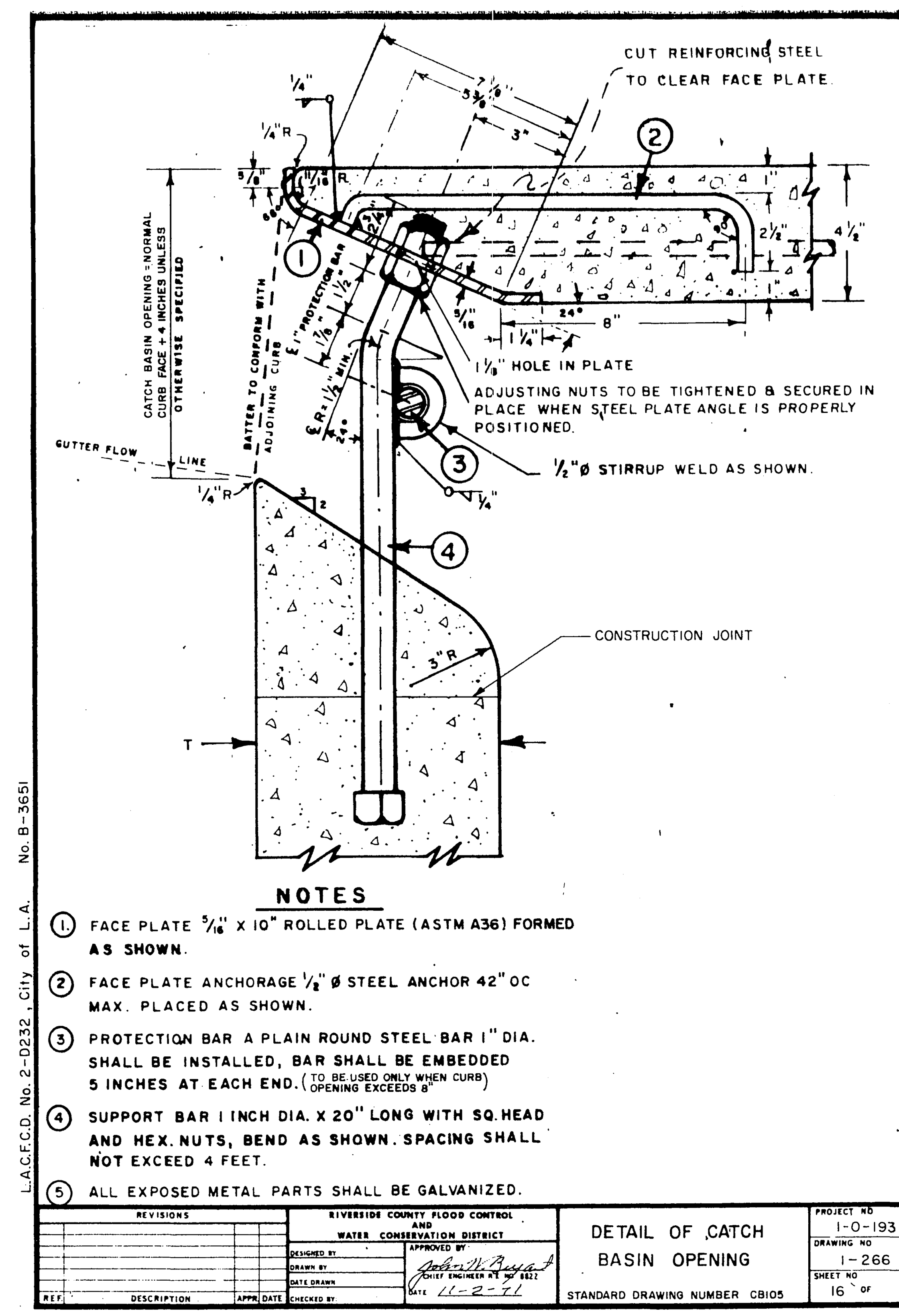
CUT REINFORCING STEEL TO CLEAR FACE PLATE
1¼" HOLE IN PLATE
ADJUSTING NUTS TO BE TIGHTENED & SECURED IN PLACE WHEN STEEL PLATE ANGLE IS PROPERLY POSITIONED.
½" Ø STIRRUP WELD AS SHOWN.
CONSTRUCTION JOINT
NOTES
1. FACE PLATE 5/16" X 10" ROLLED PLATE (ASTM A36) FORMED AS SHOWN.
2. FACE PLATE ANCHORAGE ½" Ø STEEL ANCHOR 42" OC MAX. PLACED AS SHOWN.
3. PROTECTION BAR A PLAIN ROUND STEEL BAR 1" DIA. SHALL BE INSTALLED, BAR SHALL BE EMBEDDED 5 INCHES AT EACH END. (TO BE USED ONLY WHEN CURB OPENING EXCEEDS 8")
4. SUPPORT BAR 1 INCH DIA. X 20" LONG WITH SQ. HEAD AND HEX. NUTS, BEND AS SHOWN. SPACING SHALL NOT EXCEED 4 FEET.
5. ALL EXPOSED METAL PARTS SHALL BE GALVANIZED.
L.A.C.F.C.D. No. 2-D232, City of L.A. No. B-3651
RIVERSIDE COUNTY FLOOD CONTROL AND WATER CONSERVATION DISTRICT
DETAIL OF CATCH BASIN OPENING
STANDARD DRAWING NUMBER CB105
1-0-193
1-266
16
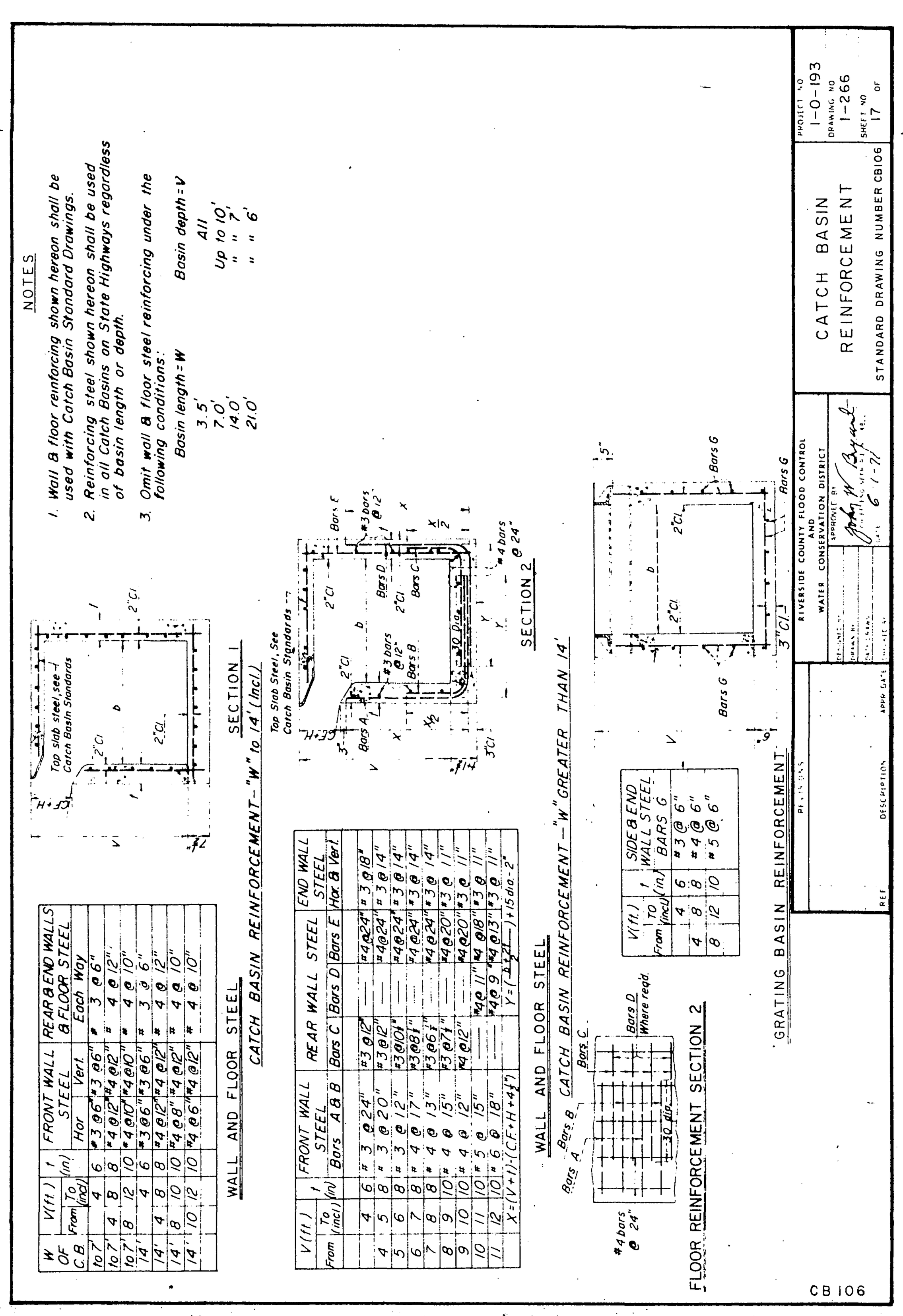
CATCH BASIN REINFORCEMENT
STANDARD DRAWING NUMBER CB106
1-0-193
1-266
17
CB 106
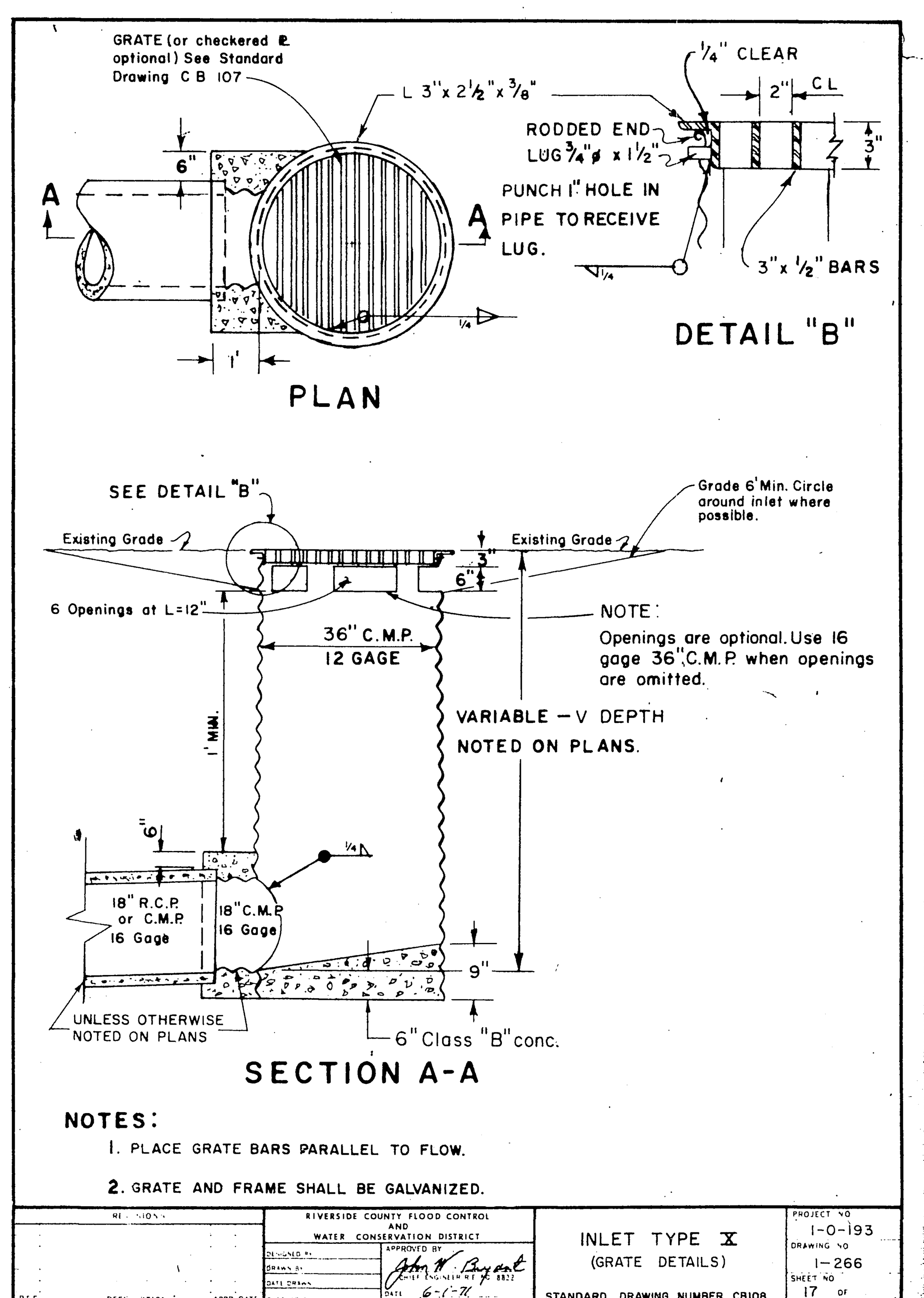
PLAN
DETAIL "B"
SECTION A-A
NOTE: Openings are optional. Use 16 gage 36" C.M.P. when openings are omitted.
VARIABLE - V DEPTH NOTED ON PLANS.
NOTES:
1. PLACE GRATE BARS PARALLEL TO FLOW.
2. GRATE AND FRAME SHALL BE GALVANIZED.
RIVERSIDE COUNTY FLOOD CONTROL AND WATER CONSERVATION DISTRICT
INLET TYPE X (GRATE DETAILS)
STANDARD DRAWING NUMBER CB108
1-0-193
1-266
17
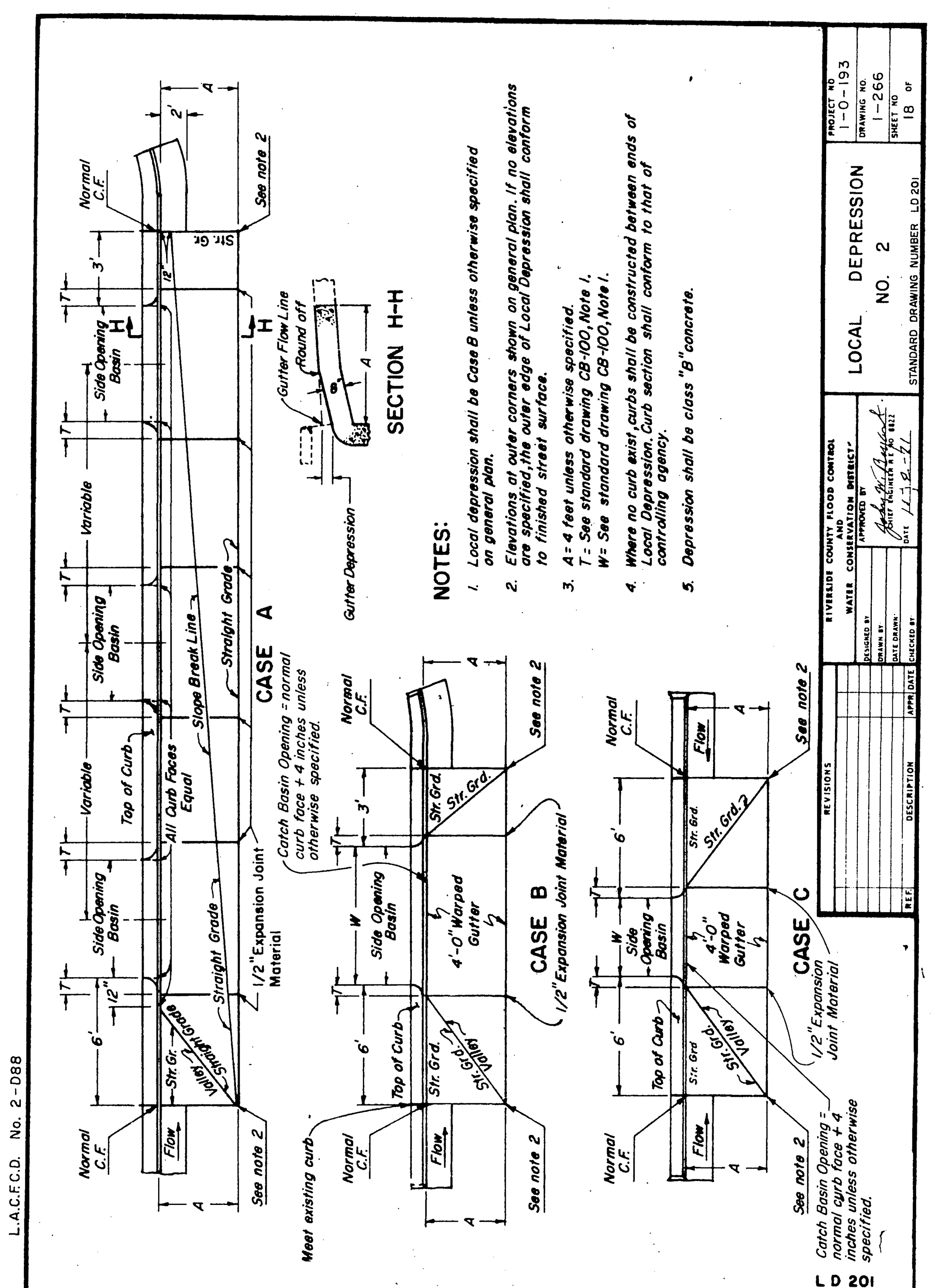
LOCAL DEPRESSION NO. 2
STANDARD DRAWING NUMBER LD201
1-0-193
1-266
18
L.A.C.F.C.D. No. 2-D88
LD 201
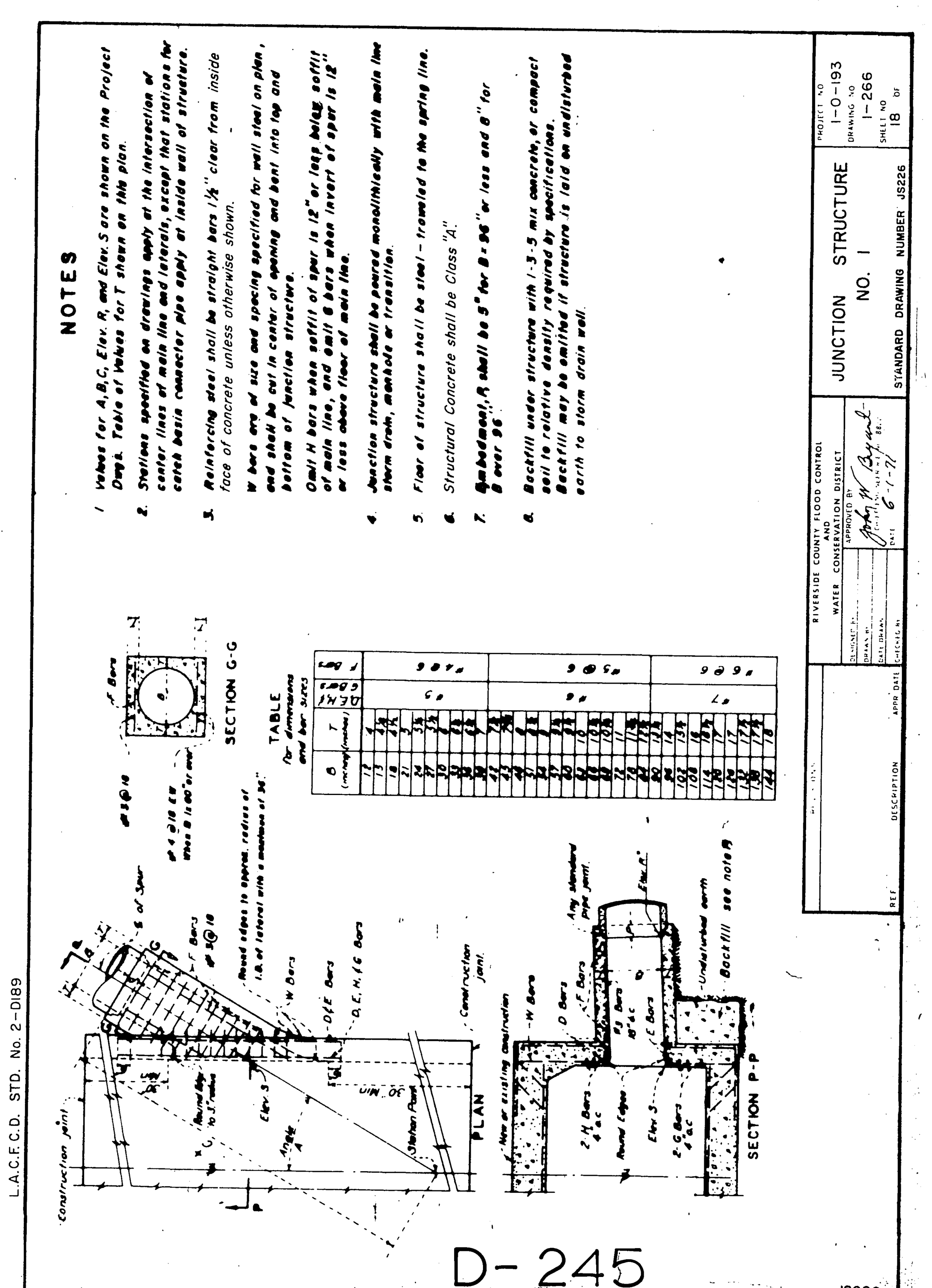
JUNCTION STRUCTURE NO. 1
STANDARD DRAWING NUMBER JS226
1-0-193
1-266
18
L.A.C.F.C.D. STD. No. 2-D189
D-245
JS226

NOTES FOR JUNCTION STRUCTURE NO. 2

1. VALUES for A, B, C, D, E, F, G, L, Elevation R, and Elevation S shown on improvement plan.
2. PIPE shall be cradled in class A concrete extending longitudinally to points 1 ft. beyond the limits of L H$\frac{1}{2}$ outside diameter of pipe + 4" as a minimum. Cradle may be omitted on side opposite lateral inlet when constructed in connection with existing pipe storm drain.
3. A AND B BARS shall be carried to point not less than J distance from center line, $J = \frac{7D}{12} + 6"$
4. RECTANGULAR OPENING in main line pipe shall be cut within these limits normal to pipe surface without damaging steel. Values for F, G, and L on improvement plan.
5. TRANSVERSE REINFORCEMENT in pipe shall be cut in center of opening and bent to uniform distance from top and bottom of junction structure.
6. STRUCTURAL CONCRETE shall be CLASS "A"
7. REINFORCING STEEL shall be round, deformed, straight bars, 1½" clear from inside face of concrete unless otherwise shown.
8. STEEL SCHEDULE as shown.
9. MONOLITHIC ARCH: When Junction Structure No. 2 is specified with reinforced monolithic arch storm drain, value D shall refer to the clear span of the arch. Reinforcing steel shall be cut and bent into junction structure the same as for pipe. Concrete cradle under reinforced monolithic arch is not required.
10. FLOOR of structure shall be steel-troweled to springing line.
11. ELEVATION S applies at center of main line on prolongation of invert of spur.

CITY of RIV. STD. No. 421
CITY of L.A. STD. No. B-1529
L.A.C.F.C.D. STD. No. 2-D112

RIVERSIDE COUNTY FLOOD CONTROL AND WATER CONSERVATION DISTRICT — JUNCTION STRUCTURE NO. 2 — STANDARD DRAWING NUMBER JS 227, SHEET 2 OF 2 — PROJECT NO. 1-0-193 — DRAWING NO. 1-266 — SHEET NO. 19 — APPROVED BY John W. Bryant — DATE 6-1-71

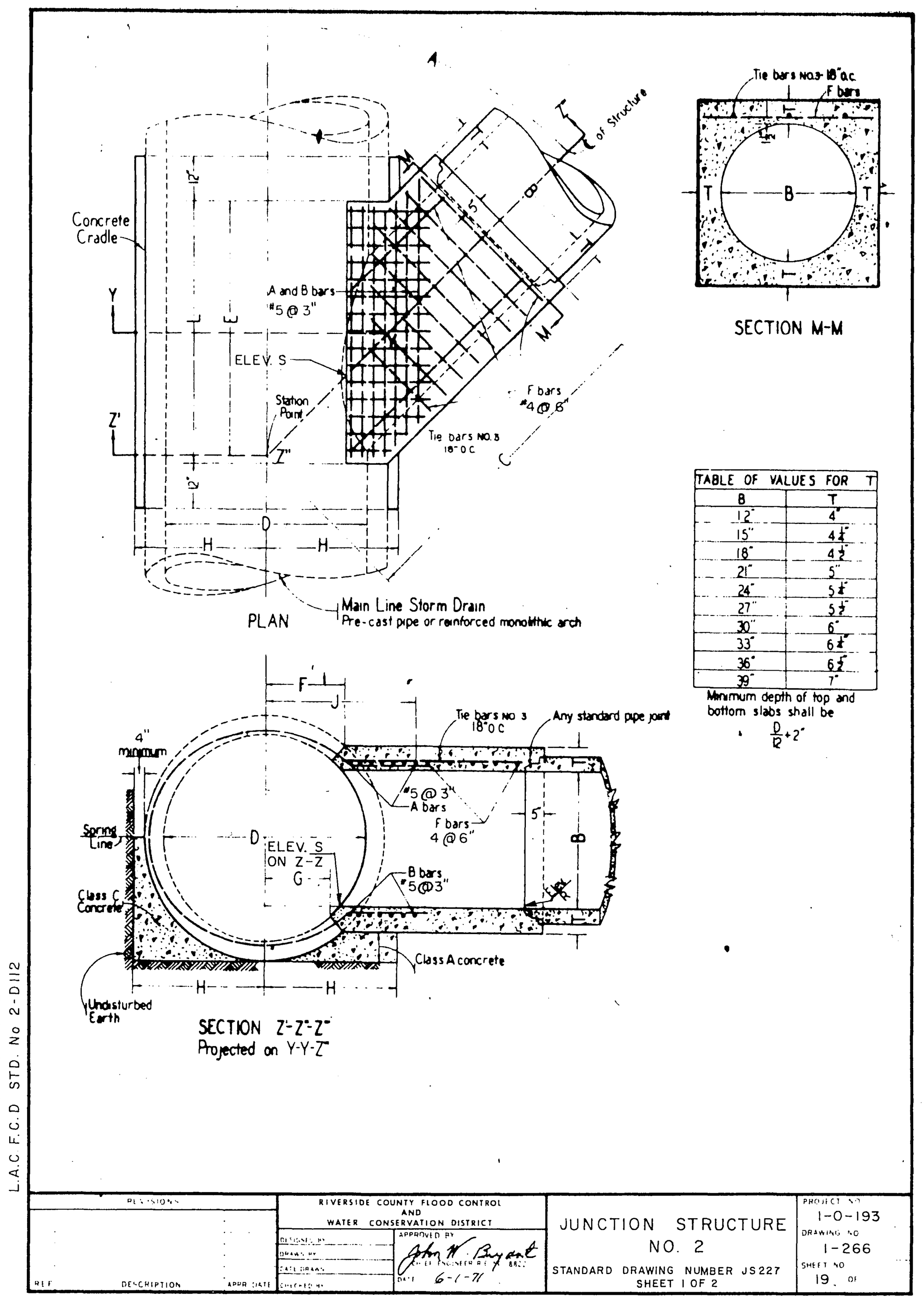

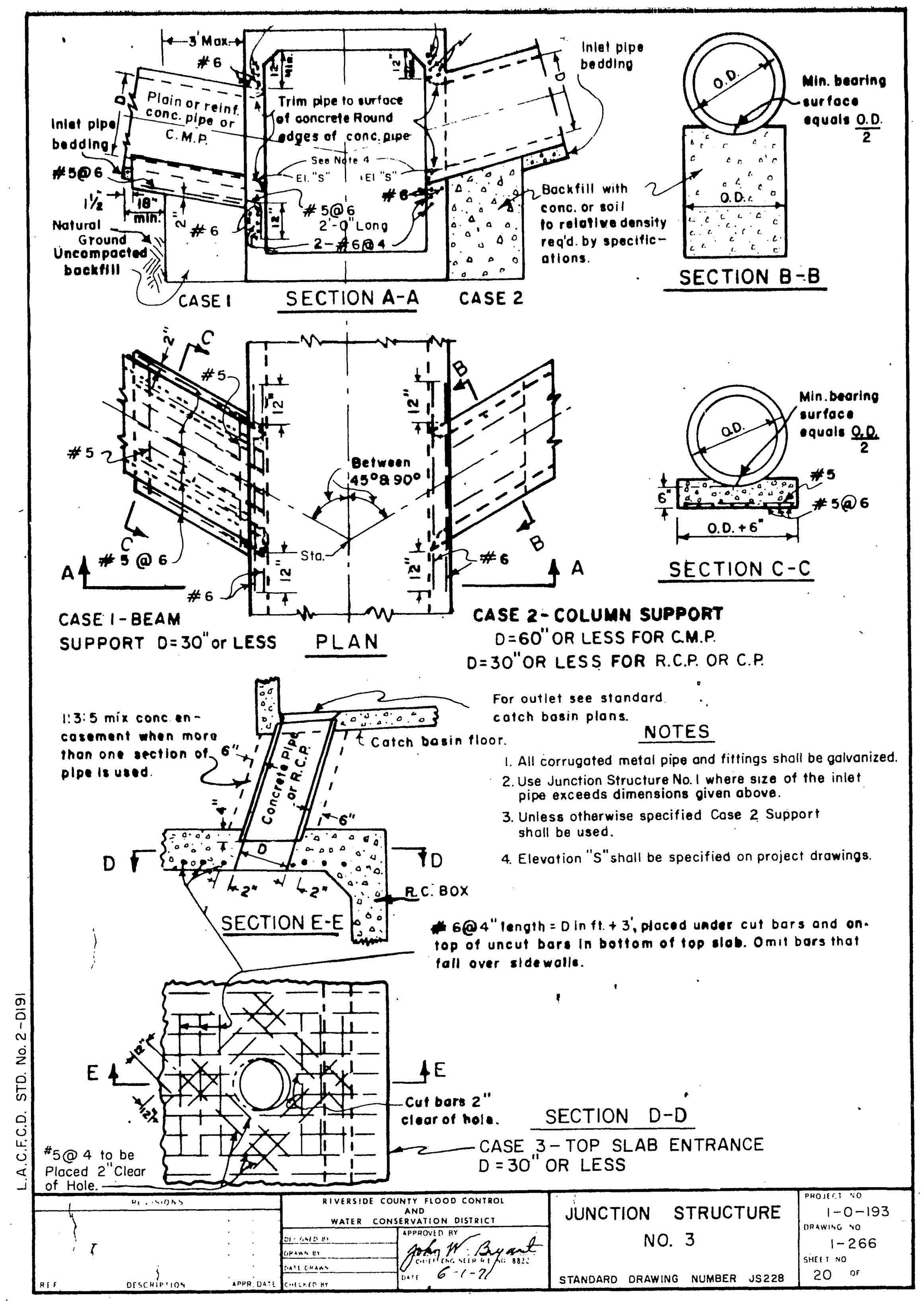

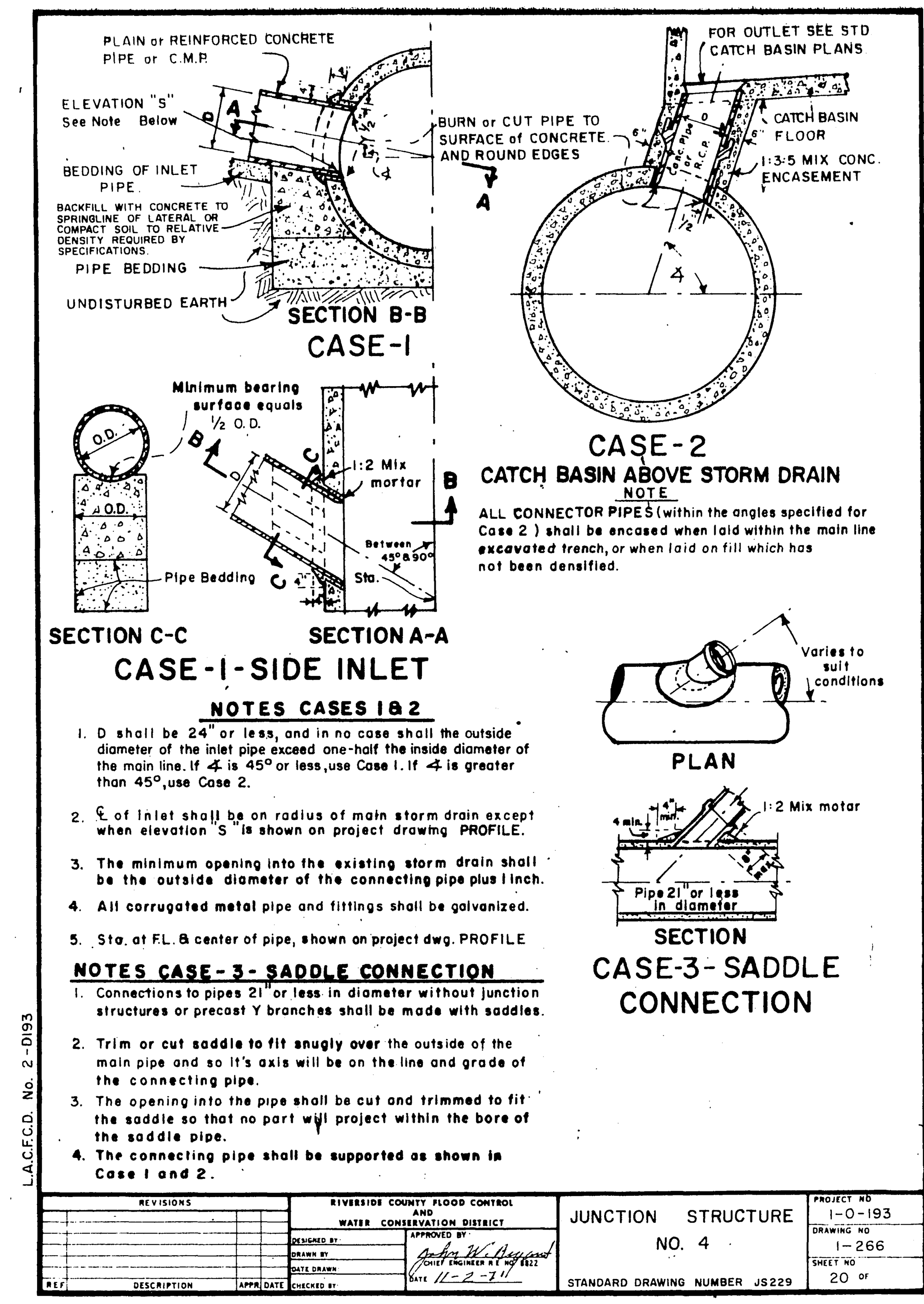

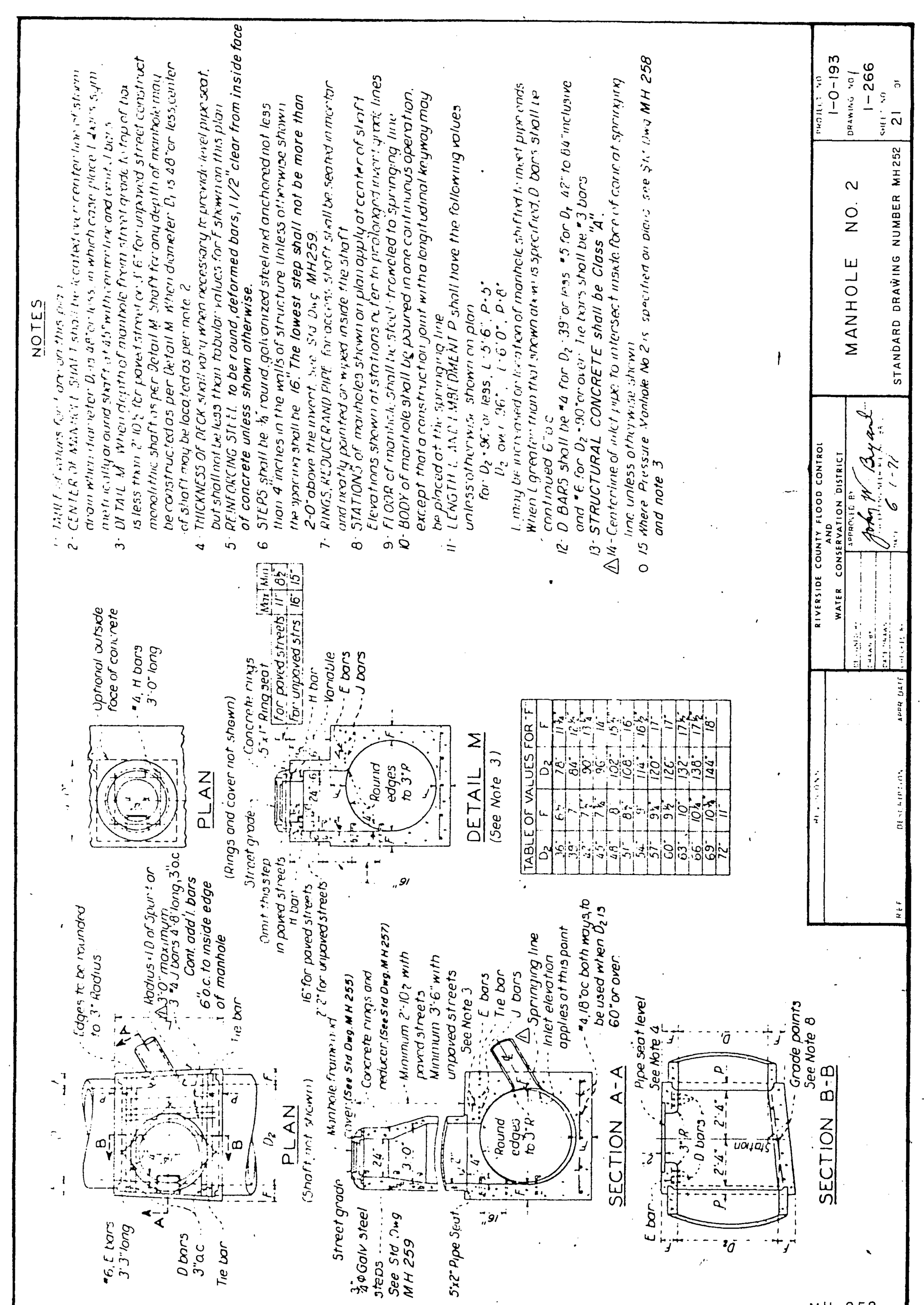

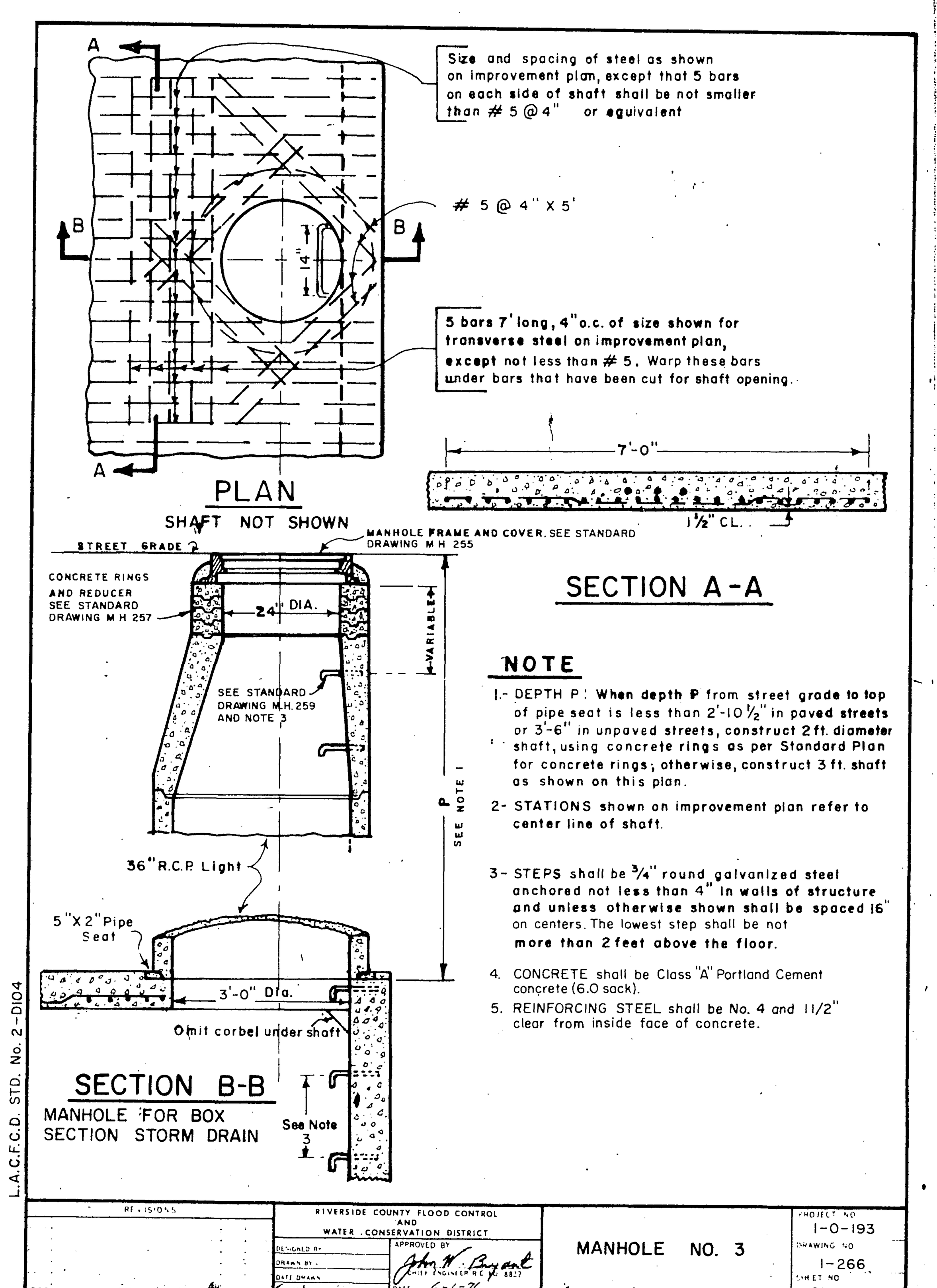

NOTES

1 - VALUES for A, B, C, D_1, D_2, E, L, Elevation R, and Elevation S are shown on the improvement plan
TABLE of values for F and T hereon
2 - LATERALS: If laterals enter on both sides of manhole, access shaft shall be located on side receiving the smaller lateral
3 - CENTER OF MANHOLE SHAFT shall be located over center line of main storm drain when D_1 is 48" or less, in which case place 8 E bars symmetrically around shaft at 45° with center line
4 - LENGTH L (shown on improvement plan) may be increased at option of Contractor to meet pipe ends, but any change in location of spur must be approved by the Engineer
5 - DETAIL M: When depth of manhole from street grade to top of box is less than 2'-10½" for paved streets or 3'-6" for unpaved streets, construct monolithic shaft as per Detail M
The Contractor shall have the option of constructing shaft as per Detail M for any depth of manhole
When diameter D_1 is 48" or less, center of shaft shall be located as per Note 3
6 - REINFORCING STEEL shall be round, deformed, straight bars, 1½" clear from inside face unless otherwise shown.
Tie bars shall be No 4 and spaced 18" on centers or closer.
7 - CONCRETE shall be class A
8 - STEPS shall be ¾" round, galvanized steel and anchored not less than 6 inches in the walls of structure. Unless otherwise shown the spacing shall be 16" on centers. The lowest step shall be not more than 2 feet above the invert
9 - RINGS, REDUCER, AND PIPE for access shaft shall be seated in cement mortar and neatly pointed or wiped inside shaft
10 - FLOOR of manhole shall be steel troweled to springing line
11 - BODY of manhole, including spur, shall be poured in one continuous operation, except that the Contractor shall have the option of placing at the springing line a construction joint with longitudinal keyway
12 - ELEVATION "S" applies at center of main line on prolongation of invert of spur

TABLE OF VALUES FOR F AND T

* D_2	F
12"	4"
15"	4 1/4"
18"	4 1/2"
21"	5"
24"	5 1/4"
27"	5 1/2"
30"	6"
33"	6 1/4"
36"	6 1/2"
39"	7"
42"	7 1/2"
45"	7 3/4"
48"	8"
51"	8 1/2"
54"	9"
57"	9 1/4"
60	9 1/2"
63"	10"
66"	10 1/4"
69"	10 3/4"
72"	11"
78"	11 3/4"
84"	12 1/2"
90"	13 1/4"
96"	14"
102"	15 1/2"
108"	16"
114"	16 1/2"
120"	17"
126"	17
132"	17 1/2"
138"	17 1/2"
144"	18"

* B	T	B	T
12"	4"	78"	11 3/4"
15"	4 1/4"	84"	12 1/2"
18"	4 1/2"	90"	13 1/4"
21"	5"	96"	14"
24"	5 1/4"	102"	15 1/2"
27"	5 1/2"	108"	16"
30"	6"	114"	16 1/2"
33"	6 1/4"	120"	17"
36"	6 1/2"	126"	17"
39"	7"	132"	17 1/2"
42"	7 1/2"	138"	17 1/2"
45"	7 3/4"	144"	18"
48"	8"		
51"	8 1/2"		
54"	9"		
57"	9 1/4"		
60"	9 1/2"		
63"	10"		
66"	10 1/4"		
69"	10 3/4"		
72"	11"		

* If D_2 or B falls between tabulated values then use the next highest value to determine F or T.

CITY of RIV. STD. No. 432
CITY of L.A. STD. No. B-1528

RIVERSIDE COUNTY FLOOD CONTROL AND WATER CONSERVATION DISTRICT — MANHOLE NO. 4 — STANDARD DRAWING NUMBER MH254, SHEET 2 OF 2 — PROJECT NO. 1-0-193 — DRAWING NO. 1-266 — SHEET NO. 22 — APPROVED BY John W. Bryant — DATE 6-1-71

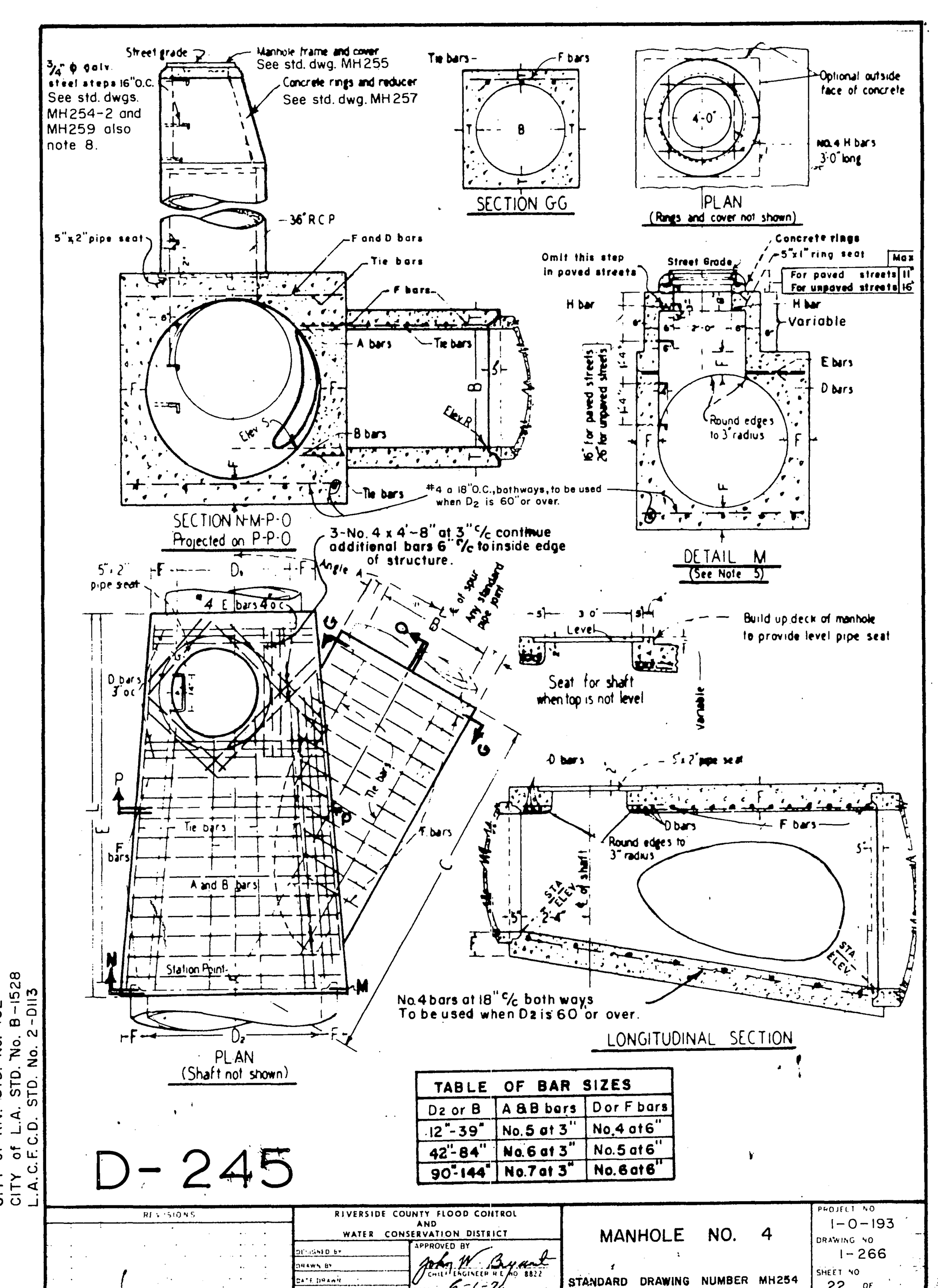

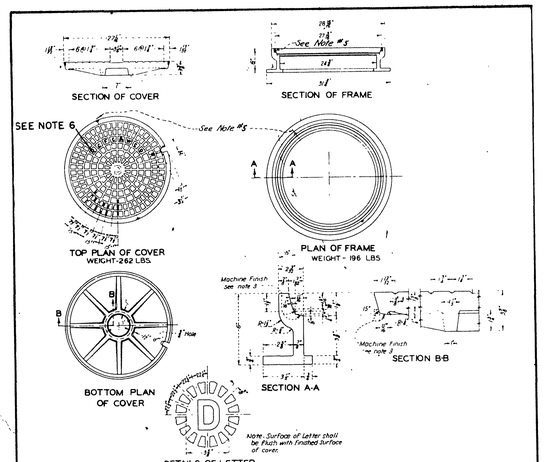

NOTES

1. The Manhole Frame and Cover shall be made of gray cast iron conforming to the latest A.S.T.M. standard A48, class 30 or better
2. All parts of the Manhole Frame and Cover except machined surfaces shall be coated with asphaltum paint
3. The Manhole Frame and Cover shall be tested for accuracy of fit and shall be marked in sets before delivery. The Cover shall fit the Frame snugly but not tightly
4. The weights of the Frame and Cover shall not vary more than two percent from those given hereon
5. Covers for manholes located in right of way, easements, alleys, parkways and all other places except paved streets shall be provided with allen socket set screw locking devices. The Contractor shall drill and tap two holes to a depth of 1" at 90° to jack hole and install 3/4" x 3/4" allen socket set screws therein
6. Cast Letters R.C.F.C. & W.C.D.

CITY of L.A. STD. No. B-2855
L.A.C.F.C.D. STD. No. 2-0181

REVISIONS	RIVERSIDE COUNTY FLOOD CONTROL AND WATER CONSERVATION DISTRICT	MANHOLE FRAME & COVER NON-ROCKING	PROJECT NO 1-0-193
REF. DESCRIPTION APPR. DATE	DESIGNED BY / DRAWN BY / DATE DRAWN / DATE CHECKED BY / APPROVED BY John W. Bryant, CHIEF ENGINEER R.E. No. 8822 DATE 6-1-71	STANDARD DRAWING NUMBER MH 255	DRAWING NO 1-266 SHEET NO 23 OF

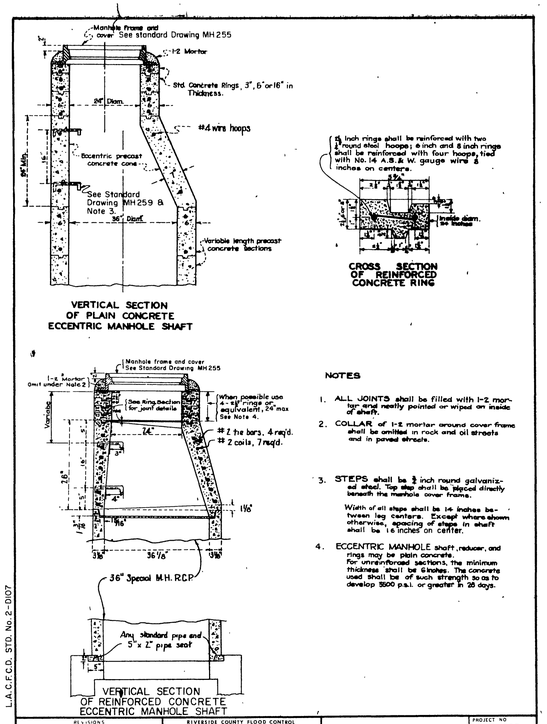

NOTES

1. ALL JOINTS shall be filled with 1:2 mortar and neatly pointed or wiped on inside of shaft.
2. COLLAR of 1:2 mortar around cover frame shall be omitted in rock and oil streets and in paved streets.
3. STEPS shall be 3/4 inch round galvanized steel. Top step shall be placed directly beneath the manhole cover frame. Width of all steps shall be 14 inches between leg centers. Except where shown otherwise, spacing of steps in shaft shall be 16 inches on center.
4. ECCENTRIC MANHOLE shaft, reducer, and rings may be plain concrete. For unreinforced sections, the minimum thickness shall be 6 inches. The concrete used shall be of such strength so as to develop 3500 p.s.i. or greater in 28 days.

L.A.C.F.C.D. STD. No. 2-0107

REVISIONS	RIVERSIDE COUNTY FLOOD CONTROL AND WATER CONSERVATION DISTRICT	MANHOLE SHAFT FOR CAST PIPE	PROJECT NO 1-0-193
REF. DESCRIPTION APPR. DATE	DESIGNED BY / DRAWN BY / DATE DRAWN / DATE CHECKED BY / APPROVED BY John W. Bryant, CHIEF ENGINEER R.E. No. 8822 DATE 6-1-71	STANDARD DRAWING NUMBER MH257	DRAWING NO 1-266 SHEET NO 23 OF

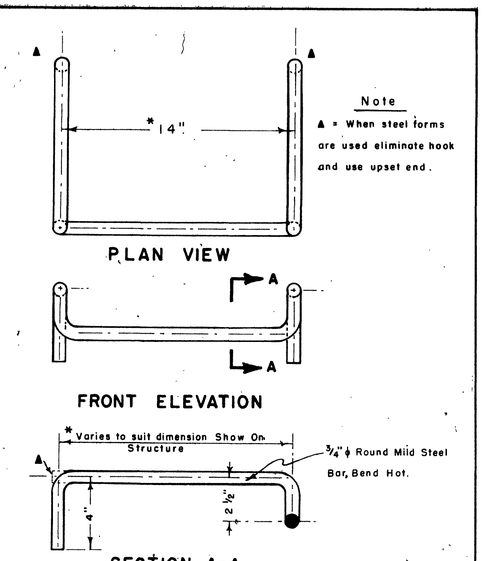

NOTE:

THIS DETAIL SHALL BE USED WHEREVER STEPS ARE REQUIRED.

L.A.C.F.C.D. 2-095

REVISIONS	RIVERSIDE COUNTY FLOOD CONTROL AND WATER CONSERVATION DISTRICT	STANDARD DROP STEP	PROJECT NO 1-0-193
REF. DESCRIPTION APPR. DATE	DESIGNED BY / DRAWN BY / DATE DRAWN / DATE CHECKED BY / APPROVED BY John W. Bryant, CHIEF ENGINEER R.E. No. 8822 DATE 6-1-71	STANDARD DRAWING NUMBER MH259	DRAWING NO 1-266 SHEET NO 24 OF

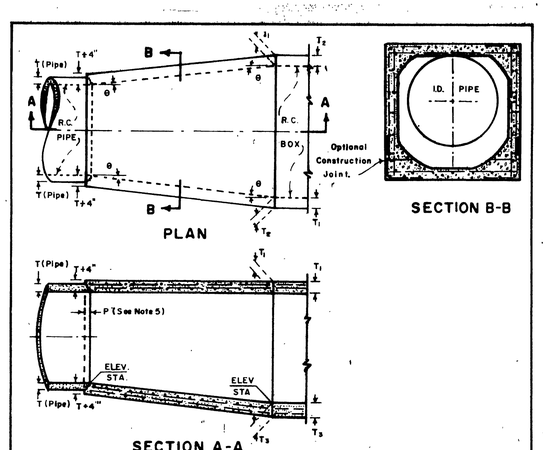

NOTES

1. The horizontal angle of divergence or convergence, θ, shall not exceed 5° 45'
2. Reinforcing steel bar sizes, spacing, pattern and cover over the steel shall be that of the box section. The bar lengths shall vary uniformly throughout the transition.
3. The concrete thickness shall be that of the box section unless the wall thickness of the pipe plus 4 inches is greater, in which case the concrete thickness shall vary uniformly from that of the box section to that of the pipe wall plus 4" inches
4. The interior surface shall be smooth and vary uniformly between the two adjoining sections.
5. At pipe juncture, embedment P shall be 5 inches for pipe sizes of 96 inches or less and 8 inches for pipe sizes over 96" inches.
6. Keyed construction joints of the same dimensions as those of the box may be carried through the transition structure at contractors option. See Sec. B-B above.
7. The transition structure shall be constructed in accordance with the general structural notes applying to box as shown on the project drawings.
8. Concrete shall be Class A.

L.A.C.F.C.D. STD. No. 2-0235

REVISIONS	RIVERSIDE COUNTY FLOOD CONTROL AND WATER CONSERVATION DISTRICT	TRANSITION STRUCTURE NO. 1	PROJECT NO 1-0-193
REF. DESCRIPTION APPR. DATE	DESIGNED BY / DRAWN BY / DATE DRAWN / DATE CHECKED BY / APPROVED BY John W. Bryant, CHIEF ENGINEER R.E. No. 8822 DATE 6-1-71	STANDARD DRAWING NUMBER TS301	DRAWING NO 1-266 SHEET NO 24 OF

DATA	DETAIL SCHEDULE A	B	C	D	E	F	G	H	I	J
DESIGN COVER	10'	14'								
WIDTH	7'-6"	5'-10"								
HEIGHT	9'	7'								
TOP SLAB T_1	9"	9"								
SIDE WALLS T_2	9"	9"								
BOTTOM SLAB T_3	10"	10"								
A BARS	#6 @ 16"	#6 @ 14"								
H	7'-6"	6'-0"								
B BARS	#5 @ 12"	#4 @ 10"								
H	2'-0"	1'-9"								
V	9'-2"	7'-2-1/2"								
C BARS	#4 @ 12"	#4 @ 18"								
D BARS	#6 @ 12"	#6 @ 14"								
H	7'-6"	6'-0"								
E BARS	#5 @ 12"	#4 @ 5"								
H	2'-6"	1'-9"								
V	2'-9"	2'-4"								
F BARS		#4 @ 10"								
H		1'-9"								
V		2'-0"								
CONCRETE CY/L.F.	1.04	0.827								
STEEL LBS/L.F.	112.70	95.3								
REMARKS										

LOCATION SCHEDULE STATIONS FROM	TO	BOX
136+00	147+94.25	A
150+61.25	159+53	B
161+79	169+02.08	B

NOTES

1. Structural concrete shall be Class "A".
2. All longitudinal bars shall be #4 @ 18 inches unless otherwise noted. Place bars in top and bottom slabs symmetrically about centerline. Place bars in walls symmetrically about mid-height of walls.
3. Clear cover for steel shall be 1½ inches for top slab and side walls and 2 inches for each face of bottom slab.
4. Steel is dimensioned to back of bar bend.
5. For construction on curves, straight transverse bars in top and bottom slabs shall be aligned radially with spacing measured at centerline. For straight bars and L-bars in walls, spacing shall be measured between the vertical legs of bars.
6. All transverse construction joints shall be in a vertical plane normal to the centerline and the spacing thereof shall not exceed 50 feet or be less than 10 feet. Continuous keyways will be required at all construction joints with #4 x 3 feet long dowels at 12 inches spacing placed at the center of sections with one end wrapped to prevent bond. A complete curtain of transverse steel shall be placed 3 inches from each face of the joint and longitudinal steel will not be continuous through the joint.
7. The walls and top slab may be poured monolithic, but after the walls have been poured, a delay of not less than 2 hours shall be made before pouring the top slab.
8. All quantities shown are approximate.

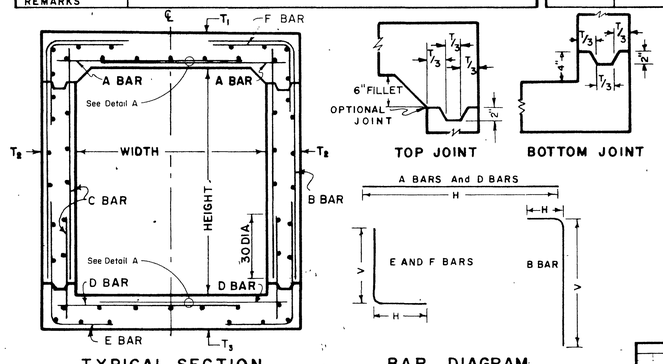

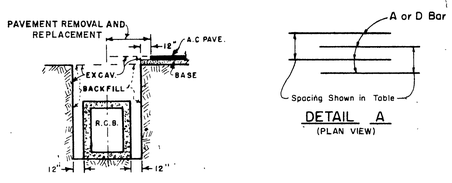

REVISIONS	RIVERSIDE COUNTY FLOOD CONTROL AND WATER CONSERVATION DISTRICT	SINGLE CELL R.C.B. STRUCTURAL DETAILS	PROJECT NO 1-0-193
REF. DESCRIPTION APPR. DATE	DESIGNED BY / DRAWN BY / DATE DRAWN / DATE CHECKED BY / APPROVED BY John W. Bryant, CHIEF ENGINEER R.E. No. 8822 DATE 11-22-71	STANDARD DRAWING NUMBER BX401	DRAWING NO 1-266 SHEET NO 25 OF

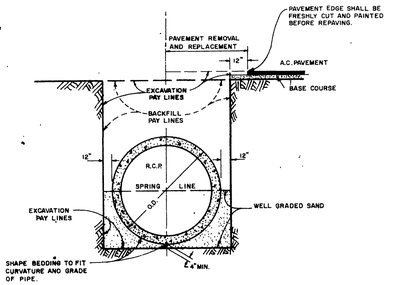

R.C.P. BEDDING

NOTE:
IF PAVEMENT REMOVAL IS NOT INCLUDED IN EXCAVATION, THE EXCAVATION PAYLINES WILL BE AS SHOWN AT LEFT OF THE ℄

REVISIONS	RIVERSIDE COUNTY FLOOD CONTROL AND WATER CONSERVATION DISTRICT	PIPE BEDDING DETAILS	PROJECT NO 1-0-193
REF. DESCRIPTION APPR. DATE	DESIGNED BY / DRAWN BY / DATE DRAWN / DATE CHECKED BY / APPROVED BY John W. Bryant, CHIEF ENGINEER R.E. No. 8822 DATE 11-22-71	STANDARD DRAWING NUMBER MB02	DRAWING NO 1-266 SHEET NO 26 OF

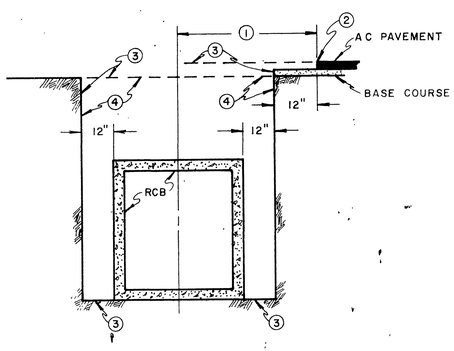

NOTES

1. PAVEMENT REMOVAL AND REPLACEMENT.
2. PAVEMENT EDGE SHALL BE FRESHLY CUT & PAINTED BEFORE REPAVING.
3. EXCAVATION PAY LINES.
4. BACKFILL PAY LINES.

D-245

REVISIONS	RIVERSIDE COUNTY FLOOD CONTROL AND WATER CONSERVATION DISTRICT	R.C. BOX EXCAVATION AND BACKFILL PAY LINES	PROJECT NO 1-0-193
REF. DESCRIPTION APPR. DATE	DESIGNED BY / DRAWN BY / DATE DRAWN / DATE CHECKED BY / APPROVED BY John W. Bryant, CHIEF ENGINEER R.E. No. 8822 DATE 5-4-72	STANDARD DRAWING NUMBER MB12	DRAWING NO 1-266 SHEET NO 26 OF

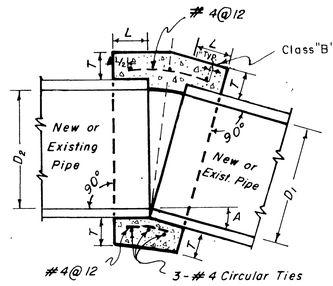

D	L	T
12"	1.0'	4"
18"	1.0'	5"
24"	1.0'	6"
36"	1.5'	8"
48"	1.5'	10"
57"	1.5'	10"
60"	1.75'	11"
66"	1.75'	11"

NOTES

1. A concrete collar is required where the change in grade exceeds 0.10 ft. per foot, or if change in alignment exceeds 0.10 ft. per foot.
2. Where pipes of different diameters are joined with a concrete collar, L and T shall be those of the larger pipe. D=D1 or D2 whichever is greater.
3. For pipe larger than 66" a special collar detail is required.
4. For pipe size not listed use next size larger.
5. Omit reinforcing on pipes 24" and less in diameter and on all pipes where angle A is less than 10°.
6. Where reinforcing is required the diameter of the circular ties shall be D + (2 x wall thickness) + 8".
7. When D1 is equal to or less than D2, join inverts and when D1 is greater than D2, join soffits.
8. Pipe may be corrugated metal pipe, concrete pipe, or reinforced concrete pipe.

L.A.C.F.C. 2-0.393

REVISIONS	RIVERSIDE COUNTY FLOOD CONTROL AND WATER CONSERVATION DISTRICT	CONCRETE COLLAR FOR PIPE 12 INCHES THROUGH 66 INCHES	PROJECT NO 1-0-193
REF. DESCRIPTION APPR. DATE	DESIGNED BY / DRAWN BY / DATE DRAWN / CHECKED BY / APPROVED BY / DATE 6-1-71	STANDARD DRAWING NUMBER M803	DRAWING NO 1-266 / SHEET NO 27 OF

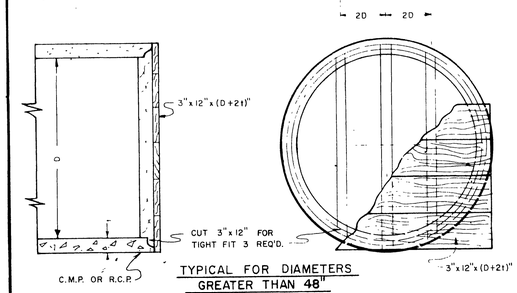

TYPICAL FOR DIAMETERS GREATER THAN 48"

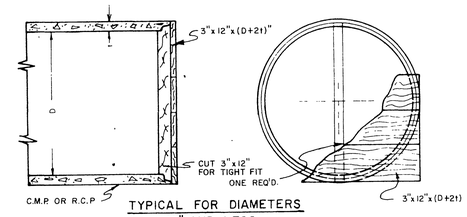

TYPICAL FOR DIAMETERS 48" AND LESS

NOTES:

1. NAIL 3"x 12" TO VERTICAL SUPPORTS WITH 40d GALV. NAILS 3" ⅋.
2. ALL LUMBER SHALL BE CREOSOTED DOUGLAS FIR, 1500 f CONSTRUCTION GRADE.

REVISIONS	RIVERSIDE COUNTY FLOOD CONTROL AND WATER CONSERVATION DISTRICT	TIMBER BULKHEADS	PROJECT NO 1-0-193
REF. DESCRIPTION APPR. DATE	DESIGNED BY / DRAWN BY / DATE DRAWN / CHECKED BY / APPROVED BY / DATE 11-2-71	STANDARD DRAWING NUMBER M804	DRAWING NO 1-266 / SHEET NO 27 OF

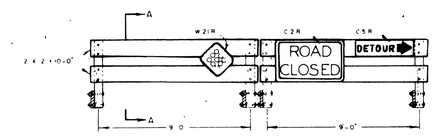

STANDARD BARRICADE WITH TYPICAL DETOUR SIGNS

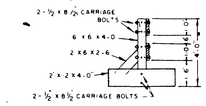

SECTION A-A

NOTE.

1. ALL LUMBER TO BE SELECT STRUCTURAL D.F. S4S.
2. Barricades to be given two coats of signal yellow paint after assembly
3. Signs, reflectors, and barricades to be furnished and installed by the contractor as directed by the engineer

CITY of RIV. STD. No 657

REVISIONS	RIVERSIDE COUNTY FLOOD CONTROL AND WATER CONSERVATION DISTRICT	CONST. BARRICADES	PROJECT NO 1-0-193
REF. DESCRIPTION APPR. DATE	DESIGNED BY / DRAWN BY / DATE DRAWN / CHECKED BY / APPROVED BY / DATE 6-1-71	STANDARD DRAWNING NUMBER M809	DRAWING NO 1-266 / SHEET NO 28 OF

GENERAL NOTES:

1. THESE PLANS SHOW MINIMUM SUGGESTED TRAFFIC CONTROL.
2. ACCESS TO PRIVATE PROPERTY SHALL BE MAINTAINED AT ALL TIMES.
3. SIGNS CODE NUMBER REFER TO THE STATE DIVISION OF HIGHWAYS STANDARD SIGN CHART FOR COLOR AND DIMENSIONS
4. USE SMALL BARRICADES WITH FLASHERS AND DELINEATORS (MAXIMUM SPACING 50 FT) WITH ADDITIONAL SIGNING AS REQUIRED FOR PUBLIC SAFETY THROUGHOUT THE CONSTRUCTION AREA. CONES WILL NOT BE ALLOWED
5. THE CONTRACTOR SHALL NOTIFY THE FOLLOWING AT LEAST 48 HOURS PRIOR TO CLOSING ANY STREET:
   a. RESIDENT ENGINEER 787-2015
   b. CITY TRAFFIC ENGINEER 787-7366
   c. CITY POLICE DEPARTMENT 787-7249
   d. CITY FIRE DEPARTMENT 787-7323
   e. RIVERSIDE UNIFIED SCHOOL DIST. 684-5110

(6) CONSTRUCTION ZONE

(7) FIRE DEPARTMENT STATION HOUSE No. 3, SEE SHEET No 3 NOTE 4 REGARDING FIRE FIGHTING EQUIPMENT ACCESS

(8) THE FOLLOWING STAGES CANNOT BE UNDER CONSTRUCTION CONCURRENTLY STAGES 1 & 2.

(9) THE FOLLOWING STAGES CANNOT BE UNDER CONSTRUCTION CONCURRENTLY STAGES 3, 4, 5 & 6.

10. THE CONTRACTOR SHALL SCHEDULE HIS WORK TO MAINTAIN NORMAL TRAFFIC MOVEMENT ON McMAHON STREET AND ARLINGTON AVENUE FROM NOV. 15 TO JAN. 15, THEREFORE STAGES 3,4,5 & 6 SHALL NOT BE WORKED FOR THIS PERIOD.

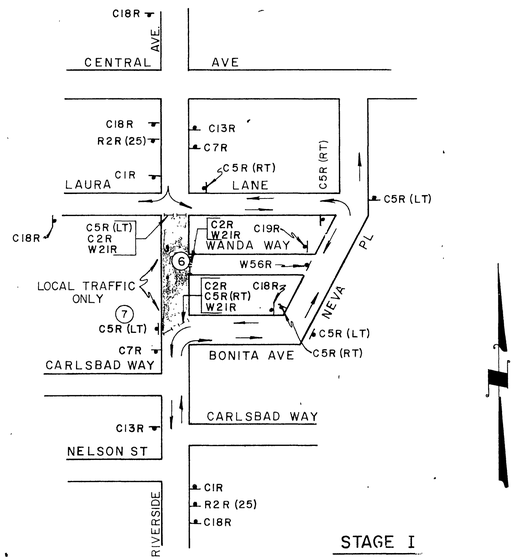

STAGE I

LEGEND

SIGNS
DELINEATOR
BARRICADES (LARGE)
DIRECTION OF TRAFFIC
FLAGMAN W/RED VEST & STOP/SLOW PADDLES

REFERENCE	DESCRIPTION	APPROVED	DATE
	REVISIONS		

RIVERSIDE COUNTY FLOOD CONTROL AND WATER CONSERVATION DISTRICT	
MAGNOLIA CENTER STORM DRAIN STAGE III TRAFFIC CONTROL	
PROJECT NO. 1-0-193	
Approved: John W. Bryant (Director of Engineering) Date: 5-22-72	Designed AP / Drawn DJ / Checked JH / Date Drawn 11-9-71 / Sheet No 29 of / Drawing No 1-266

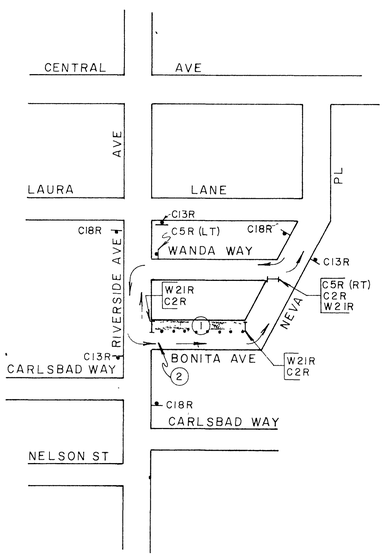

(1) CONSTRUCTION ZONE
(2) LOCAL TRAFFIC ONLY

STAGE II

REFERENCE	DESCRIPTION	APPROVED	DATE
	REVISIONS		

RIVERSIDE COUNTY FLOOD CONTROL AND WATER CONSERVATION DISTRICT	
MAGNOLIA CENTER STORM DRAIN STAGE III TRAFFIC CONTROL	
PROJECT NO. 1-0-93	
Approved: John W. Bryant (Director of Engineering) Date: 5-22-72	Designed AP / Drawn DJ / Checked JH / Date Drawn 11-9-71 / Sheet No 30 of / Drawing No 1-266

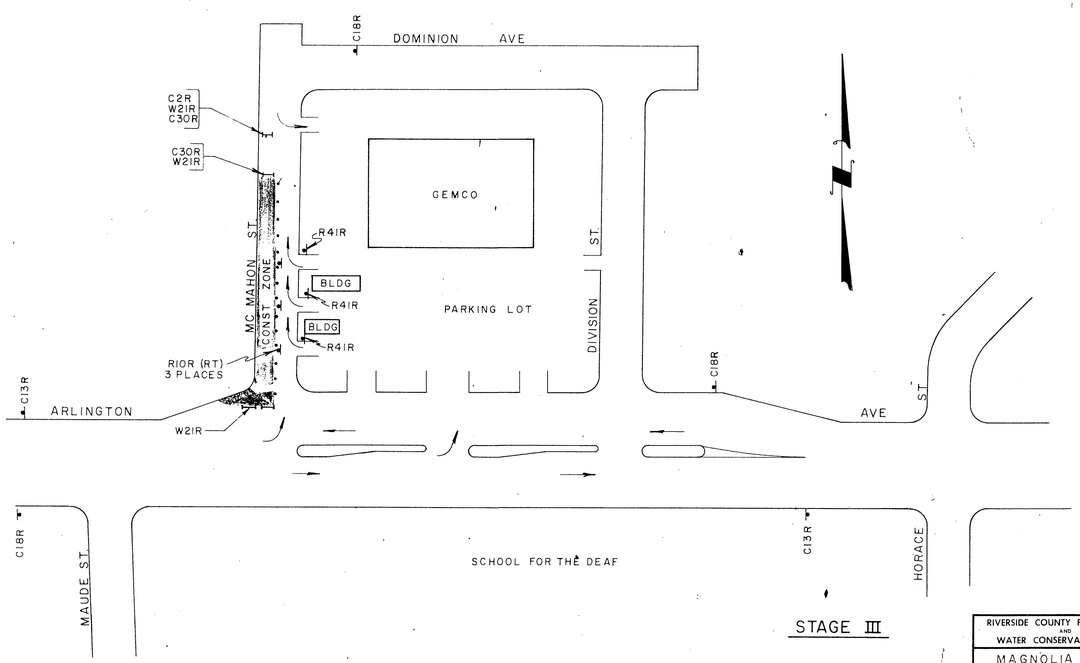

STAGE III

RIVERSIDE COUNTY FLOOD CONTROL AND WATER CONSERVATION DISTRICT

MAGNOLIA CENTER STORM DRAIN STAGE III

TRAFFIC CONTROL

PROJECT NO. 1-0-193

REFERENCE	DESCRIPTION	APPROVED	DATE

REVISIONS

Designed A.P. Drawn D.J. Checked J.H. Date Drawn 1-11-71 Sheet No. 31 Drawing No. 1-266 Date 3-26-72

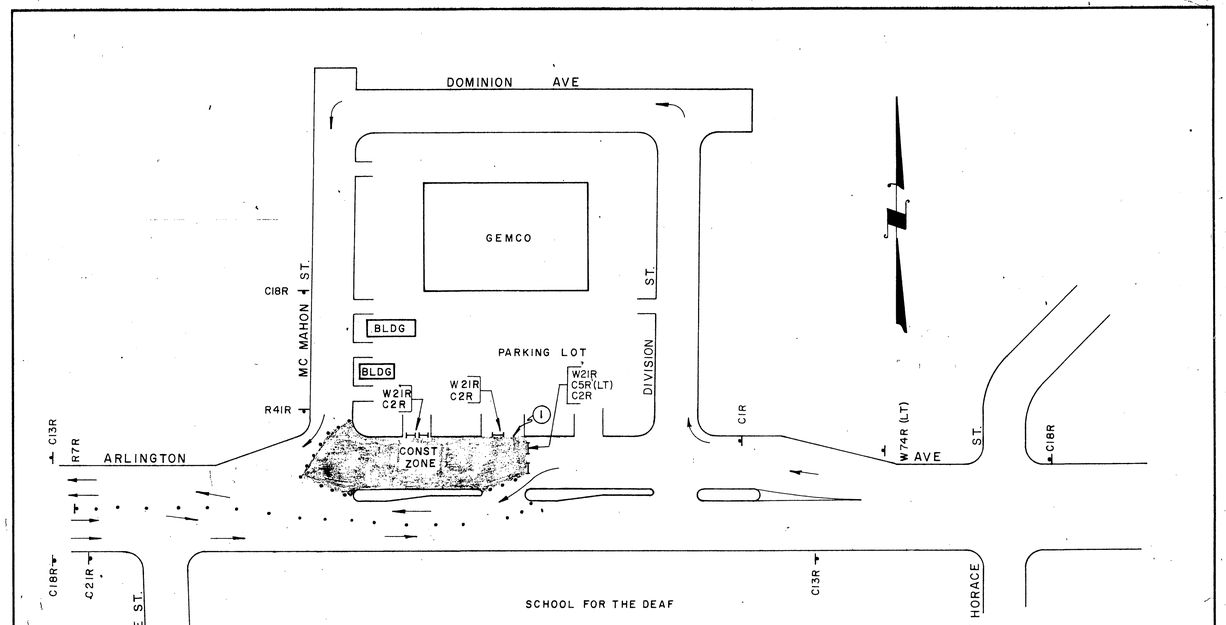

NOTE:

(1) MAY BE CLOSED ONLY WHEN WORK IS BEING DONE AT DRIVEWAY. TO REMAIN OPEN ALL OTHER TIMES.

STAGE IV

RIVERSIDE COUNTY FLOOD CONTROL AND WATER CONSERVATION DISTRICT

MAGNOLIA CENTER STORM DRAIN STAGE III

TRAFFIC CONTROL

PROJECT NO. 1-0-193

REFERENCE	DESCRIPTION	APPROVED	DATE

REVISIONS

Designed A.P. Drawn D.J. Checked J.H. Date Drawn 1-11-71 Sheet No. 32 Drawing No. 1-266 Date 3-26-72

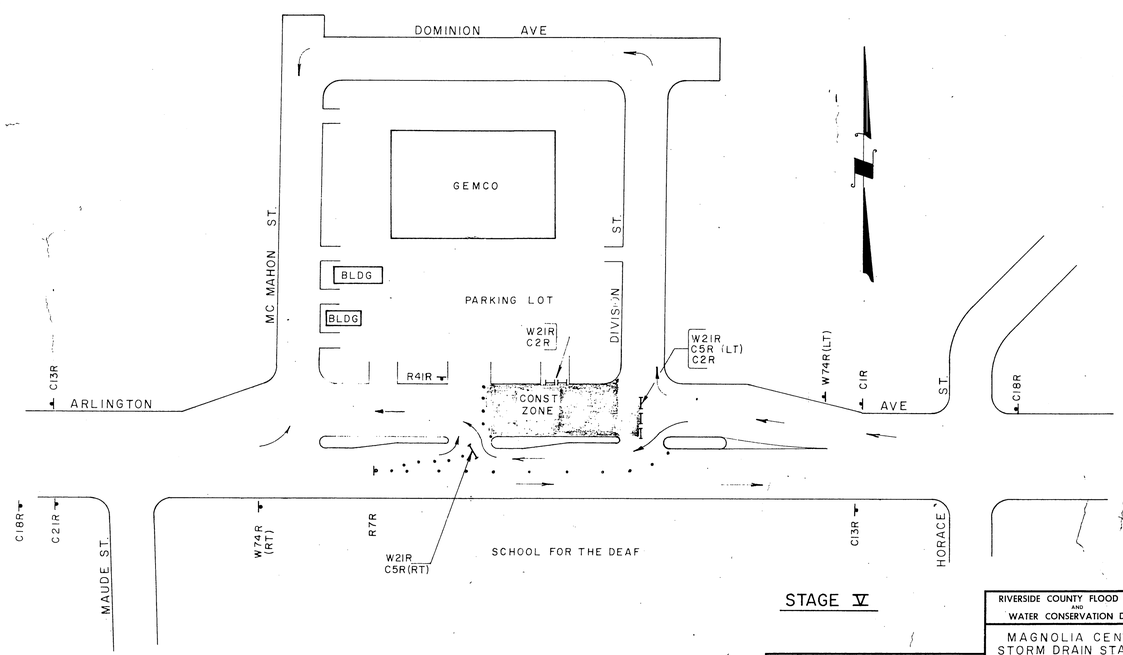

STAGE V

RIVERSIDE COUNTY FLOOD CONTROL AND WATER CONSERVATION DISTRICT

MAGNOLIA CENTER STORM DRAIN STAGE III

TRAFFIC CONTROL

PROJECT NO. 1-0-193

REFERENCE	DESCRIPTION	APPROVED	DATE

REVISIONS

Designed A.P. Drawn D.J. Checked J.H. Date Drawn 1-11-71 Sheet No. 33 Drawing No. 1-266 Date 3-26-72

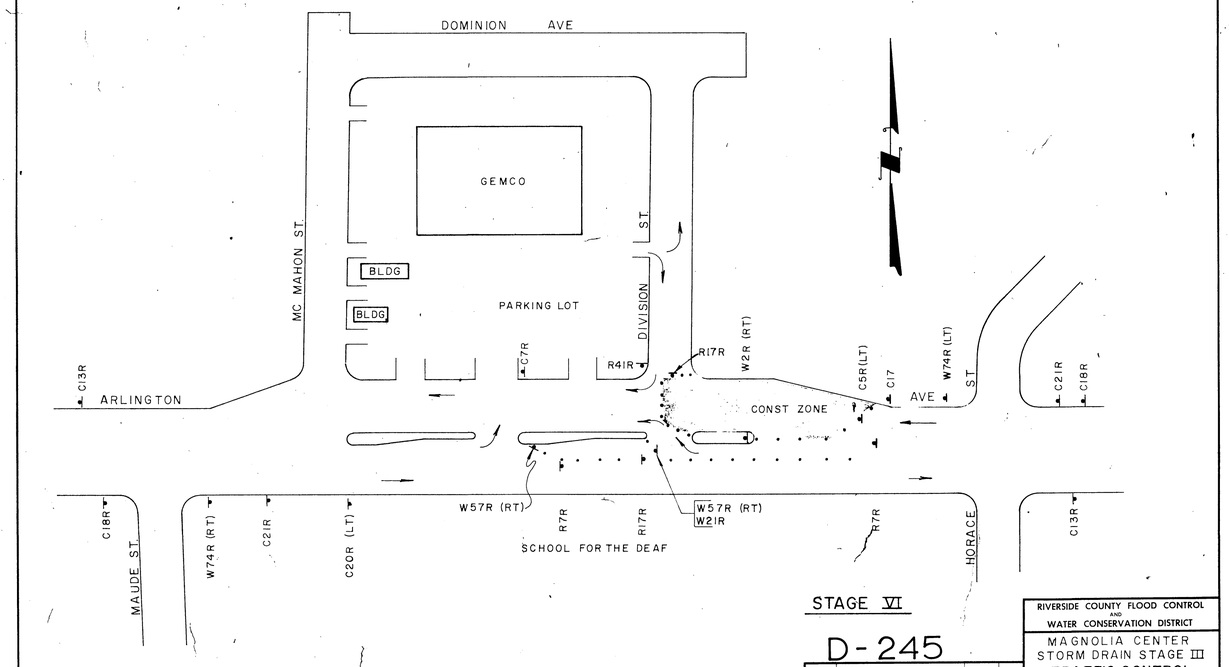

STAGE VI

D-245

RIVERSIDE COUNTY FLOOD CONTROL AND WATER CONSERVATION DISTRICT

MAGNOLIA CENTER STORM DRAIN STAGE III

TRAFFIC CONTROL

PROJECT NO. 1-0-193

REFERENCE	DESCRIPTION	APPROVED	DATE

REVISIONS

Designed A.P. Drawn D.J. Checked J.H. Date Drawn 1-11-71 Sheet No. 34 Drawing No. 1-266 Date 3-26-72

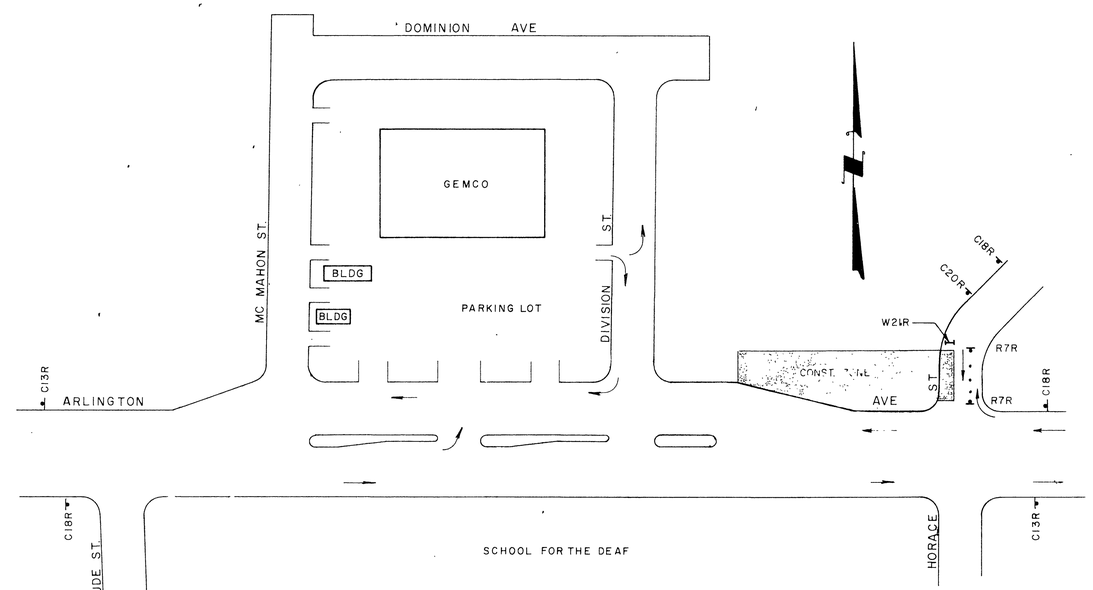

STAGE VII

REFERENCE	DESCRIPTION	APPROVED	DATE

REVISIONS

RIVERSIDE COUNTY FLOOD CONTROL AND WATER CONSERVATION DISTRICT

MAGNOLIA CENTER STORM DRAIN STAGE III

TRAFFIC CONTROL

PROJECT NO. 1-0-193

Approved: John P. Hansen Date: 9-26-72

Designed: A.P. Drawn: D.J. Checked: J.H. Date Drawn: 11-17-72

Sheet No. 25 Dwg. No. 1-266

D-245

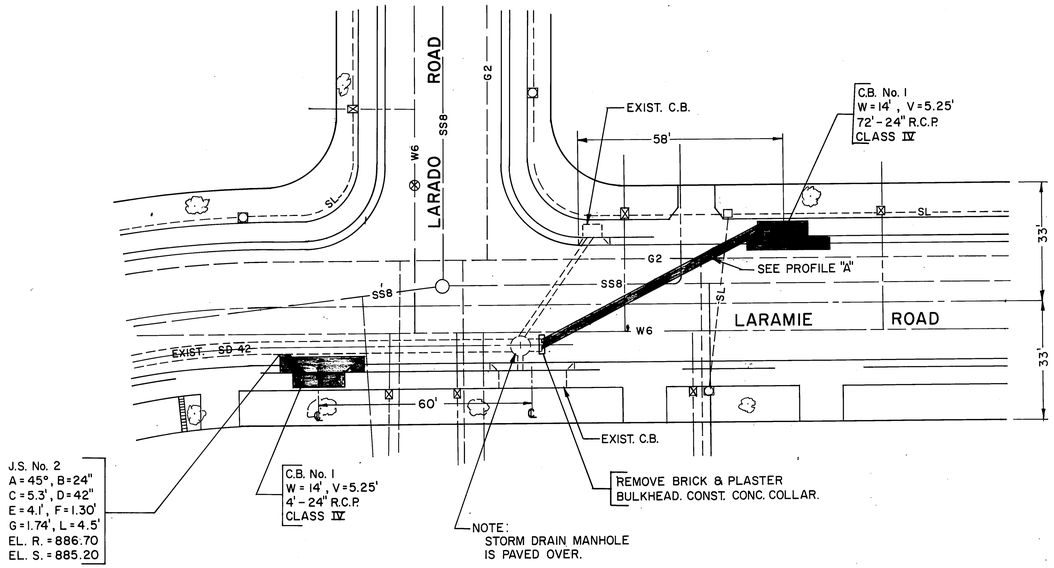

PLAN VIEW

DETAIL "A"

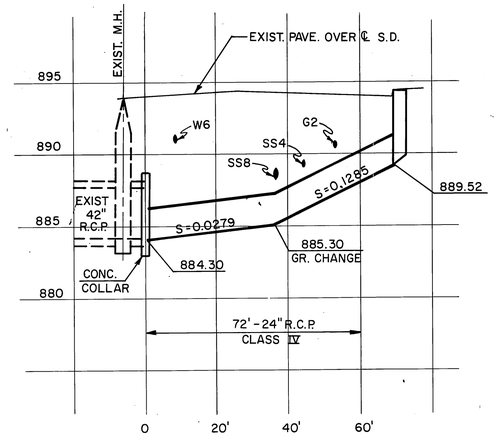

PROFILE "A"

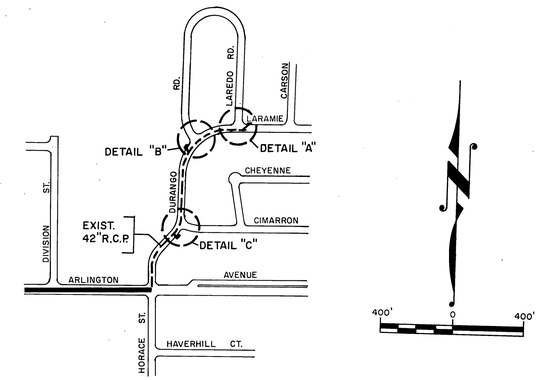

LOCATION MAP

NOTE:
FOR PLANS OF EXIST. 42" STORM DRAIN SEE
CITY OF RIVERSIDE PLANS,
"DURANGO STORM DRAIN"
DWG. No. D-129

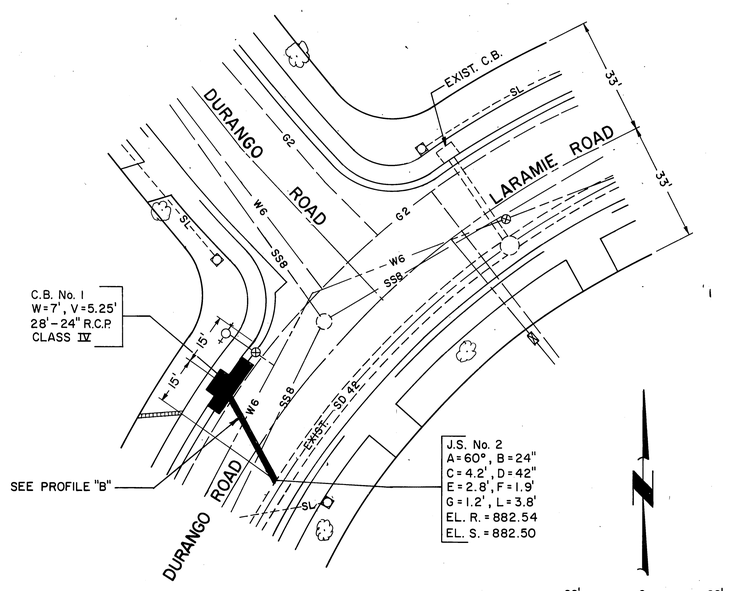

PLAN VIEW

DETAIL "B"

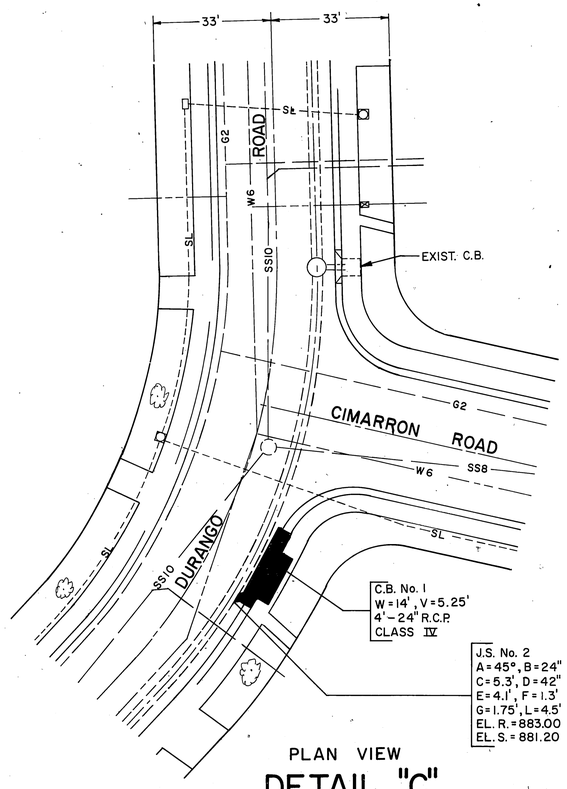

PLAN VIEW

DETAIL "C"

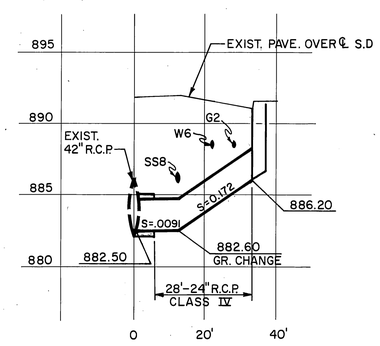

PROFILE "B"

PROJECT NO. 1-0-193

REFERENCE	DESCRIPTION	APPROVED	DATE
	No Change		12-12-72
ADDENDUM No. 1	ADDED THIS SHEET		

— REVISIONS —
AS BUILT

1970 STORM DRAIN BOND ISSUE PROJECT No. II

RIVERSIDE COUNTY FLOOD CONTROL AND WATER CONSERVATION DISTRICT

MAGNOLIA CENTER STORM DRAIN STAGE III
CATCH BASINS FOR EXISTING 42" STORM DRAIN

Approved: Arthur W. Bryant, Chief Engineer R.E. No 8822
Date: 6-14-72

Designed:
Drawn: R.A.S.
Checked:
Date Drawn:

Sheet No 36 of
Dwg. No 1-266

D-245