RIVERSIDE COUNTY FLOOD CONTROL AND WATER CONSERVATION DISTRICT

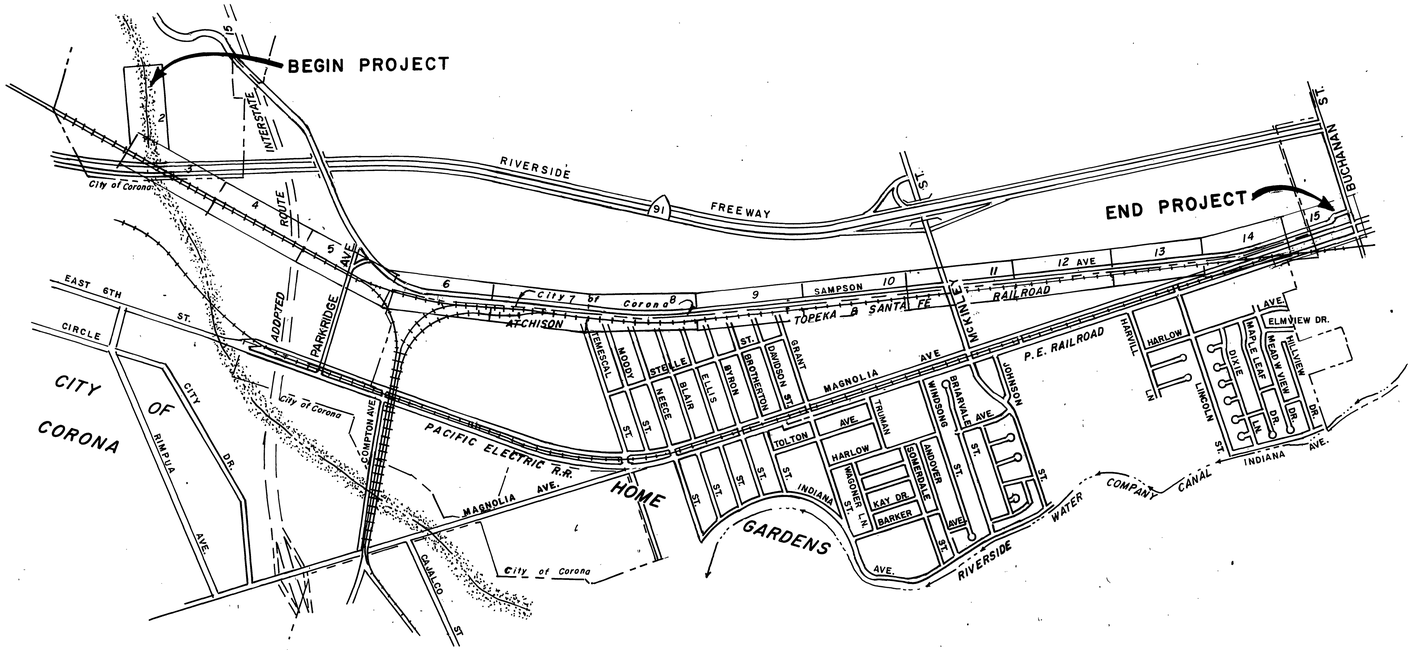

LOCATION MAP

1000' 0 1000'

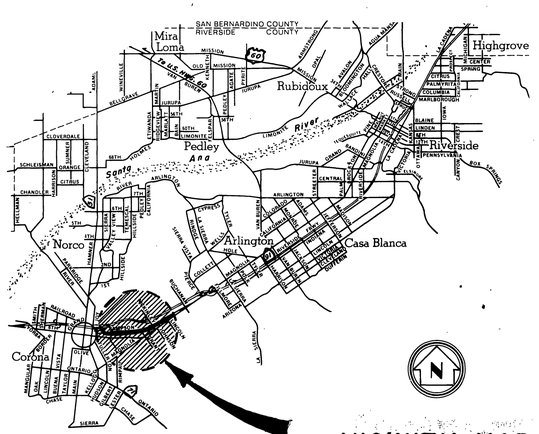

VICINITY MAP

0 1 2 3 4 5 miles

INDEX

SHEET	ITEM
1.	TITLE SHEET
1A	ABBREVATIONS AND SYMBOLS.
2-14	PLAN AND PROFILE.
15	LA SIERRA CHANNEL JUNCTION.
16-17	TEMESCAL CHANNEL JUNCTION.
18-21	CROSS - SECTIONS.
22	NOT USED
23	WALL SCHEDULE - CAST IN PLACE.
24	CUTOFF AND RAMP DETAILS AT STA. 27+05.77
25-26	DETAILS AT FREEWAY OVERPASS.
27	PARKRIDGE AVE. BRIDGE DETAILS.
28-29	McKINLEY STREET BRIDGE DETAILS.
30	PIER NOSING DETAILS. & STREET DRAINS
31	LINCOLN STREET CHANNEL JUNCTION.
32	TRANSITION TO LA SIERRA CHANNEL.
33	2 - 60" R.C.P. JUNCTION DETAILS.
34	60" R.C.P. AND 84" R.C.P. JUNCTION DETAILS.
35	SIDE INLET DETAILS; 2 - 48" R.C.P., 48" R.C.P., 48" C.M.P. & MISC. INLETS.
36	SIDE INLET DETAILS AT STA. 133+70 AND STA. 191+30.
37	HEEL DRAIN, FILTER MTL., WEEPHOLE AND BONDED CONSTRUCTION JOINT.
38	CONCRETE DROP INLET.
39	M.H. FRAME AND COVER.
40	STANDARD DROP STEP.
41	12" IRR. LINE AT McKINLEY STREET.
42	16" IRR. LINE RELOCATION STA. 182+62.4.
43	12" DOMESTIC LINE AT McKINLEY ST.
43A-43F	CITY OF RIVERSIDE STD. DRAWING.
44	HOME GARDENS OUTFALL SEWER LINE RELOCATION.
45	REINFORCED PRECAST MANHOLE.
46	STANDARD CONCRETE COLLAR.
47	PIPE BEDDING DETAIL
48	SIGNS AND MARKERS
49	CHAIN LINK FENCE DETAILS
50	CABLE BARRIER DETAILS
51	METAL BEAM RAILING
52	BULKHEADS
53	STRUCTURE PAYLINES
54-56	R.R. SPUR CROSSING
57	TRAFFIC PLAN

D-304

REVISIONS			
REF.	DESCRIPTION	APPR.	DATE

RIVERSIDE COUNTY FLOOD CONTROL AND WATER CONSERVATION DISTRICT

DESIGNED BY: W.D.G.
DRAWN BY: K.R.B
DATE DRAWN: OCT. 1974
CHECKED BY: D.M.M.

APPROVED BY: Robert W. Bryant
CHIEF ENGINEER/R.E. NO. 8822
DATE: 3-11-75

ARLINGTON STORM CHANNEL
TITLE SHEET
1970 STORM DRAIN BOND ISSUE PROJECT NO. 25

PROJECT NO. 1-0-020
DRAWING NO. 1-294
SHEET NO. 1 OF 57

AS BUILT

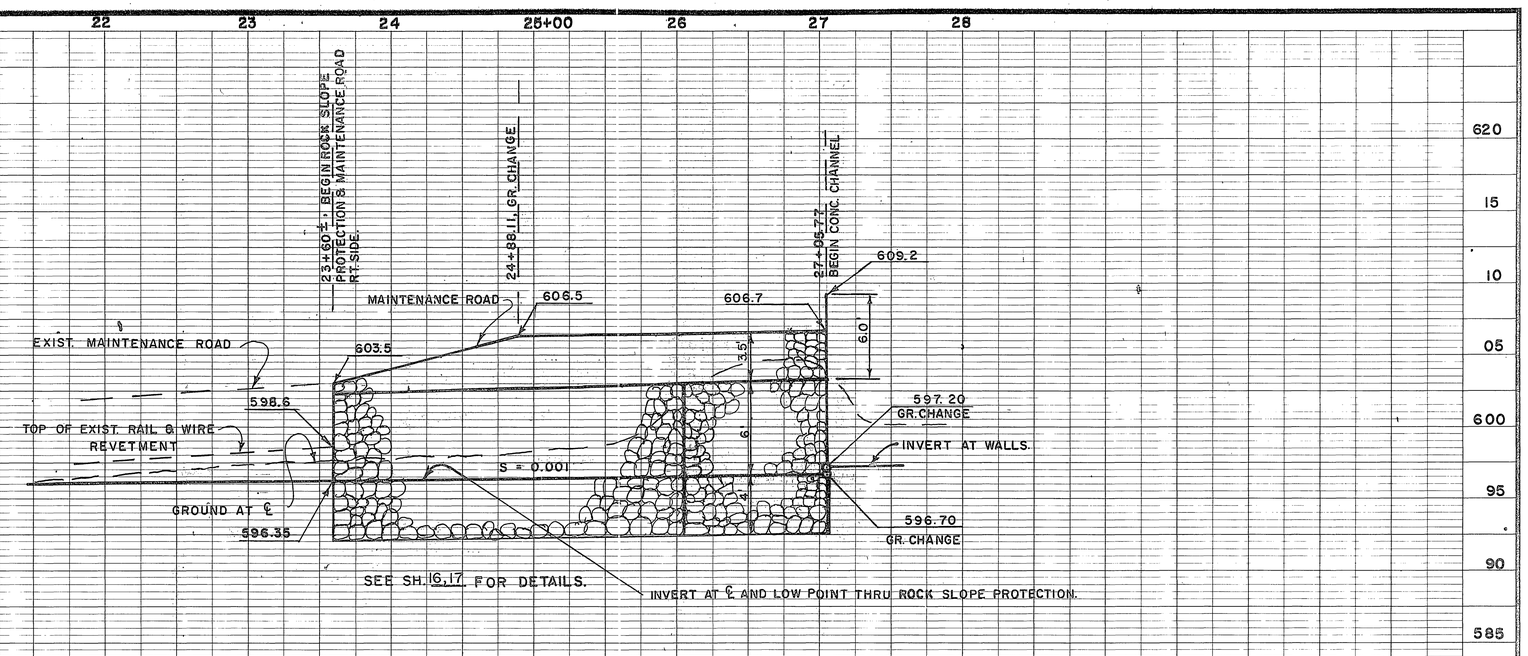

PROFILE

CONTROL TRAVERSE DATA		
CONTROL POINT	DISTANCE BETWEEN	BEARING BETWEEN
C.P. 4		
	1643.55	S 77° 34' 10 E
C.P. 8		
	1405.77	S 77 33 50 E
C.P. 10		
	850.31	S 77 44 48 E
C.P. 12		
	611.09	S 85 03 38 E
C.P. 14		
	1523.16	N 81 08 05 E
C.P. 16		
	1327.60	N 78 32 15 E
C.P. 18		
	1346.74	N 72 04 41 E
C.P. 20		
	1527.54	N 67 52 56 E
C.P. 22		
	1457.04	N 67 53 29 E
C.P. 24		
	3034.81	N 67 53 23 E
C.P. 28		
	1540.51	N 67 53 27 E
C.P. 30		
	1429.46	N 67 54 32 E
C.P. 32		

RIGHT ANGLE TIES FROM ℄ OF CHANNEL TO CONTROL POINT			
CONTROL POINT	DISTANCE BETWEEN	BEARING BETWEEN	STATION AT ℄ CHANNEL
C.P. 4	SEE - SHEET NO. 3		
C.P. 8	64.93	N12° 25' 58" E	44 + 88.22
C.P. 10	65.00	N12 25 58 E	58 + 93.99
C.P. 12	63.41	N10 51 16 E	67 + 42.55
C.P. 14	65.87	N01 26 04 W	73 + 40.95
C.P. 16	64.92	N10 02 20 W	88 + 55.49
C.P. 18	33.80	N11 30 26 W	101 + 81.86
C.P. 20	35.03	N22 06 41 W	115 + 24.74
C.P. 22	34.86	N22 06 41 W	130 + 52.28
C.P. 24	34.92	N22 06 41 W	145 + 09.32
C.P. 28	34.97	N22 06 41 W	175 + 44.13
C.P. 30	35.02	N22 06 41 W	190 + 84.63
C.P. 32	SEE - SHEET NO. 15		

NOTE
FOR DETAILS OF OUTLET SEE SHEETS 16 & 17.

℄ CURVE DATA
Δ = 20°00'00"
R = 360.00'
T = 63.48'
L = 125.66'

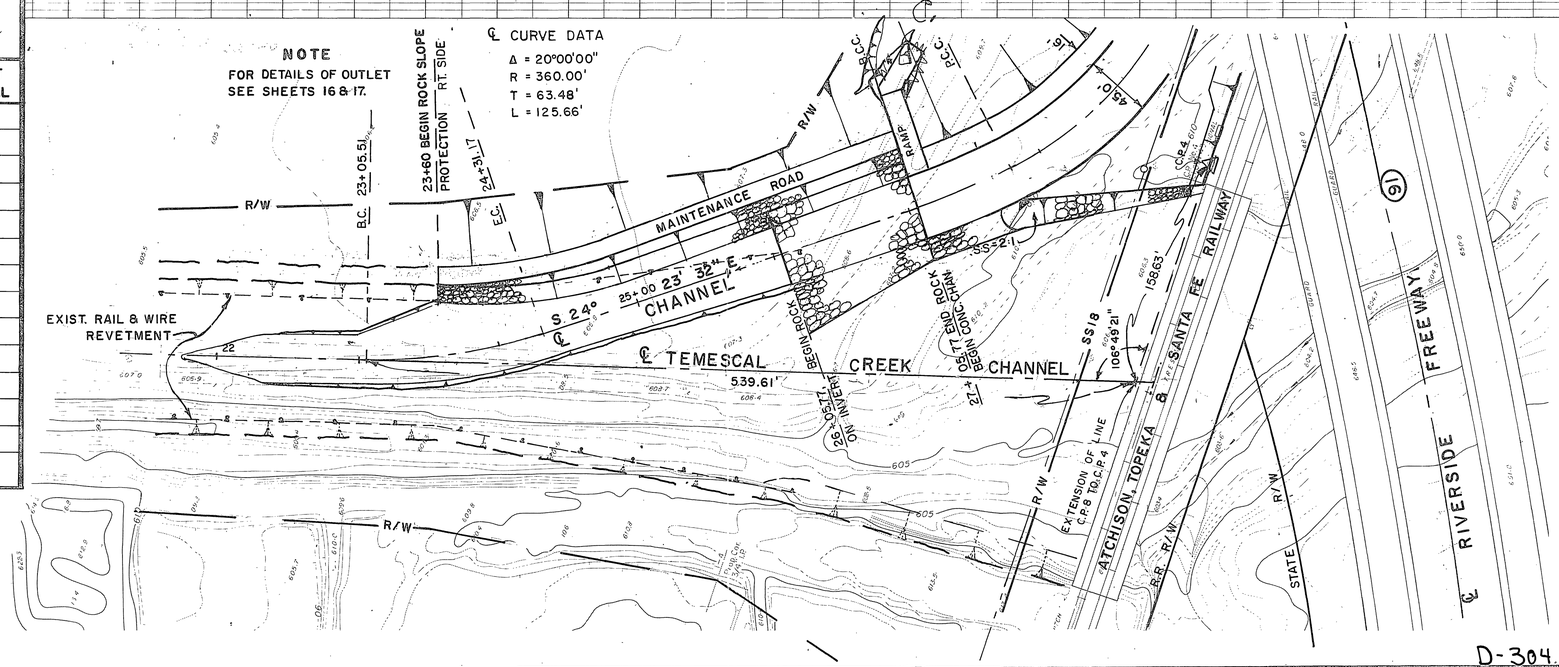

PLAN
1" = 50'
50' 0 50'

REVISIONS			
C.	Ramp Change	J.M.	11/8/71
REF.	DESCRIPTION	APPR.	DATE

RIVERSIDE COUNTY FLOOD CONTROL AND WATER CONSERVATION DISTRICT

DESIGNED BY: W. D. G.
DRAWN BY: K. R. B.
DATE DRAWN: JUNE 1974
CHECKED BY: D. M. M.
APPROVED BY: John W. Bugeant
CHIEF ENGINEER, R.E. NO. 8822
DATE: 3-11-75

ARLINGTON STORM CHANNEL
STA. 22+00± TO STA. 27+06
1970 STORM DRAIN BOND ISSUE PROJECT NO. 25

D-304.

PROJECT NO. 1-0-020
DRAWING NO. 1-294
SHEET NO. 2 OF 57

AS BUILT

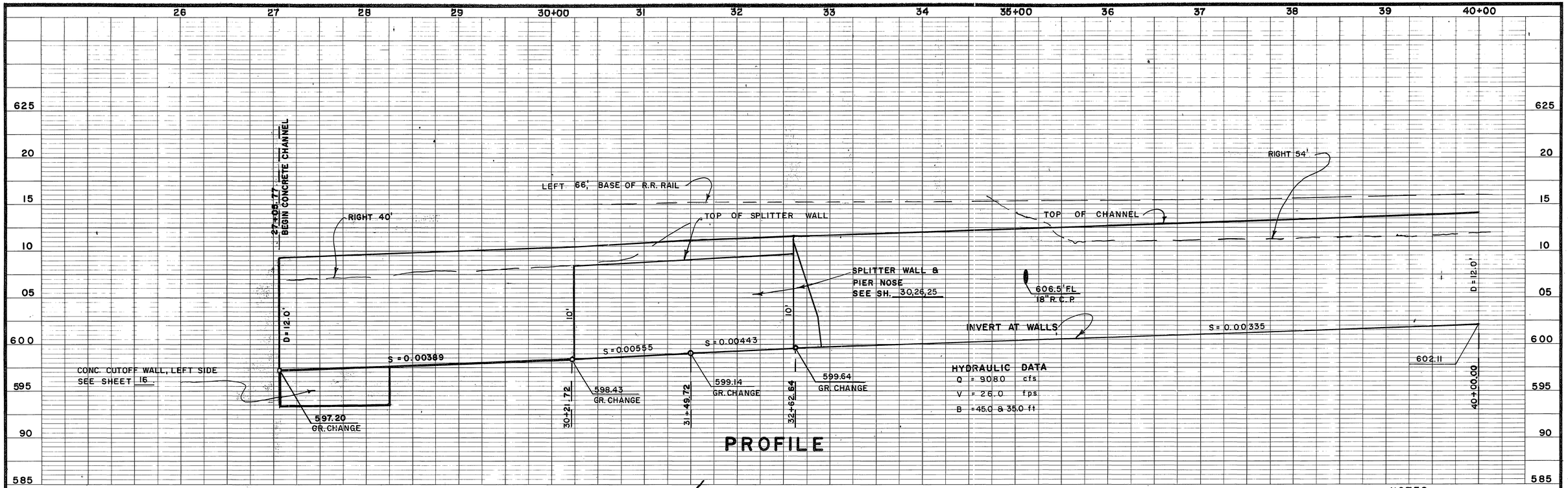

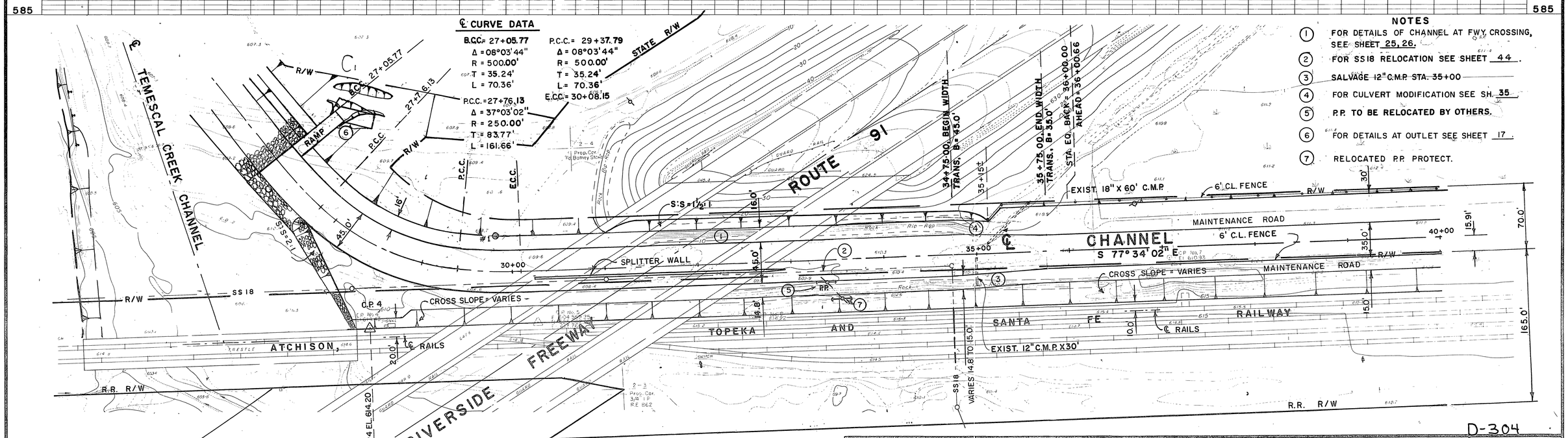

REVISIONS			
REF.	DESCRIPTION	APPR.	DATE
C1	Ramp Change	J.W.	11/5/70

RIVERSIDE COUNTY FLOOD CONTROL AND WATER CONSERVATION DISTRICT

DESIGNED BY: W.D.G.
DRAWN BY: K.R.B.
DATE DRAWN: JUNE, 1974
CHECKED BY: D.M.M

APPROVED BY: John W. Bryant
CHIEF ENGINEER-R.E. NO. 8822
DATE: 3-11-75

ARLINGTON STORM CHANNEL

STA. 27+06 TO STA. 40+00

1970 STORM DRAIN BOND ISSUE PROJECT NO. 25

D-304

PROJECT NO. 1-0-020

DRAWING NO. 1-294

SHEET NO. 3 OF 57

AS BUILT

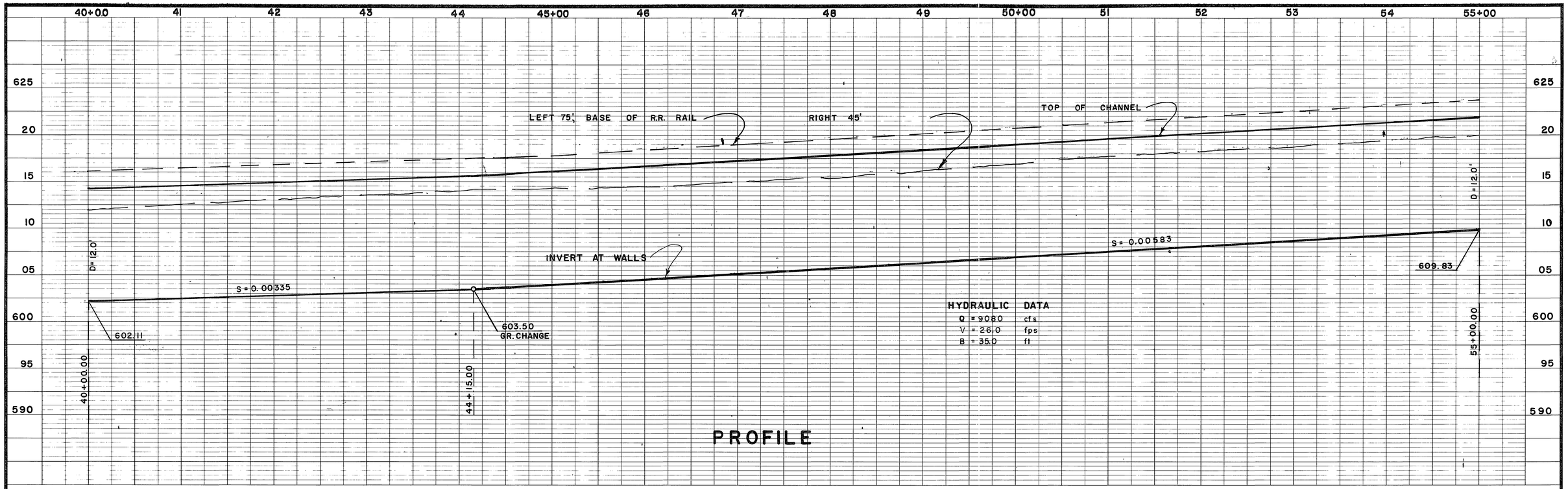

NOTE:

(1) SALVAGE 12" C.M.P. X 30' STA. 45+60.

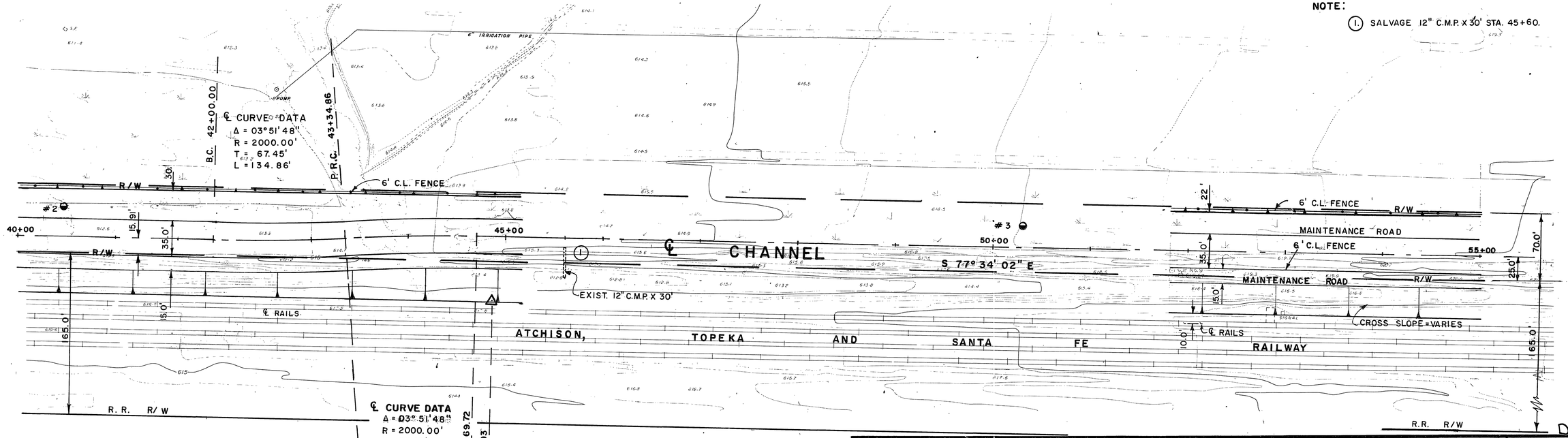

D-304

REVISIONS			
REF.	DESCRIPTION	APPR.	DATE
	No Change		

RIVERSIDE COUNTY FLOOD CONTROL AND WATER CONSERVATION DISTRICT

DESIGNED BY: W. D.G.
DRAWN BY: K. R. B.
DATE DRAWN: JUNE, 1974
CHECKED BY:

APPROVED BY: John W. Bryant
CHIEF ENGINEER R.E. NO. 8822
DATE: 3-11-75

ARLINGTON STORM CHANNEL

STA. 40+00 TO STA. 55+00

1970 STORM DRAIN BOND ISSUE PROJECT NO. 25

PROJECT NO. 1-0-020

DRAWING NO. 1-294

SHEET NO. 4 OF 57

AS BUILT

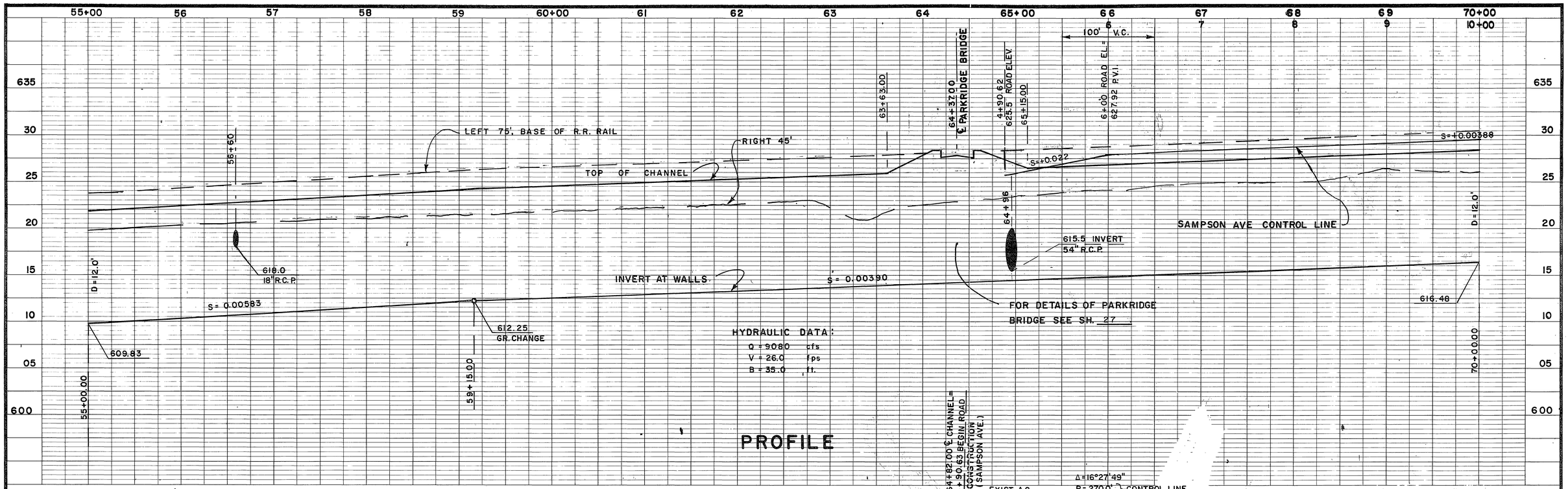

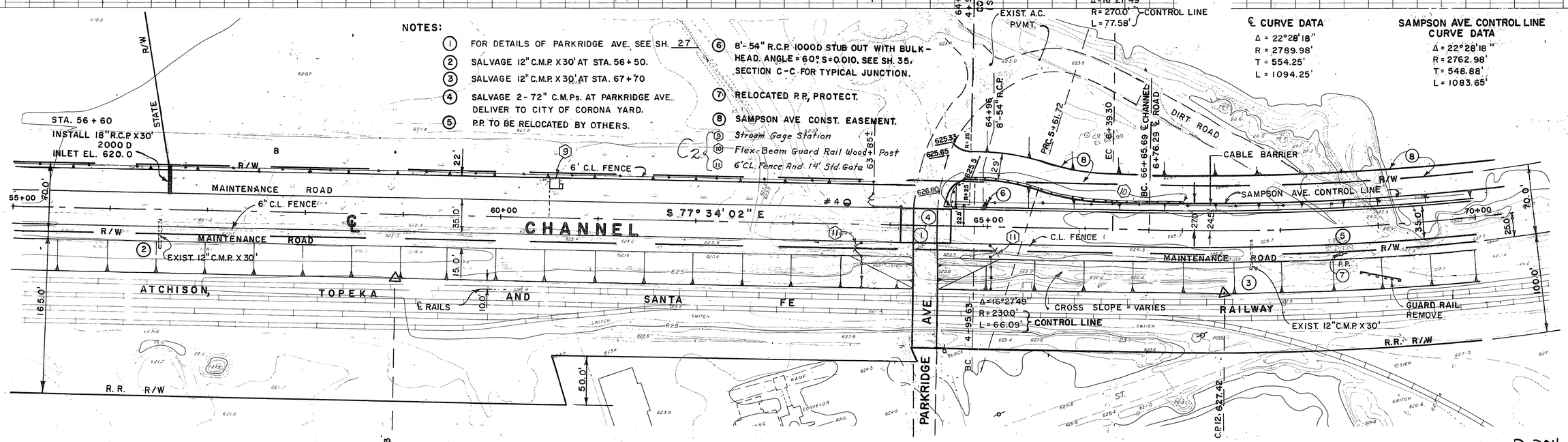

PLAN

1" = 50'

50' 0 50'

REVISIONS			
C2	Changes As Shown	AM	11/6/72
REF.	DESCRIPTION	APPR.	DATE

AS BUILT

RIVERSIDE COUNTY FLOOD CONTROL AND WATER CONSERVATION DISTRICT

DESIGNED BY: N.L.S.
DRAWN BY: K.R.B.
DATE DRAWN: JUNE, 1974
CHECKED BY:

APPROVED BY: John W. Bryant
CHIEF ENGINEER R.E. NO. 8822
DATE: 3-11-75

ARLINGTON STORM CHANNEL

STA. 55+00 TO STA. 70+00

1970 STORM DRAIN BOND ISSUE PROJECT NO. 25

D-304

PROJECT NO. 1-0-020

DRAWING NO. 1-294

SHEET NO. 5 OF 57

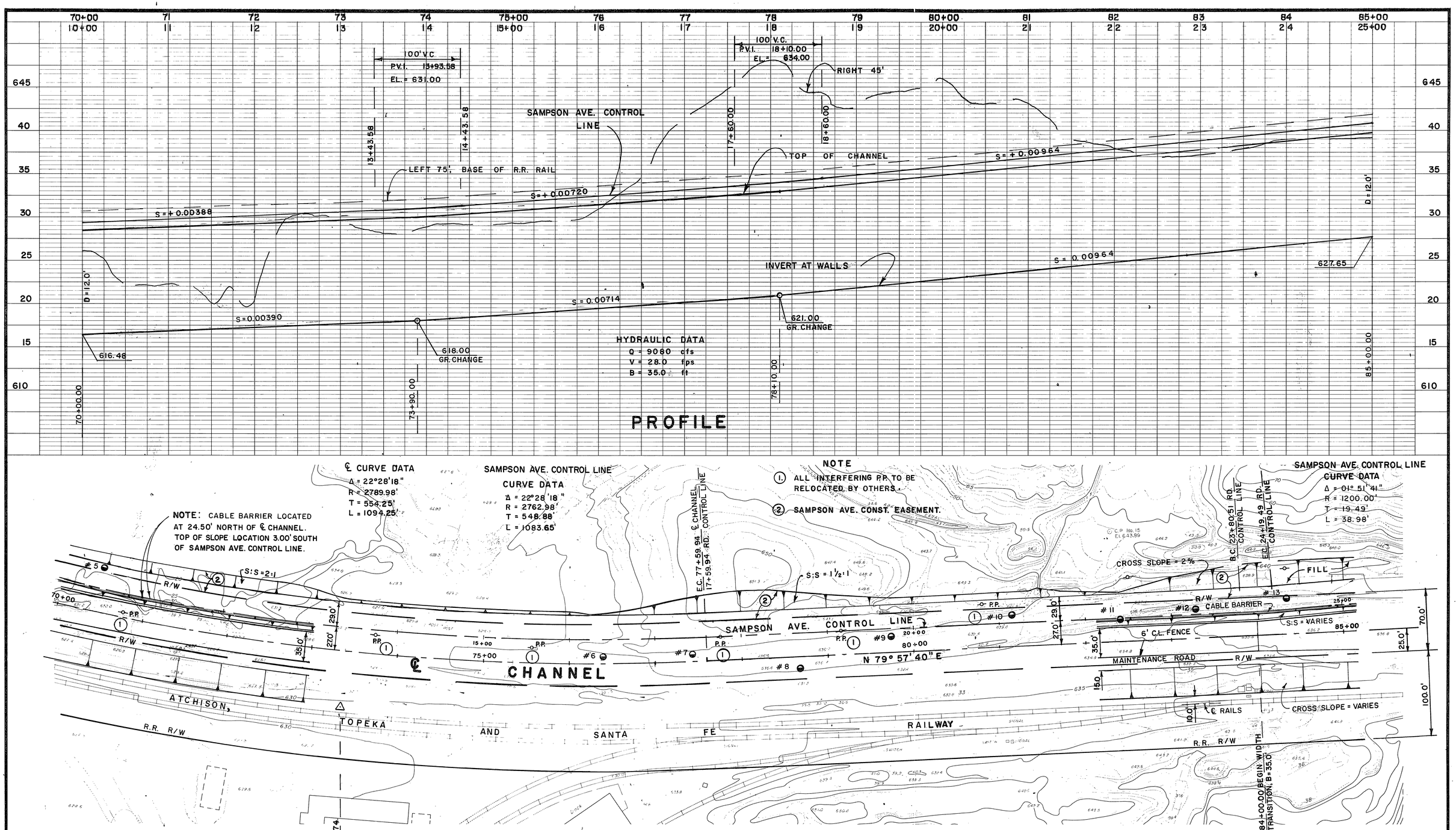

D-304

REVISIONS			
REF.	DESCRIPTION	APPR.	DATE
	No Change		

AS BUILT

RIVERSIDE COUNTY FLOOD CONTROL AND WATER CONSERVATION DISTRICT

DESIGNED BY: N.L.S.
DRAWN BY: K.R.B.
DATE DRAWN: JUNE 1974
CHECKED BY:

APPROVED BY: John W. Bryant
CHIEF ENGINEER R/E. NO. 8822
DATE: 3-11-75

ARLINGTON STORM CHANNEL

STA. 70+00 TO STA. 85+00

1970 STORM DRAIN BOND ISSUE PROJECT NO. 25

PROJECT NO. 1-0-020
DRAWING NO. 1-294
SHEET NO. 6 OF 57

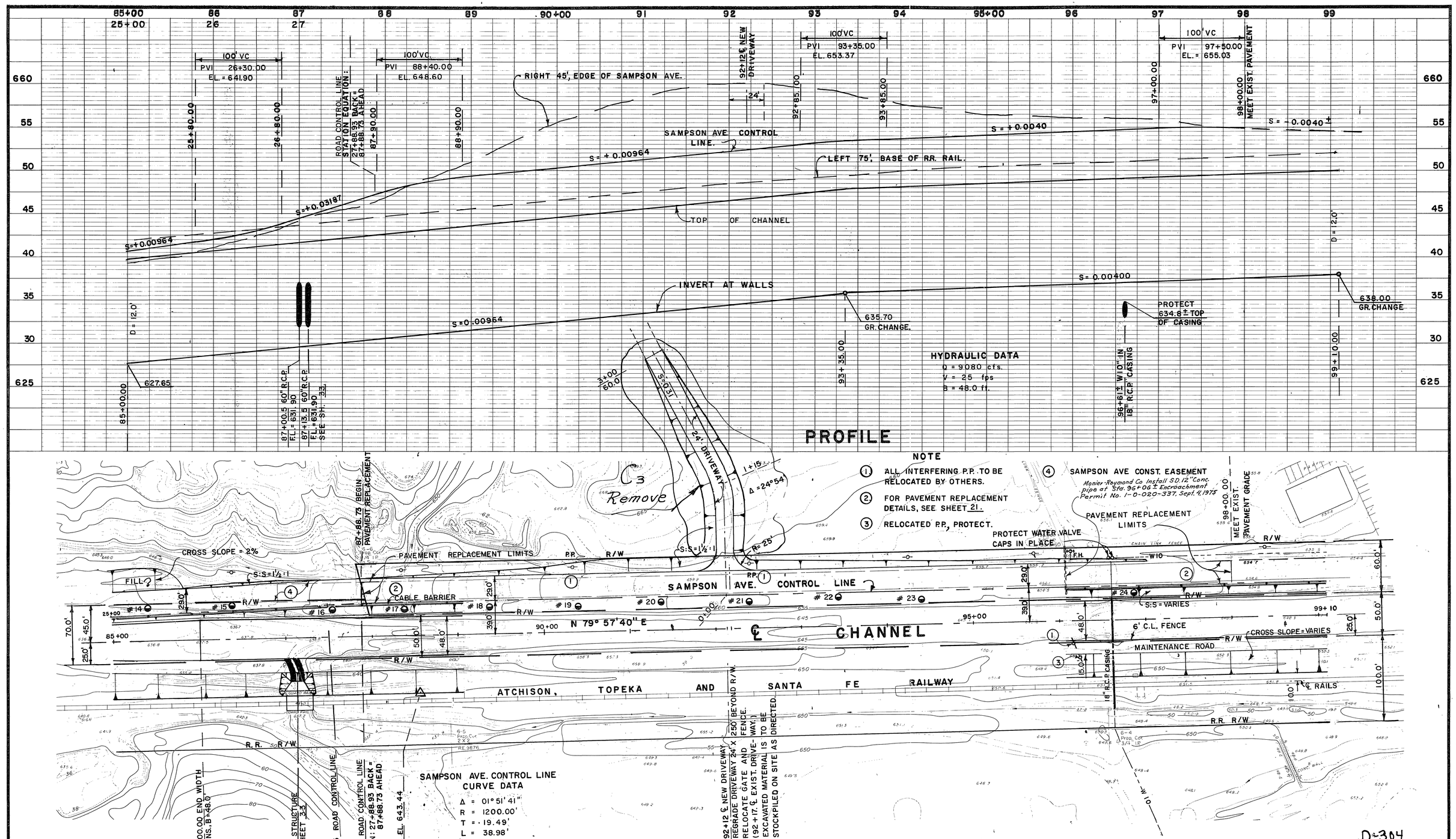

REVISIONS			
C3 REF.	Remove 24' Driveway DESCRIPTION	4/28/78 APPR.	DATE

RIVERSIDE COUNTY FLOOD CONTROL AND WATER CONSERVATION DISTRICT

DESIGNED BY: N.L.S.
DRAWN BY: K.R.B.
DATE DRAWN: JUNE 1974
CHECKED BY:

APPROVED BY: John W. Bayard
CHIEF ENGINEER R/E. NO. 8822
DATE: 3-11-75

ARLINGTON STORM CHANNEL

STA. 85+00 TO STA. 99+10

1970 STORM DRAIN BOND ISSUE PROJECT NO. 25

PROJECT NO. 1-0-020
DRAWING NO. 1-294
SHEET NO. 7 OF 57

AS BUILT

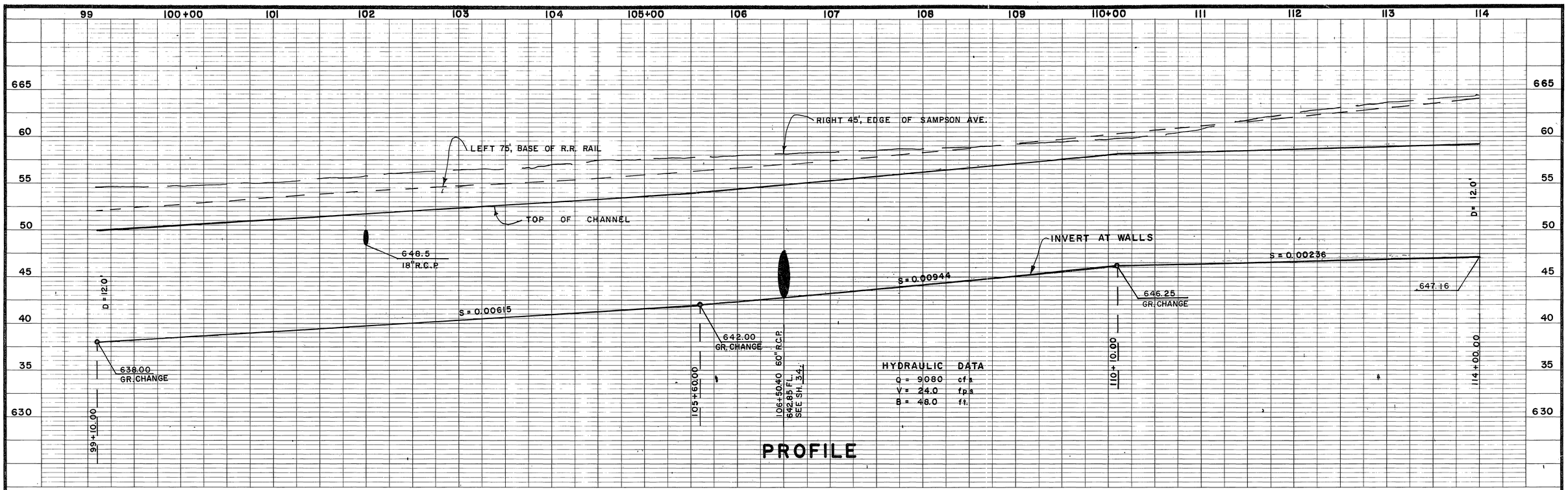

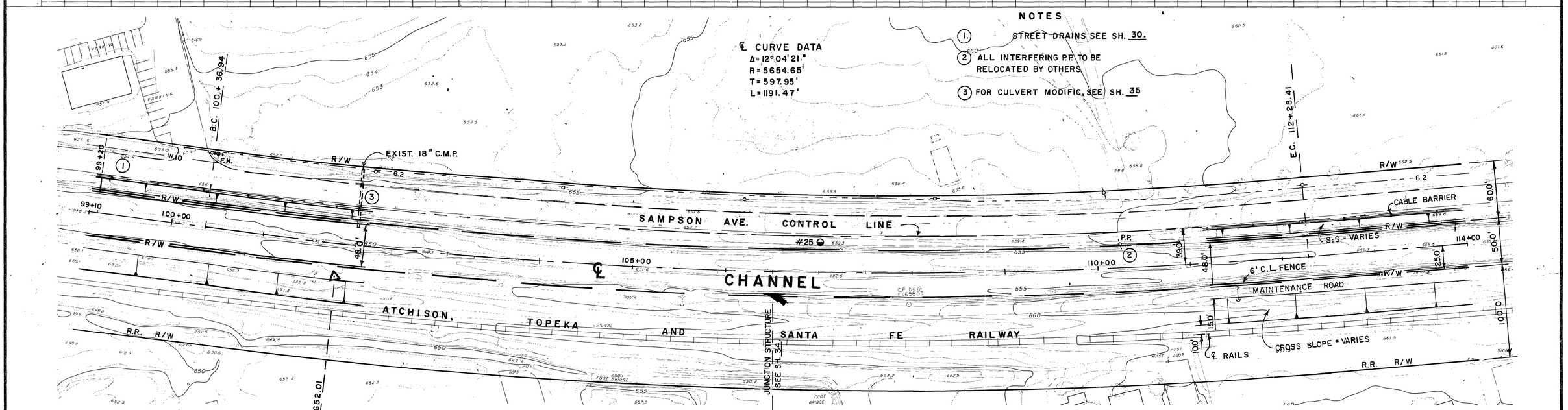

D-304

REVISIONS			
REF.	DESCRIPTION	APPR.	DATE
	No Change		

AS BUILT

RIVERSIDE COUNTY FLOOD CONTROL AND WATER CONSERVATION DISTRICT

DESIGNED BY: W. D.G.
DRAWN BY: K.R.B.
DATE DRAWN: JUNE, 1974
CHECKED BY:

APPROVED BY: John W. Buzard
CHIEF ENGINEER R.E. NO. 8822
DATE: 3-11-75

ARLINGTON STORM CHANNEL

STA. 99+10 TO STA. 114+00

1970 STORM DRAIN BOND ISSUE PROJECT NO. 25

PROJECT NO. 1-0-020
DRAWING NO. 1-294
SHEET NO. 8 OF 57

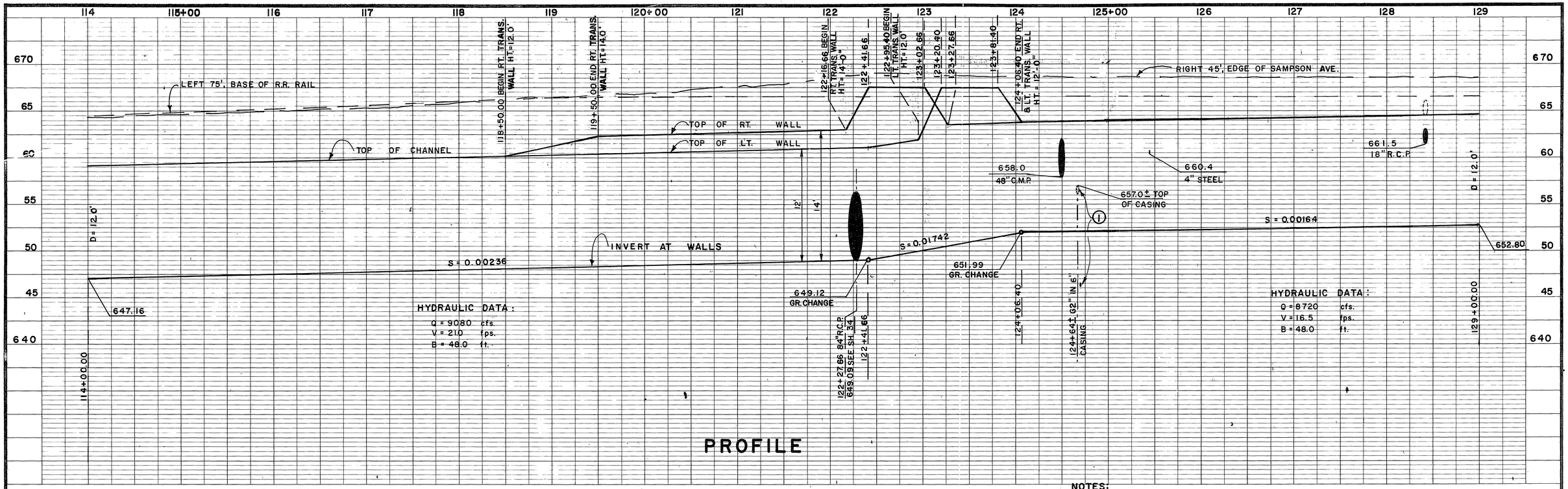

NOTES CONTINUED

6. STREET DRAINS SEE SHEET 30.
7. CULVERT MODIFICATION SEE SHEET 35.
8. RELOCATE STEEL R.R. CROSSING SIGN AS DIRECTED.

NOTES:

1. 2" H.P. GAS LINE TO BE LOWERED BY OTHERS PRIOR TO CONSTRUCTION. REMOVE INTERFERING PORTIONS OF EXISTING 6" CASING AND 2" PIPE. NEW LINE WILL NOT HAVE CASING.
2. FOR RECONSTRUCTION OF R.R. SPUR CROSSING SEE SH. 54-56.
3. FOR 48" C.M.P. INLET SEE SH. 35. CAUTION – GAS LINE.
4. CUT 6" STEEL PIPE AT FACE OF CHANNEL.
5. REMOVE R.R. CONC. ABUTMENTS, PIERS & BRIDGE.

CONTINUE NOTES-LEFT SIDE

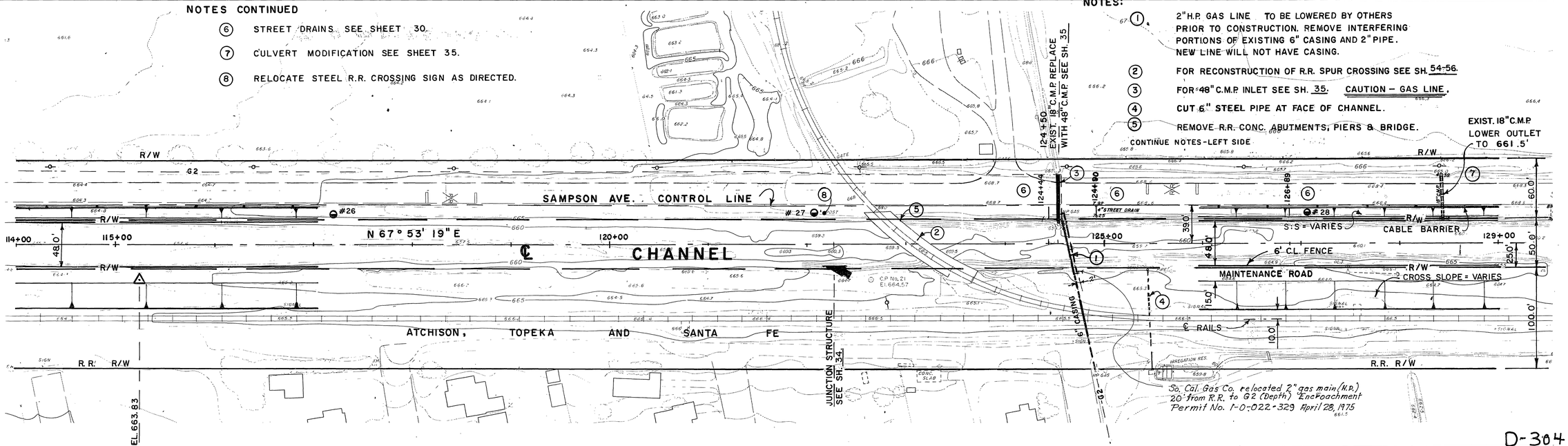

So. Cal. Gas Co. relocated 2" gas main (H.P.) 20' from R.R. to G2 (Depth) Encroachment Permit No. 1-0-022-329 April 28, 1975

D-304

PLAN

1" = 50'

50' 0 50'

REVISIONS			
REF.	DESCRIPTION	APPR.	DATE
	No Change		

AS BUILT

RIVERSIDE COUNTY FLOOD CONTROL AND WATER CONSERVATION DISTRICT

DESIGNED BY: W.D.G.
DRAWN BY: K.R.B.
DATE DRAWN: JUNE, 1974
CHECKED BY: D.M.M.

APPROVED BY: Arthur W. Bryant
CHIEF ENGINEER R.E. NO. 8822
DATE: 3-11-75

ARLINGTON STORM CHANNEL

STA. 114+00 TO STA. 129+00

1970 STORM DRAIN BOND ISSUE PROJECT NO. 25

PROJECT NO. 1-0-020
DRAWING NO. 1-294
SHEET NO. 9 OF 57

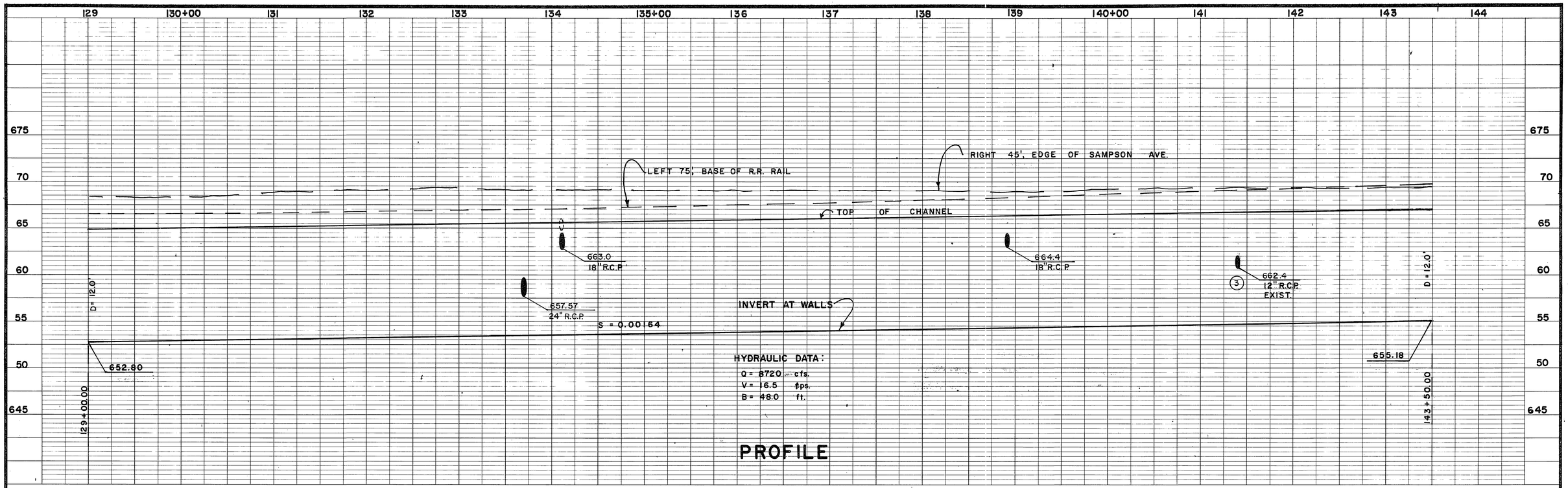

NOTES

1. STREET DRAIN. SEE SH. 30.
2. FOR CULVERT MODIFICATION SEE SH. 35.
3. CUT 12" R.C.P. AT FACE OF CHANNEL.

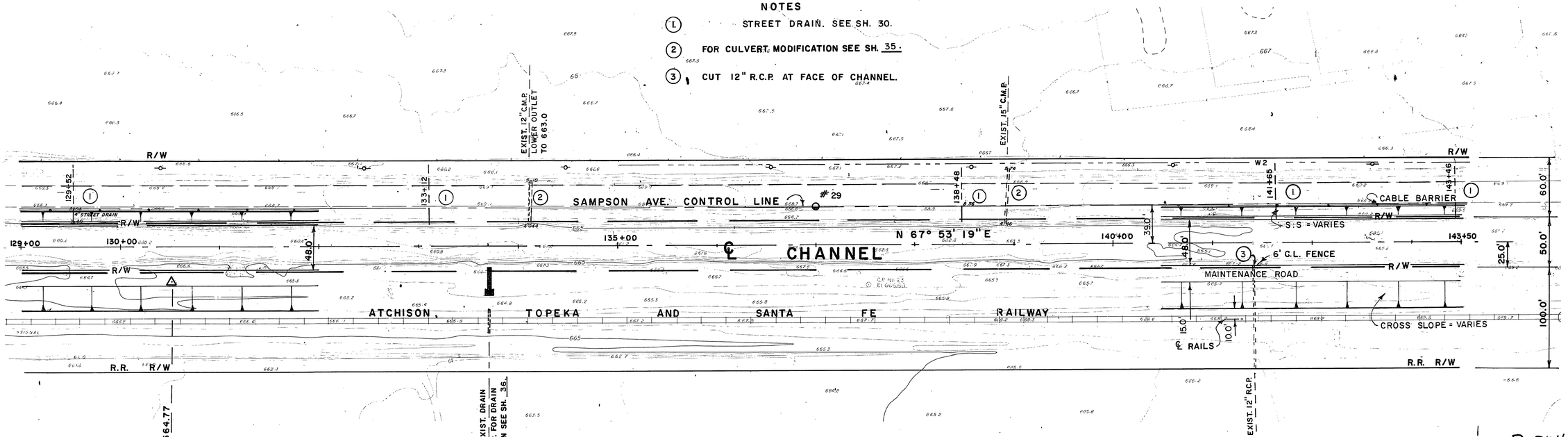

PLAN

1" = 50'

REVISIONS			
REF.	DESCRIPTION	APPR.	DATE
	No Change		

AS BUILT

RIVERSIDE COUNTY FLOOD CONTROL AND WATER CONSERVATION DISTRICT

DESIGNED BY: W.D.G.
DRAWN BY: K.R.B.
DATE DRAWN: JUNE, 1974
CHECKED BY:

APPROVED BY: John W. Bergquist
CHIEF ENGINEER R.E. NO. 8822
DATE: 3-11-75

ARLINGTON STORM CHANNEL

STA. 129+00 TO STA. 143+50

1970 STORM DRAIN BOND ISSUE PROJECT NO. 25

D-304

PROJECT NO. 1-0-020

DRAWING NO. 1-294

SHEET NO. 10 OF 57

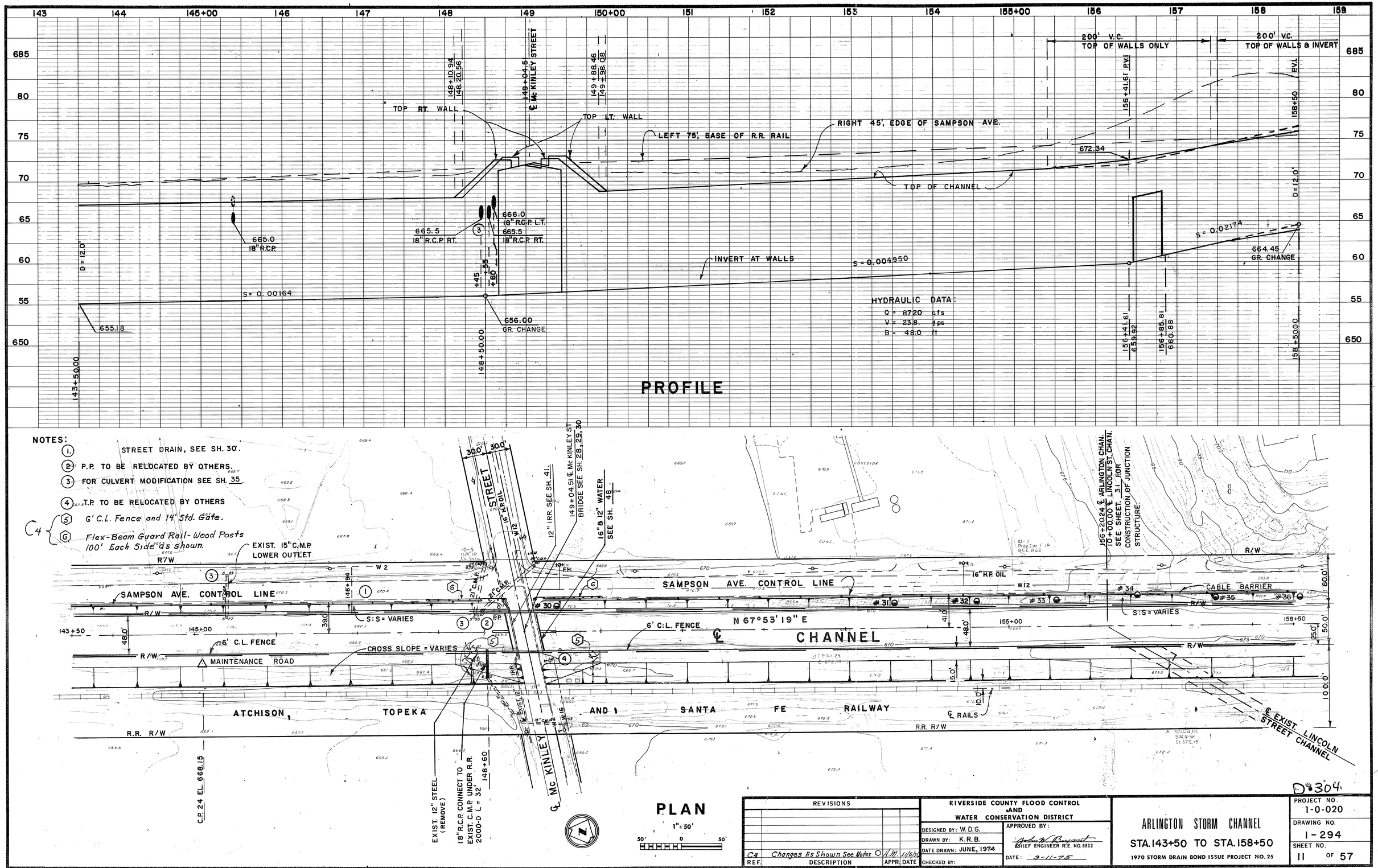

REVISIONS			
C4	Changes As Shown See Notes	A.M.	11/5/76
REF.	DESCRIPTION	APPR.	DATE

AS BUILT

RIVERSIDE COUNTY FLOOD CONTROL AND WATER CONSERVATION DISTRICT

DESIGNED BY: W.D.G.
DRAWN BY: K.R.B.
DATE DRAWN: JUNE, 1974
CHECKED BY:
APPROVED BY: John W. Bregant, CHIEF ENGINEER R.E. NO. 8822
DATE: 3-11-75

ARLINGTON STORM CHANNEL
STA. 143+50 TO STA. 158+50
1970 STORM DRAIN BOND ISSUE PROJECT NO. 25

PROJECT NO. 1-0-020
DRAWING NO. 1-294
SHEET NO. 11 OF 57

D-304

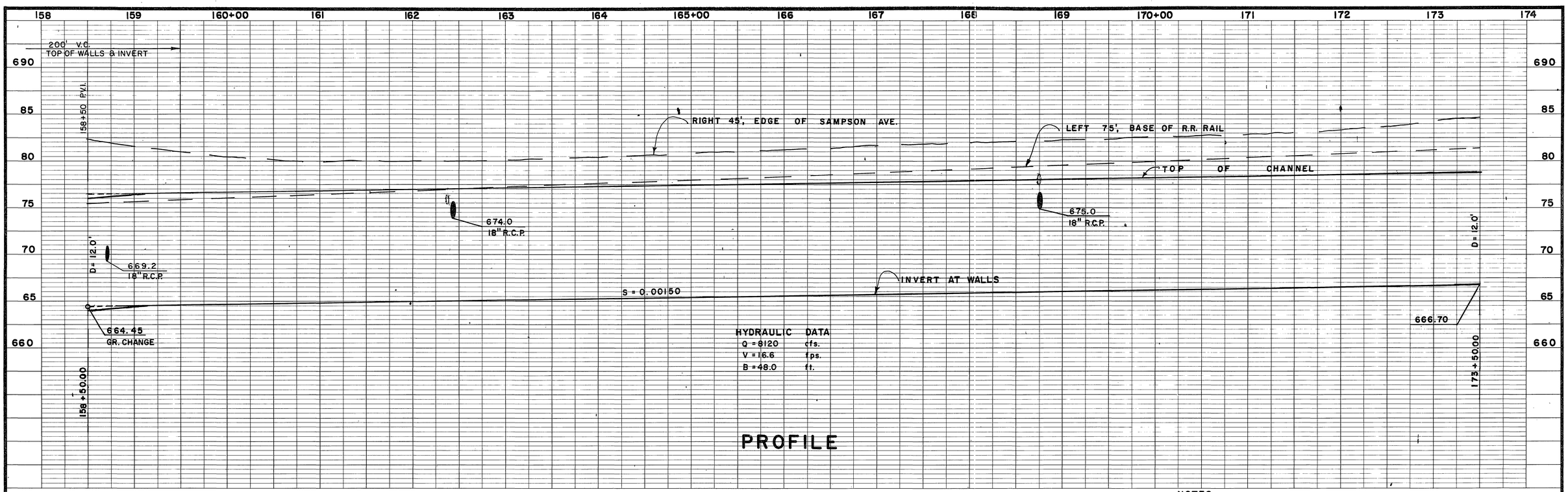

NOTES

(2) CULVERT MODIFICATION SEE SH. 35.

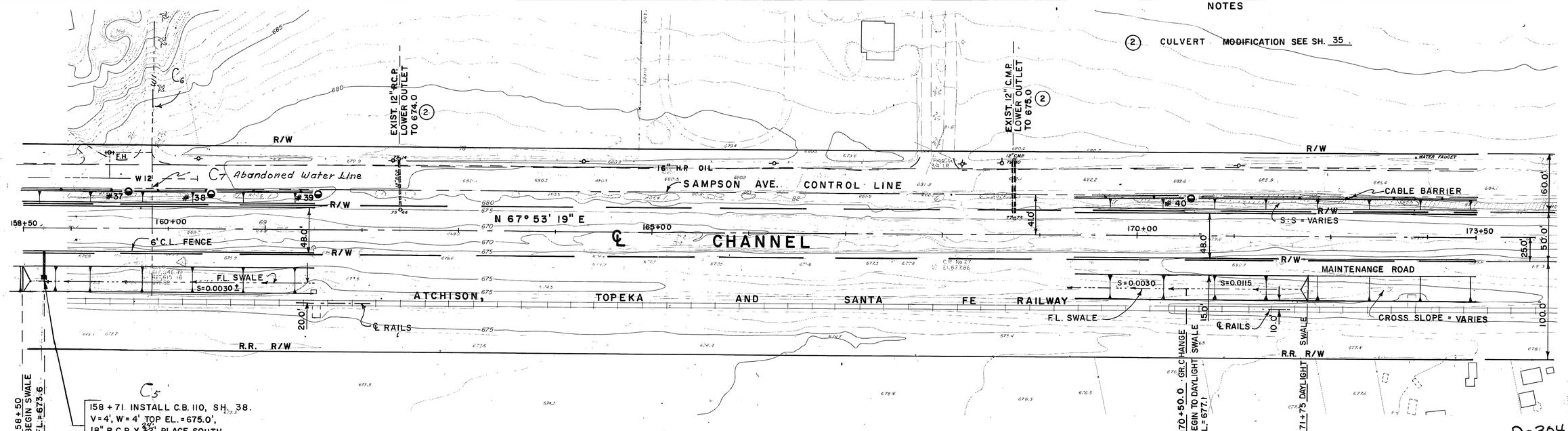

D-304

PLAN

1" = 50'

50' 0 50'

REVISIONS			
C7	Abandoned Water Line	J.M.	11/5/74
C6	W.I. Found — as shown	J.M.	11/5/74
C5	18" R.C.P. Length changed	J.M.	11/5/74
REF.	DESCRIPTION	APPR.	DATE

AS BUILT

RIVERSIDE COUNTY FLOOD CONTROL AND WATER CONSERVATION DISTRICT

DESIGNED BY: W.D.G.
DRAWN BY: K.R.B.
DATE DRAWN: JUNE, 1974
CHECKED BY:

APPROVED BY: John W. Bernard
CHIEF ENGINEER R.E. NO. 8822
DATE: 3-11-75

ARLINGTON STORM CHANNEL

STA. 158+50 TO STA. 173+50

1970 STORM DRAIN BOND ISSUE PROJECT NO. 25

PROJECT NO. 1-0-020
DRAWING NO. 1-294
SHEET NO. 12 OF 57

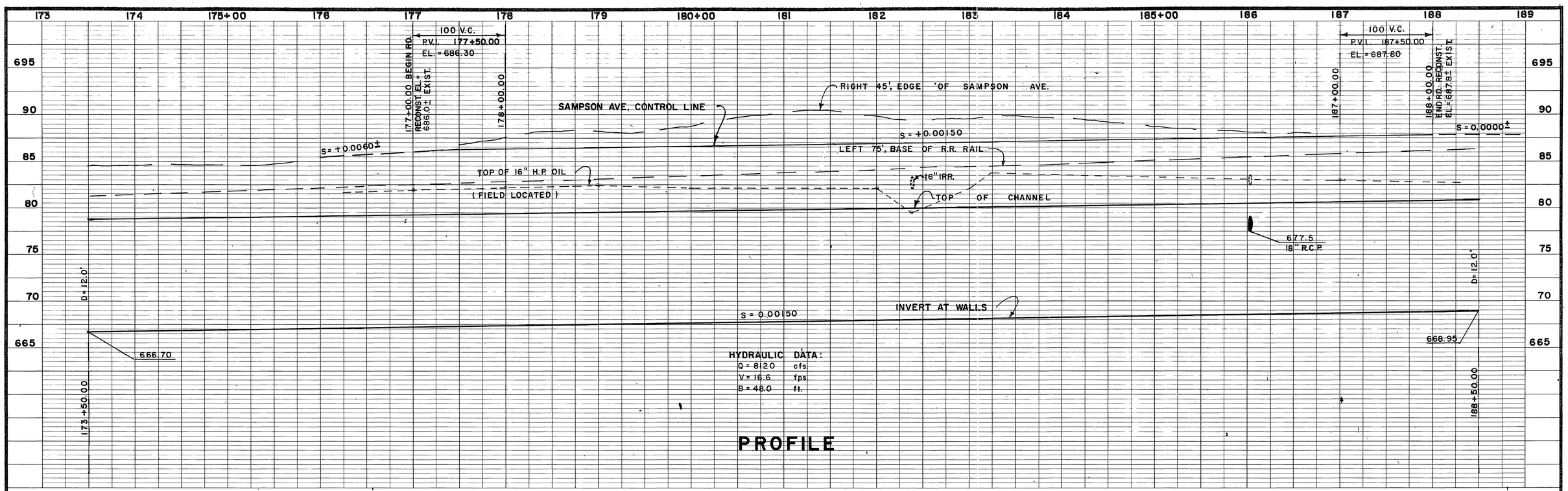

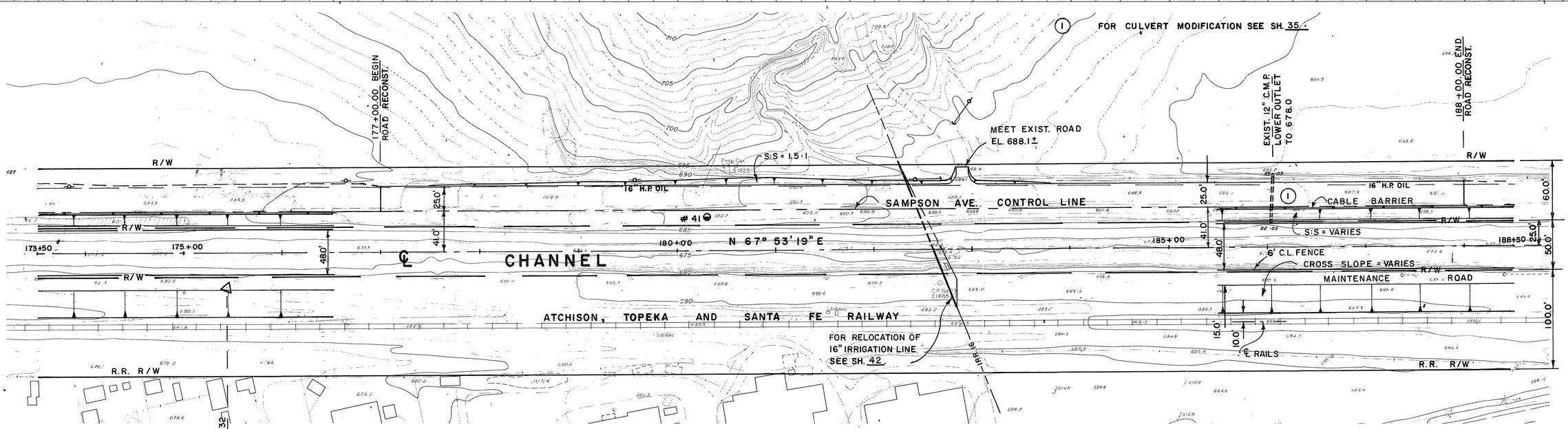

PLAN

1" = 50'

50' 0 50'

REVISIONS			
REF.	DESCRIPTION	APPR.	DATE
	No Change		

RIVERSIDE COUNTY FLOOD CONTROL AND WATER CONSERVATION DISTRICT

DESIGNED BY: W.D.G.
DRAWN BY: K.R.B.
DATE DRAWN: JUNE, 1974
CHECKED BY:

APPROVED BY: John W. Bryant
CHIEF ENGINEER R.E. NO. 8822
DATE: 3-11-75

ARLINGTON STORM CHANNEL

STA. 173+50 TO STA. 188+50

1970 STORM DRAIN BOND ISSUE PROJECT NO. 25

D-304

PROJECT NO. 1-0-020

DRAWING NO. 1-294

SHEET NO. 13 OF 57

AS BUILT

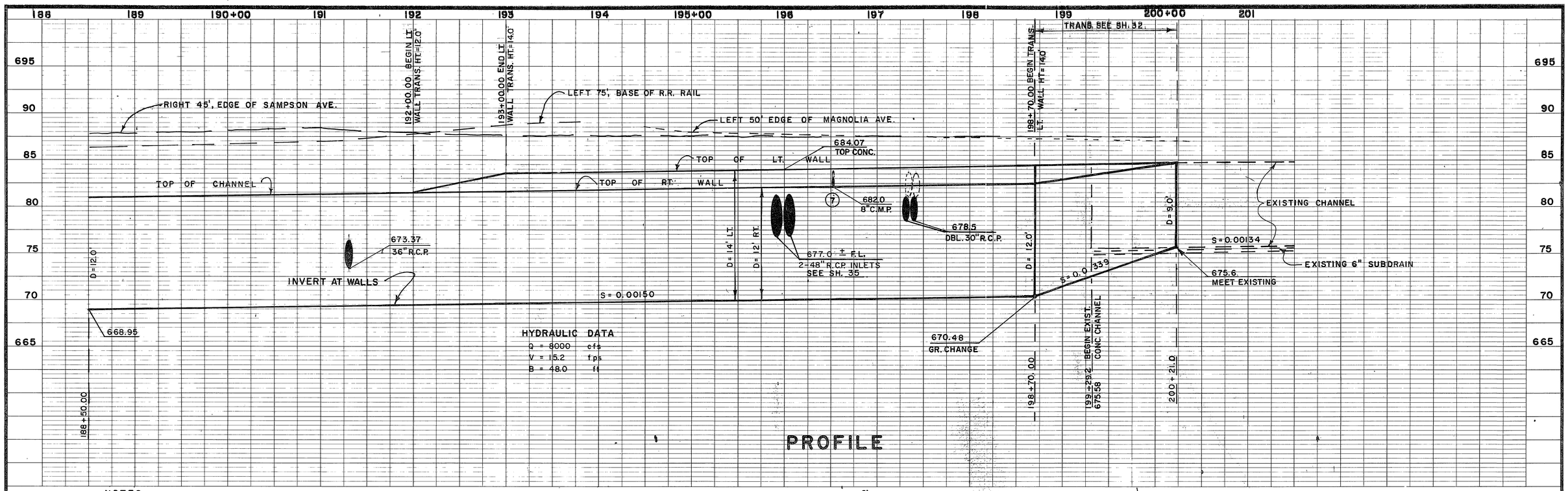

NOTES

1. REMOVE ABND. CONC. RAILROAD STRUCTURE.
2. LOCATE 6' C.L. FENCE ADJACENT TO CONC. CHANNEL. SEE SHEETS 20, 21, 32, FOR FENCE & METAL BEAM BARRIER.
3. P.P. TO BE RELOCATED BY OTHER.
4. FOR CULVERT MODIFICATION SEE SH. 35.
5. 6" I.D. SUB DRAINS.
6. SALVAGE U.S.C. & G.S. BRASS DISK TO DISTRICT.
7. CUT 8" C.M.P. AT FACE OF CHANNEL.
8. RELOCATED P.P., PROTECT.
9. REMOVE STUMPS.
10. 6' C.L. Fence and 14' Std Gate.

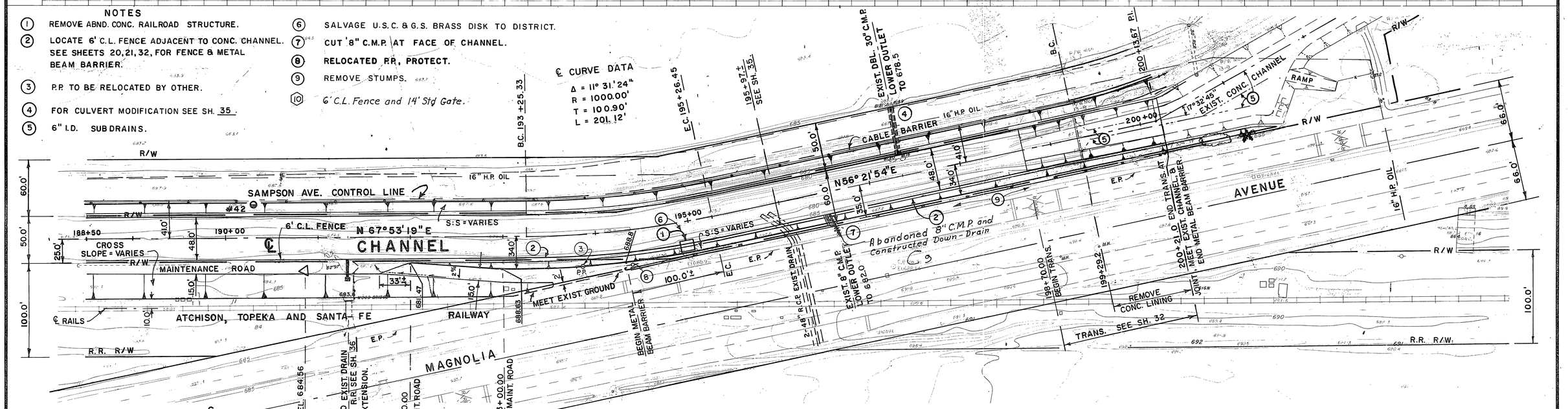

REVISIONS			
C9	Downdrain-Const.	A.M.	11/5/74
C8	Add 6' CL Fence & 14' Std Gate	A.M.	11/5/74
REF.	DESCRIPTION	APPR.	DATE

RIVERSIDE COUNTY FLOOD CONTROL AND WATER CONSERVATION DISTRICT

DESIGNED BY: W.D.G.
DRAWN BY: K.R.B.
DATE DRAWN: JUNE, 1974
CHECKED BY:

APPROVED BY: John W. Beresford
CHIEF ENGINEER R.E. NO. 8822
DATE: 3-11-75

ARLINGTON STORM CHANNEL

STA. 188+50 TO STA. 200+21.6

1970 STORM DRAIN BOND ISSUE PROJECT NO. 25

D-304

PROJECT NO. 1-0-020

DRAWING NO. 1-294

SHEET NO. 14 OF 57

AS BUILT

SAMPSON AVE. CONTROL LINE
CURVE DATA
Δ = 17°32'45"
R = 506.00'
T = 78.09'
L = 154.95'

CABLE BARRIER
CURVE DATA
Δ = 17°32'45"
R = 820.16'
T = 126.57'
L = 251.16'

NOTES:

1. 6' C.L. FENCE ON EXISTING PARAPET, SEE SH. 49.
2. 6' C.L. FENCE LOCATED ADJACENT TO CONC. CHANNEL. SEE SH. 20, 21, 32 FOR FENCE & METAL BEAM BARRIER.
3. FOR 6' C.L. FENCE, CABLE BARRIER & ANCHOR SEE SH. 50.
4. 14' GATE SEE SH. 49.
5. 6" I.D. SUBDRAINS.

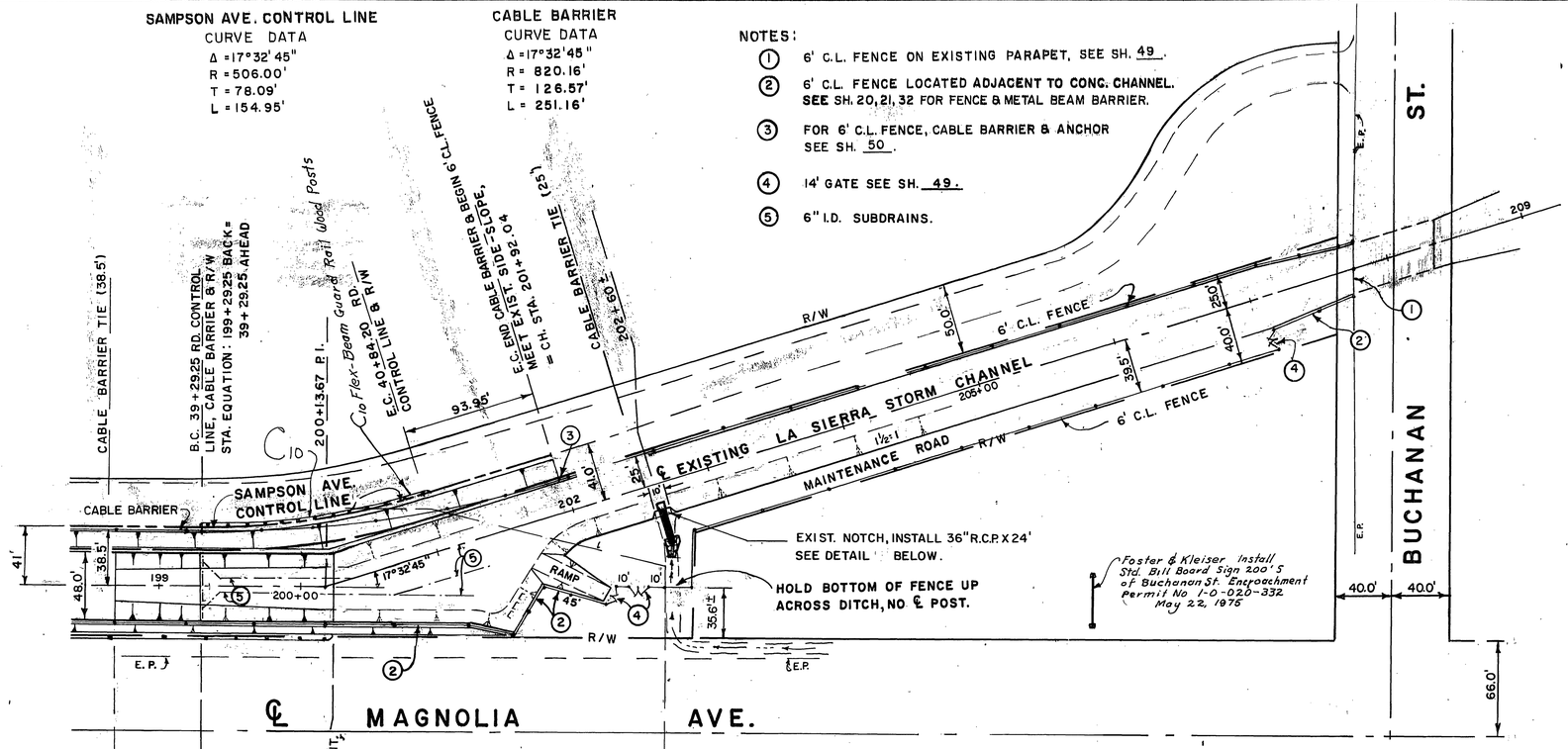

NOTE

INSTALL GUIDE MARKERS ADJACENT TO CABLE BARRIER AND CHAIN LINK FENCE ALONG SAMPSON AVE. AT APPROX. 200' INTERVALS. BEGIN AT STA. 65+00, END AT STA. 207+00.

PLAN

50' 0 50'

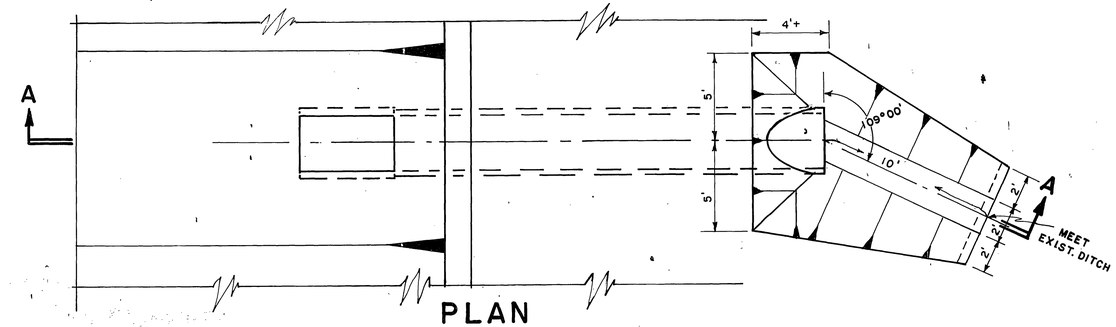

PLAN

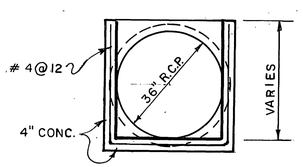

SECTION B-B

NO SCALE

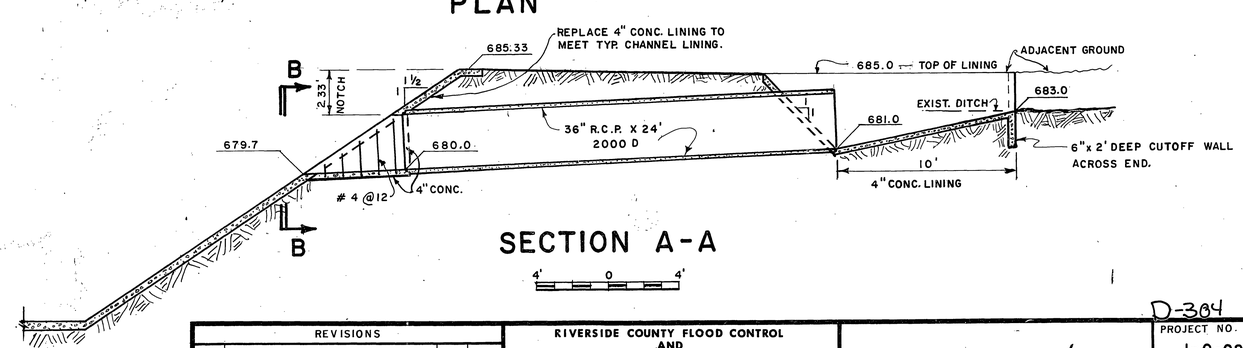

SECTION A-A

4' 0 4'

D-304

REVISIONS			
C10	Add - F.B. Guard Rail as shown	D.M.	11/5/76
REF.	DESCRIPTION	APPR.	DATE

AS BUILT

RIVERSIDE COUNTY FLOOD CONTROL AND WATER CONSERVATION DISTRICT

DESIGNED BY: W.D.G.
DRAWN BY: K.R.B.
DATE DRAWN: DEC. 1973
CHECKED BY: D.M.M.
APPROVED BY: John W. Bryant
CHIEF ENGINEER R.E. NO. 8822
DATE: 2-11-75

ARLINGTON STORM CHANNEL
LA SIERRA CHANNEL JUNCTION
1970 STORM DRAIN BOND ISSUE PROJECT NO. 25

PROJECT NO. 1-0-020
DRAWING NO. 1-294
SHEET NO. 15 OF 57

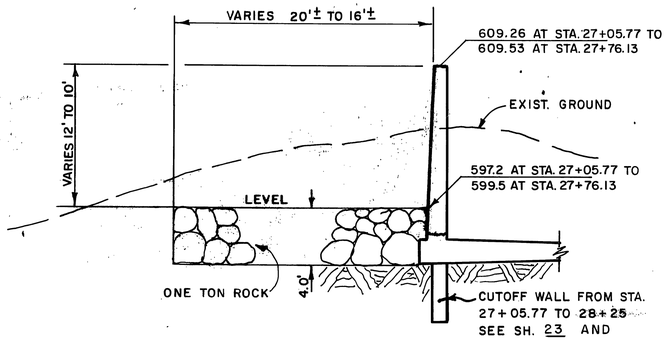

SECTION A-A

SEE SH. 17

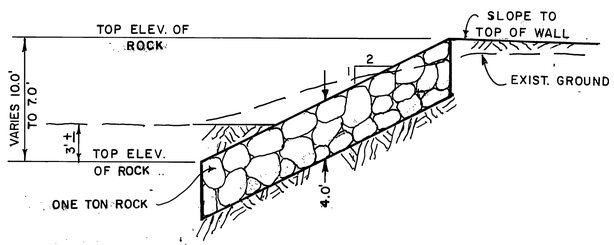

SECTION B-B

SEE SH. 17

TYPICAL SCALE

5' 0 5'

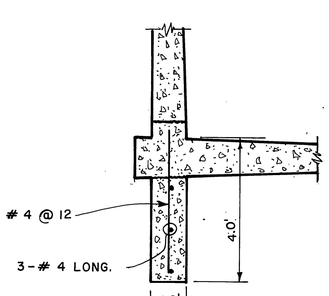

DETAIL "A"

CUTOFF WALL

NO SCALE

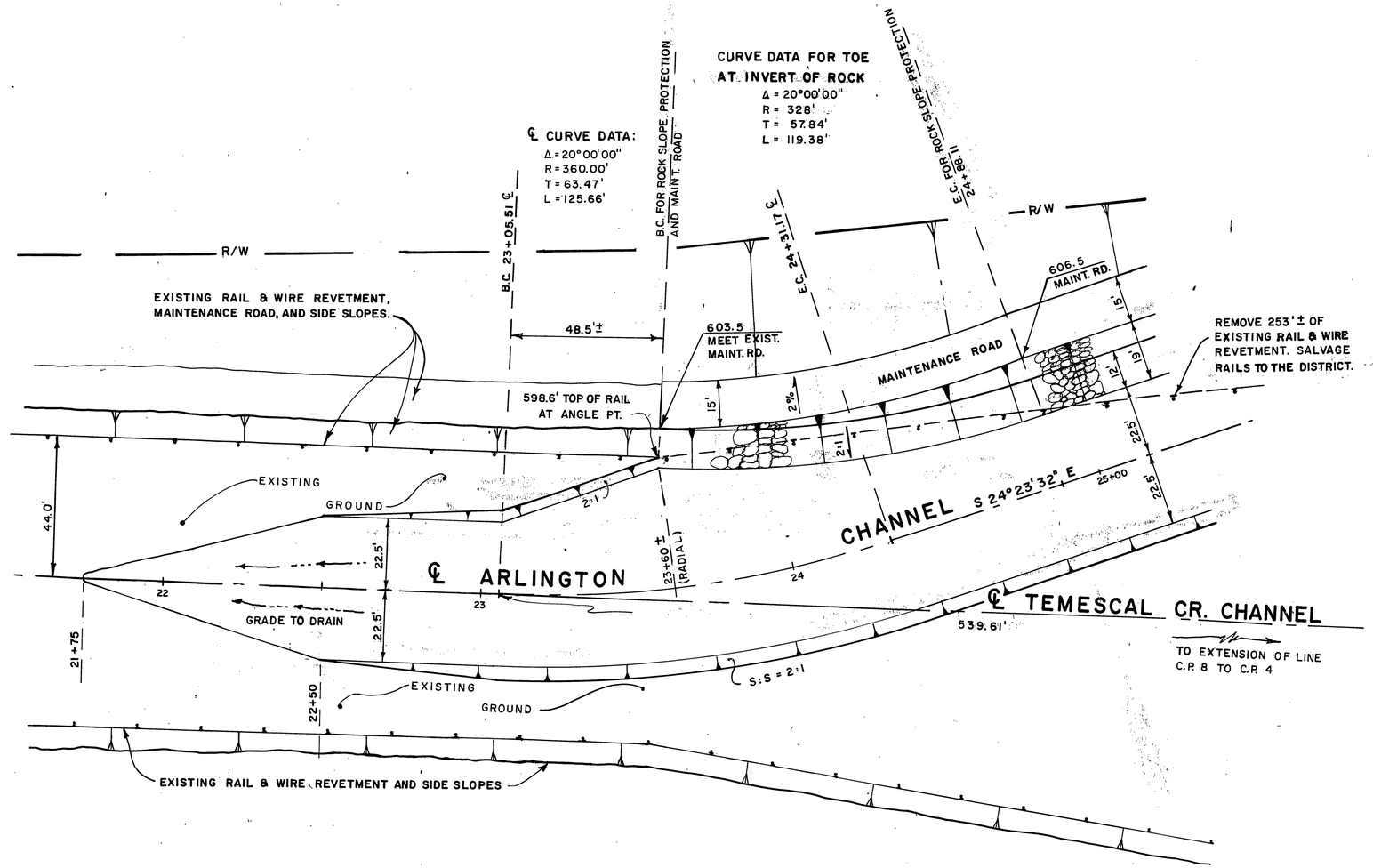

PLAN

1" = 20'

20' 0 20'

REVISIONS			
REF.	DESCRIPTION	APPR.	DATE

No Change

AS BUILT

RIVERSIDE COUNTY FLOOD CONTROL AND WATER CONSERVATION DISTRICT

DESIGNED BY: W.D.G.
DRAWN BY: K.R.B.
DATE DRAWN: DEC. 1973
CHECKED BY: D.M.M.

APPROVED BY: John W. Bryant
CHIEF ENGINEER R.E. NO. 8822
DATE: 3-11-75

ARLINGTON STORM CHANNEL
TEMESCAL CREEK CHANNEL JUNCTION
1970 STORM DRAIN BOND ISSUE PROJECT NO. 25

D-304

PROJECT NO. 1-0-020
DRAWING NO. 1-294
SHEET NO. 16 OF 57

℄ CURVE DATA

(A) Δ = 08° 03' 44"
R = 500.00'
T = 35.24'
L = 70.36'

(B) Δ = 37° 03' 02"
R = 250.00'
T = 83.77'
L = 161.66'

(C) Δ = 08° 03' 44"
R = 500.00'
T = 35.24'
L = 70.36'

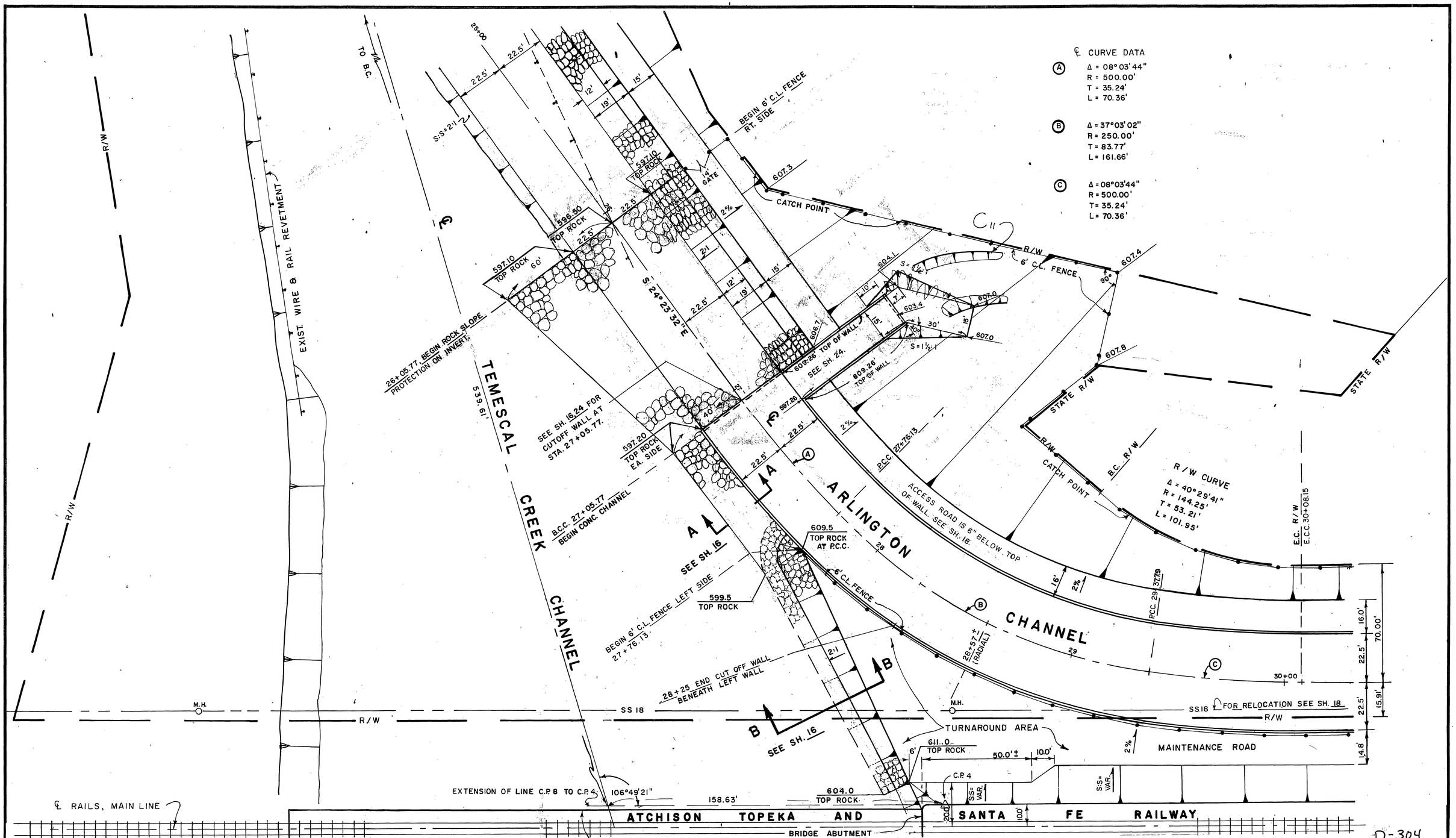

PLAN

1" = 20'

20' 0 20'

D-304

REVISIONS			
C11	Ramp Changed as Shown		11/15/72
REF.	DESCRIPTION	APPR.	DATE

RIVERSIDE COUNTY FLOOD CONTROL AND WATER CONSERVATION DISTRICT

DESIGNED BY: W.D.G.
DRAWN BY: K.R.B.
DATE DRAWN: DEC. 1973
CHECKED BY: D.M.M.

APPROVED BY: John W. Bergant
CHIEF ENGINEER R.E. NO. 8822
DATE: 3-11-85

ARLINGTON STORM CHANNEL
TEMESCAL CREEK CHANNEL JUNCTION
1970 STORM DRAIN BOND ISSUE PROJECT NO. 25

PROJECT NO. 1-0-020
DRAWING NO. 1-294
SHEET NO. 17 OF 57

AS BUILT

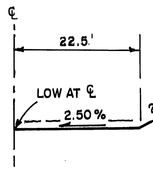

RIGHT SIDE
BEGINNING OF GRADING TO
STA. 23+60±

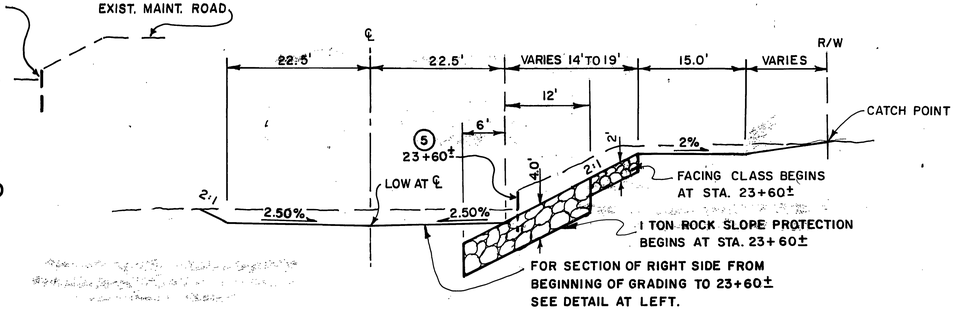

BEGINNING OF GRADING TO STA. 26+05.77

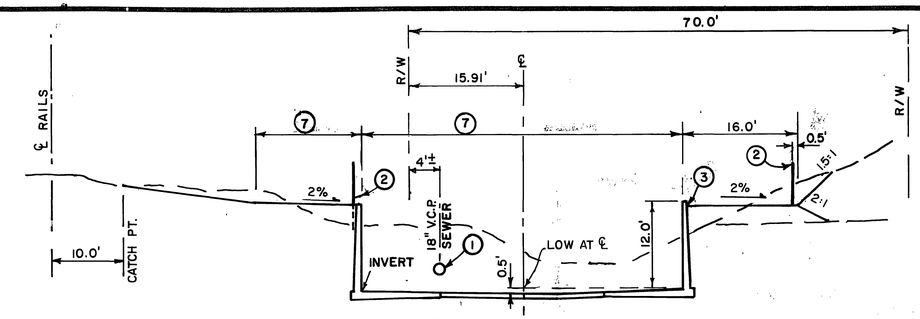

STA. 30+08.15 TO STA. 30+22.06
STA. 33+15.02 TO STA. 35+75.00

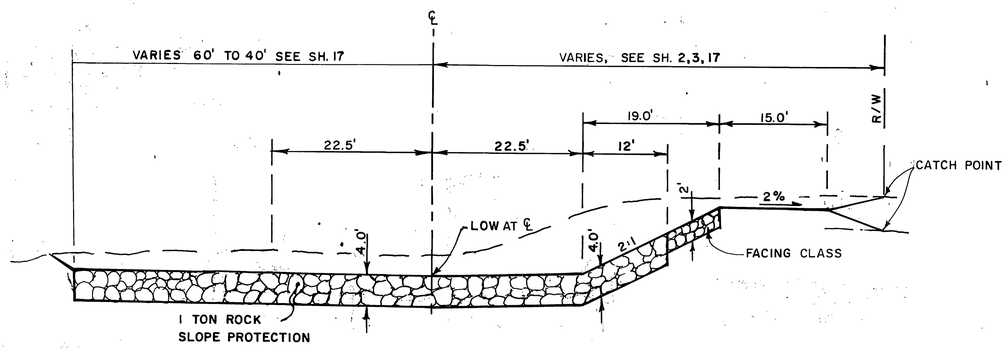

STA. 26+05.77 TO STA. 27+05.77

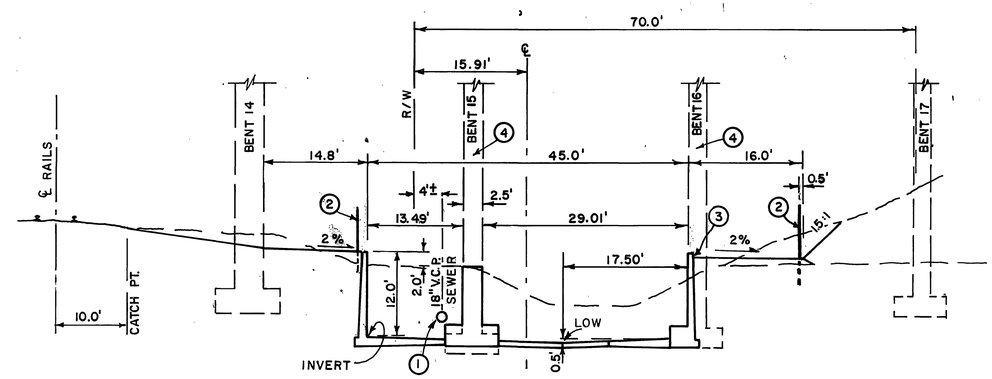

STA. 30+22.06 TO STA. 33+15.02

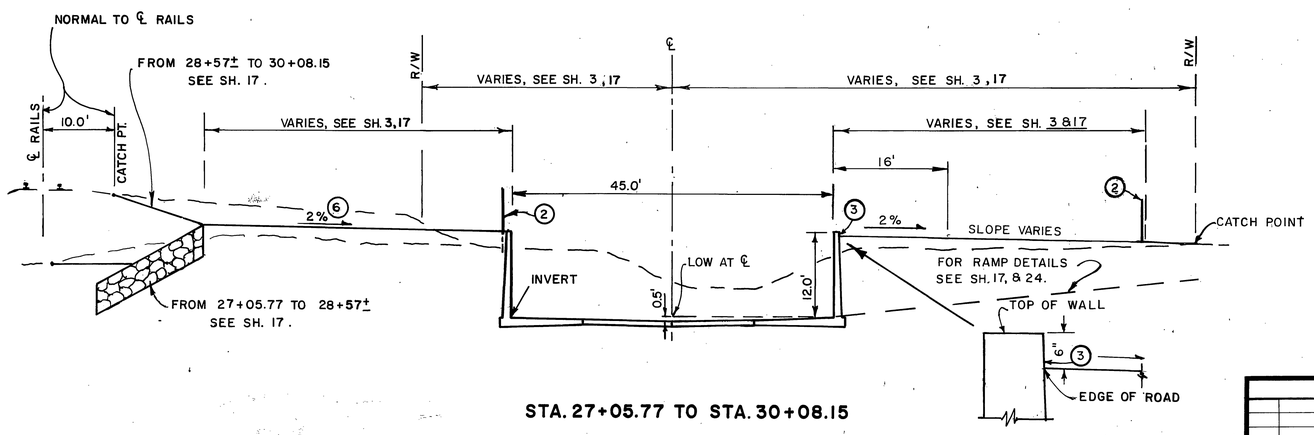

STA. 27+05.77 TO STA. 30+08.15

NOTES

1. 18" SS TO BE RELOCATED TO SOUTH SIDE OF RAILWAY R/W SEE SH. 44
2. 6' C.L. FENCE. (BEGINS AT STA. 27+76.13 LT. SIDE AND AT STA. 26+05.77 RT. SIDE.)
3. EDGE OF ROAD 6" BELOW TOP OF WALL.
4. FOR DETAILS AT FREEWAY BENTS & FOOTING, SEE SH. 25 & 26.
5. REMOVE RAIL & WIRE REVETMENT UPSTREAM OF 23+60 ±
6. CROSS-SLOPE VARIES FROM 0% AT 27+76.13 TO 2% AT 28+57 ±.
7. VARIES FROM 45.0' AT STA. 34+75 TO 35' AT STA. 35+75, & LEFT MAINT. RD. VARIES 14.8' TO 15.0'

REVISIONS			
REF.	DESCRIPTION	APPR.	DATE
	No Change		

RIVERSIDE COUNTY FLOOD CONTROL AND WATER CONSERVATION DISTRICT

DESIGNED BY: W. D. G.
DRAWN BY: K. R. B.
DATE DRAWN: JAN. 1974
CHECKED BY: D. M. M.
APPROVED BY: Alan W. Bryant
CHIEF ENGINEER R/E. NO. 8822
DATE: 3-11-75

ARLINGTON STORM CHANNEL
CROSS SECTIONS
1970 STORM DRAIN BOND ISSUE PROJECT NO. 25

D-304
PROJECT NO. 1-0-020
DRAWING NO. 1-294
SHEET NO. 18 OF 57

AS BUILT

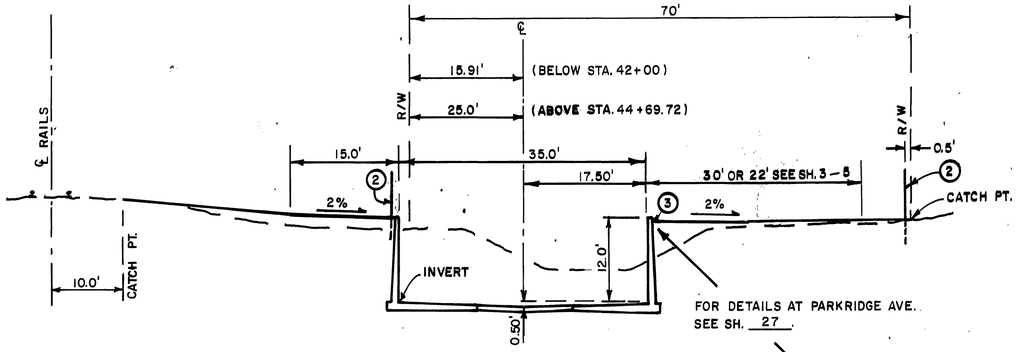

STA. 35+75.00 TO STA. 63+63.00

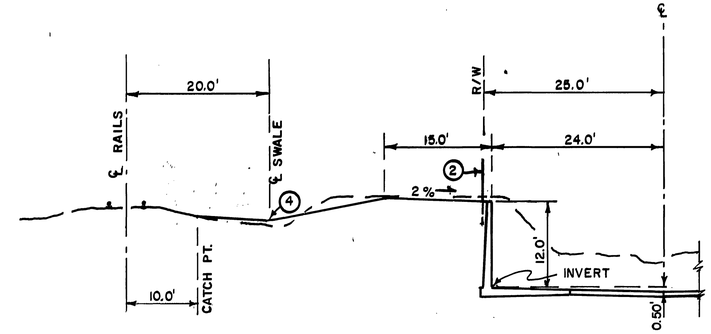

STA. 158+50 TO STA. 171+75.00

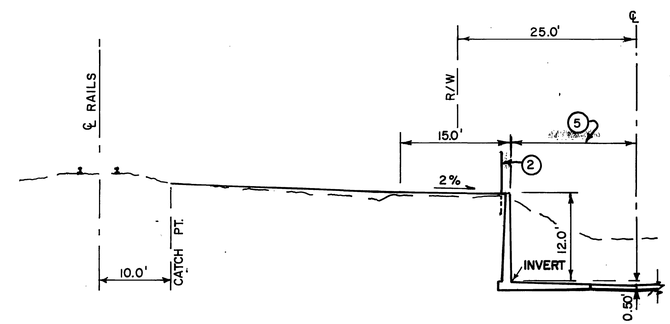

STA. 65+15.00 TO STA. 86+00.00

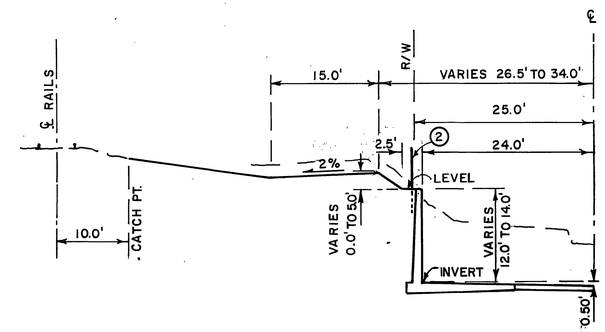

STA. 192+00.00 TO STA. 193+00.00

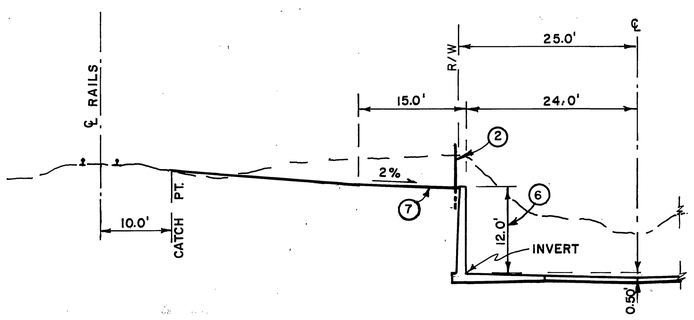

STA. 86+00.00 TO STA. 148+20.56
STA. 149+98.08 TO STA. 158+50
STA. 171+75.00 TO STA. 192+00.00

NOTES

1. FOR DETAILS AT Mc KINLEY ST. SEE SH. 28, 29
2. FOR DETAILS AT R.R. SPUR SEE SH. 54-56.
3. FOR DETAIL AT LINCOLN ST. CHANNEL JUNCTION SEE SH. 31.

NOTES:

(2) 6' CHAIN LINK FENCE

(3) EDGE OF ROAD 6" BELOW TOP OF WALL.

(4) FOR SWALE ELEV. STA. 158+50 TO 171+75 SEE SH. 12.

(5) VARIES FROM 17.5' AT STA. 84+00 TO 24.0' AT 86+00

(6) VARIES FROM STA. 122+95 TO 124+06. SEE SH. 9, 54, 55.

(7) CROSS-SLOPE VARIES FROM STA 191+67 TO STA. 192+00 SEE SH. 14.

D-304

REVISIONS			
	No Change		
REF.	DESCRIPTION	APPR.	DATE

AS BUILT

RIVERSIDE COUNTY FLOOD CONTROL AND WATER CONSERVATION DISTRICT

DESIGNED BY: W.D.G.
DRAWN BY: K.R.B.
DATE DRAWN: JAN. 1974
CHECKED BY: D. M. M.

APPROVED BY: John W. Bryant
CHIEF ENGINEER R.E. NO. 8822
DATE: 3-11-75

ARLINGTON STORM CHANNEL
CROSS SECTIONS

1970 STORM DRAIN BOND ISSUE PROJECT NO. 25

PROJECT NO. 1-0-020
DRAWING NO. 1-294
SHEET NO. 19 OF 57

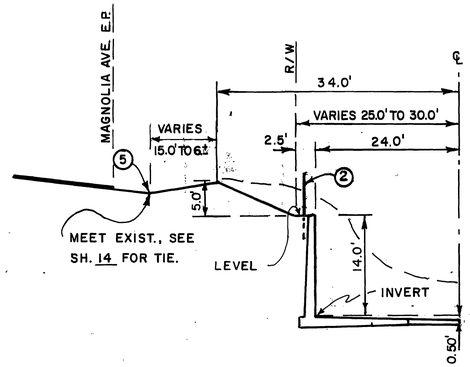

STA. 193+00.00 TO STA. 194+26±

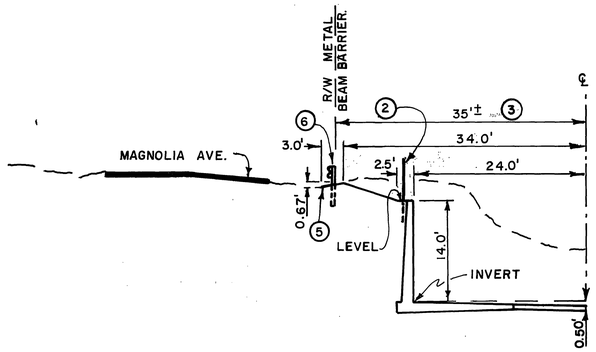

STA. 194+26± TO STA. 198+70.00

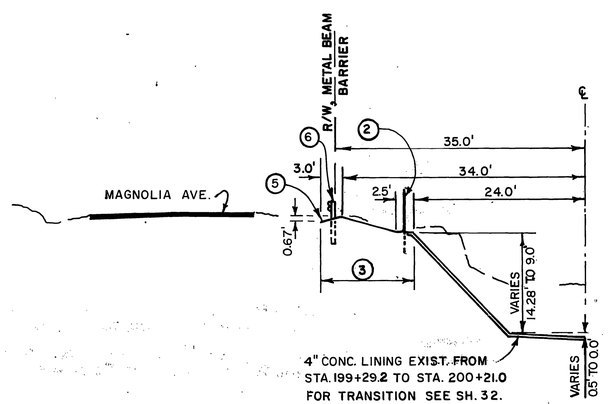

STA. 198+70.00 TO STA. 200+21.0

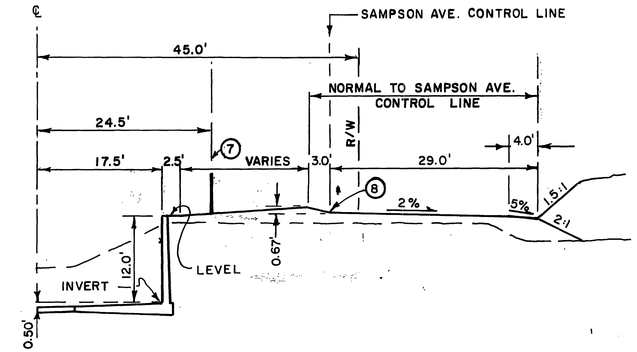

STA. 65+15 TO STA. 66+28.69

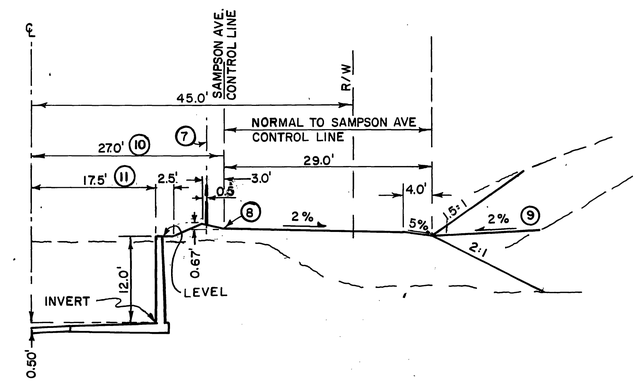

STA. 66+28.69 TO STA. 87+88.73

NOTES

2. 6' CHAIN LINK FENCE (SEE SH. 14 & 15 FOR PORTION BEYOND 200+21.0
3. FOR LIMITS OF METAL BEAM BARRIER & SIDE-SLOPE GRADING SEE SHEETS 14 AND 15.
5. ELEVATION IS 0.7' BELOW E.P. OF MAGNOLIA AVE.
6. BACK OF 8" X 8" POSTS FOR METAL BEAM GUARD RAIL ARE LOCATED 35.0' FROM ℄ CHANNEL. SEE SH. 14 & 51
7. 6' CHAIN LINK FENCE AND CABLE BARRIER.
8. FOR VERTICAL CONTROL WHERE SAMPSON AVE. IS TO BE RECONSTRUCTED, SEE SH. 5 THOUGH 7.
9. STA. 82+40 TO 85+80 2% FILL.
10. VARIES FROM 27' AT 83+80.51 TO 39' AT 87+88.73, SEE SH. 6 & 7.
11. VARIES FROM 17.5' AT 84+00 TO 24' AT 86+00.

D-304

REVISIONS			
	No Change		
REF.	DESCRIPTION	APPR.	DATE

RIVERSIDE COUNTY FLOOD CONTROL AND WATER CONSERVATION DISTRICT

DESIGNED BY: W.D.G.
DRAWN BY: K.R.B.
DATE DRAWN: JAN. 1974
CHECKED BY: D.M.M.

APPROVED BY: John W. Bryant
CHIEF ENGINEER R.E. NO. 8822
DATE: 3-11-75

ARLINGTON STORM CHANNEL
CROSS SECTIONS
1970 STORM DRAIN BOND ISSUE PROJECT NO. 25

PROJECT NO. 1-0-020
DRAWING NO. 1-294
SHEET NO. 20 OF 57

AS BUILT

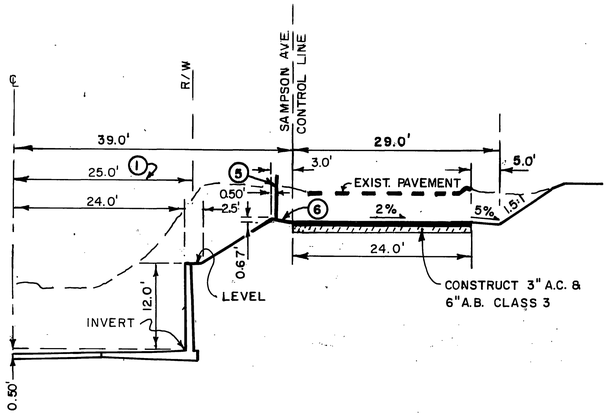

STA. 87+88.73 TO STA. 98+00.00

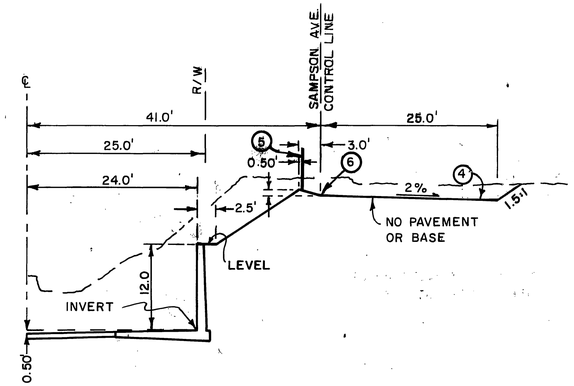

STA.177+00.00 TO STA.198+70.00

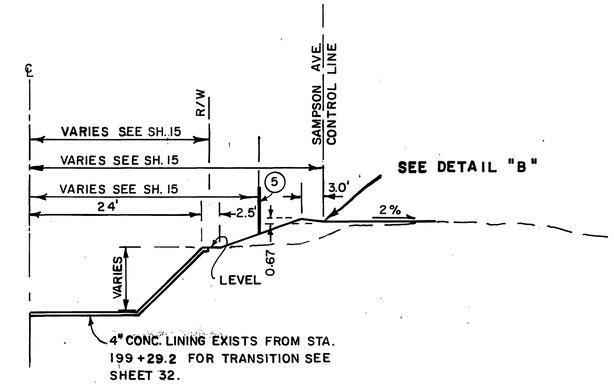

STA.199+29.2± TO STA.200+21.0

NOTE:

1 FOR DETAILS AT Mc KINLEY ST SEE SH. 28 & 29.

2 FOR DETAILS AT R.R. SPUR. SEE SH.54 & 55.

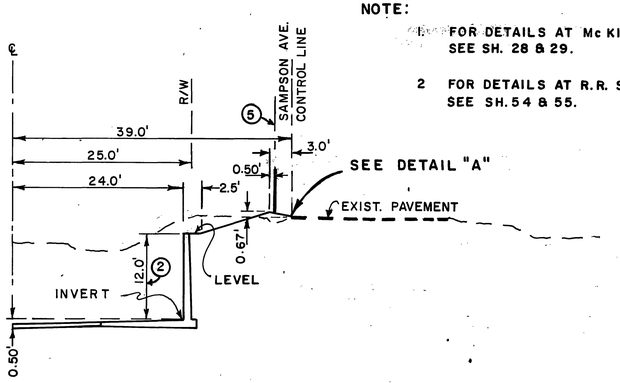

STA. 98+00.00 TO STA.148+10.94

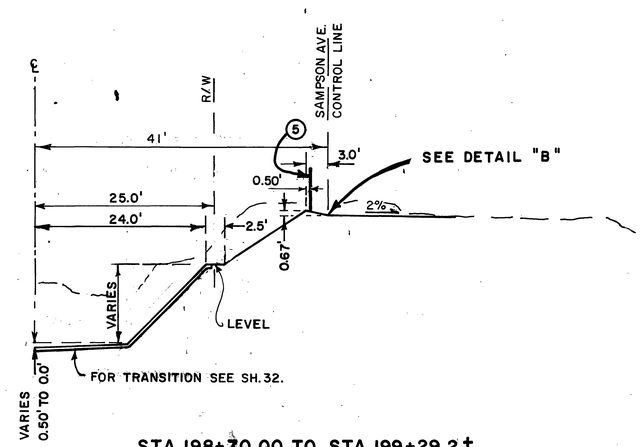

STA.198+70.00 TO STA.199+29.2±

NOTES

1. VARIES FROM 45' AT 87+88.73 TO 25' AT STA. 87+98.73, SEE SH. 7.
2. VARIES FROM STA.118+50 TO 124+06 SEE SH. 9, 54, 55.
3. LESS THAN 25.0' THROUGH CURVE, STA.193+25.15 TO 195+26.45.
4. ROAD RECONSTRUCTION STA. 177+00 TO STA. 188+00.
5. 6' CHAIN LINK FENCE & CABLE BARRIER.
6. FOR VERTICAL CONTROL WHERE SAMPSON AVE. IS TO BE RECONSTRUCTED SEE SH. 7 & 13.
7. 6' CHAIN LINK FENCE & CABLE BARRIER IS NOT SHOWN FOR CLARITY SINCE ITS LOCATION VARIES AS DETAILED ON SHEET 15.

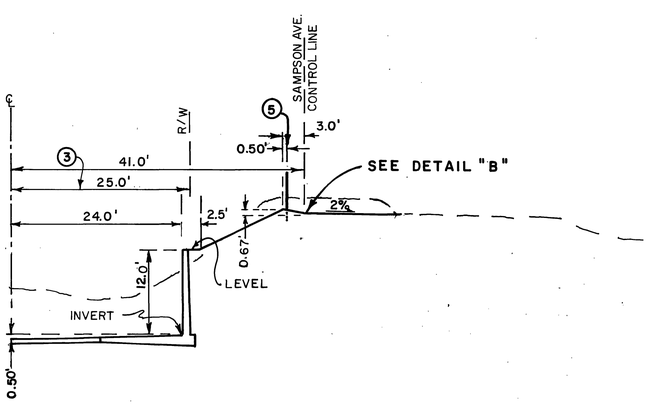

STA.149+88.46 TO STA.177+00.00

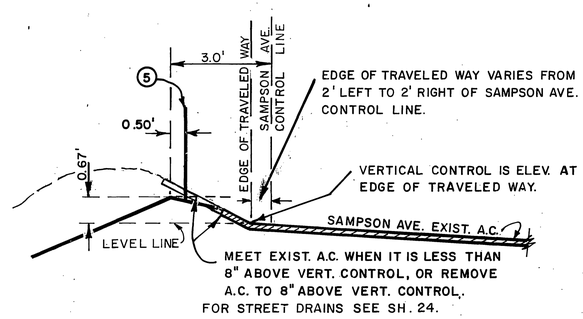

DETAIL "A"

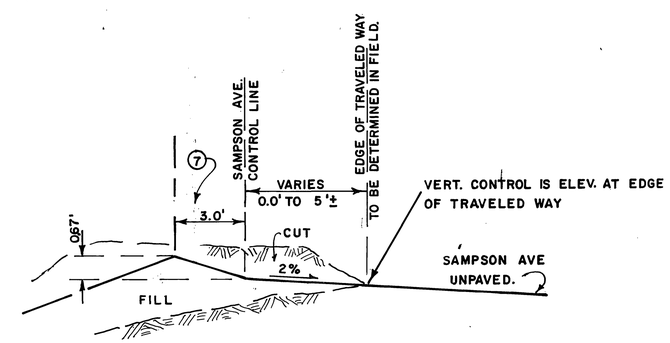

DETAIL "B"

REVISIONS			
	No Change		
REF.	DESCRIPTION	APPR.	DATE

AS BUILT

RIVERSIDE COUNTY FLOOD CONTROL AND WATER CONSERVATION DISTRICT

DESIGNED BY: W. D. G.
DRAWN BY: K. R. B.
DATE DRAWN: JAN. 1974
CHECKED BY: D. M. M.

APPROVED BY: John W. Bryant
CHIEF ENGINEER R.E. NO. 8822
DATE: 3-11-75

ARLINGTON STORM CHANNEL
CROSS SECTIONS
1970 STORM DRAIN BOND ISSUE PROJECT NO. 25

PROJECT NO. 1-0-020
DRAWING NO. 1-294
SHEET NO. 21 OF 57

CHANNEL WALL SCHEDULE

WALL	CONCRETE				REINFORCING STEEL					
	HT *	L	Tw	Ts	A BAR	a_1	a_2	B BAR	b_1	b_2
A	12'-0"	11'-6"	1'-0"	1'-4"	#6@12	5'-8"	8'-7"	#6@12	3'-5"	3'-11"
B	12-0	10-10 7/8	1-0	1-4	#6@12	5-8	8-7	#6@12	3-5	3-11
C	12-0	11-6	1-0	1-4	#6@12	6-4	9-0	#7@12	4-0	5-6
D	VARIES	12-6	1-2	1-7	#6@12	6-4	9-4	#6@12	3-10	4-6
E	VARIES	12-6	1-2	1-7	#6@12	6-10	9-11	#7@12	4-4	6-3
F	VARIES	13-6	1-3	1-8	#6@12	7-4	10-8	#7@12	4-9	6-5
G	14'-0"	13-6	1-3	1-8	#7@12	7-9	11-3	#7@12	4-1	6-5
H	VARIES	13-6	1-3	1-8	#7@12	7-9	11-3	#7@12	4-1	6-5
I	VARIES	15-7	1-4	1-10	#7@12	9-2	13-0	#8@12	5-5	7-10
J	VARIES	17-0	1-5	1-11	#8@12	10-2	14-6	#8@12	4-10	6-10

* FOR ACTUAL WALL HEIGHTS WHERE "HT." VARIES, SEE PLAN AND PROFILE SHEETS AT LOCATIONS AS LISTED IN THE LOCATION SCHEDULE.

LOCATION SCHEDULE

LEFT CHANNEL WALL

	STATION TO STATION		WALL	QUANTITY △ WALL CONC. CY/LF	FOOTING CONC. CY/LF	REBAR LB/LF
	27+05.77	28+25.00	△△	0.407	0.581	168.9
	28+25.00	30+22.06	A	0.407	0.482	91.8
	32+88.47	63+63.00				
C_1	65+15.00	122+95.~~00~~ 40				
C_1	124+06.~~00~~ 40	148+20.56				
C_{12}	149+98.08	156+41.~~27~~ 61				
C_{12}	156+85.~~87~~ 81	192+00.00				
	30+22.06	32+88.47	B		0.460	88.9
	63+63.00	63+88.00	D	0.466	0.590	99.3
	64+90.00	65+15.00		0.463		99.3
	192+00.00	192+50.00	E	0.463		109.8
	63+88.00	64+13.00	F	0.532	0.659	117.4
	64+65.00	64+90.00		0.522		117.3
	148+20.56	148+45.56		0.510		116.9
	149+73.08	149+98.08		0.505		116.9
	193+00.00	198+70.00	G	0.540		129.8
	192+50.00	193+00.00	H	0.521		123.6
	148+45.56	148+70.56	I	0.628	0.806	158.3
	149+48.08	149+73.08		0.618		157.9
	122+95.40	123+20.40	J	0.610	0.905	174.0
	123+81.40	124+06.40		0.588		173.2

△ WHERE THE WALL HEIGHTS VARY. THE QUANTITIES LISTED ARE THE AVERAGE QUANTITIES BETWEEN THE GIVEN STATION LIMITS.

△△ FOR WALL DESIGN SEE DETAIL "A" INCLUDED IN THE FOOTING CONC. AND REBAR QUANTITIES LIST IS THE CUTOFF WALL.

RIGHT CHANNEL WALL

	STATION TO STATION		WALL	QUANTITY △ WALL CONC. CY/LF	FOOTING CONC. CY/LF	REBAR LB/LF
	27+21.77	63+63.00	A	0.407	0.482	91.8
	65+15.00	87+85.00				
	99+35.00	112+50.00				
	125+00.00	148+10.94				
C_{12}	149+88.46	156+41.~~27~~ 61				
	159+30.00	172+75.00				
	87+85.00	99+35.00	C	0.407	0.482	101.3
	112+50.00	118+50.00				
C_{12}	156+41.~~27~~ 61	159+30.00				
	172+75.00	198+70.00				
	63+63.00	63+88.00	D	0.461	0.590	99.2
	64+90.00	65+15.00		0.457		99.1
	118+50.00	119+00.00	E	0.463		109.8
C_1	124+06.~~00~~ 40	125+00.00	A	0.407	0.482	91.8
	63+88.00	64+13.00	F	0.515	0.659	117.0
	64+65.00	64+90.00		0.505		116.8
	148+10.94	148+35.94		0.507		116.8
	149+63.46	149+88.46		0.503		116.7
C_1	119+50.00	122+16.~~26~~ 66	G	0.540		129.8
	119+00.00	119+50.00	H	0.521		123.6
C_1	123+27.~~26~~ 66	124+06.~~00~~ 40	D	0.463	0.590	199.2
	148+35.94	148+60.94	I	0.619	0.806	158.1
	149+38.46	149+63.46		0.611		157.6
	122+16.66	122+41.66	J	0.680	0.905	176.2
	123+02.66	123+27.66		0.637		174.7

NOTES

1. TRANSVERSE CONSTRUCTION JOINTS IN WALLS AND WALL FOOTINGS ARE REQUIRED AT A MAX. SPACING OF 50 FT. AND MIN. SPACING OF 10 FT., EXCEPT AS SHOWN ON THE PLANS AT STRUCTURE LOCATIONS. TRANSVERSE CONSTRUCTION JOINTS ARE ALSO REQUIRED AT ALL GRADE BREAKS, B.C.'s, P.C.C., P.R.C.'s, AND E.C.'s. THESE JOINTS MUST BE IN THE SAME PLANE ACROSS THE FULL CHANNEL WIDTH, EXCEPT AS SHOWN ON THE PLANS AT STRUCTURES. THE JOINT DETAIL IS SHOWN BELOW. ALSO SEE TABLE BELOW FOR REQUIRED CHORD LENGTHS FOR WALLS THROUGH CURVES.
2. KEYED CONSTRUCTION JOINTS ARE REQUIRED IN THE UNREINFORCED INVERT TO MATCH THOSE TRANSVERSE JOINTS OF NOTE 1. WEAKENED PLANE JOINTS ARE REQUIRED IN THE UNREINFORCED INVERT AT MAX. SPACING OF 12.5'.
3. SEE SHEET 11 AND 12 FOR VERTICAL CURVES.
4. ADDITIONAL LAPS & SPLICES PER A.C.I. 318-71 AND SUPPLEMENTS.
5. STEEL QUANTITIES SHOWN HAVE NOT BEEN ADJUSTED FOR ADDITIONAL TRANSVERSE BARS AND DOWELS DUE TO JOINTS.
6. REINF. Fy = 60,000 psi. CONCRETE Fc' = 3000 psi.

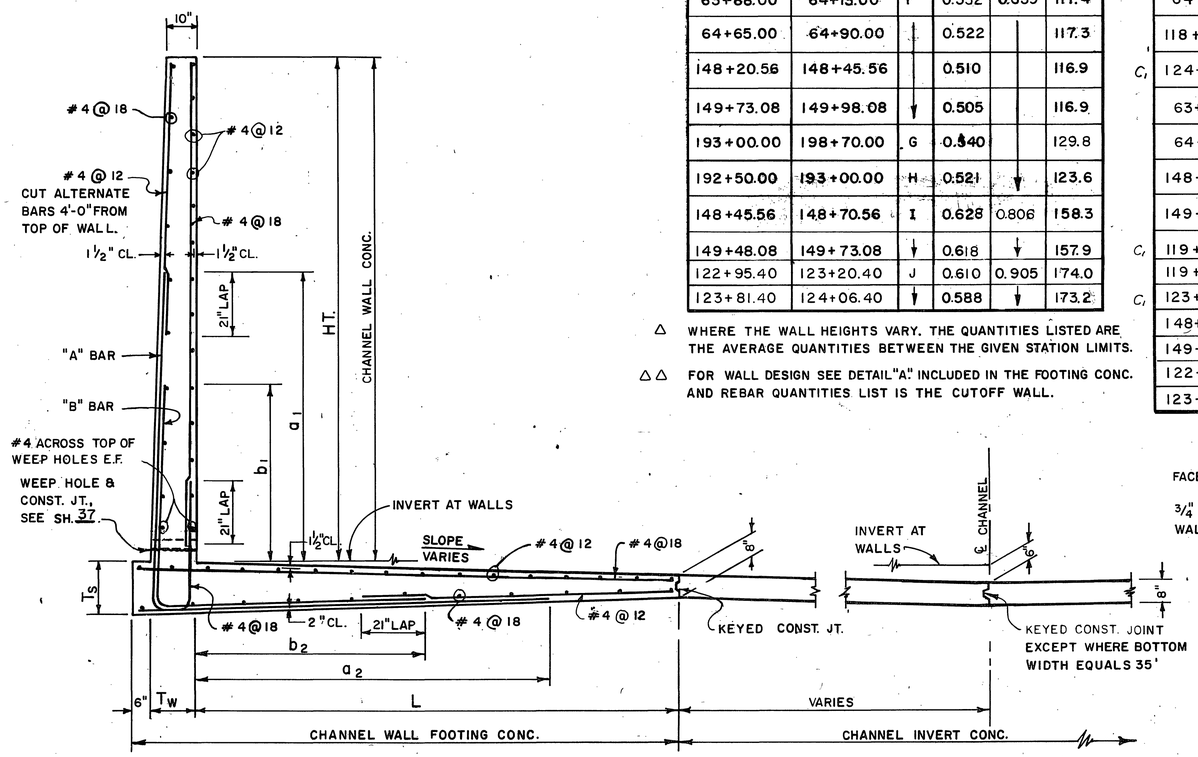

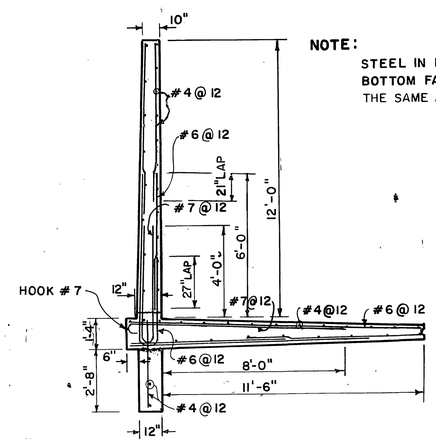

NOTE:
STEEL IN BACK OF WALL AND BOTTOM FACE OF FOOTING IS THE SAME AS WALL "C".

STA. 27+05.77 TO STA. 28+25.00

DETAIL "A"

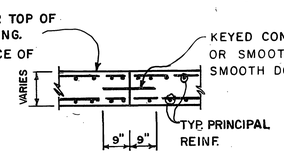

TRANSVERSE CONST. JT. DETAIL IN WALL AND WALL FOOTING

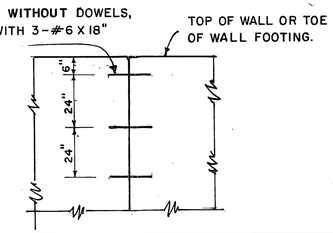

CHANNEL ℄ CURVE RADIUS	CHORD LENGTHS AT FACE OF WALLS: CHORD LENGTH ON INSIDE OF CURVE	CHORD LENGTH ON OUTSIDE OF CURVE
250.00	CHORD CONST. NOT PERMITTED	
500.00	CHORD CONST. NOT PERMITTED	
1000.00	24.40	25.60
2000.00	24.78	25.22
2789.98	24.84	25.16
5654.65	49.79	50.21

REQUIRED WALL CHORD LENGTHS (USE FOR STARTER WALL LAYOUT)

D-304

REVISIONS			
C12	Sta. Change		11/17/71
C1	Sta. Change		Nov. 5/6/76
REF.	DESCRIPTION	APPR	DATE

AS BUILT

RIVERSIDE COUNTY FLOOD CONTROL AND WATER CONSERVATION DISTRICT

DESIGNED BY: W.D.G.
DRAWN BY: K.R.B.
DATE DRAWN: MAY, 1974
CHECKED BY: D.M.M.
APPROVED BY: John H. Bryant, CHIEF ENGINEER R.E. NO. 8822
DATE: 3-11-75

ARLINGTON STORM CHANNEL
WALL SCHEDULE
CAST IN PLACE WALLS

1970 STORM DRAIN BOND ISSUE PROJECT NO. 25

PROJECT NO. 1-0-020
DRAWING NO. 1-294
SHEET NO. 23 OF 57

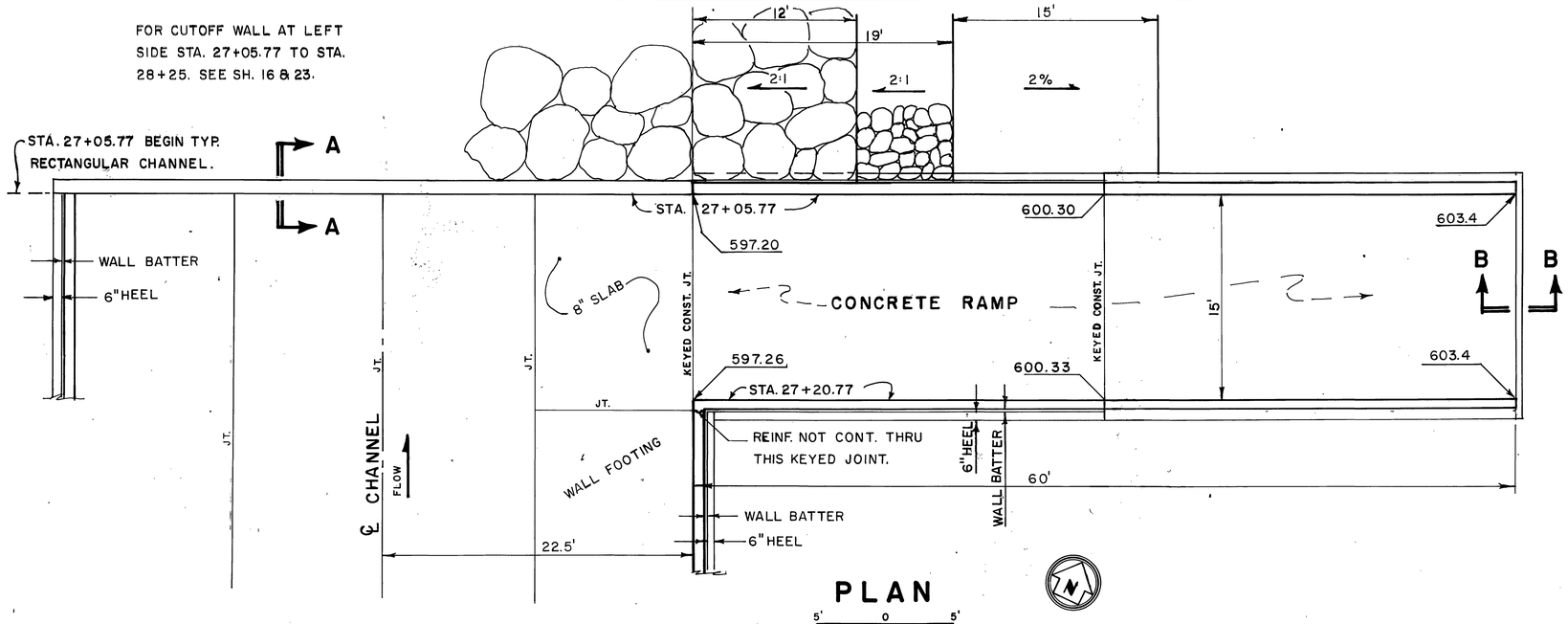

PLAN

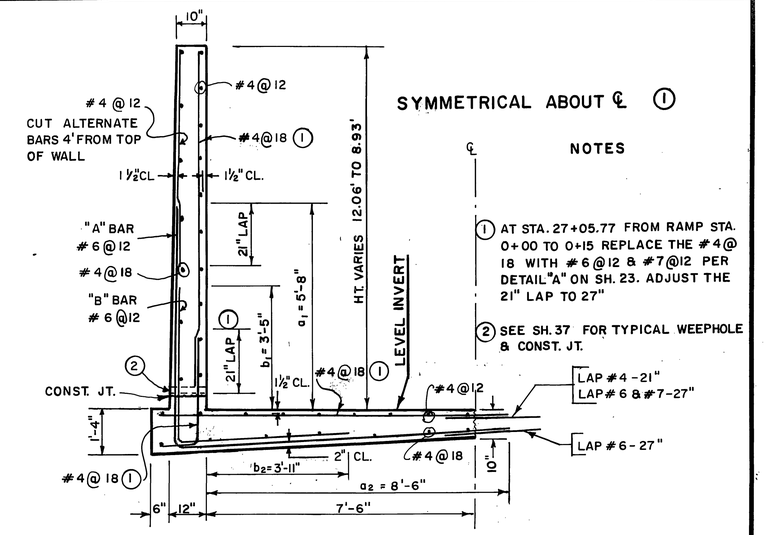

DETAILS FOR RAMP
STA. 27+05.77 AND STA. 27+20.77
RAMP STA. 0+00 TO STA. 0+30

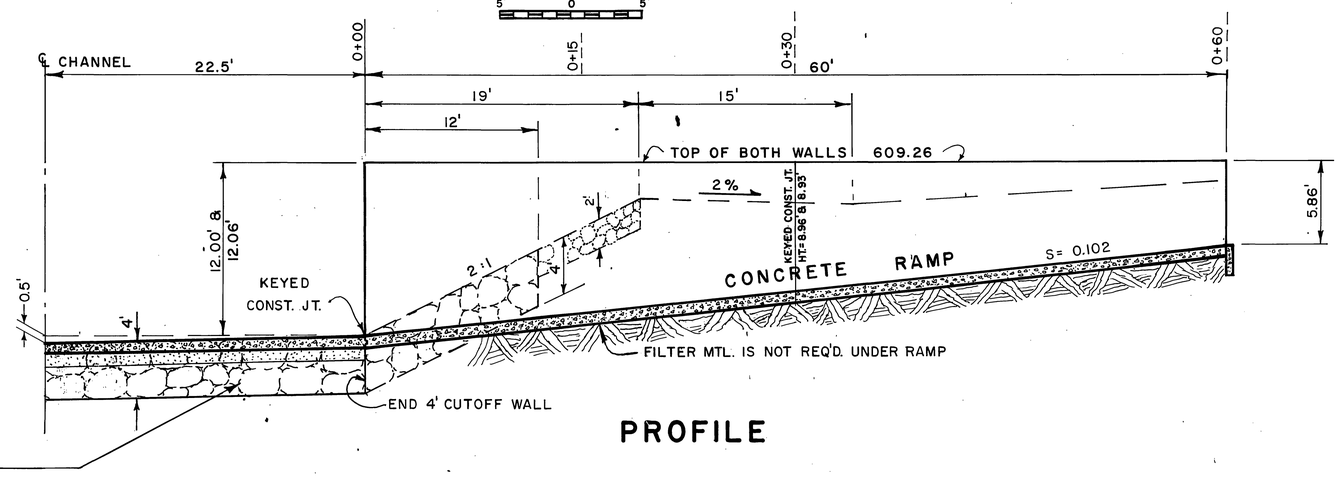

PROFILE

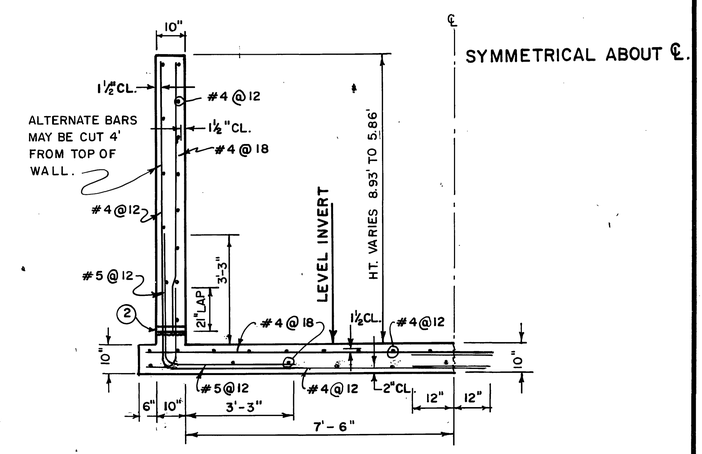

DETAILS FOR RAMP
STA. 27+05.77 AND STA. 27+20.77
RAMP STA. 0+30 TO STA. 0+60

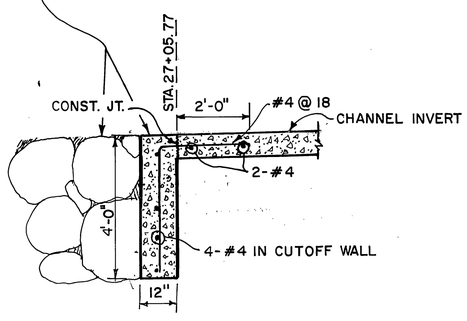

SECTION A-A

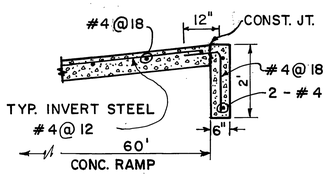

SECTION B-B

2' 0 2'

REVISIONS			
	No Change		
REF.	DESCRIPTION	APPR.	DATE

AS BUILT

RIVERSIDE COUNTY FLOOD CONTROL AND WATER CONSERVATION DISTRICT

DESIGNED BY: N.L.S.
DRAWN BY: K.R.B.
DATE DRAWN: JAN. 1975
CHECKED BY: D.M.M.

APPROVED BY: John W. Bryant
CHIEF ENGINEER R.E. NO. 8822
DATE: 3-11-75

ARLINGTON STORM CHANNEL

CUTOFF AND RAMP DETAILS AT STA. 27+05.77

1970 STORM DRAIN BOND ISSUE PROJECT NO. 34

D-304

PROJECT NO. 1-0-020
DRAWING NO. 1-294
SHEET NO. 24 OF 57

STEPS OF CONSTRUCTION

1. SAND BLAST PILE CAPS.
2. OVERPOUR PILE CAPS. (LEVELING COURSE)
3. POUR WALL FOOTING, STARTER WALLS & FILLER SILLS INTEGRALLY.
4. POUR CHANNEL WALLS & INVERT.

NOTES

1. FOR SECTION DETAILS SEE SHEET 26.
2. 18" SANITARY SEWER TO BE RELOCATED SOUTH OF RAILROAD R/W. SEE SHEET 44. REMOVE INTERFERING PORTIONS OF 18" V.C.P. AND SEWER MANHOLES. SALVAGE AND RE-USE FRAMES AND COVERS.

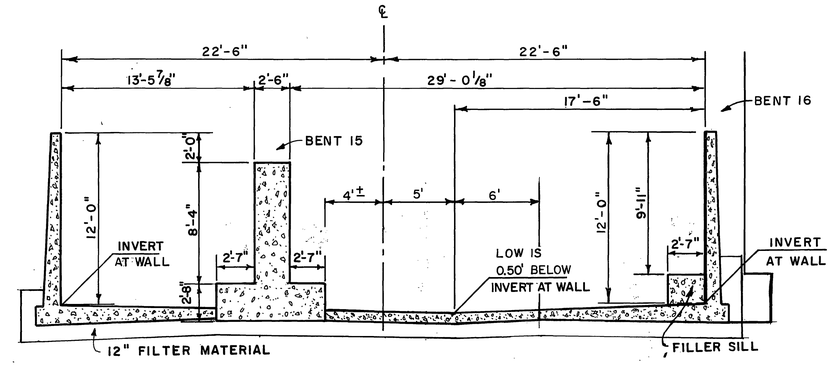

TYPICAL CHANNEL SECTION STA. 30+23.89 TO 32+60.97

5' 0 5'

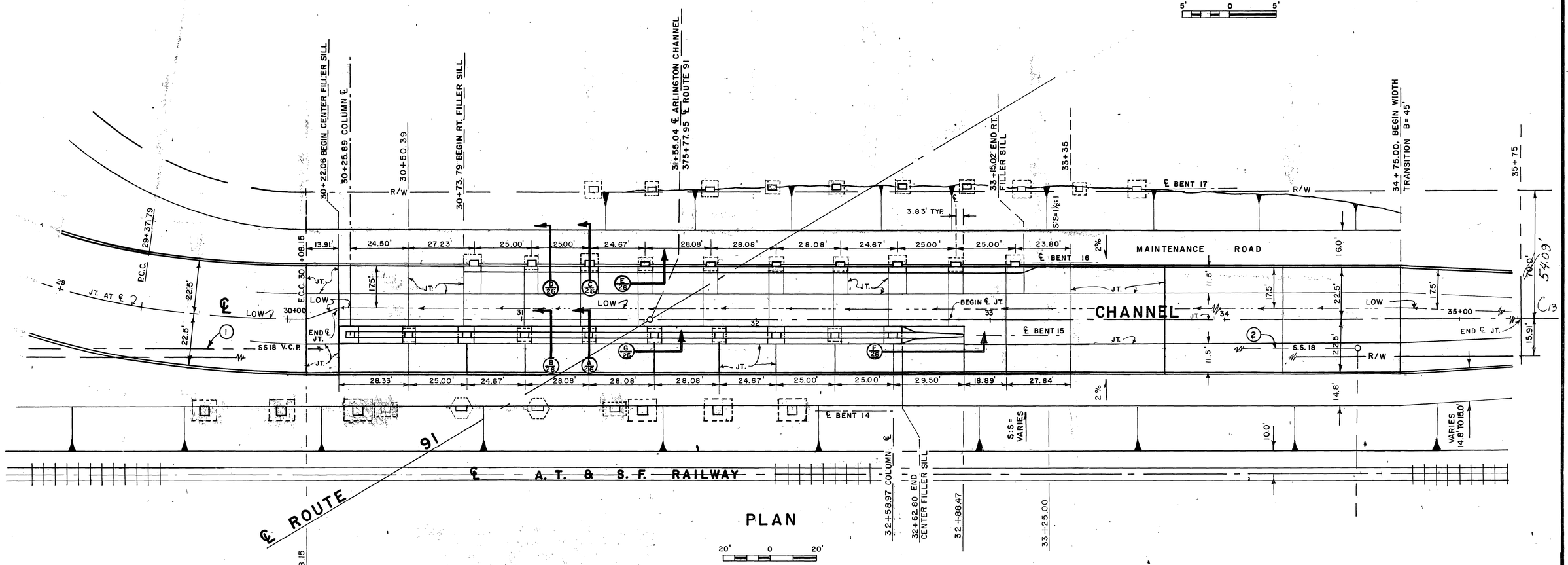

PLAN

20' 0 20'

D-304

REVISIONS			
C13	Distance Change	A.M.	11/5/74
REF.	DESCRIPTION	APPR.	DATE

RIVERSIDE COUNTY FLOOD CONTROL AND WATER CONSERVATION DISTRICT

DESIGNED BY: W.D.G.
DRAWN BY: K.R.B.
DATE DRAWN: NOV. 1973
CHECKED BY: D.M.M.

APPROVED BY: John W. Bryant
CHIEF ENGINEER R.E. NO. 8822
DATE: 2-11-75

ARLINGTON STORM CHANNEL
PLAN THROUGH FREEWAY OVERPASS
1970 STORM DRAIN BOND ISSUE PROJECT NO. 25

PROJECT NO. 1-0-020
DRAWING NO. 1-294
SHEET NO. 25 OF 57

AS BUILT

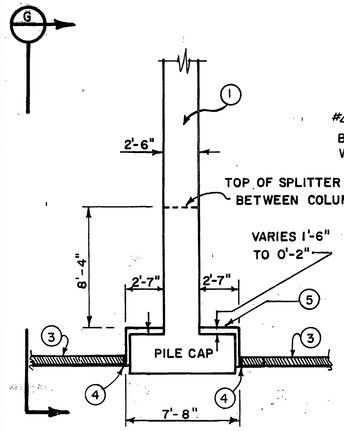

SECTION A

(BENT 15)

TYPICAL SECTION AT COLUMNS SHOWING LEVELING COURSE AT PILE CAPS.

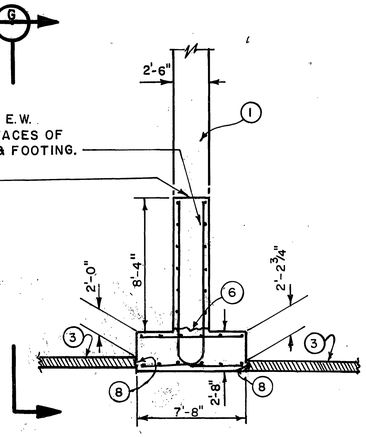

SECTION B

(BENT 15)

TYPICAL WALL AND FOOTING TO BE CONSTRUCTED BETWEEN COLUMNS

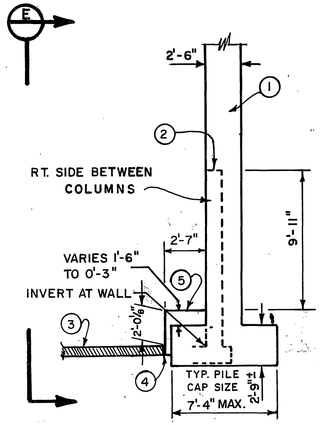

SECTION C

(BENT 16)

TYPICAL WALL TO COLUMN JOINTS AT RIGHT SIDE OF CHANNEL

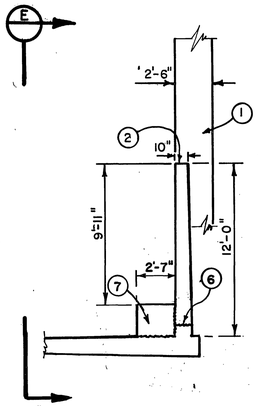

SECTION D

(BENT 16)

TYPICAL WALL AND FOOTING BETWEEN COLUMNS

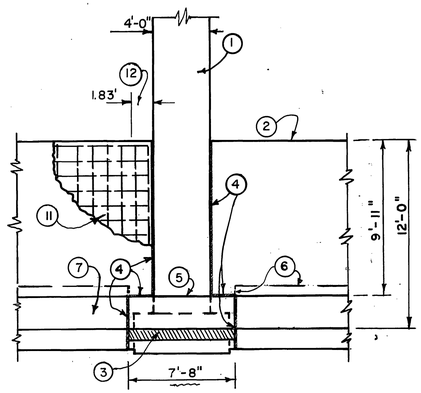

SECTION E

(BENT 16)

TYPICAL WALL TO COLUMN JOINTS

NOTES

1. EXISTING COLUMN AND PILE CAP.
2. TOP OF WALL.
3. 8" CHANNEL INVERT.
4. ½" EXPANSION JOINT MATERIAL.
5. LEVELING COURSE AT PILE CAP.
6. CONSTRUCTION JOINT.
7. FILLER SILL. (SEE DETAIL "H" FOR REINF. STEEL.)
8. KEYED CONSTRUCTION JOINT.
9. FILLER SILL MAY BE POURED INTEGRAL WITH WALL FOOTING.
10. WEEP HOLE - SEE SH. 37.
11. SEE SH. 23 FOR TYPICAL WALL.
12. SUBSTITUTE #4 BARS FOR "A" AND "B" BARS OF TYPICAL WALL.

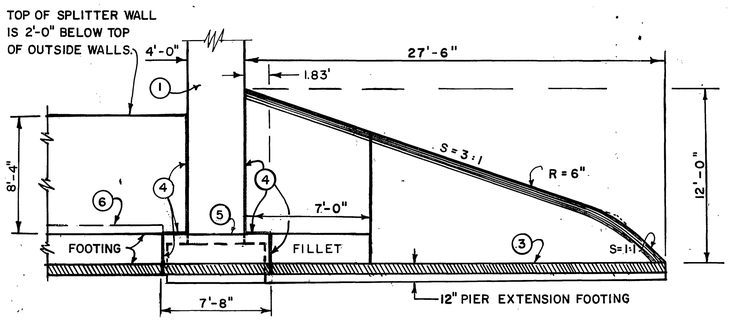

SECTION F

(BENT 15)

FOR DETAILS SEE SH. 30.

PIER EXTENSION

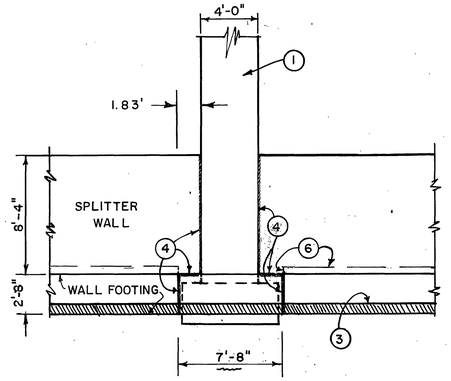

SECTION G

(BENT 15)

TYPICAL WALL TO COLUMN JOINTS

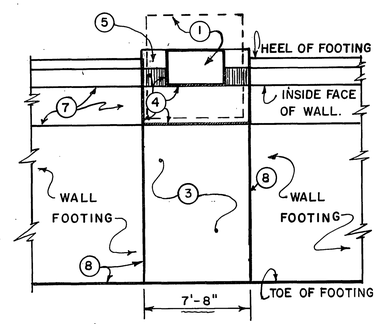

PLAN VIEW E

(BENT 16)

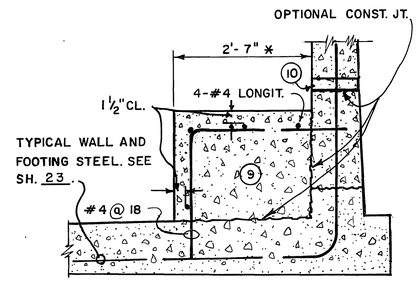

DETAIL "H"

REINF. STEEL AT FILLER SILL AT RIGHT WALL

* VARIES AT FILLET, STA. 33 + 15.02 SEE SH. 25.

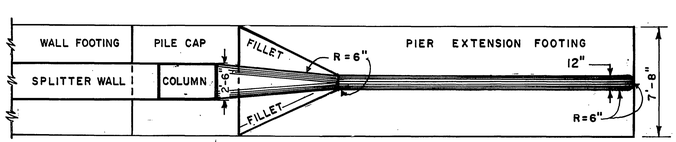

PLAN VIEW F

(BENT 15)

PIER EXTENSION

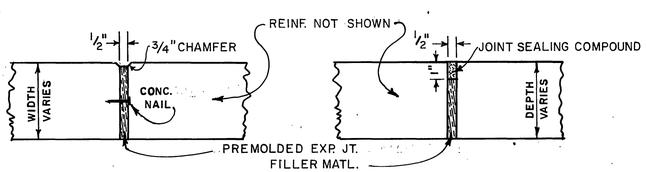

VERT. EXP. JT HORZ. EXP. JT.

EXPANSION JOINT DETAILS ADJACENT TO COLUMNS & PILE CAPS ONLY

TYPICAL SCALE

5' 0 5'

REVISIONS			
	No Change		
REF.	DESCRIPTION	APPR.	DATE

AS BUILT

RIVERSIDE COUNTY FLOOD CONTROL AND WATER CONSERVATION DISTRICT

DESIGNED BY: N. L. S.
DRAWN BY: K. R. B.
DATE DRAWN: APR. 1974
CHECKED BY: D. M. M.

APPROVED BY: Robert W. Bryant
CHIEF ENGINEER R.E. NO. 8822
DATE: 3-11-75

ARLINGTON STORM CHANNEL

DETAILS AT FREEWAY OVERPASS

1970 STORM DRAIN BOND ISSUE PROJECT NO. 25

D-304

PROJECT NO. 1-0-020
DRAWING NO. 1-294
SHEET NO. 26 OF 57

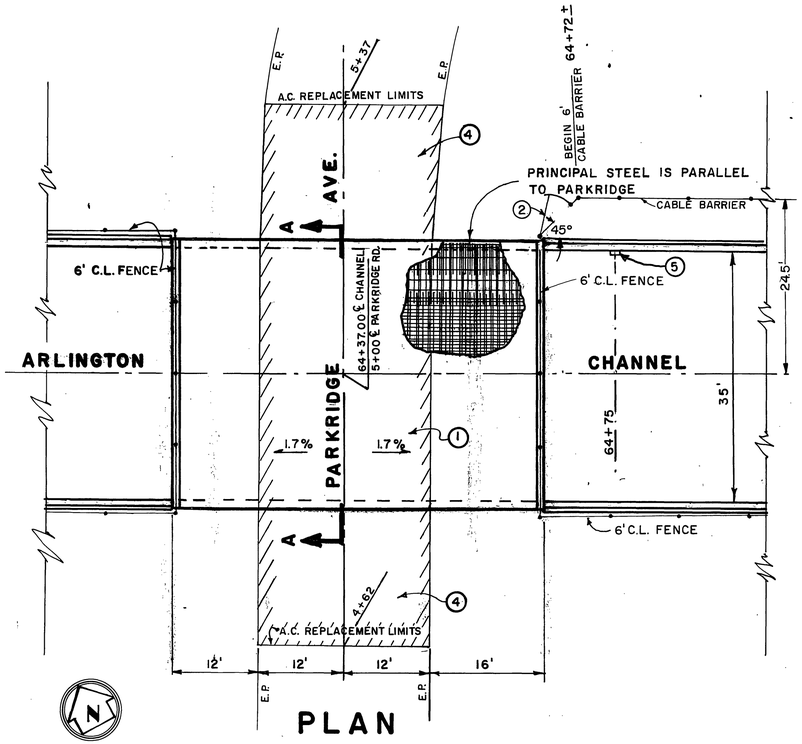

PLAN

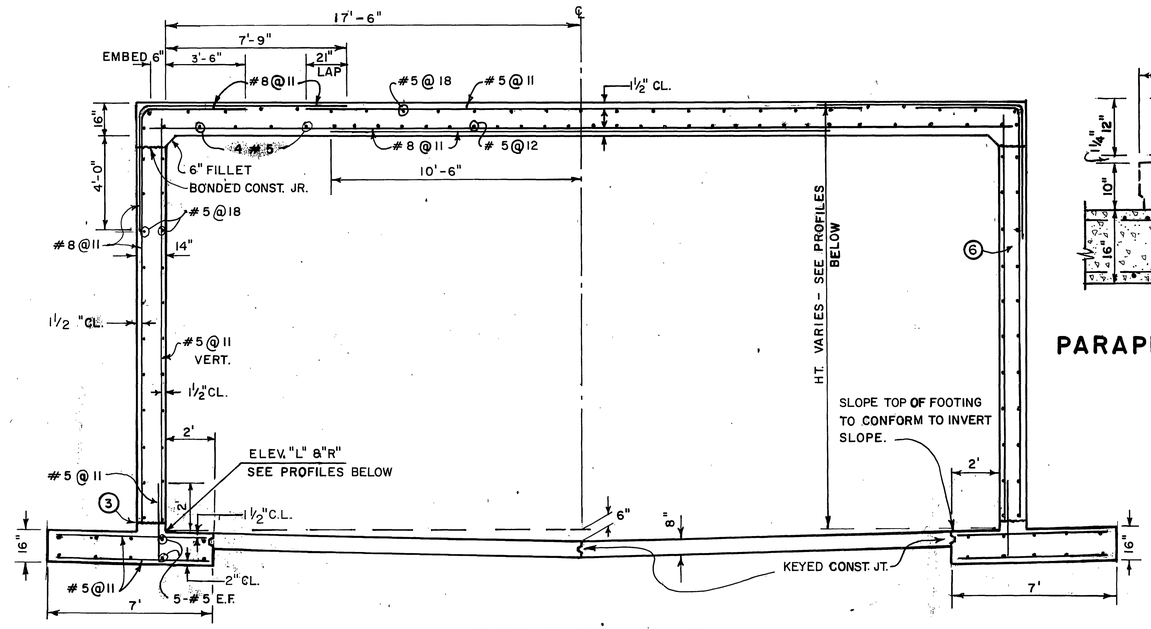

SECTION A-A

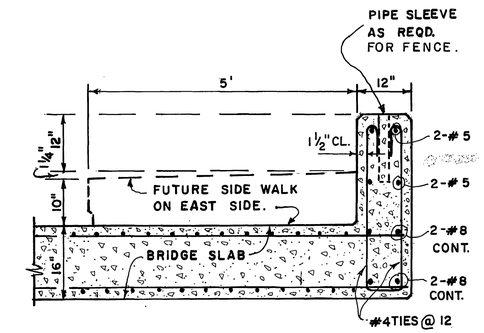

PARAPET DETAIL FOR BOTH SIDES.

NOTES

1. ONE INCH OVERLAY OF A.C. - 24' WIDE.
2. 6' WIDE GATE.
3. FOR WEEP HOLE AND BONDED CONST. JOINT SEE SHEET 37.
4. 3" A.C. ON 6" A.B. CLASS 3.
5. INSTALL ¾" ROUND GALV. STEEL STEPS. TOP STEP SHALL BE 1' FROM TOP OF WALL, OTHERS AT 16" O.C., BOTTOM STEP AT 1.55' ABOVE INVERT. MIN. WALL EMB. = 4 INCHES. SEE STD. DWG. SHEET. 40.
6. CONST. JT. PER DETAIL SHEET. 23

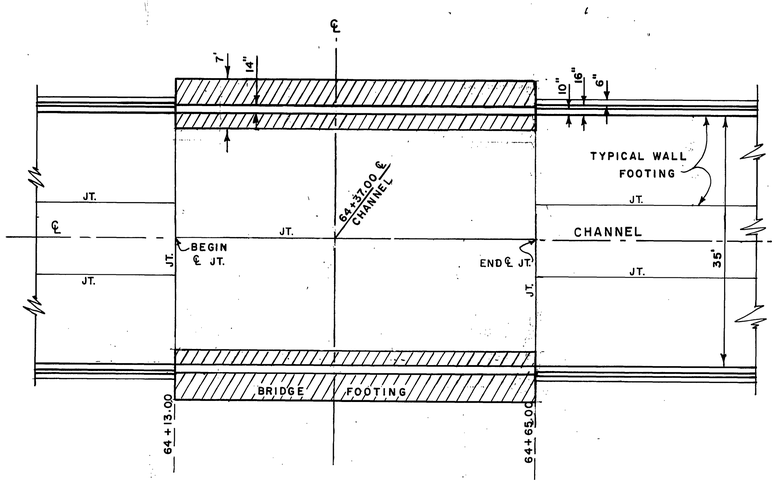

PLAN OF FOUNDATION

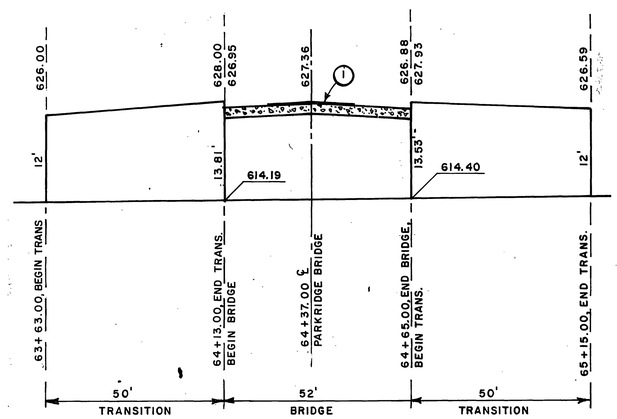

PROFILE RIGHT WALL

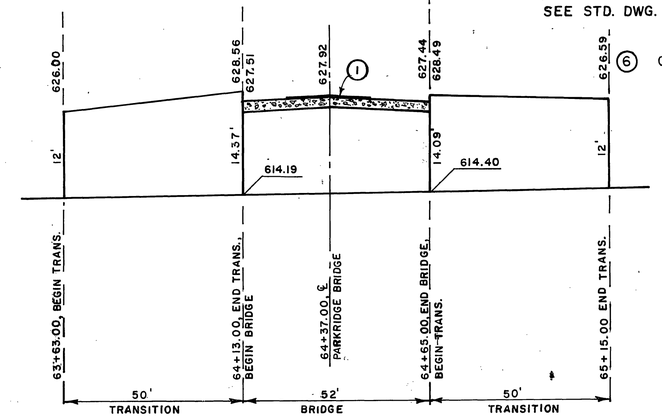

PROFILE LEFT WALL

PLAN
TYPICAL SCALE
10' 0 10'

PROFILES
10' 0 10' VERT.
20' 0 20' HORIZ.

Fy = 60,000 p.s.i.; Fc' = 4000 p.s.i.
DESIGN DATA HS 20 AND ALT. LOAD

D-304

REVISIONS			
REF.	DESCRIPTION	APPR.	DATE
	No Change		

AS BUILT

RIVERSIDE COUNTY FLOOD CONTROL AND WATER CONSERVATION DISTRICT

DESIGNED BY: N.L.S.
DRAWN BY: K.R.B.
DATE DRAWN: JULY 1974
CHECKED BY: D.M.M.
APPROVED BY: John W. Bryant
CHIEF ENGINEER R.E. NO. 8822
DATE: 3-11-75

ARLINGTON STORM CHANNEL
PARKRIDGE AVE. BRIDGE DETAILS
1970 STORM DRAIN BOND ISSUE PROJECT NO. 25

PROJECT NO. 1-0-020
DRAWING NO. 1-294
SHEET NO. 27 OF 57

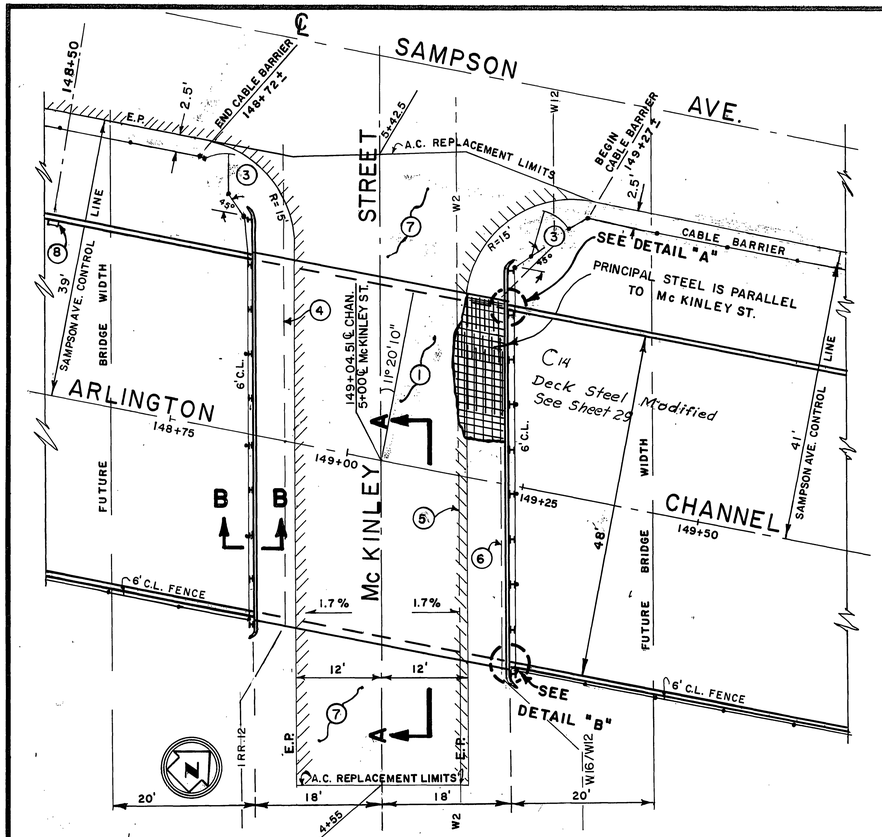

PLAN

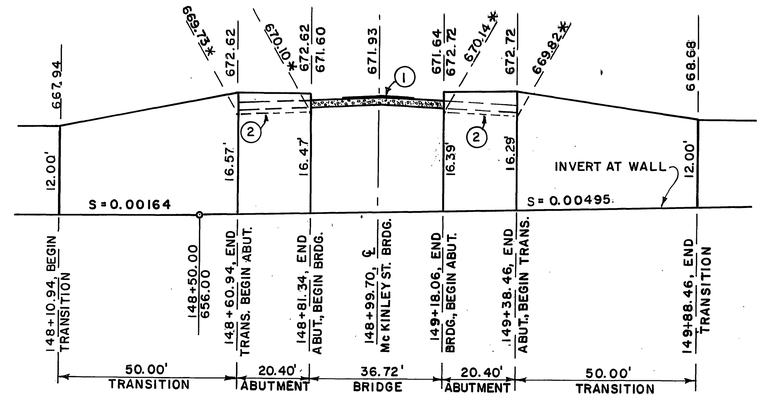

PROFILE RIGHT WALL

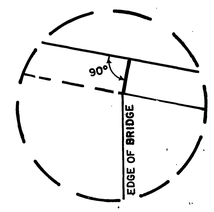

DETAIL "A"

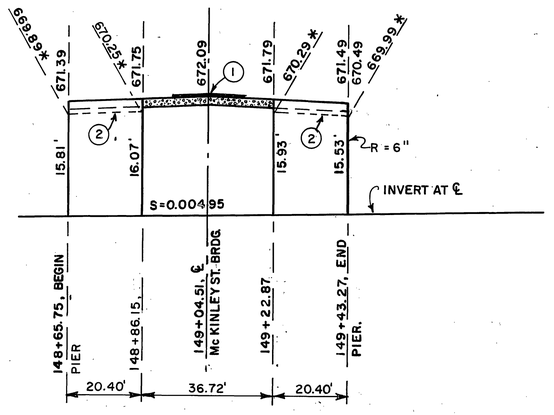

PROFILE CENTER PIER

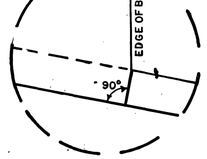

DETAIL "B"

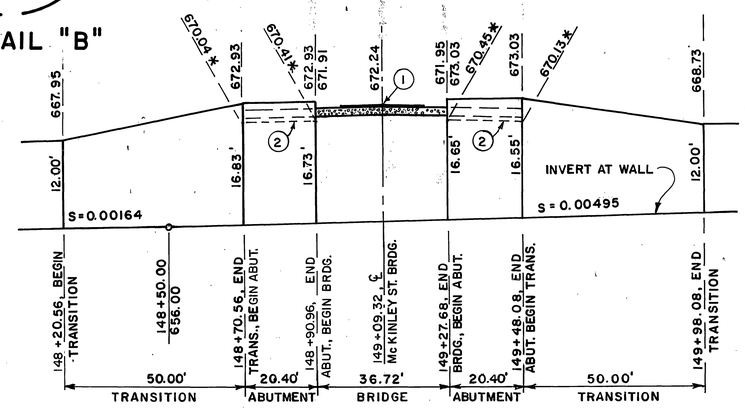

PROFILE LEFT WALL

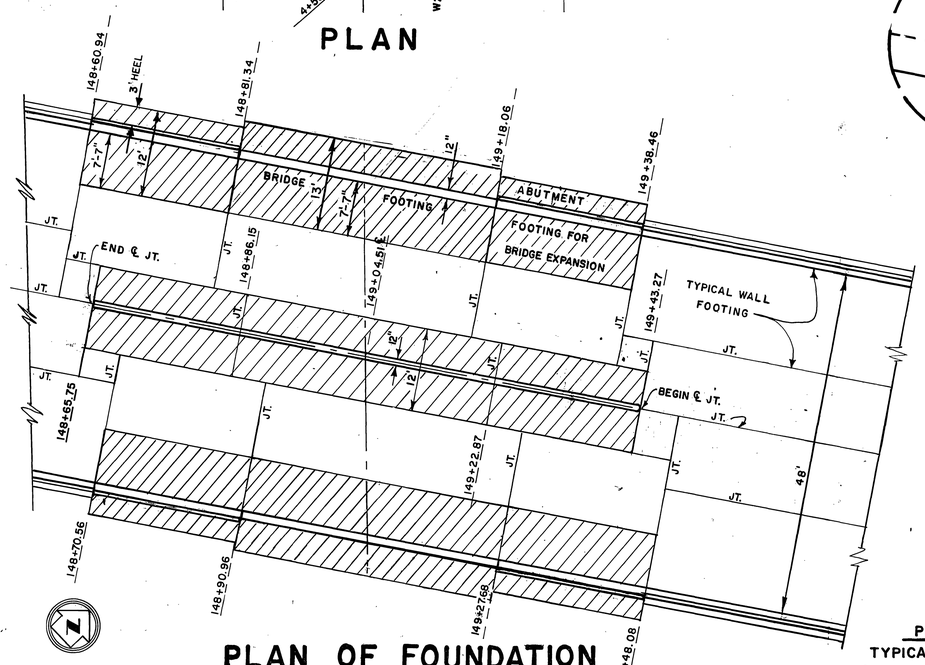

PLAN OF FOUNDATION

NOTES

1. ONE INCH OVERLAY OF A.C.-24' WIDE.
2. JOINT "F" WITH ELEVATION INDICATED BY *... SEE SH. 29.
3. 6' WIDE GATE.
4. 12"-INCH IRRIGATION (IRR.-12) TO BE RELOCATED BY CONTRACTOR. SEE DETAILS ON SH. 41. AND SEE SPECIAL PROVISIONS.
5. 2-INCH WATER (W2) TO BE ABANDONED.
6. 12-INCH WATER (W12), TO BE RELOCATED TO CLEAR THE NEW CHANNEL, SEE SH. 48.
7. 3-INCH A.C. ON 6 INCH A.B. CLASS 3.

   F_y = 60,000 p.s.i., F_c' = 4000 p.s.i.
8. INSTALL 3/4" ROUND GALV. STEEL STEPS. TOP STEP SHALL BE 1' FROM TOP OF WALL, OTHERS AT 16" O.C., BOTTOM STEP AT 1.27' ABOVE INVERT, MIN. WALL EMB. = 4 INCHES. SEE STD. DWG. SHEET. 40.

PLAN TYPICAL SCALE: 10' 0 10'

PROFILES: 10' 0 10' VERT.; 20' 0 20' HORIZ.

REVISIONS			
C14	Deck Steel Modified See Sh. 29	A.M.	11/15/76
REF.	DESCRIPTION	APPR.	DATE

AS BUILT

RIVERSIDE COUNTY FLOOD CONTROL AND WATER CONSERVATION DISTRICT

DESIGNED BY: N.L.S.
DRAWN BY: K.R.B.
DATE DRAWN: JULY 1974
CHECKED BY: D.M.M.

APPROVED BY: John W. Bryant
CHIEF ENGINEER R.E. NO. 8822
DATE: 3-11-75

ARLINGTON STORM CHANNEL
Mc KINLEY ST., BRIDGE DETAILS
1970 STORM DRAIN BOND ISSUE PROJECT NO. 25

D-304

PROJECT NO. 1-0-020
DRAWING NO. 1-294
SHEET NO. 28 OF 57

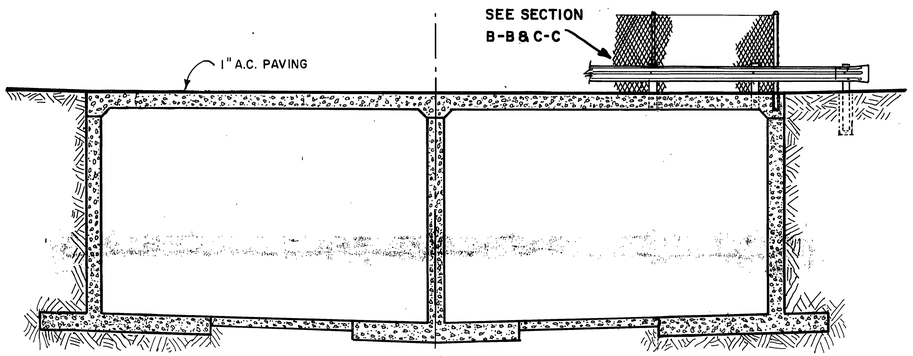

SCHEMATIC

5' 0 5'

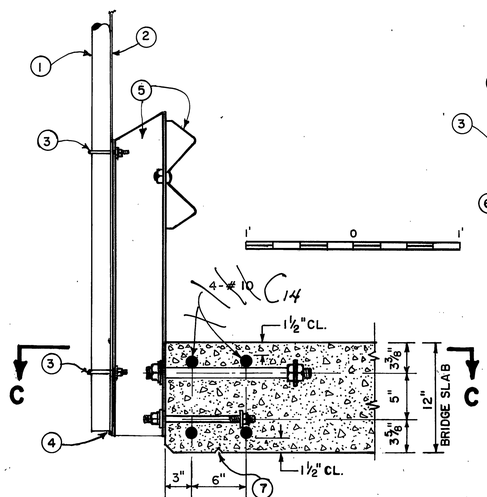

SECTION B-B

1' 0 1'

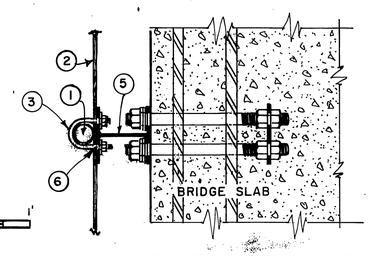

SECTION C-C

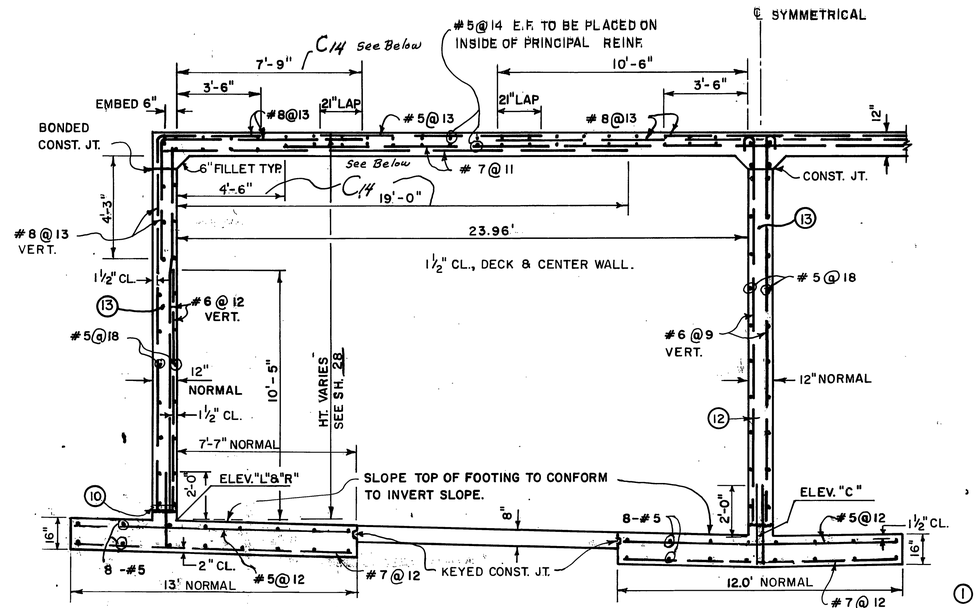

SECTION A-A

3' 0 3'

STEEL ON TOP OF DECK
PLAN VIEW

C14

NO SCALE

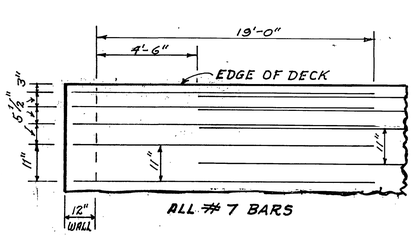

STEEL ON BOTTOM OF DECK
PLAN VIEW

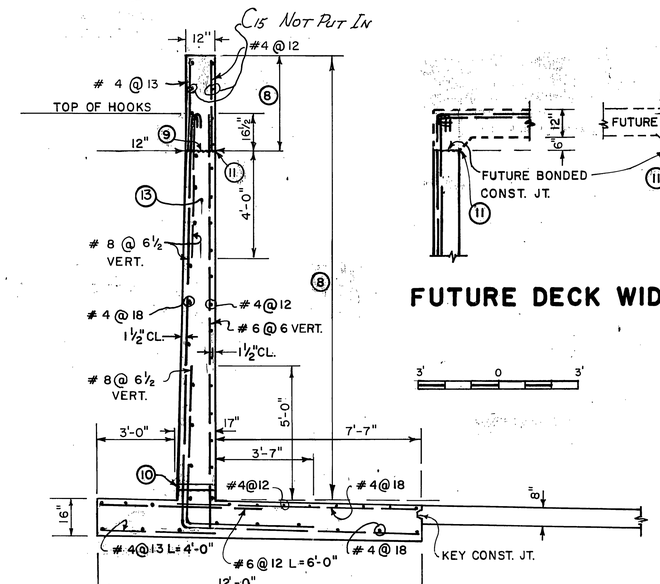

ABUTMENTS

SEE SH. 28 FOR STATIONS

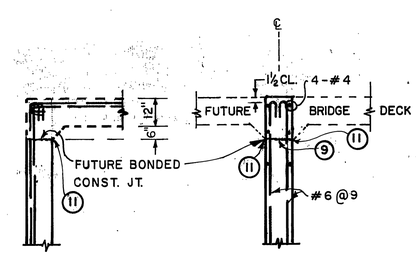

FUTURE DECK WIDENING

3' 0 3'

NOTES

BEGIN BRIDGE, ℄ STA. 148+86.15; END BRIDGE, ℄ STA. 149+22.87.

FOR ELEVATIONS "L" & "R" & "C" = (LEFT, RIGHT, & ℄)
SEE PROFILE ON SHEET 28.

WALL THICKNESSES AND FOOTING WIDTHS ARE MEASURED PERPENDICULAR TO CHANNEL ℄. SEE PLAN OF FOUNDATION, SHEET 28.
F_y = 60,000 p.s.i., F'_c = 4000 p.s.i.
LENGTH OF REINF. SHOWN ARE TRUE LENGTHS.
SECTION A-A IS PARALLEL TO ℄ OF Mc KINLEY ST.

BRIDGE DECK, WALLS, FOOTINGS, ABUTMENTS AND FOOTINGS FOR FUTURE DECK WIDENING: fc' = 4000 psi

NOTES

1. FENCE POST 2.375 O.D.
2. 6' CHAIN LINK FENCE SEE SHEET 49.
3. 2-U BOLTS REQ. WITH LOCK WASHERS & HEX. NUTS
4. PROVIDE BEAD WELD AT BOT. OF W6X6 FOR FENCE POST SEAT.
5. FOR RAIL & METAL BEAM DETAIL SEE SHEET 51.
6. DRILL HOLES EACH SIDE FOR 2-U BOLTS.
7. ¾" DRIP GROVE.
8. HEIGHT VARIES FOR EXACT LOCATIONS SEE SH. 28.
9. JOINT "F"- APPLY BOND BREAKER TO CONC. AND #6 AND #8 TO AID FUTURE REMOVAL. SEE SHEET 28.
10. FOR WEEP HOLE AND BONDED CONST. JT. SEE SH. 37
11. PLACE ¾" CHAMFER STRIP.
12. R=6" ON UPSTREAM END. ¾" CHAMFER DOWNSTREAM END.
13. CONST. JT. PER DETAIL SHEET 23.

DESIGN DATA: HS 20 & ALT. LOAD,

D-304

REVISIONS			
C15	Not Put In	A.M.	11/5/74
C14	Deck Steel Modified	A.M.	11/5/74
REF.	DESCRIPTION	APPR.	DATE

AS BUILT

RIVERSIDE COUNTY FLOOD CONTROL AND WATER CONSERVATION DISTRICT

DESIGNED BY: N.L.S.
DRAWN BY: K.R.B.
DATE DRAWN: JULY 1974
CHECKED BY: D.M.M.
APPROVED BY: John W. Bryant
CHIEF ENGINEER R.E. NO. 8822
DATE: 3-11-75

ARLINGTON STORM CHANNEL
Mc KINLEY ST., BRIDGE DETAILS
1970 STORM DRAIN BOND ISSUE PROJECT NO. 25

PROJECT NO. 1-0-020
DRAWING NO. 1-294
SHEET NO. 29 OF 57

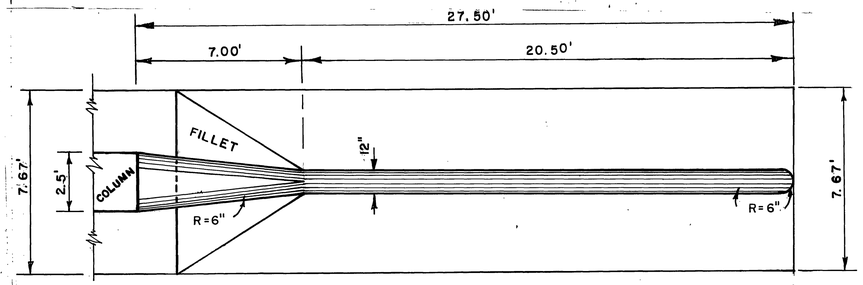

PLAN VIEW

FREEWAY OVERPASS PIER NOSING

3' 0 3'

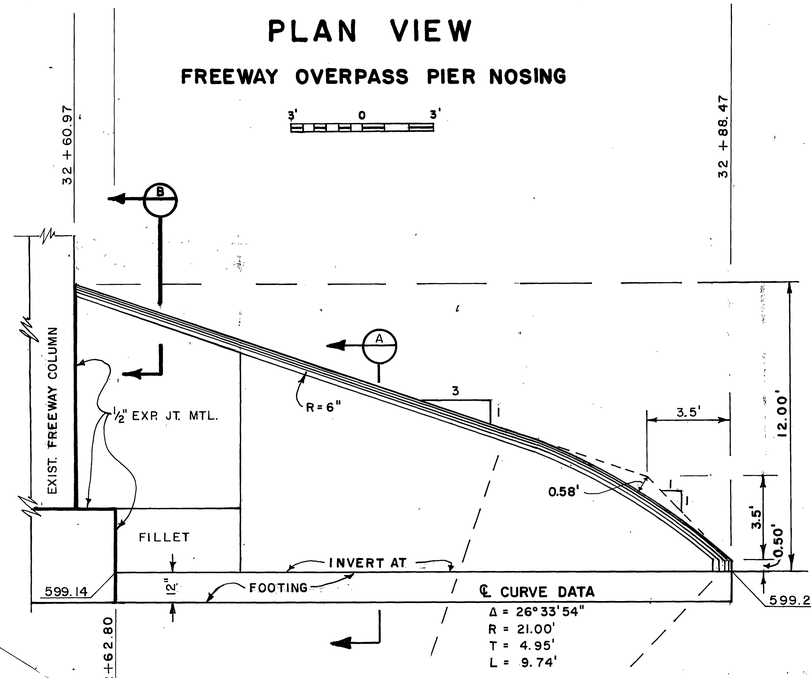

ELEVATION

3' 0 3'

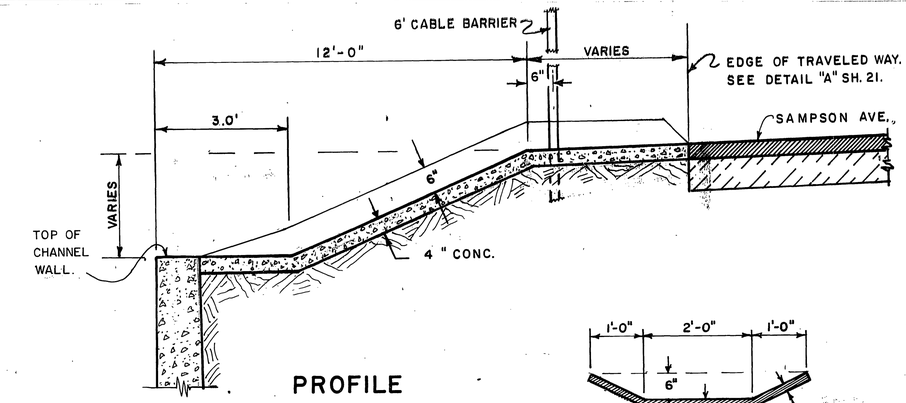

PROFILE

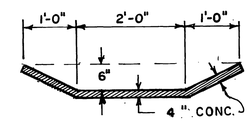

SECTION D-D

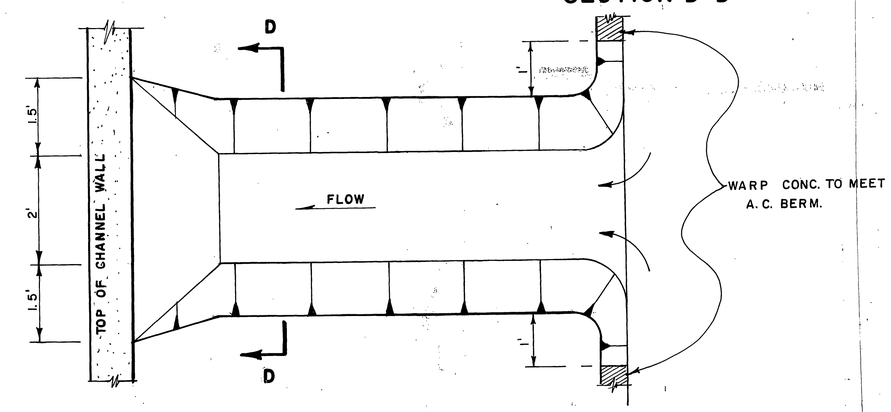

PLAN VIEW

STREET DRAIN DETAILS

1' 0 1'

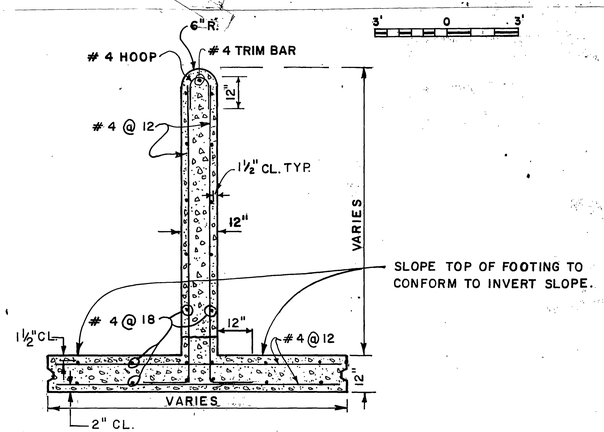

SECTION A

2' 0 2'

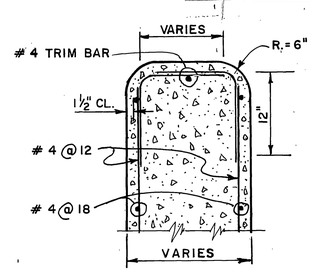

SECTION B

1' 0 1'

NOTE

LOCATIONS OF STREET DRAINS ARE STATIONED ON PLAN - PROFILE SHEETS.
STA. 99+20, 124+44, 124+90, 126+89, 129+52
133+12, 138+48, 141+65, 143+46, 146+94.

D-304

REVISIONS			
	No Change		
REF.	DESCRIPTION	APPR.	DATE

AS BUILT

RIVERSIDE COUNTY FLOOD CONTROL AND WATER CONSERVATION DISTRICT

DESIGNED BY: N.L.S.
DRAWN BY: K.R.B.
DATE DRAWN: AUG. 1974
CHECKED BY: D.M.M.

APPROVED BY: John W. Bryant
CHIEF ENGINEER R.E. NO. 8822
DATE: 3-11-75

ARLINGTON STORM CHANNEL
PIER NOSING DETAILS
AND STREET DRAINS
1970 STORM DRAIN BOND ISSUE PROJECT NO. 25

PROJECT NO. 1-0-020
DRAWING NO. 1-294
SHEET NO. 30 OF 57

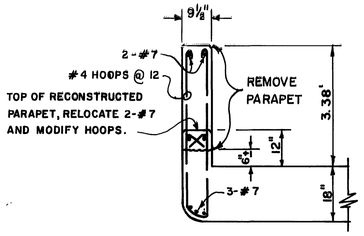

PARAPET DETAIL

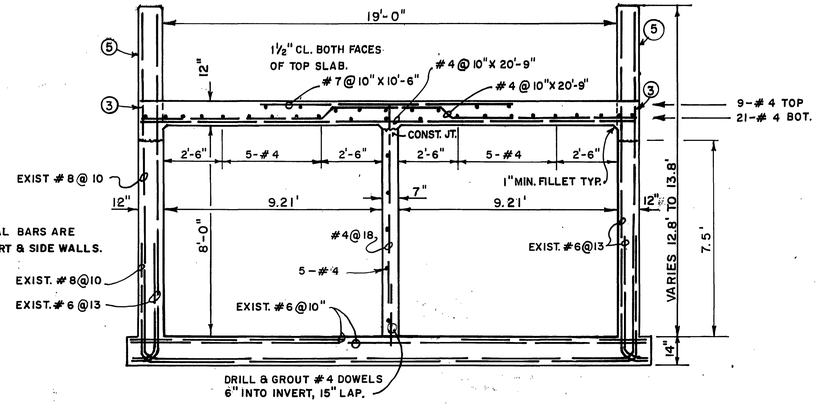

DETAIL "B"

STA. 10+72 TO STA. 10+92

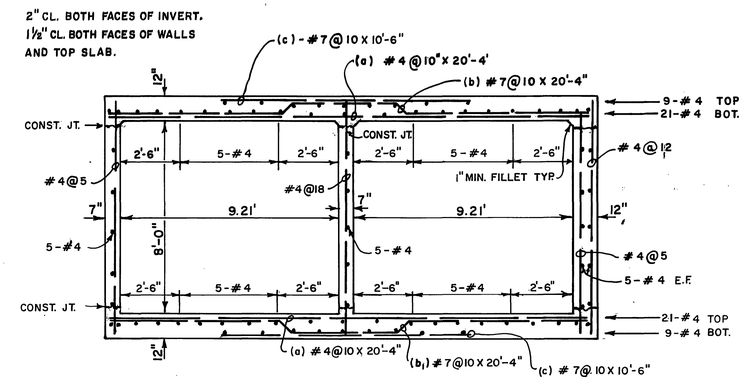

DETAIL "C"

STA. 10+30.5 TO STA. 10+72

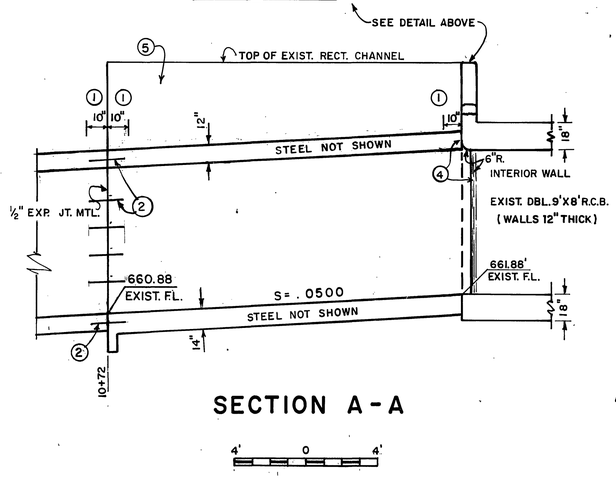

SECTION A-A

NOTES

1. INSTALL TWICE THE TYPICAL AMOUNT OF TRANS. HORIZ. STEEL IN END 10" OF TOP SLAB.
2. INSTALL #4 X 18" DOWELS @ 24" FOR TIE TO NEW R.C.B. (TOP & BOTTOM SLAB & WALLS. DRILL INTO SIDEWALLS AND INVERT TO INSTALL DOWELS).
3. CUT #8 AT 2 INCHES BELOW TOP OF NEW SURFACE.
4. ½" EXP. JT. MTL. AT TOP SLAB & INTERIOR WALL
5. REMOVE TOP OF WALL CONC. TO PERMIT MODIFICATION TO DBL. 9.21' X 8' R.C.B. SEE DETAIL "B".
6. #4 HOOPS @ 12" (HEIGHTS VARY DUE TO 200' VERT. CURVE IN TOP OF WALL.
7. ¾" CHAMFER AT SOFFIT.
8. EXTEND CENTER WALL TO FACE OF PARAPET.
9. #4 @ 12"

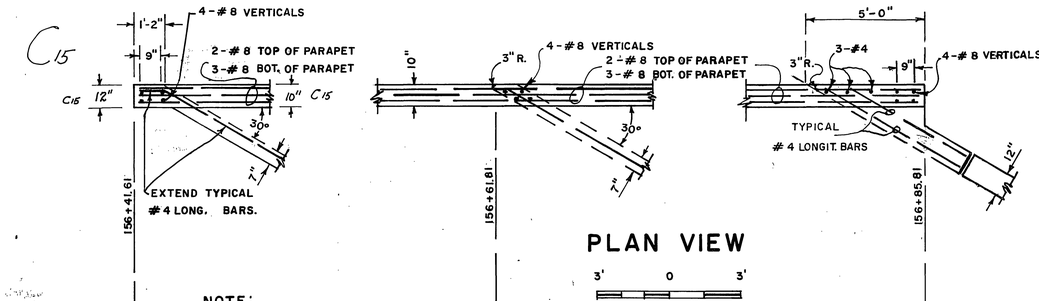

PLAN VIEW

3' 0 3'

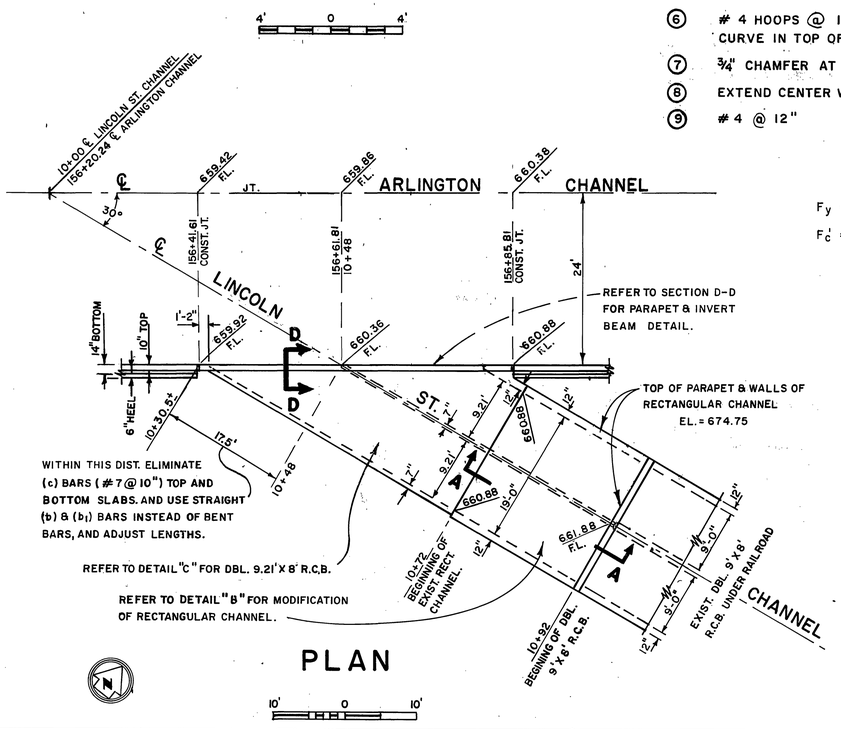

PLAN

F_y = 60,000 p.s.i.

F_c' = 3000 p.s.i.

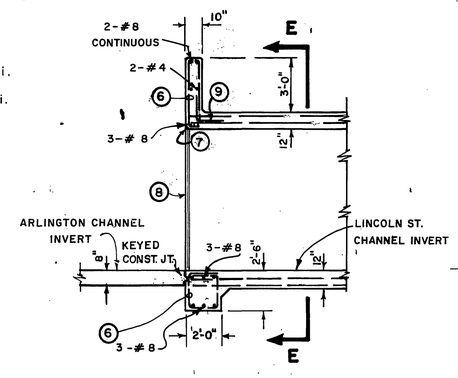

SECTION D-D

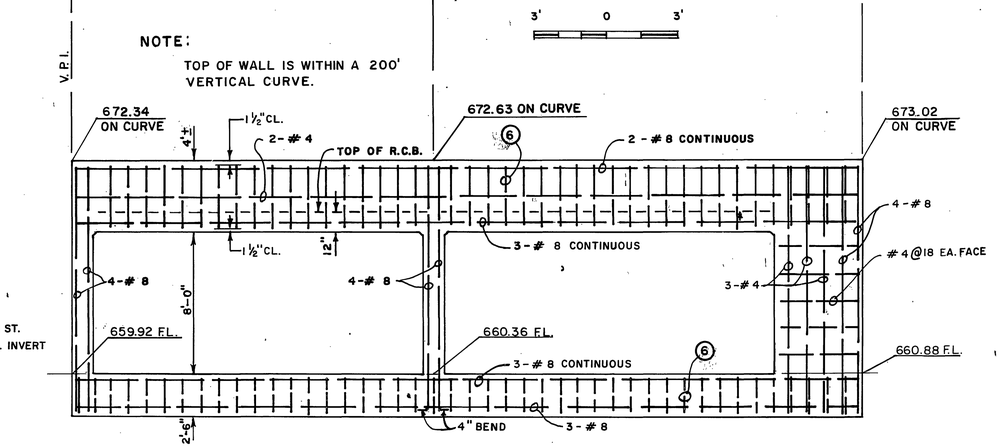

SECTION E-E

4' 0 4'

REVISIONS			
C15	Change As Shown	A.M.	11/9/71
REF.	DESCRIPTION	APPR.	DATE

AS BUILT

RIVERSIDE COUNTY FLOOD CONTROL AND WATER CONSERVATION DISTRICT

DESIGNED BY: N.L.S.
DRAWN BY: K.R.B.
DATE DRAWN: APR. 1974
CHECKED BY: D. M. M.

APPROVED BY: John K. Bryant
CHIEF ENGINEER R.E. NO. 8822
DATE: 3-11-75

ARLINGTON STORM CHANNEL
LINCOLN ST. CHANNEL JUNCTION STRUCTURE
1970 STORM DRAIN BOND ISSUE PROJECT NO. 25

D-304

PROJECT NO. 1-0-020
DRAWING NO. 1-294
SHEET NO. 31 OF 57

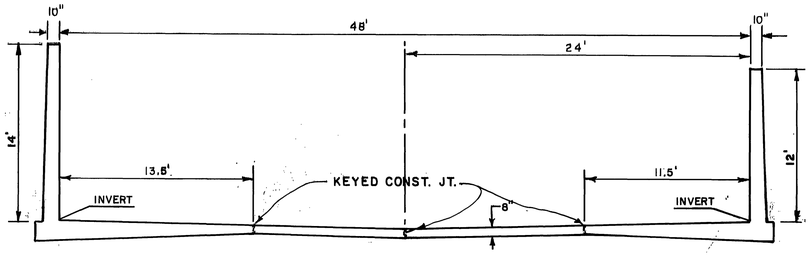

SECTION A-A
TYPICAL CHANNEL SECTION
STA. 193+00 TO STA. 198+70

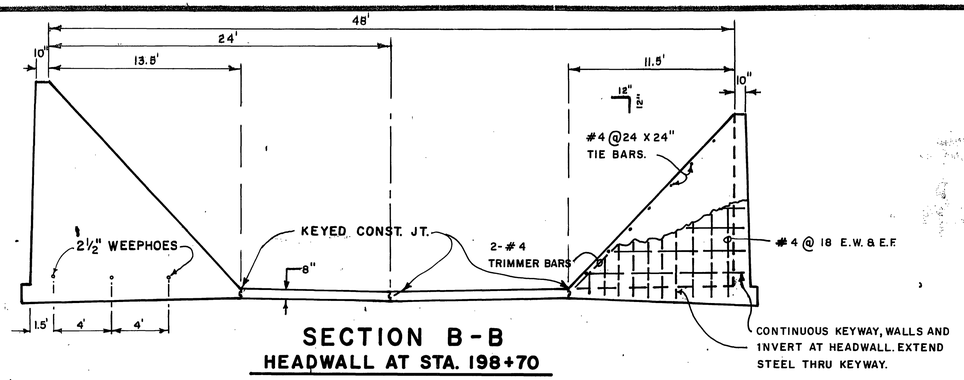

SECTION B-B
HEADWALL AT STA. 198+70

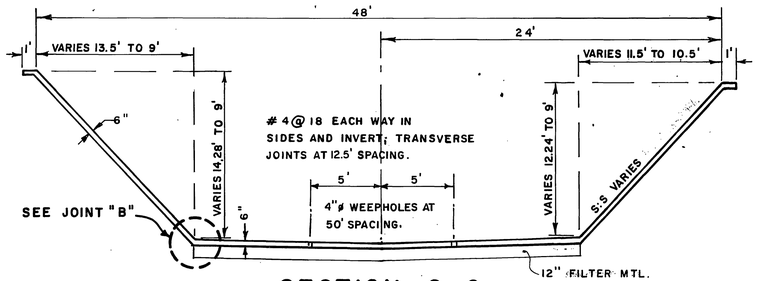

SECTION C-C
CHANNEL TRANSITION
STA. 198+70 TO STA. 200+21.0

NOTE:

1. THE 6" CONCRETE LINED, UNREINFORCED, TRAPEZOIDAL CHANNEL AND 3' DEEP CUTOFF WALL BEGINS AT STA. 199+29.2 REMOVE THIS CHANNEL FROM STA. 199+29.2 TO STA. 200+21.0
2. INSTALL ¾"ϕ ROUND GALV. STEEL STEPS. TOP STEP SHALL BE 1' FROM TOP OF WALL, OTHERS AT 16" O.C., BOTTOM STEP AT 1.67' ABOVE INVERT. MIN. WALL EMB. = 4 INCHES. SEE STD. DWG. SHEET. 40.

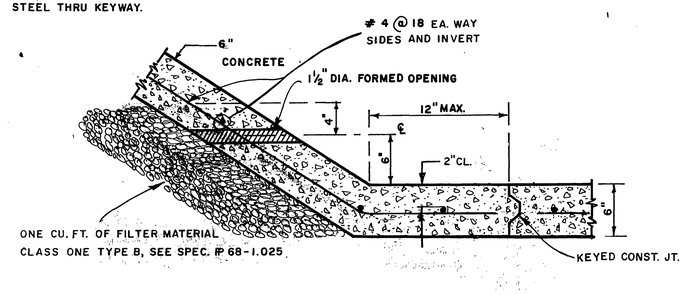

JOINT "B"

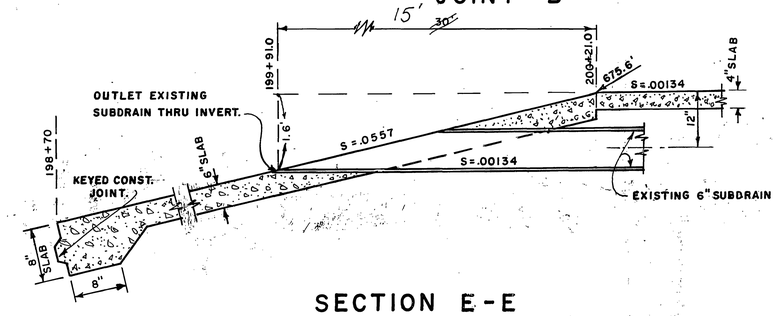

SECTION E-E
INVERT SLAB
NO SCALE

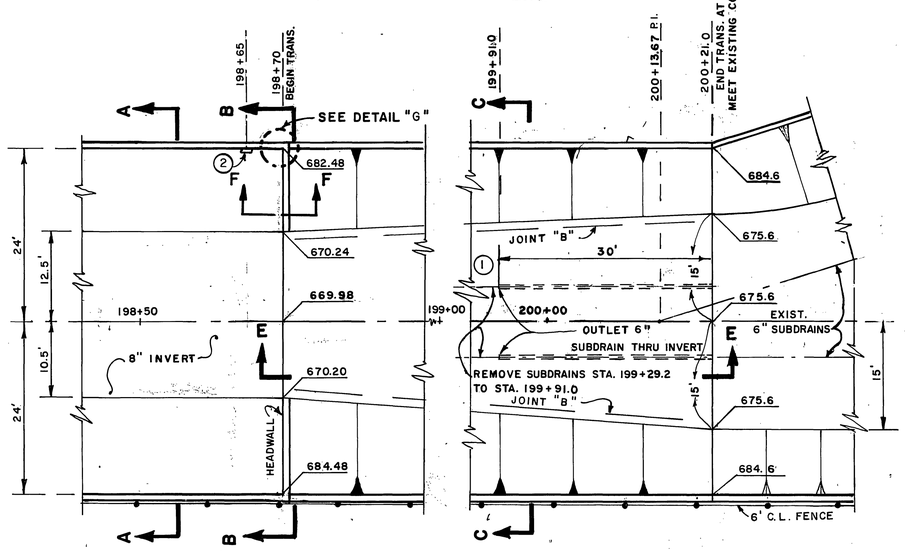

PLAN
CHANNEL TRANSITION

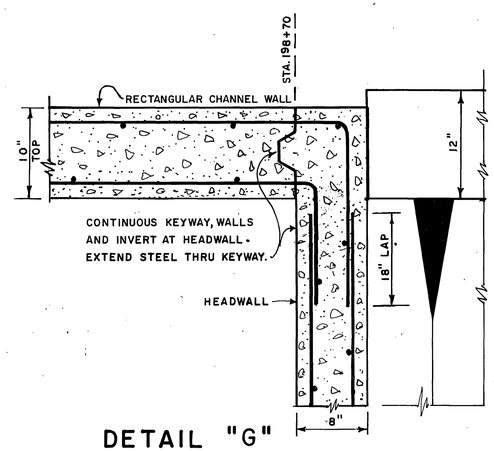

DETAIL "G"

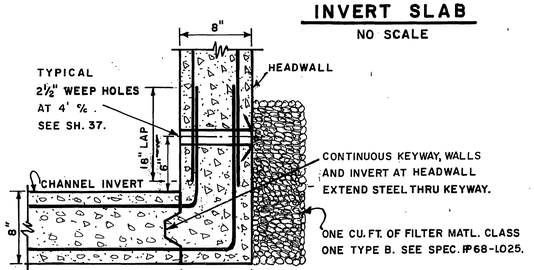

SECTION F-F

STA. 198+70

TYPICAL SCALE

1' 0 1'

TYPICAL SCALE

10' 0 10'

D-304

REVISIONS			
Ch.	Change As Shown	A.M.	11/15/76
REF.	DESCRIPTION	APPR.	DATE

AS BUILT

RIVERSIDE COUNTY FLOOD CONTROL AND WATER CONSERVATION DISTRICT

DESIGNED BY: N. L. S.
DRAWN BY: K. R. B.
DATE DRAWN: APRIL 1974
CHECKED BY: D. M. M.

APPROVED BY: John W. Bryant
CHIEF ENGINEER-R.E. NO. 8822
DATE: 3-11-75

ARLINGTON STORM CHANNEL
TRANSITION TO LA SIERRA CHANNEL
1970 STORM DRAIN BOND ISSUE PROJECT NO. 25

PROJECT NO. 1-0-020
DRAWING NO. 1-294
SHEET NO. 32 OF 57

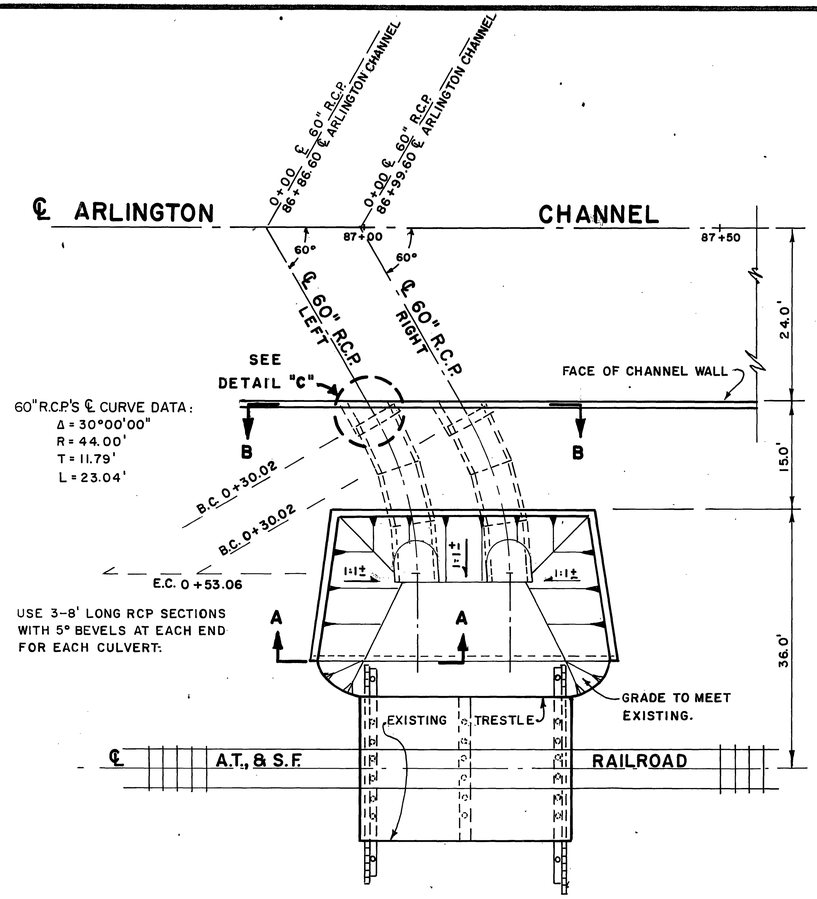

SIDE INLET AT STA. 87+00±

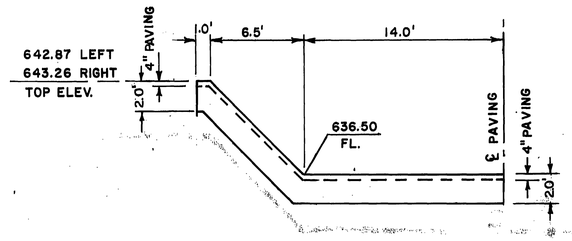

SECTION A-A

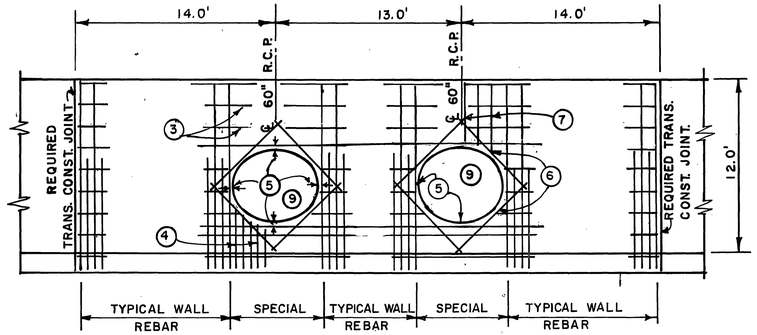

SECTION B-B

TYPICAL SCALE
5' 0 5'

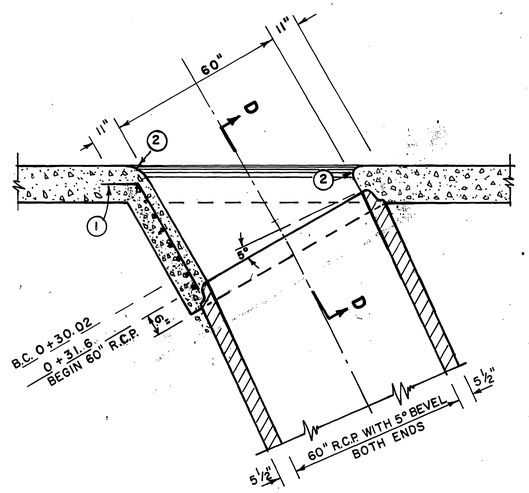

DETAIL "C"

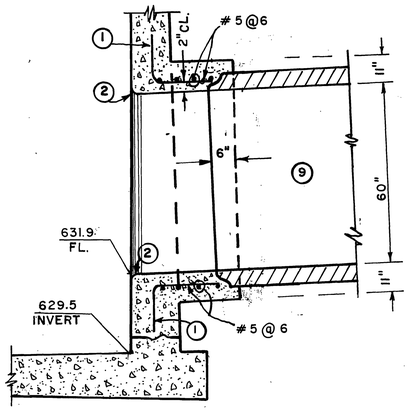

SECTION D-D

TYPICAL SCALE
2' 1' 0 2'

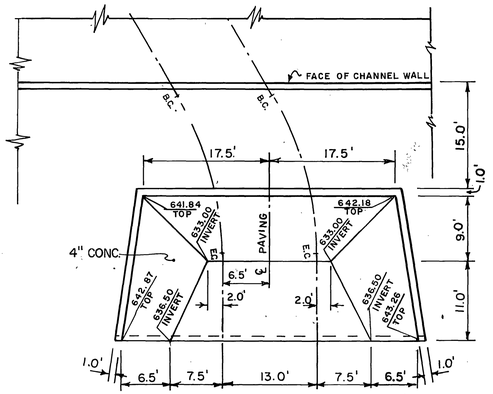

PAVING LAYOUT DETAIL

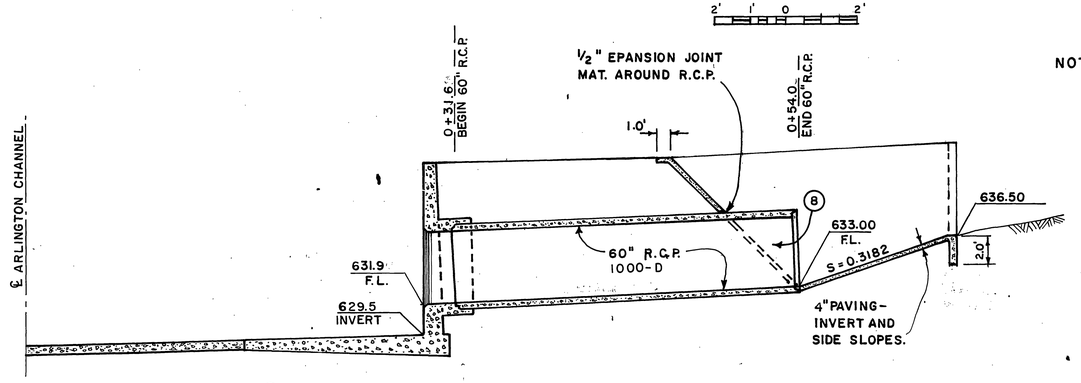

℄ PROFILE 60" R.C.P.

TYPICAL SCALE
5' 0 5'

TYPICAL SCALE
10' 0 10'

NOTES:

1. BEND AND EXTEND 12" INTO WALL.
2. 4 INCH RADIUS.
3. CONTINUE LONG. REBAR THRU SPECIAL SECTION ON TOP AND BOTTOM.
4. USE TYPICAL VERT. REBAR EA. FACE BELOW 60" R.C.P.
5. 2 INCHES CLEAR ALL AROUND. ADD LONG. REBAR AS REQUIRED.
6. ADD #4 BARS DIAG. EA. FACE.
7. USE TYPICAL VERT. REBAR ON INSIDE FACE; USE #4@18 ON OUTSIDE FACE ABOVE 60" R.C.P.
8. DO NOT CUT OFF END OF PIPES.
9. A SQUARE JUNCTION STRUCTURE IS PERMITTED.

D-304

REVISIONS			
	No Change		
REF.	DESCRIPTION	APPR.	DATE

RIVERSIDE COUNTY FLOOD CONTROL AND WATER CONSERVATION DISTRICT

DESIGNED BY: N.L.S.
DRAWN BY: K.R.B.
DATE DRAWN: OCT. 1974
CHECKED BY: D.M.M.

APPROVED BY: John W. Bryant
CHIEF ENGINEER R.E. NO. 8822
DATE: 3-11-75

ARLINGTON STORM CHANNEL
2-60" R.C.P. - JUNCTION DETAILS
STA. 87+00±
1970 STORM DRAIN BOND ISSUE PROJECT NO. 25

PROJECT NO. 1-0-020
DRAWING NO. 1-294
SHEET NO. 33 OF 57

AS BUILT

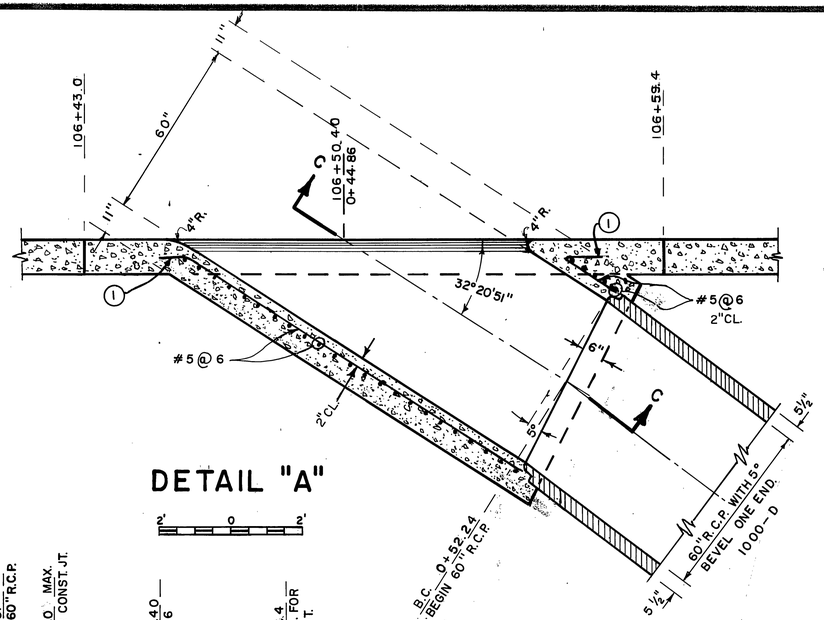

DETAIL "A"

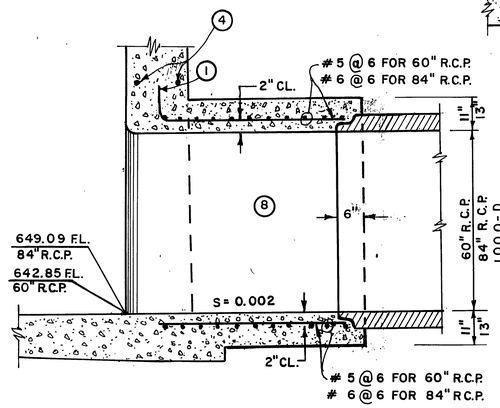

SECTION C-C

NO SCALE

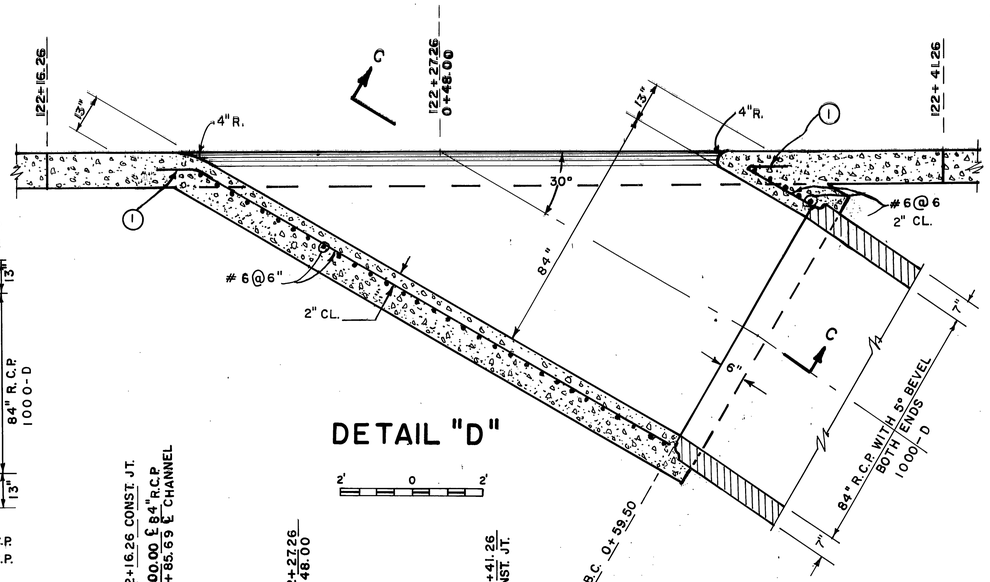

DETAIL "D"

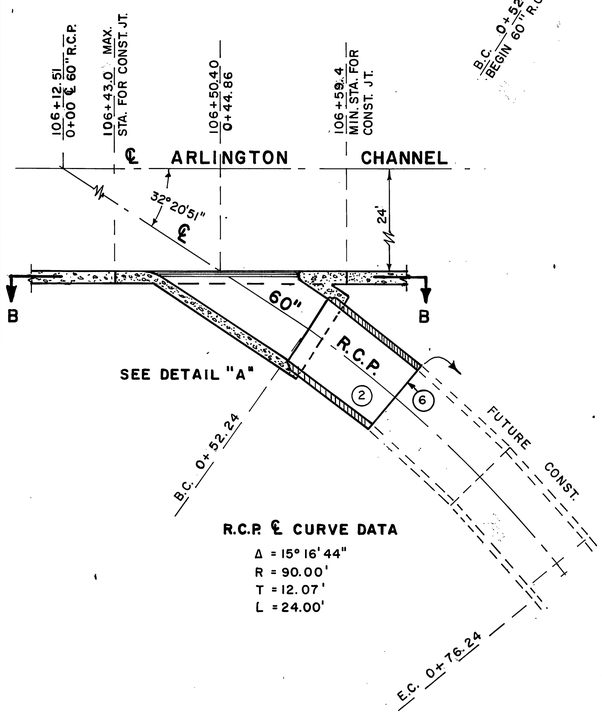

R.C.P. ℄ CURVE DATA

Δ = 15° 16' 44"
R = 90.00'
T = 12.07'
L = 24.00'

PLAN VIEW

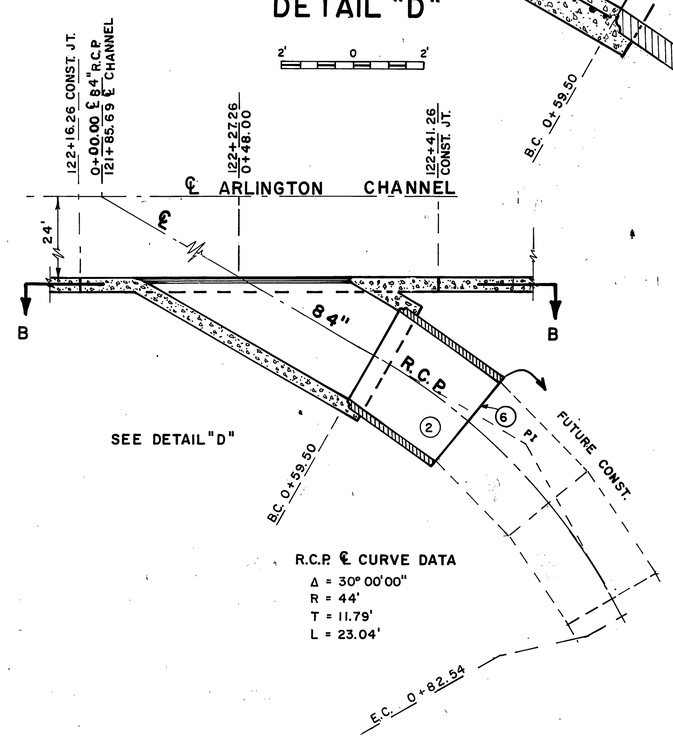

R.C.P. ℄ CURVE DATA

Δ = 30° 00' 00"
R = 44'
T = 11.79'
L = 23.04'

PLAN VIEW

NOTES

1. BEND AND EXTEND 12" INTO WALL.
2. USE 8' LONG R.C.P. SECTIONS WITH 5° BEVELS 84" - BOTH ENDS, 60" - ONE END
4. 60" R.C.P. ADD 1 - #6 X 15' EACH FACE. 84" R.C.P. ADD 1 - #6 X 18' EACH FACE.
5. ADD #4 DIAGONALS EACH FACE.
6. INSTALL BULKHEAD, SEE SH. 52 .
7. USE TYP. VERT. REBAR BOTH FACES.
8. A SQUARE JUNCTION STRUCTURE IS PERMITTED.

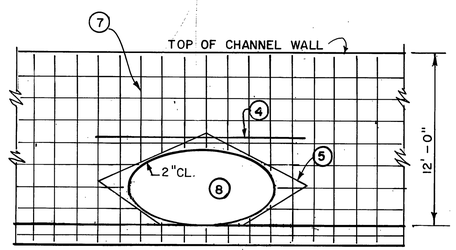

SECTION B-B

REVISIONS			
	No Change		
REF.	DESCRIPTION	APPR.	DATE

AS BUILT

RIVERSIDE COUNTY FLOOD CONTROL AND WATER CONSERVATION DISTRICT

DESIGNED BY: J. L. A.
DRAWN BY: K. R. B.
DATE DRAWN: OCT. 1974
CHECKED BY: D. M. M.

APPROVED BY: John W. Bryant
CHIEF ENGINEER R.E. NO. 8822
DATE: 3-11-75

ARLINGTON STORM CHANNEL
60" & 84" R.C.P.
JUNCTION DETAILS
1970 STORM DRAIN BOND ISSUE PROJECT NO. 25

D-304

PROJECT NO. 1-0-020
DRAWING NO. 1-294
SHEET NO. 34 OF 57

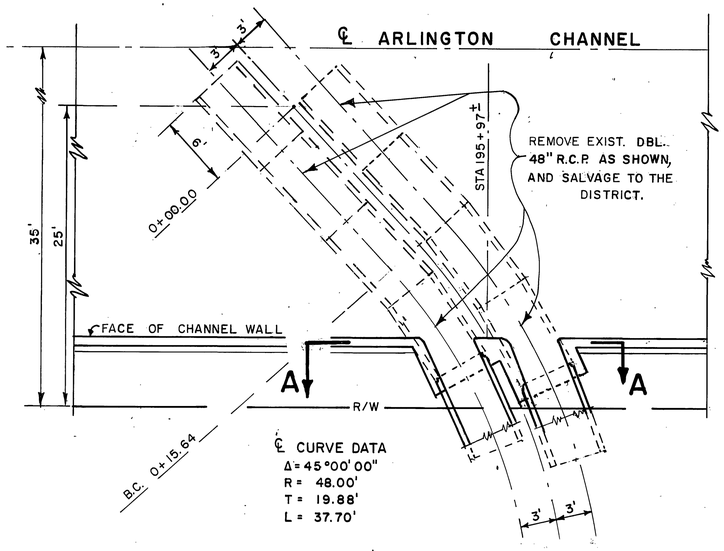

PLAN VIEW

6' 0 6'

CHANNEL WALL REINF. NOT SHOWN

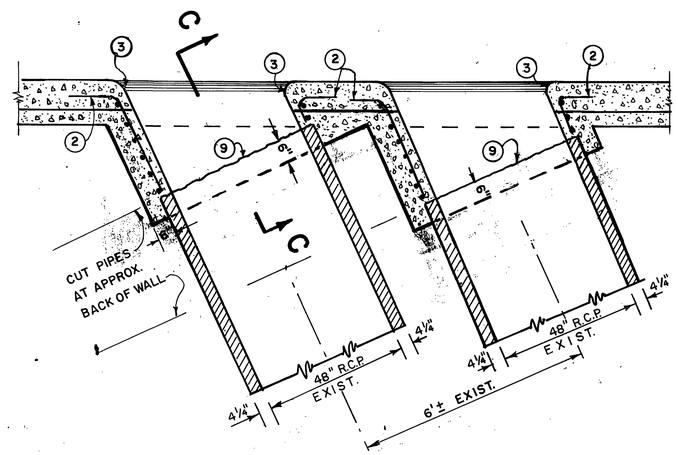

SECTION B-B

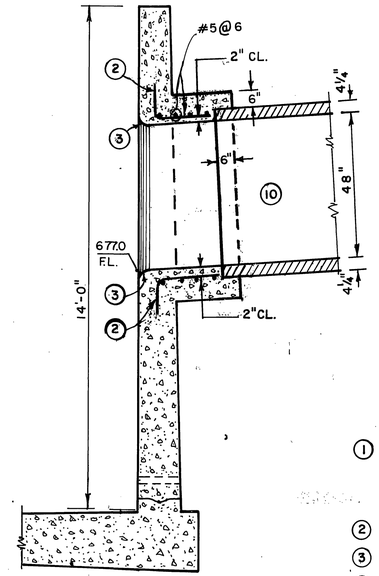

SECTION C-C

TYPICAL SCALE

2' 0 2'

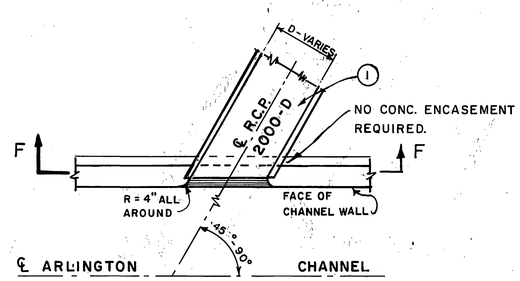

PLAN VIEW

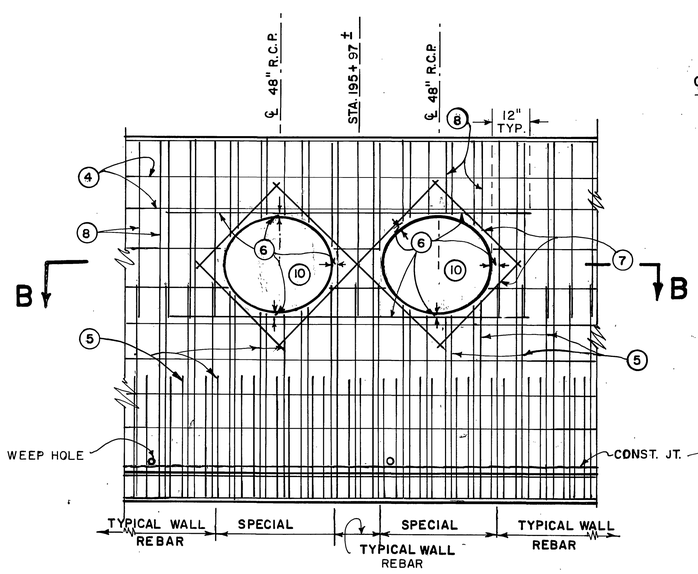

SECTION A-A

3' 0 3'

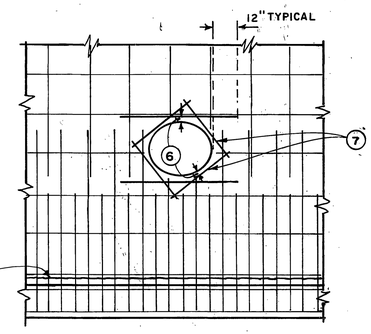

SECTION F-F

2' 0 2'

CULVERT MODIFICATION DETAILS

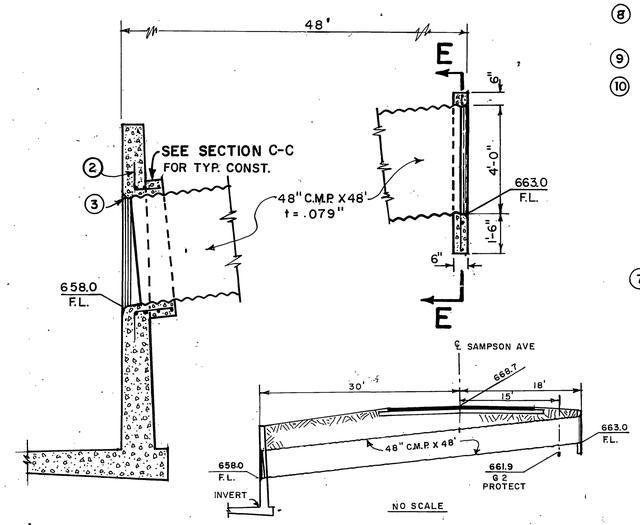

NO SCALE

SIDE INLET AT STA. 124+50

2' 0 2'

NOTES

1. ALL EXISTING C.M.P. SHALL BE CONNECTED TO CHANNEL BY MEANS OF AN 8' LENGTH OF R.C.P., MIN. SIZE R.C.P. USED SHALL BE 18". USE CONC. COLLAR PER SHEET 46.
2. BEND AND EXTEND 12" INTO WALL.
3. 4-INCH RADIUS.
4. CONTINUE LONG. REBAR THRU SPECIAL SECTION ON TOP AND BOTTOM.
5. USE TYPICAL VERTICAL REBAR EACH FACE BELOW 48" R.C.P.
6. 2-INCHES CLEAR ALL AROUND. ADD LONG. REBAR AS REQUIRED, EXTEND 12".
7. ADD #4 BARS DIAG. EACH FACE FOR PIPES GREATER THAN 24" I.D.
8. USE TYPICAL REBAR ON INSIDE FACE ; USE #4 @ 18 ON OUTSIDE FACE ABOVE 48" R.C.P'S.
9. EXISTING 48" R.C.P'S. MAY BE CUT.
10. A SQUARE JUNCTION STRUCTURE IS PERMITTED.

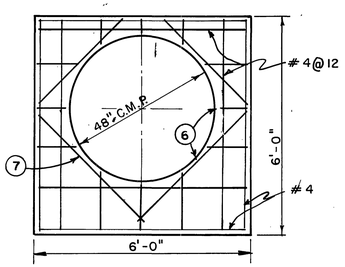

SECTION E-E

REVISIONS			
REF.	DESCRIPTION	APPR.	DATE
	No Change		

AS BUILT

RIVERSIDE COUNTY FLOOD CONTROL AND WATER CONSERVATION DISTRICT

DESIGNED BY: K.R.B.
DRAWN BY: K.R.B.
DATE DRAWN: AUG. 1974
CHECKED BY: N.L.S.

APPROVED BY: John W. Bayard
CHIEF ENGINEER R.E. NO. 8822
DATE: 3-11-75

ARLINGTON STORM CHANNEL
SIDE INLET DETAILS, 2-48" R.C.P., 48" R.C.P., 48" C.M.P., & MISC. INLETS.
1970 STORM DRAIN BOND ISSUE PROJECT NO. 25

D-304

PROJECT NO. 1-0-020
DRAWING NO. 1-294
SHEET NO. 35 OF 57

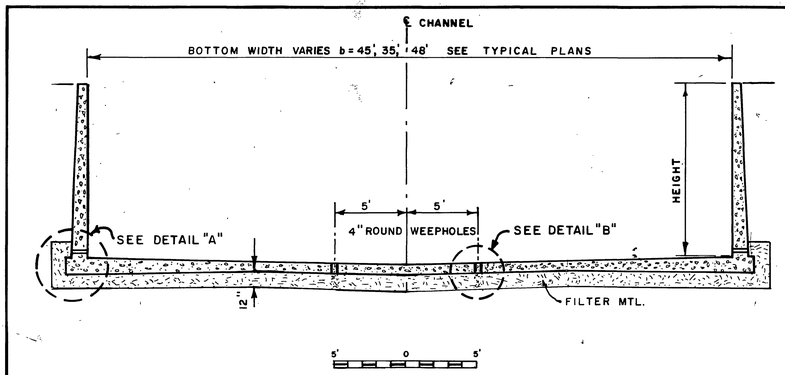

NOTES

1. INSTALL 12" FILTER MTL., AND CONTINUOUS HEEL DRAINS FROM STA. 27+05.77 TO STA. 198+70. CONTINUE FILTER MTL. UNDER TRANSITION INVERT TO STA. 200+21.6
2. 4" DIAM. WEEPHOLES FILLED WITH FILTER MTL. 5' EACH SIDE OF ℄ AND SPACED AT 100' INTERVALS.
   C/T *Constructed Sta. 27+05 To Sta. 84+00*
3. LOCATE FIRST PAIR OF LONG BARS APPROX. 2" CL. ABOVE TOP OF WEEPHOLE.
4. 1/4" GALV. WIRE SCREEN - 14 GAGE, ANCHOR IN CONC.
5. 2 1/2" ROUND WEEPHOLE AT 12 1/2 FT. SPACING.
6. HEIGHT VARIES AT FILLER SILL STA. 30+73.79 TO STA. 33+15.02.

P.V.C. PIPE OR SIMILAR MATERIAL MAY BE CAST IN THE CONC. FOR NOTES 2 & 5

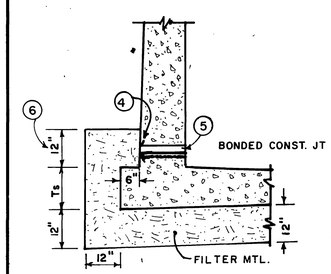

DETAIL "A"

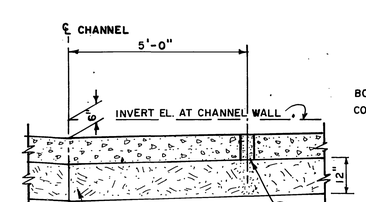

DETAIL "B"

TYPICAL SCALE

2' 0 2'

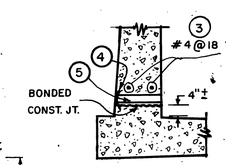

WEEPHOLE DETAIL

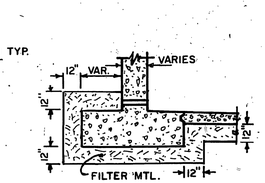

TYPICAL DETAIL AT R. R. ABUTMENT & BRIDGE FOOTING

NO SCALE

D-304

REVISIONS					
C/T REF	Construction Change No. 1 DESCRIPTION			APR.	DATE

RIVERSIDE COUNTY FLOOD CONTROL AND WATER CONSERVATION DISTRICT

DESIGNED BY: N. L. S. | APPROVED BY: John W. Ray and CHIEF ENGINEER R.E. NO. 8822
DRAWN BY: K. R. B.
DATE DRAWN: JAN. 1975
CHECKED BY: D. M. M. | DATE: 9-11-75

ARLINGTON STORM CHANNEL

FILTER MTL. WEEPHOLE & BONDED CONST. JT.

PROJECT NO. 1-0-020
DRAWING NO. 1-294
SHEET NO. 37 OF 57

AS BUILT

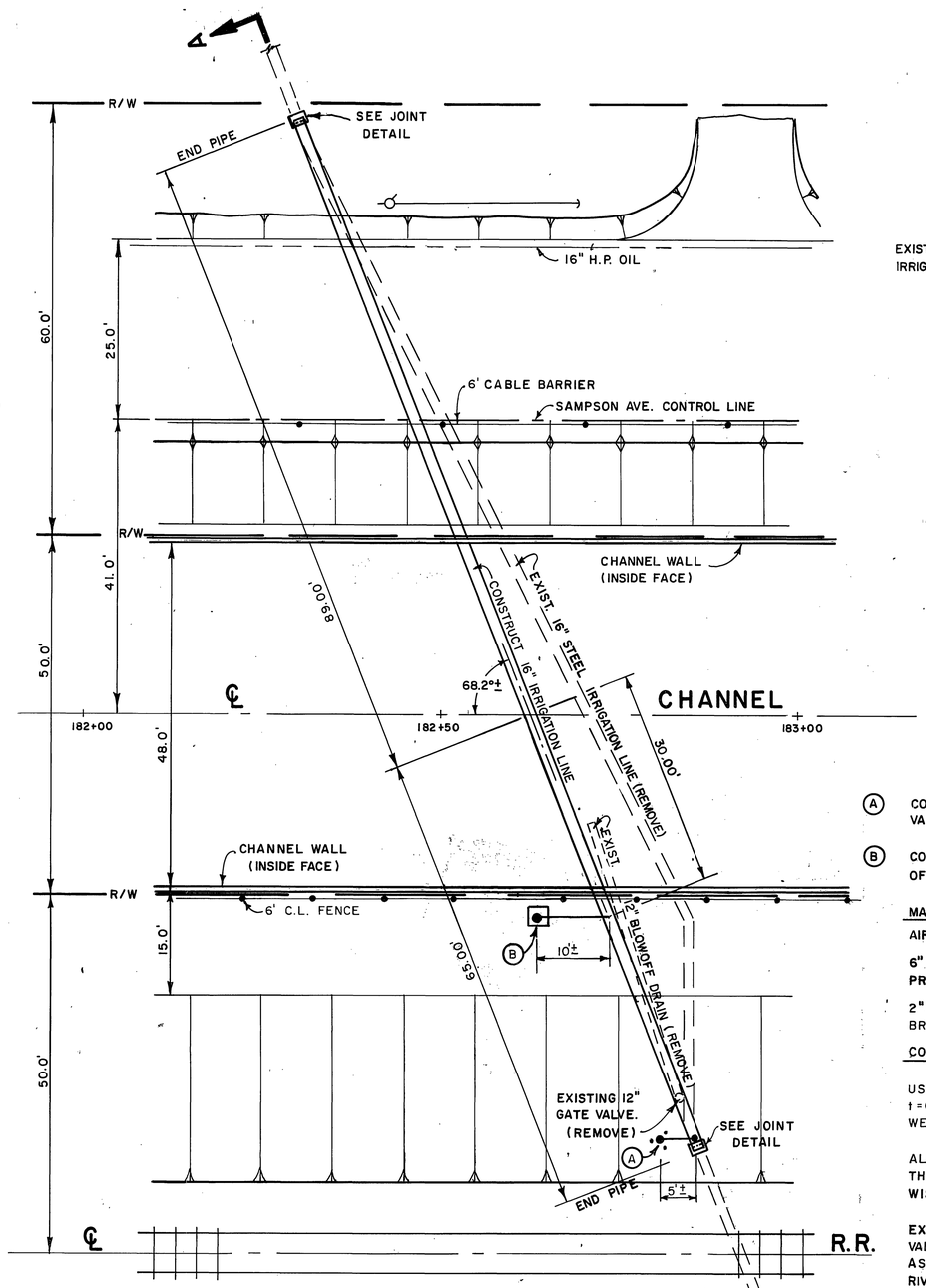

PLAN

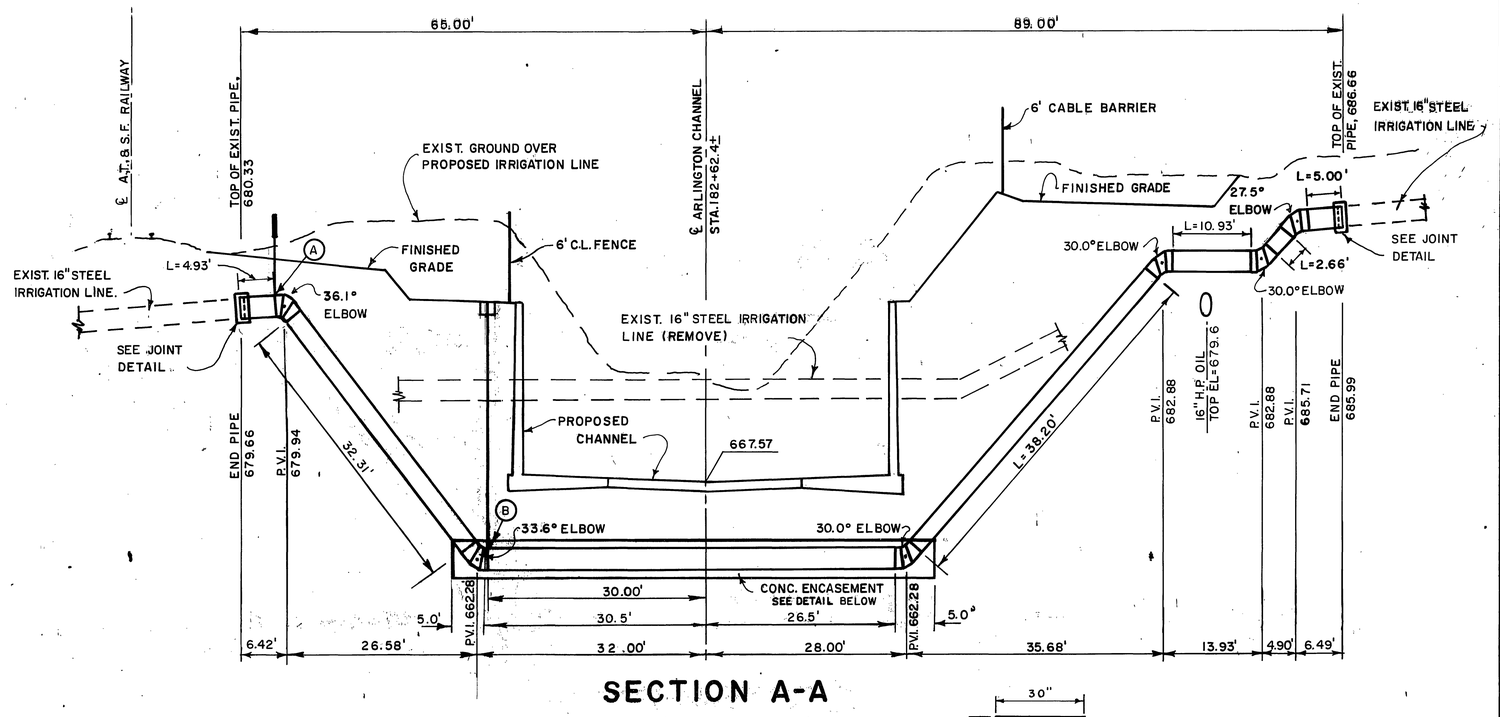

SECTION A-A

HOR. 10' 0 10'
VERT. 5' 0 5'

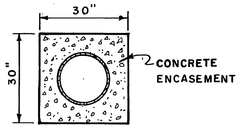

ENCASEMENT

NOTES

(A) CONSTRUCTION CONTRACTOR INSTALL 2" AIR VALVE PER CWD-340, CWD-451 & CWD-900.

(B) CONSTRUCTION CONTRACTOR INSTALL 8" BLOW-OFF PER CWD-320, CWD-405 & CWD-810.

MATERIALS:

AIR VALVE - CRISPEN U-20 OR APCO NO. 145C.

6" BUTTERFLY VALVE - DRESSER "450" OR PRATT "GROUNDHOG".

2" GATE VALVE - STOCKHAM B-115 BRASS OR BRONZE FITTINGS - MUELLER OR JONES.

COPPER PIPE - ASTM B-88, TYPE K

USE 16" CML-AC & W STEEL PIPE, t=0.105 INCH, WITH MECHANICAL COUPLING, WELDED, OR RUBBER GASKET JOINTS.

ALL DIMENSIONS AND ELEVATIONS ARE TO THE CENTER OF THE PIPE UNLESS OTHERWISE INDICATED.

EXISTING STEEL IRRIGATION PIPE AND GATE VALVE TO BE SALVAGED AND STORED AT SITE AS DIRECTED BY ENGINEER, FOR CITY OF RIVERSIDE TO PICK UP.

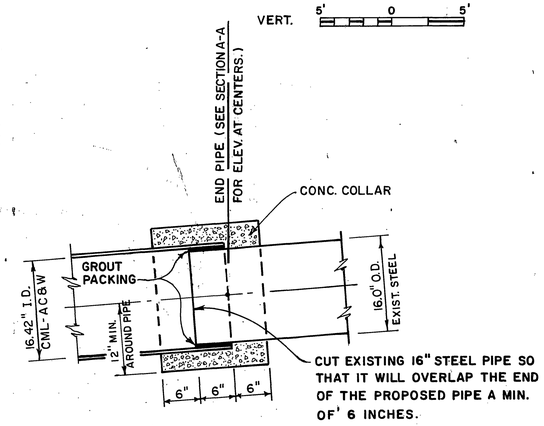

DETAIL OF JOINT WITH EXIST. LINE

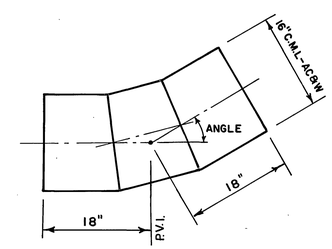

ELBOWS ARE SHOP FABRICATED CONFORMING TO AWWA-208-59 WITH WELDED JOINTS.

DETAIL OF ELBOWS

1' 0 1'

D-304

APPROVED BY CHIEF WATER UTILITY ENGINEER DATE	REVISIONS No Change REF. DESCRIPTION APPR. DATE	RIVERSIDE COUNTY FLOOD CONTROL AND WATER CONSERVATION DISTRICT DESIGNED BY: W.D.G. DRAWN BY: K.R.B. DATE DRAWN: JUNE 1974 CHECKED BY: D.M.M. APPROVED BY: Robert W. Bryant CHIEF ENGINEER R.E. NO. 8822 DATE: 3-11-75	ARLINGTON STORM CHANNEL 16" IRRIGATION LINE RELOCATION STA. 182+62.4 1970 STORM DRAIN BOND ISSUE PROJECT NO. 25	PROJECT NO. 1-0-020 DRAWING NO. 1-294 SHEET NO. 42 OF 57

AS BUILT

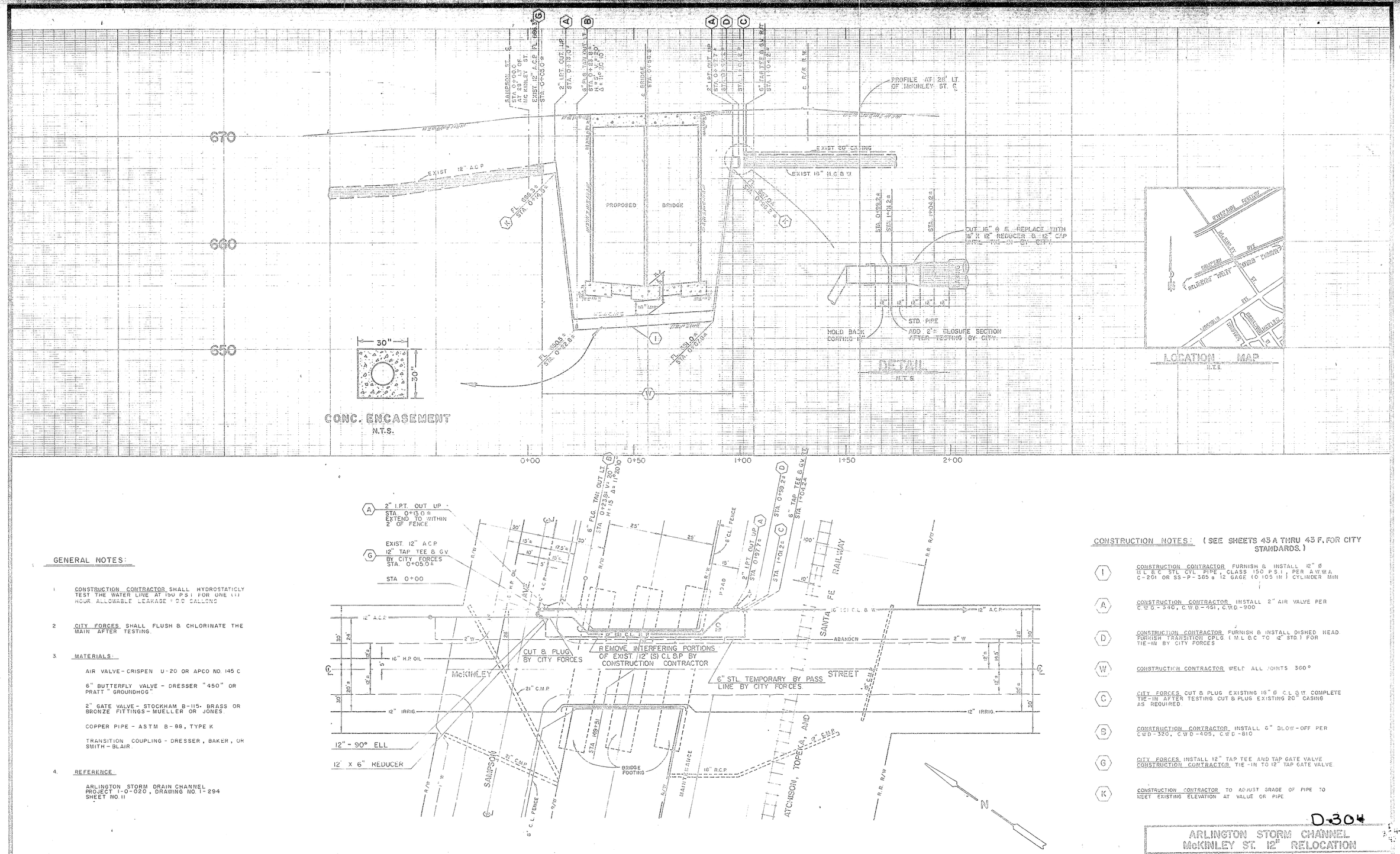

GENERAL NOTES:

1. CONSTRUCTION CONTRACTOR SHALL HYDROSTATICLY TEST THE WATER LINE AT 150 P.S.I. FOR ONE (1) HOUR. ALLOWABLE LEAKAGE 1 G.P. GALLONS
2. CITY FORCES SHALL FLUSH & CHLORINATE THE MAIN AFTER TESTING.
3. MATERIALS:

   AIR VALVE - CRISPEN U-20 OR APCO NO. 145 C

   6" BUTTERFLY VALVE - DRESSER "450" OR PRATT " GROUNDHOG".

   2" GATE VALVE - STOCKHAM B-115. BRASS OR BRONZE FITTINGS - MUELLER OR JONES.

   COPPER PIPE - ASTM B-88, TYPE K

   TRANSITION COUPLING - DRESSER, BAKER, OR SMITH - BLAIR.
4. REFERENCE

   ARLINGTON STORM DRAIN CHANNEL PROJECT I-0-020, DRAWING NO. I-294 SHEET NO. 11

CONSTRUCTION NOTES: (SEE SHEETS 43 A THRU 43 F, FOR CITY STANDARDS.)

- (I) CONSTRUCTION CONTRACTOR FURNISH & INSTALL 12" Ø M.L.&C. STL. CYL. PIPE, CLASS 150 P.S.I.; PER A.W.W.A. C-201 OR SS-P-385 & 12 GAGE (0.105 IN.) CYLINDER MIN.
- (A) CONSTRUCTION CONTRACTOR INSTALL 2" AIR VALVE PER C.W.D.-340, C.W.D.-481, C.W.D.-900
- (D) CONSTRUCTION CONTRACTOR FURNISH & INSTALL DISHED HEAD. FURNISH TRANSITION CPLG. (M.L.&C. TO 12" STD.) FOR TIE-IN BY CITY FORCES
- (W) CONSTRUCTION CONTRACTOR WELD ALL JOINTS 360°
- (C) CITY FORCES CUT & PLUG EXISTING 16" Ø C.L.&W. COMPLETE TIE-IN AFTER TESTING. CUT & PLUG EXISTING 20" CASING AS REQUIRED.
- (S) CONSTRUCTION CONTRACTOR INSTALL 6" BLOW-OFF PER C.W.D.-320, C.W.D.-405, C.W.D.-810
- (G) CITY FORCES INSTALL 12" TAP TEE AND TAP GATE VALVE. CONSTRUCTION CONTRACTOR TIE-IN TO 12" TAP GATE VALVE
- (K) CONSTRUCTION CONTRACTOR TO ADJUST GRADE OF PIPE TO MEET EXISTING ELEVATION AT VALVE OR PIPE

D-304

ARLINGTON STORM CHANNEL McKINLEY ST. 12" RELOCATION			
SCALE H 1" = 20', V 1" = 4'	DRAWN R.C. / R.W.H.	CITY OF RIVERSIDE DEPARTMENT OF PUBLIC UTILITIES	
DATE FEB. 1975	CHECKED B.G.W./F.L.		
JOB No 3468	APPROVED	W	DRAWING NO. D5-3468
	F. B. No G5-752-786-3468	DIV.	

No Change

APPRVD | REVISIONS | DATE

AS BUILT

DWG. NO. I-294 SH. NO. 43 of 87

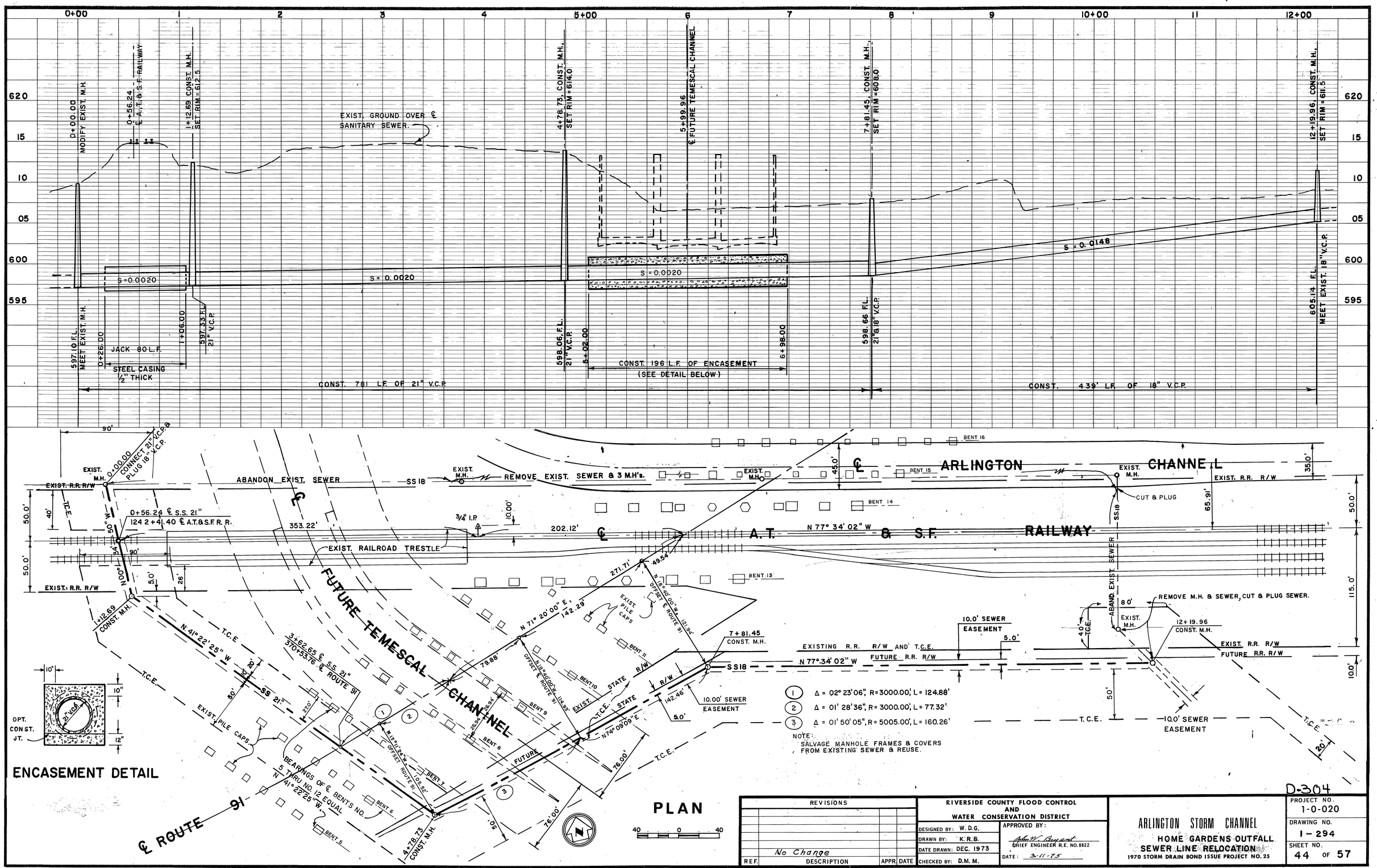

REVISIONS			
REF.	DESCRIPTION	APPR.	DATE
	No Change		

RIVERSIDE COUNTY FLOOD CONTROL AND WATER CONSERVATION DISTRICT

DESIGNED BY: W. D. G.
DRAWN BY: K. R. B.
DATE DRAWN: DEC. 1973
CHECKED BY: D. M. M.
APPROVED BY: John W. Bryant
CHIEF ENGINEER R.E. NO. 8822
DATE: 3-11-75

ARLINGTON STORM CHANNEL
HOME GARDENS OUTFALL SEWER LINE RELOCATION
1970 STORM DRAIN BOND ISSUE PROJECT NO. 25

D-304

PROJECT NO. 1-0-020
DRAWING NO. 1-294
SHEET NO. 44 OF 57

STAGGER HORIZ. LAPS WHERE POSSIBLE.

HORIZ. BARS:
#4, LAP = 18"
#5, LAP = 26"
#9, LAP = 53"
#10, LAP = 68"

VERT. BARS:
#4, LAP = 20"
#5, LAP = 26"

△ FOOTING:
#6, LAP = 26", STAGGERED, OR 34" NOT STAGGERED.
△ 22 SCHT. N.G.

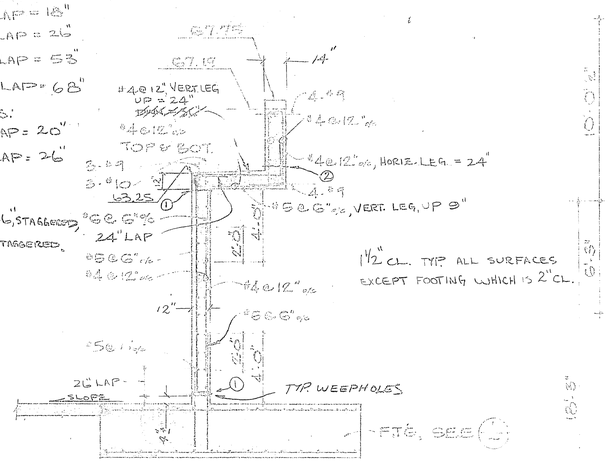

TYPICAL SECTION 3

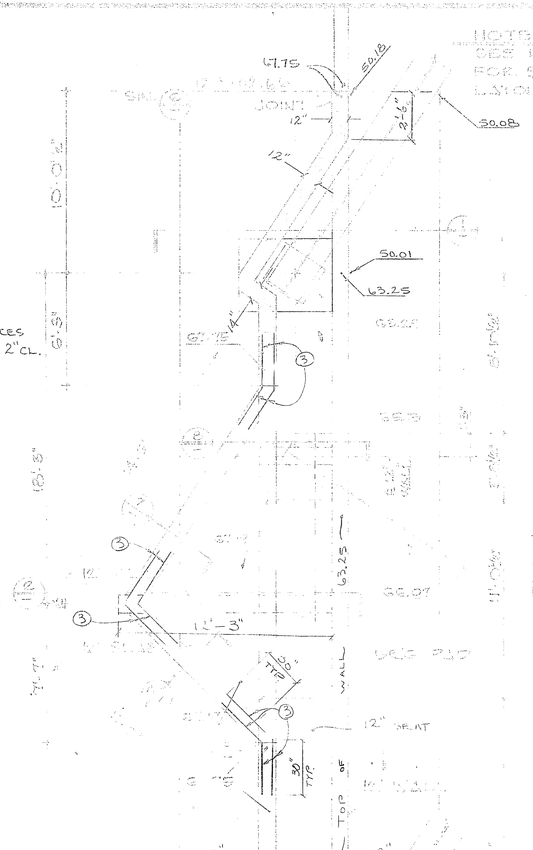

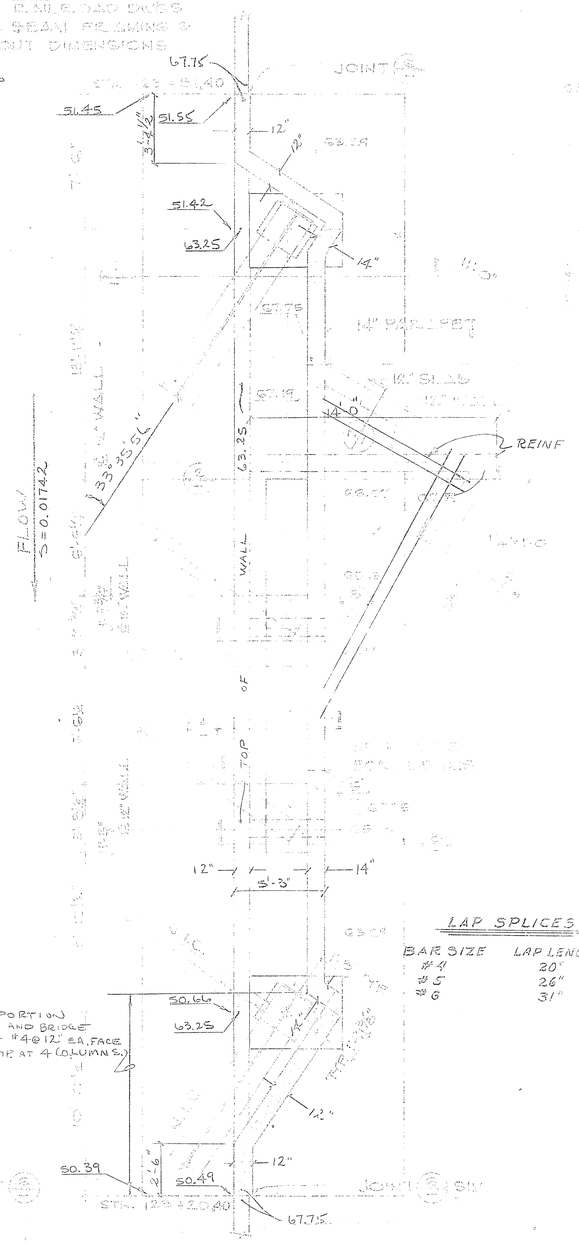

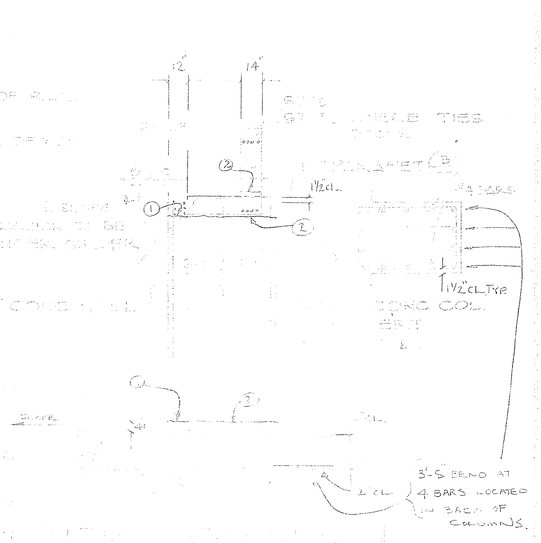

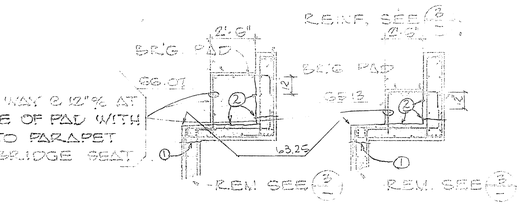

4

5

12" WALL

VARIES 10"-17" WALL

½" ϕ × 18" DOWEL @ 2'-0"

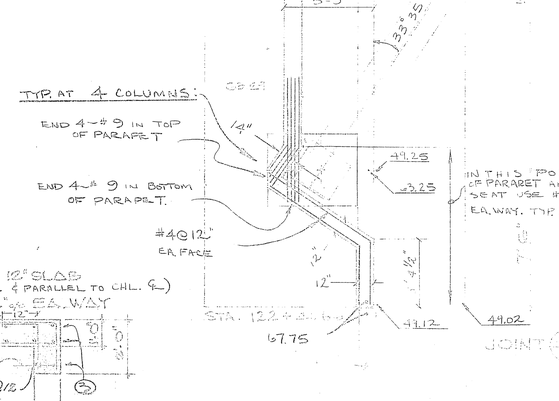

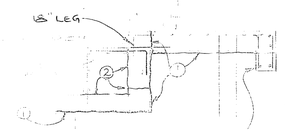

LAP SPLICES

BAR SIZE	LAP LENGTH	90° END HOOK ("A" OR "B")
#4	20"	8"
#5	26"	10"
#6	31"	12"

EXTEND #4 BARS 8" INTO SLAB & WALL

SLOPE

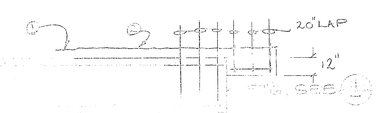

SECTION @ SLAB 2

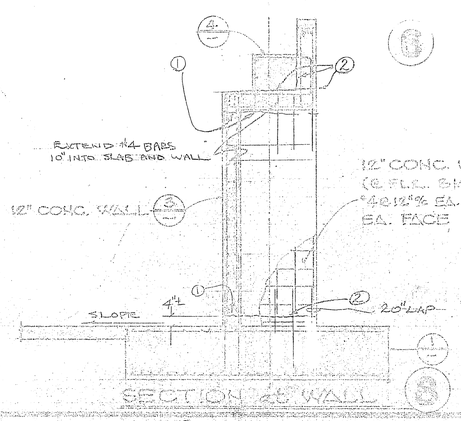

SECTION @ WALL 8

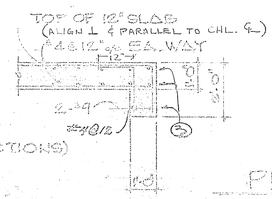

SECTION @ EDGE BEAM 7

PLAN @ NORTH END 6

PLAN @ SOUTH END 5

MAX. DESIGN FOOTING PRESSURE = 4.0 KIPS/SQ. FT.

CONCRETE
f'c = 4000 P.S.I.

REINFORCING STEEL
fs = 24,000 P.S.I.
GRADE 60

SCALE 1" = 4'

Notes:
1. BONDED CONST. JOINT.
2. OPTIONAL BONDED CONST. JOINT.
3. LAP #9 & #4 30" AT THE CORNER AT WALL SECTION 6 AND EXTEND 30" INTO PARAPET WALL. (BOTH ABUTMENTS)

2" CLEAR - BOTTOM OF FOOTING
1½" CLEAR - REMAINDER

D-304

JOHNSON & MELSTA ASSOCIATES
CONSULTING STRUCTURAL ENGINEERS
6210 BOWERS STREET
SPRING, CALIFORNIA 90620

	No Change		
NEAL	CLARIFICATION DETAILS; R.C.F.C.	J.C.B.	15 SEPT 75
	AS CONSTRUCTED (BNT & S.P.S.)		5-6-75
	AS SENT TO A.T.&S.F. & C.O.		10-11-74
CONFERENCE	DESCRIPTION	APPROVED	DATE

REVISIONS

AS BUILT

RIVERSIDE COUNTY FLOOD CONTROL AND WATER CONSERVATION DISTRICT

ARLINGTON STORM CHANNEL
P.R. SPUR - PARKING FOUNDATION & ABUTMENTS

PROJECT NO.

Date: 11-11-74

Scale: 1" = 4'

Date Drawn: 1-2-72

ABBREVIATIONS

AASHTO	AMERICAN ASSOCIATION OF STATE HIGHWAY AND TRANSPORTATION OFFICIALS
AB	AGGREGATE BASE
ABND	ABANDONED
AC	ASPHALT CONCRETE
ACP	ASBESTOS CEMENT PIPE
∠ PT	ANGLE POINT
ASTM	AMERICAN SOCIETY FOR TESTING MATERIALS
AT & SF	ATCHISON, TOPEKA AND SANTA FE
AWWA	AMERICAN WATER WORKS ASSOCIATION
BC	BEGINNING OF CURVE
BCC	BEGINNING OF COMPOUND CURVE
BCR	BEGINNING OF CURB RETURN
BM	BENCH MARK
BVC	BEGINNING OF VERTICAL CURVE
CALC	CALCULATED
CB	CATCH BASIN
CC	CENTER TO CENTER
℄	CENTERLINE
CF	CURB FACE
CFS	CUBIC FEET PER SECOND
C & G	CURB AND GUTTER
C.L.	CHAIN LINK
CIP	CAST IRON PIPE
CL	CLASS OR CLEAR
CMP	CORRUGATED METAL PIPE
CMPA	CORRUGATED METAL PIPE ARCH
CO	CLEAN OUT
CONC	CONCRETE
CONST	CONSTRUCT
COR	CORNER
CP	CONTROL POINT
CY	CUBIC YARDS
DBL.	DOUBLE
D	DIAMETER
Δ	CURVE TOTAL DEFLECTION ANGLE
DG	DECOMPOSED GRANITE
DIA	DIAMETER
DN	DOWN
DWG	DRAWING
DWY	DRIVEWAY
E	EAST OR ELECTRICAL
EA	EACH
EC	END OF CURVE
ECC	END COMPOUND CURVE
ECR	END OF CURB RETURN
EF	EACH FACE
EL	ELEVATION
ELY	EASTERLY
EP	EDGE OF PAVEMENT
EVC	END OF VERTICAL CURVE
EW	EACH WAY
EX	EXISTING
EXCAV	EXCAVATION
F	FIRE
FTG.	FOOTING
FB	FIELD BOOK
FD	FOUND
FH	FIRE HYDRANT
FL	FLOW LINE
FPS	FEET PER SECOND
FT	FEET OR FOOT
FWY	FREEWAY
G	GAS
GALV	GALVANIZED
HT.	HEIGHT
GR.	GRADE
HC	HOUSE CONNECTION
HGL	HYDRAULIC GRADE LINE
HOR	HORIZONTAL
ID	INSIDE DIMENSION
IN	INCH OR INCHES
IP	IRON PIPE
IRR	IRRIGATION
JS	JUNCTION STRUCTURE
L	LENGTH
LBS	POUNDS
JT	JOINT
LD	LOCAL DEPRESSION
LF	LINEAL FEET
LONG	LONGITUDINAL
LS	LUMP SUM OR LAND SURVEYOR
LT	LEFT
L & T	LEAD AND TACK
MAX	MAXIMUM
MCD	MULTIPLE CEMENT DUCT
MEAS	MEASURED
M GAL	THOUSAND GALLONS
MH	MANHOLE
MIN	MINIMUM
MTD	MULTIPLE TILE DUCT
N	NORTH
NLY	NORTHERLY
NO	NUMBER
N & T	NAIL AND TIN
OC	ON CENTER
OD	OUTSIDE DIMENSION
OR	OFFICIAL RECORD
PCC	POINT OF COMPOUND CURVATURE
PI	POINT OF INTERSECTION
PL	PROPERTY LINE
PP	POWER POLE
PPM	PARTS PER MILLION
PRC	POINT OF REVERSE CURVATURE
PSI	POUNDS PER SQUARE INCH
PVC	POLYVINYL CHLORIDE
PVMT	PAVEMENT
Q	RATE OF FLOW
R	RADIUS OR RANGE
RCB	REINFORCED CONCRETE BOX
RCE	REGISTERED CIVIL ENGINEER
RCFC & WCD	RIVERSIDE COUNTY FLOOD CONTROL AND WATER CONSERVATION DISTRICT
RCP	REINFORCED CONCRETE PIPE
RR	RAILROAD
RS	RECORD OF SURVEY
RT	RIGHT
R/W	RIGHT OF WAY
S	SOUTH OR SLOPE
S:S	SIDE SLOPE
SD	STORM DRAIN
SEC	SECTION
SIG	SIGNAL
SL	STREET LIGHT
SLY	SOUTHERLY
SP	SOUTHERN PACIFIC
SQ FT	SQUARE FEET
SQ YD	SQUARE YARDS
SS	SANITARY SEWER
STA	STATION
ST. D.	STREET DRAIN
STD	STANDARD
S & T	SPIKE AND TIN
STR GRD	STRAIGHT GRADE
SW	SIDEWALK
T	TANGENT, THICKNESS, TOWNSHIP OR TELEPHONE
TBM	TEMPORARY BENCH MARK
TC	TOP OF CURB
TCE	TEMPORARY CONSTRUCTION EASEMENT
TR	TRACT
TRANS	TRANSITION
T.W.	TOP OF WALL
TS	TRANSITION STRUCTURE
TYP	TYPICAL
UP	UNION PACIFIC
USC & GS	UNITED STATES COAST AND GEODETIC SURVEY
USGS	UNITED STATES GEOLOGICAL SURVEY
V	VELOCITY OF FLOW OR DEPTH OF CATCH BASIN
VABM	VERTICAL ANGLE BENCH MARK
VAR	VARIABLE
VC	VERTICAL CURVE
VCP	VITRIFIED CLAY PIPE
VERT	VERTICAL
VPI	VERTICAL POINT OF INTERSECTION
W	WEST, WIDTH OR WATER
WLY	WESTERLY
WS	WATER SURFACE

SYMBOLS

ASPHALT BERM
BARRICADE
BILLBOARD
BLOCK WALL
BUSHES
CATCH BASIN, EXISTING
CATCH BASIN, PROPOSED
CENTERLINE
CONTOURS
CONTROL POINT
CULVERT
CURB & GUTTER
DELINEATORS
DRIVEWAY, DIRT
EASEMENT, TEMPORARY CONSTRUCTION
EASEMENT, UTILITY
ELECTRICAL LINE
ELECTROLIER(S) ON POLE
ELECTROLIER ON POLE, CANTILEVER ARM
ELECTROLIER ON POWER POLE, CANTILEVER ARM
FENCE, CHAIN LINK, EXISTING
FENCE, CHAIN LINK, PROPOSED
FENCE, DOUBLE GATE
FENCE, WIRE
FENCE, WOODEN
FIELD LIGHTS
FIRE ALARM CONDUIT
FIRE HYDRANT
FLOW LINE
GAS LINE, ID IN INCHES
GUARD RAIL
HEDGE
IRRIGATION LINE, ID IN INCHES
JUNCTION STRUCTURE NO. 1 OR 2
MAIL BOX
MANHOLE COVER, EXISTING
MANHOLE COVER, PROPOSED
METER, WATER OR GAS
NORTH ARROW
OIL LINE, ID IN INCHES
PAVEMENT, EDGE OF
PIPELINE ON SURFACE
POLE, GUY WITH ANCHOR
POLE, POWER OR TELEPHONE
RAILROAD SIGNAL LINE
RAILROAD TRACKS
RETAINING WALL
RIGHT OF WAY, FLOOD CONTROL
RIGHT OF WAY, STREET
ROAD, SECONDARY
SANITARY SEWER, ID IN INCHES
SIGN, STREET
SOIL BORINGS
SPRINKLERS
STORM DRAIN, EXISTING, ID IN INCHES
STORM DRAIN, PROPOSED MAINLINE PIPE
STORM DRAIN, PROPOSED CONNECTOR PIPE
STREET LIGHT CONDUIT
TELEPHONE CABLE
TELEPHONE, MULTIPLE TILE DUCT
TELEPHONE, MULTIPLE CEMENT DUCT
TRAFFIC BARS, RAISED
TRAFFIC DETECTOR LOOP
TRAFFIC DETECTOR PAD
TRAFFIC SIGNAL LINE
TRAFFIC SIGNAL, VEHICULAR
TRAFFIC SIGNAL, PEDESTRIAN
TREE, OTHER THAN PALM
TREE, PALM
VALVE, WATER OR GAS
WATER LINE, ID IN INCHES

MODIFIED

D-304

REVISIONS			
REF	DESCRIPTION	APPR	DATE

RIVERSIDE COUNTY FLOOD CONTROL AND WATER CONSERVATION DISTRICT

DESIGNED BY:
DRAWN BY:
DATE DRAWN:
CHECKED BY:
APPROVED BY: John K. Bryant, CHIEF ENGINEER R.E. NO. 8872
DATE: 3-11-75

ABBREVIATIONS AND SYMBOLS

STANDARD DRAWING NUMBER 1004

PROJECT NO. 1-0-020
DRAWING NO. 1-294
SHEET NO. 1A OF 57