RIVERSIDE CALIFORNIA

CITY OF RIVERSIDE — INCORPORATED 1883

PUBLIC WORKS DEPARTMENT

MAGNOLIA AVENUE STORM DRAIN

EVANS PARK CHANNEL TO RAMONA DRIVE

CONSTRUCTION LEGEND

CENTER LINE — ℄ —
RIGHT-OF-WAY — R/W —
SUBDIVISION LOT LINE — PL —
TOP OF SLOPE
TOE OF SLOPE
DIRECTION OF FLOW

SPECIFIC CONSTRUCTION NOTES

NUMBERS ABOVE 100, IN A HEXAGON (ON THE PLAN), REFER TO THE RESPECTIVE STANDARD DRAWING AND SHALL BE CONSTRUCTED ACCORDINGLY. UNLESS MODIFICATIONS ARE NOTED ON THE PLAN OR COVER SHEET. ANY NUMBER SHOWN BELOW THE STANDARD DRAWING NUMBER INDICATES THE SPECIFIC ALTERNATE TO BE CONSTRUCTED.

1. CONSTRUCT MODIFIED JUNCTION STRUCTURE NO. 1 PER R.C.F.C. STD. DWG. NO. JS 226 (DATED MAY 1971), A=45', B=42", C=13', ELEV. R=784.37, ELEV. S=784.34.
2. REPLACE ALL EXISTING TRAFFIC DETECTOR LOOPS AFFECTED BY CONSTRUCTION..
4. REMOVE PORTION OF EX. METAL RAIL INTERFERRING WITH PROPOSED CONSTRUCTION.
5. RECONSTRUCT EX. AC ACCESS ROAD FROM STA. 4+77 SD TO 6+00 SD WITH 3" DGAC OVER COMPACTED SOIL.
6. CONSTRUCT PCC DRAINAGE GUTTER USING 520-C-2500 CONCRETE.
7. REMOVE EX. DRAINAGE FACILITIES. SALVAGE GRATES ON RCC DRAIN BOXES. DELIVER ONE GRATE TO RCC FACILITIES YARD AND REUSE OTHER FOR CONSTRUCTING A MODIFIED CITY OF RIVERSIDE STD. 425.
8. CONSTRUCT JUNCTION STRUCTURE "C" PER CITY OF RIVERSIDE STD. DWG. 422 A=45', B=18", C'=5.5', D1 & D2=42", E'=5.5', L'=6.5', R=833.35, S=832.29.
9. CONSTRUCT JUNCTION STRUCTURE "C" PER CITY OF RIVERSIDE STD. DWG. 422 A=60', B=18", C'=5.1', D1 & D2=42", E'=5.1', L'=6.1', R=832.23, S=831.75.
10. REMOVE DRAINAGE STRUCTURE. PLUG EXPOSED PIPE ENDS WITH PCC SLURRY. BACKFILL VOID AND RESURFACE WHERE APPLICABLE.
11. REPLACE SPORT TRACK SURFACE, WHERE DISTURBED BY CONSTRUCTION, TO FULL WIDTH, WITH A 2" DEPTH OF DISINTEGRATED GRANITE AT A MAXIMUM GRADATION OF 1/2".
12. PROTECT EX. 3' WIDE PCC SWALE IN PLACE FROM STA. 3+10 SD TO 4+60 SD.
13. INSTALL BLUE PAVEMENT MARKER.
14. RELOCATE EXISTING ELC BEHIND CATCH BASIN AND REMOVE INTERFERRING PORTIONS OF ABANDONED ELC LINE.

MH 256 / MH 258 — COUNTY OF RIVERSIDE FLOOD CONTROL AND WATER CONSERVATION DISTRICT STD. DETAILS (DATED MAY 1971).

408 M — CONSTRUCT MODIFIED CITY OF RIVERSIDE STD. 408 AS SHOWN ON SHEET 4 OF 4, LATERAL "B" PROFILE, TO AVOID CONFLICT WITH ELECTRIC UTILITY CONDUIT. D=3.8', L=8', V=6.25', W=8'

425 M — CONSTRUCT MODIFIED CITY OF RIVERSIDE STD. 425 (W=4', L=4.1') AS SHOWN ON SHEET 4 OF 4, LATERAL "A" PROFILE. SIZE OF STRUCTURE IS INCREASED TO ACCOMMODATE THE RE-USE OF A SALVAGED INLET FRAME AND GRATE (4'X4', STA. 2+98.50 SD, 11.52'RT.) IN LIEU OF USING THE STD. FOUNDARY FRAME AND COVER. NO CHANNELIZED INVERT IS REQUIRED.

PIP — PROTECT IN PLACE.

SL 1 — INSTALL PULL BOX (10" X 7" X 12") PER ITEM P-1 OF UGS-800 AND UGS-320. INTERCEPT AND EXTEND EX. 1" CONDUIT USING 2#8 CU. 600V CABLES, AS REQUIRED IN THE FIELD.

GENERAL CONSTRUCTION NOTES

1. CONSTRUCTION SHALL BE IN ACCORDANCE WITH THE CITY OF RIVERSIDE STANDARD DRAWINGS AND STANDARD SPECIFICATIONS FOR PUBLIC WORKS CONSTRUCTION, 1991 EDITION.
2. EXISTING UTILITIES, SHOWN ON THIS PLAN, ARE PLOTTED FROM UTILITY RECORDS. THE CONTRACTOR IS REQUIRED TO TAKE DUE PRECAUTIONARY MEASURES TO LOCATE AND PROTECT ALL UTILITIES WHETHER OR NOT SHOWN ON THIS PLAN. IF THE COVER OF A UTILITY IS KNOWN, IT IS SHOWN IN THE PROFILE. UTILITIES SHOWN AS , IN THE PROFILE, INDICATE THAT THE COVER IS UNKNOWN; BUT, THE UTILITY IS NOT EXPECTED TO CONFLICT WITH THE PROPOSED IMPROVEMENTS.
3. UTILITIES, SHOWN IN CONFLICT WITH THE PROPOSED STORM DRAIN FACILITIES, SHALL BE RELOCATED PRIOR TO CONSTRUCTION BY OTHERS.
4. ALL ELEVATIONS, SHOWN ON THE PLANS, SHALL BE STAKED IN THE FIELD.
5. PRIOR TO ISSUANCE OF GRADE SHEETS ALL POTENTIALLY CONFLICTING UTILITIES SHALL BE EXPOSED AND SURVEYED FOR PRECISE LOCATION. EVANS PARK CHANNEL INVERT, 27" & 12" SEWER CROSSINGS, MUST BE EXPOSED, FOR PRECISE SURVEY, PRIOR TO ISSUING INITIAL GRADE SHEETS.
6. PRIME CONTRACTORS, BIDDING THIS WORK, SHALL HAVE A CLASS A, C-34 OR C42 LICENSE.
7. CURB AND GUTTER SHALL BE STAKED WITH 3' OFFSETS AT 12.5' INTERVALS AND TWO ROWS OF #3 REBAR SHALL BE PLACED IN THE GUTTER WHERE GRADE IS LESS THAN 0.35%. PLACE 3/4" DOWEL PINS AT ALL EXPANSION JOINTS.
8. CONTRACTOR SHALL RELOCATE ALL TRAFFIC SIGNS, REMOVED DUE TO CONSTRUCTION, PER CITY STANDARDS.
9. CONSTRUCT THE CURVED SECTIONS OF THE STORM DRAIN LINE BY USING BEVELED END STORM DRAIN (RCP) PIPE.

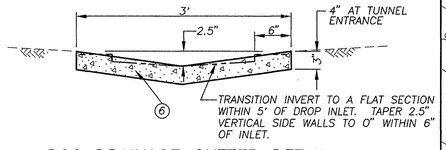

PCC DRAINAGE GUTTER DETAIL
STA. 0+15± SD RT. TO 3+10± SD RT.
SCALE: 1"=1'

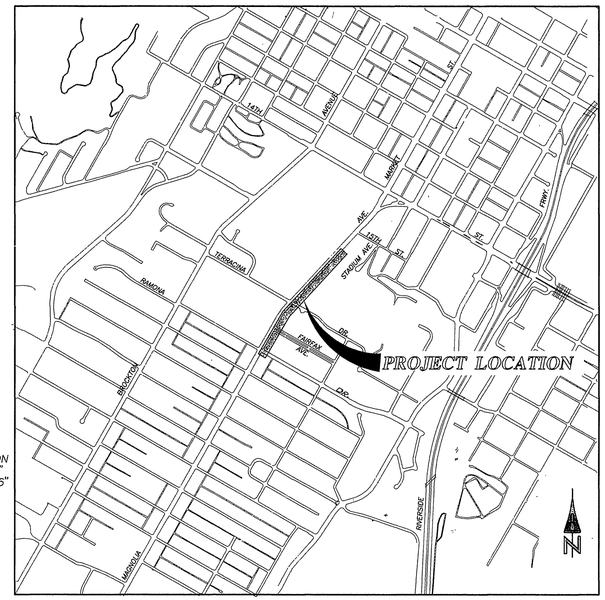

PROJECT LOCATION PLAN
0 KM. 0.5 KM. 1 KM. 1.5 KM.
0' 500' 1000' 2000' 3000' 4000' 5000' 6000'
SCALE:1"=1000'

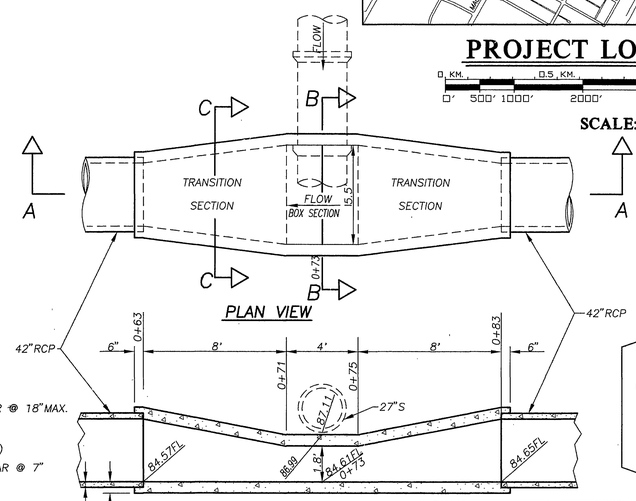

PLAN VIEW

SECTION A-A
SCALE : 1"=4'

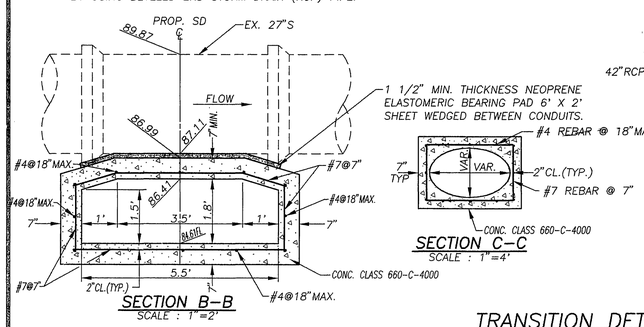

SECTION B-B
SCALE : 1"=2'

SECTION C-C
SCALE : 1"=4'

TRANSITION DETAIL
STA. 0+66 SD TO 0+80 SD

IMPORTANT NOTICE

Section 4216/4217 of the Government Code requires a Dig Alert Identification Number to be issued before a "Permit to Excavate" will be valid. For your Dig Alert I.D. Number call Underground Service Alert TOLL FREE 1-800-422-4133 Two working days before you dig.

EXISTING UNDERGROUND & TOPOGRAPHY LEGEND

EXISTING UNDERGROUND UTILITIES:

SANITARY SEWER — 8"S
WATER LINE — 6"W
STORM DRAIN — 24"SD
GAS LINE — 3"G
ABANDONDED UTILITY — 6"G(ABAN'D.)
TELEPHONE CONDUIT — T
ELECTRICAL CONDUIT — E
ELECTROLIER LIGHTING CONDUIT — ELC
TRAFFIC SIGNAL — SIG
FIRE ALARM — F

EXISTING TOPOGRAPHY:

BLOCK WALL
BOARD FENCE
WIRE FENCE
CHAIN LINK FENCE
TOP OF SLOPE
TOE OF SLOPE
DIRECTION OF FLOW

SANITARY SEWER M.H.
SANITARY SEWER CLEANOUT
STORM DRAIN M.H.
IRRIGATION WEIR
WATER M.H.
GAS M.H.
ELECTRIC M.H.
TELEPHONE M.H.
WATER METER
FIRE HYDRANT
SPRINKLER HEAD
VALVE
AIR VALVE
AIR VENT
BUS STOP SIGN
BLOW-OFF VALVE
IRRIGATION STAND PIPE
POLE & GUY ANCHOR
POWER POLE
TELEPHONE POLE
TELEPHONE RISER
JOINT USE POLE
PULL BOX
TRAFFIC SIGN
PARKING METER
FIRE ALARM BOX
STREET NAME SIGN
GAS METER
MAIL BOX
FAUCET
WALK-DON'T WALK PEDESTRIAN SIGNAL
ELECTROLYSIS TEST STATION
PEDESTRIAN PUSH BUTTON
RAILROAD TRACKS
RAILROAD SIGN
RAILROAD SIGNAL
TRAFFIC SIGNAL
TRAFFIC SIGNAL ON MAST ARM
TRAFFIC SIGNAL CONTROLLER
TRAFFIC SIGNAL PRESSURE DETECTOR
TRAFFIC SIGNAL LOOP DETECTOR
STREET LIGHT & TRAFFIC SIGNAL ON MAST ARM
STREET LIGHT (UPRIGHT)
STREET LIGHT ON MAST ARM
STEEL POST
WOOD POST
CONCRETE
ASPHALT
BUILDING
EDGE OF PAVEMENT
WHEEL STOP
A.C. BERM

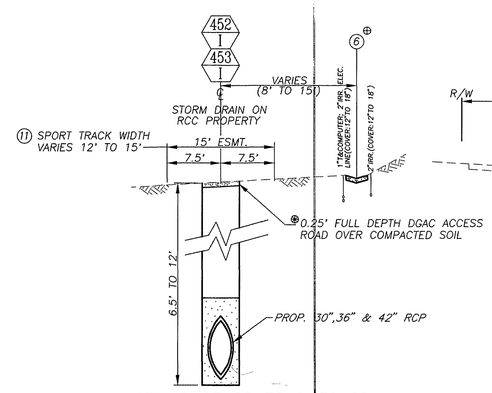

STA. 0+07 SD TO 6+50 SD
⊕4+80 SD TO 6+00 SD
⊕0+05.5 SD TO 3+10 SD

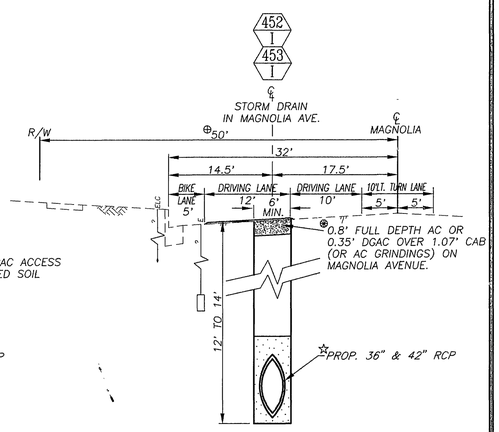

STA. 7+60 SD TO 20+54 SD
⊕100' STA. 7+60 SD TO 10+60 SD
⊕STA. 7+35 SD TO 20+54 SD
☆36" R.C.P. STA. 7+61 TO 10+80.

TYPICAL SECTION
SCALE : HOR. 1"=10', VERT. 1"=4'

*AS BUILT CD 3/3/98

ENGINEER IN RESPONSIBLE CHARGE
Ronald C. Mueller
RONALD C. MUELLER
R.C.E. No. 29510 expires 3/31/95
DATE 4/7/94

REGISTERED PROFESSIONAL ENGINEER RONALD C. MUELLER NO. 29510 Expires: 3/31/95 CIVIL STATE OF CALIFORNIA

MARK	REVISIONS	APPR	DATE

DESIGNED BY FYL DRAWN BY RJM CHECKED BY RCM

CITY OF RIVERSIDE, CALIFORNIA
PUBLIC WORKS DEPARTMENT

APPROVED BY	BY	DATE
DEPUTY P.W. DIRECTOR	RJM	5/17/94
PRINCIPAL ENGINEER		4/7/94
CHIEF P.W. INSPECTOR		
TRAFFIC DIVISION		4/6/94
SURVEYOR	JWS	4/6/94
STREET SERVICES		4/7/94

APPROVED BY
PUBLIC WORKS DIRECTOR
DATE 5/2/94

MAGNOLIA AVENUE STORM DRAIN
EVANS PARK CHANNEL TO RAMONA DR.

ACCT. NO. 410-541400-440301-20047

D-359

SHEET 1 OF 4

FILE NO.

INDEXED 11-14-94 GH

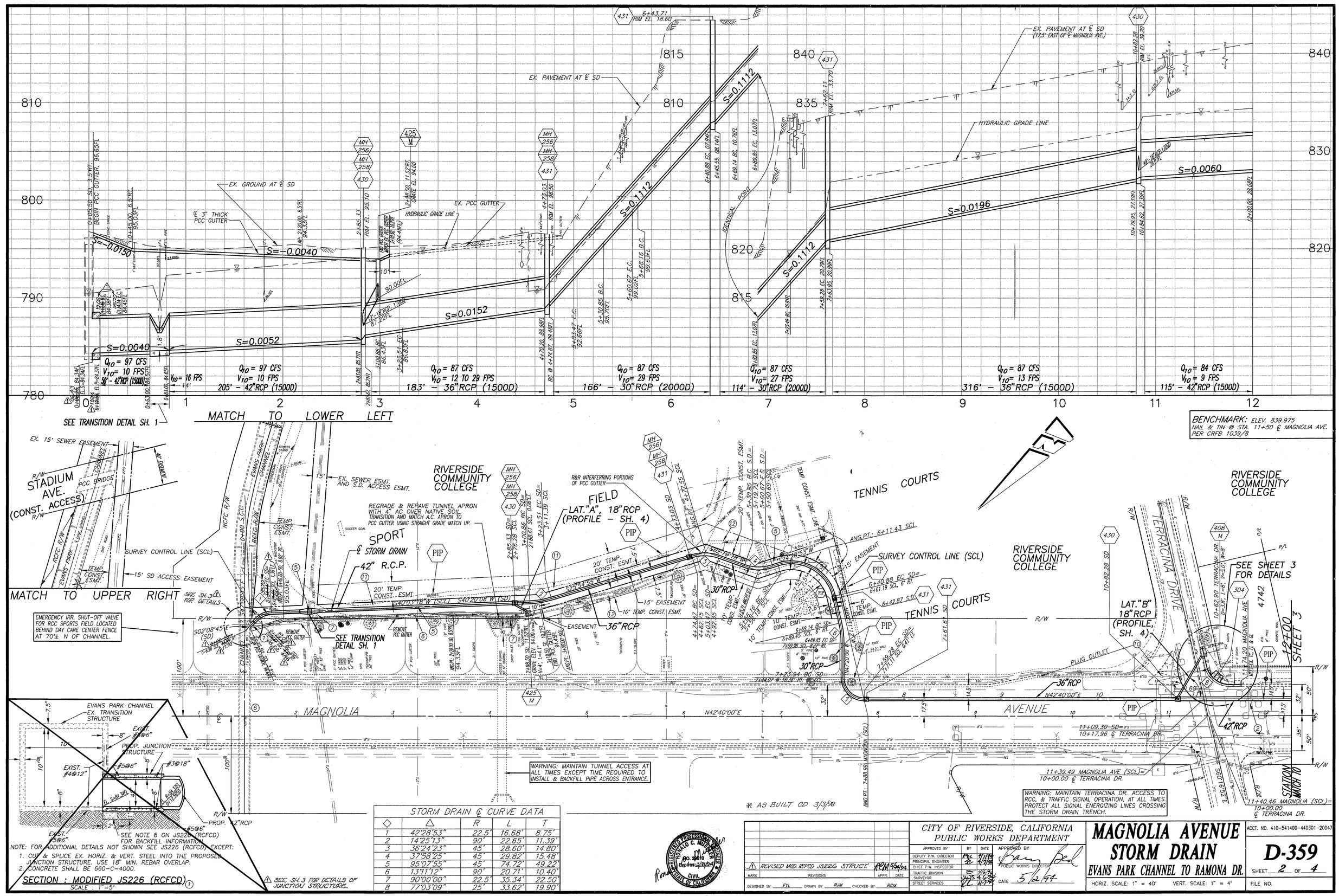

BENCHMARK: ELEV. 839.975
NAIL & TIN @ STA. 11+50 ℄ MAGNOLIA AVE.
PER CRFB 1039/8

STORM DRAIN ℄ CURVE DATA				
◇	△	R	L	T
1	42°28'53"	22.5'	16.68'	8.75'
2	14°25'13"	90'	22.65'	11.39'
3	36°24'23"	45'	28.60'	14.80'
4	37°58'25"	45'	29.82'	15.48'
5	95°07'55"	45'	74.72'	49.22'
6	13°11'12"	90'	20.71'	10.40'
7	90°00'00"	22.5'	35.34'	22.50'
8	77°03'09"	25'	33.62'	19.90'

REGISTERED PROFESSIONAL ENGINEER RONALD C. MOSER No. 20010 Expires: 3/31/94 CIVIL STATE OF CALIFORNIA

MARK	REVISIONS	APPR.	DATE
1	REVISED MOD. RCFCD JS226 STRUCT.	RCM	5/24/94

DESIGNED BY FYL DRAWN BY RJM CHECKED BY RCM

CITY OF RIVERSIDE, CALIFORNIA
PUBLIC WORKS DEPARTMENT

APPROVED BY	BY	DATE
DEPUTY P.W. DIRECTOR		4/11/94
PRINCIPAL ENGINEER		4/7/94
CHIEF P.W. INSPECTOR		
TRAFFIC DIVISION		4/6/94
SURVEYOR		4-6-94
STREET SERVICES		4-7-94

APPROVED BY: Barry Bell
PUBLIC WORKS DIRECTOR
DATE 5/2/94

MAGNOLIA AVENUE STORM DRAIN
EVANS PARK CHANNEL TO RAMONA DR.

HORIZ. SCALE: 1" = 40' VERT. SCALE: 1" = 4'

ACCT. NO. 410-541400-440301-20047

D-359

SHEET 2 OF 4

FILE NO.

INDEXED 11-14-94 GH

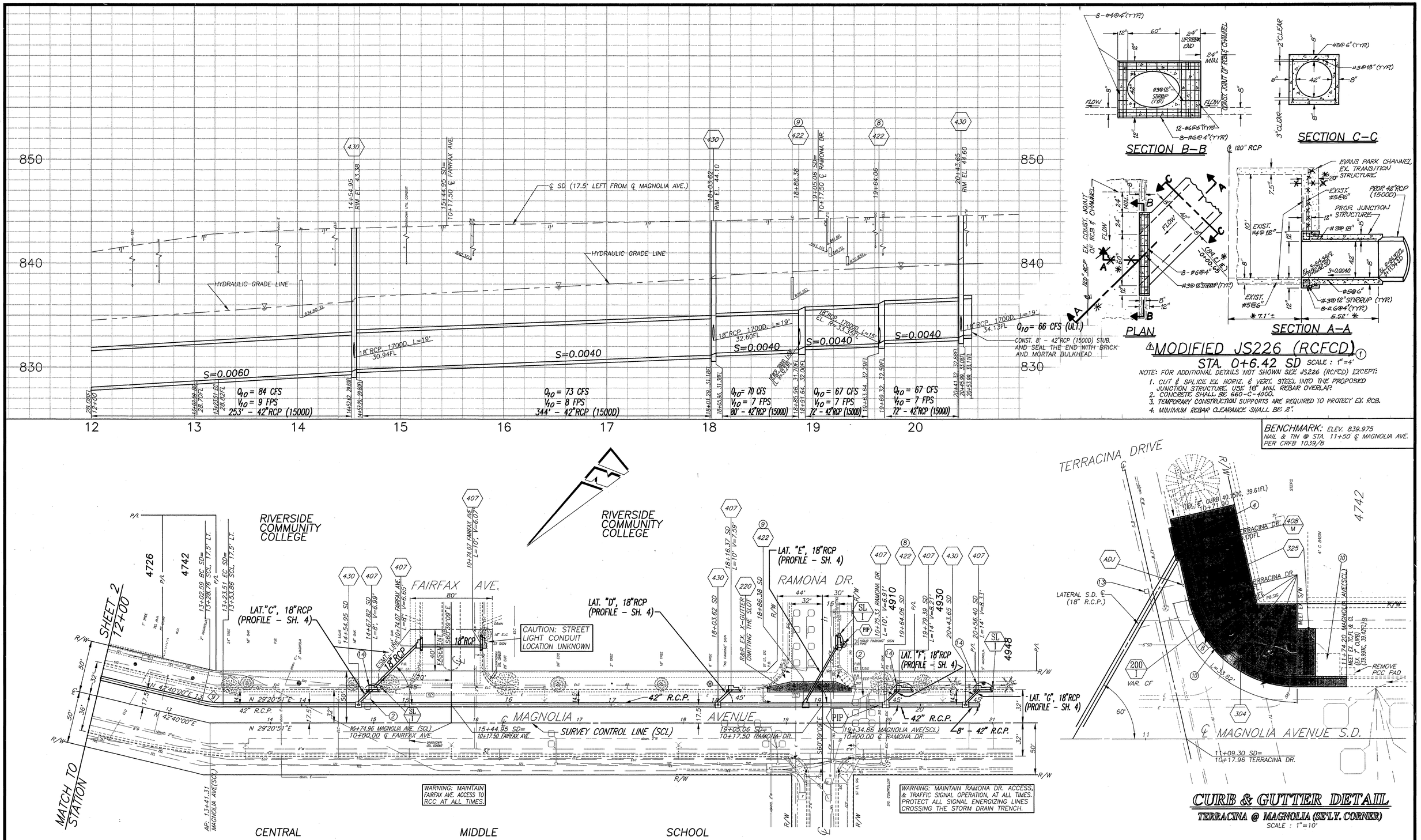

STORM DRAIN ℄ CURVE DATA				
◇	△	R	L	T
9	13°19'09"	90.00'	20.92'	10.51'

MARK	REVISIONS	APPR.	DATE
1	REVISED MOD. RCFCD JS226 STRUC.	RCM	5/24/94

DESIGNED BY FYL DRAWN BY CURT, RJM CHECKED BY RCM

CITY OF RIVERSIDE, CALIFORNIA
PUBLIC WORKS DEPARTMENT

APPROVED BY	BY	DATE
DEPUTY P.W. DIRECTOR		4/7/94
PRINCIPAL ENGINEER		4/7/94
CHIEF P.W. INSPECTOR		
TRAFFIC DIVISION		4/6/94
SURVEYOR		4/6/94
STREET SERVICES		4/7/94

APPROVED BY: PUBLIC WORKS DIRECTOR
DATE 5/2/94

MAGNOLIA AVENUE STORM DRAIN
EVANS PARK CHANNEL TO RAMONA DR.

HORIZ. SCALE: 1" = 40' VERT. SCALE: 1" = 4'

ACCT. NO. 410-541400-440301-20047

D-359

SHEET 3 OF 4

FILE NO.

INDEXED 11-14-94 GH

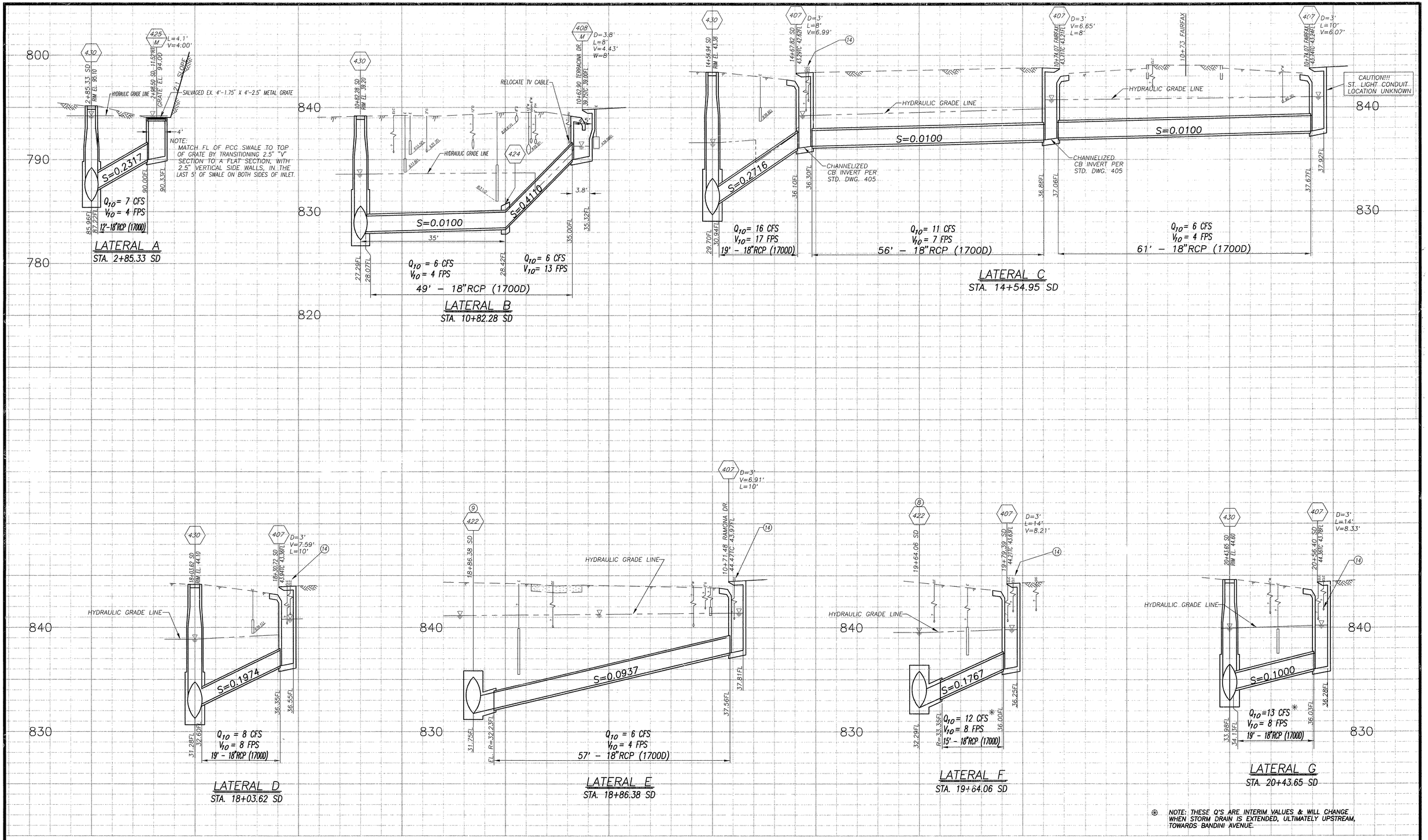

* NOTE: THESE Q'S ARE INTERIM VALUES & WILL CHANGE WHEN STORM DRAIN IS EXTENDED, ULTIMATELY UPSTREAM, TOWARDS BANDINI AVENUE.

*AS BUILT CD 3/3/98

MARK	REVISIONS	APPR.	DATE

DESIGNED BY FYL DRAWN BY RJM CHECKED BY RCM

CITY OF RIVERSIDE, CALIFORNIA
PUBLIC WORKS DEPARTMENT

APPROVED BY	BY	DATE
DEPUTY P.W. DIRECTOR	RMG	4/7/94
PRINCIPAL ENGINEER	RC	4/7/94
CHIEF P.W. INSPECTOR		
TRAFFIC DIVISION		
SURVEYOR		
STREET SERVICES		
PARKS DEPARTMENT		

APPROVED BY
PUBLIC WORKS DIRECTOR
DATE 3/2/94

MAGNOLIA AVENUE STORM DRAIN
EVANS PARK CHANNEL TO RAMONA DR.

HORIZ. SCALE: 1" = 10' VERT. SCALE: 1" = 4'

ACCT. NO. 410-541400-440301-20047

D-359

SHEET 4 OF 4

FILE NO.

INDEXED 11-14-94 GH