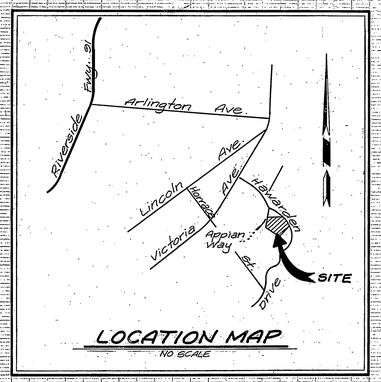

LOCATION MAP
NO SCALE

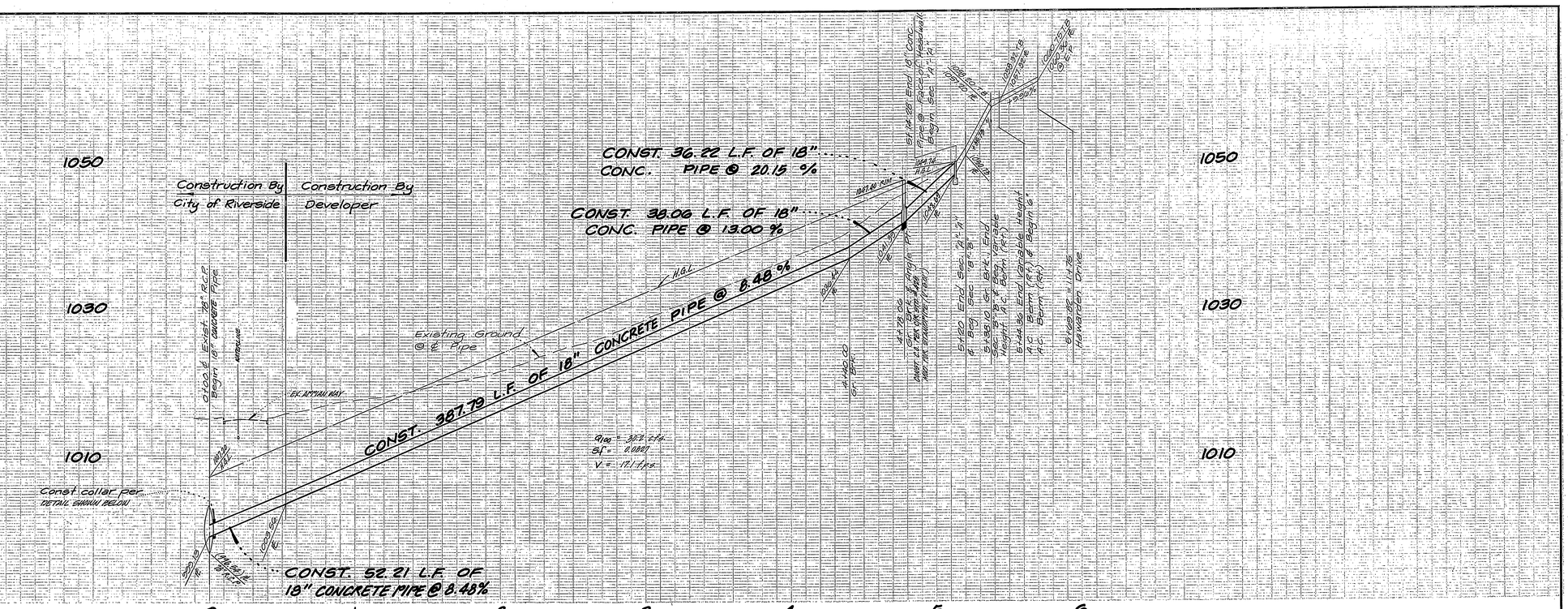

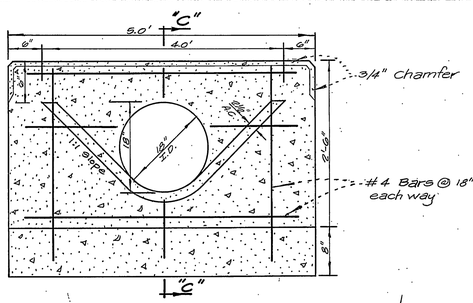

SECTION "A"-"A"
EAST FACE OF HEADWALL
NO SCALE

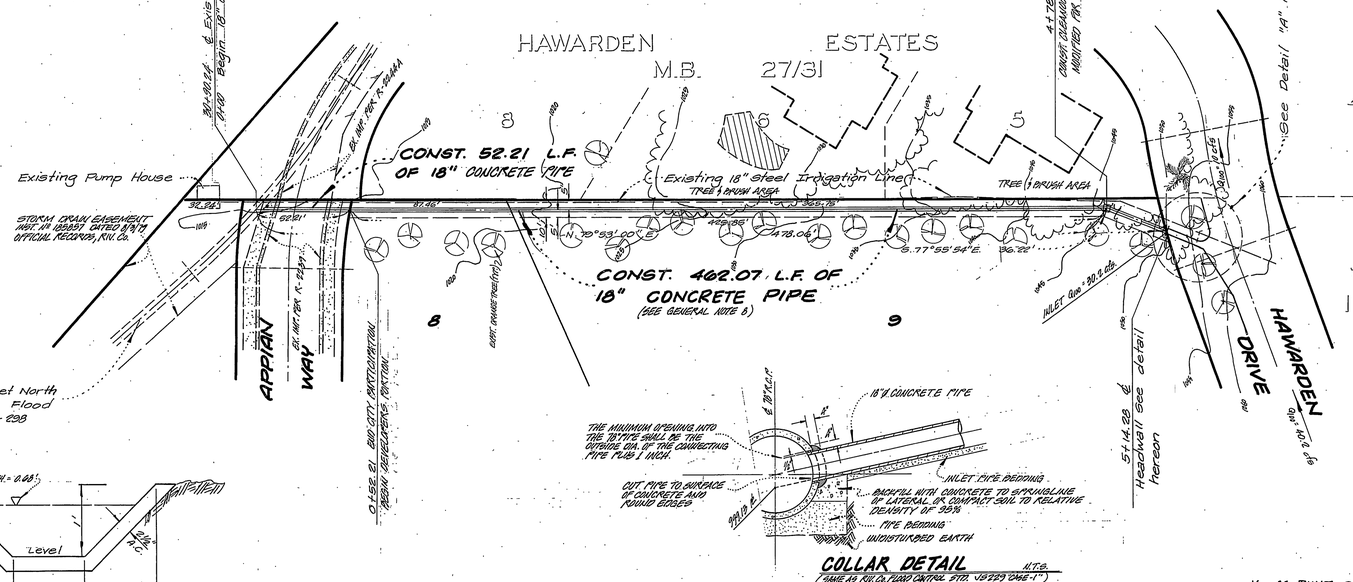

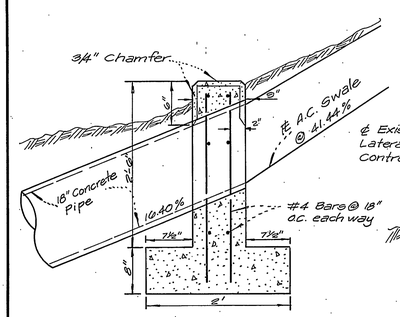

SECTION "C"-"C"
NO SCALE

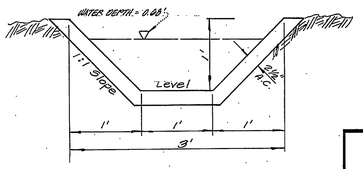

SECTION "B"-"B"
A.C. SWALE
NO SCALE

COLLAR DETAIL
(SAME AS RIV. CO. FLOOD CONTROL STD. No 229 "CASE-1")

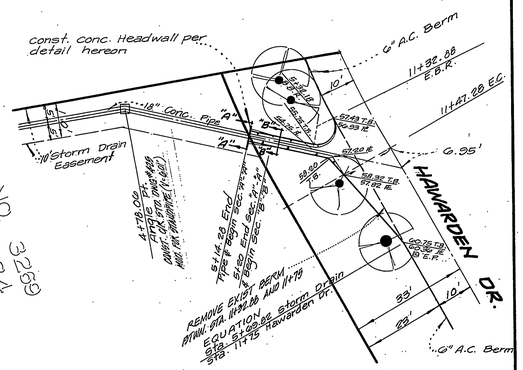

DETAIL "A"
SCALE: 1"=20'

GENERAL NOTES

1. It shall be the responsibility of the Contractor to protect the exist. irrigation line.
2. Pipe bedding shall be per City of Riverside Std. Dwg. no. 452, Case I.
3. The private engineer signing these plans is responsible for the accuracy and acceptability of the work hereon. In the event of discrepancies arising during construction, the private engineer shall be responsible for determining an acceptable solution and revising the plans for approval by the City.
4. All flagged elevations to be staked in the field by the PRIVATE ENGINEER.
5. DEVELOPER AND/OR CONTRACTOR TO GIVE R.C.F.C. 5 DAYS WRITTEN NOTICE PRIOR TO STARTING WORK ON STORM DRAIN (OR DOING ANY WORK WITHIN R.C.F.C. EASEMENTS) R.C.F.C. ENCROACHMENT PERMIT No 1-0-182-190
6. CONSTRUCTION SHALL BE IN ACCORDANCE WITH THE CITY OF RIVERSIDE DEPARTMENT OF PUBLIC WORKS STANDARD DRAWINGS AND THE STANDARD SPECIFICATIONS FOR PUBLIC WORKS CONSTRUCTION, 1982 EDITION.
7. THE DEVELOPER AND/OR CONTRACTOR SHALL CONTACT THE PUBLIC WORKS DEPARTMENT 30 DAYS PRIOR TO BEGINNING CONSTRUCTION TO NEGOTIATE THE COST OF THE CITY'S PORTION OF THE WORK.
8. THE 18"ø CONCRETE PIPE SHALL BE PER A.S.T.M. C14, CLASS 1.

* AS BUILT 3-16-84 [illegible]

L A WAINSCOTT & ASSOCIATES
CIVIL ENGINEERS
GRAND TERRACE, CALIFORNIA
(714) 824-1775

APPROVED BY L. A. Wainscott DATE 6-21-82
R.C.E. 16056

W.O. 021.05 FOR Concordia Development F.B.

MARK	REVISIONS	APPR.	DATE

DESIGNED BY P.H. DRAWN BY P.J. CHECKED BY [illegible]

BENCH MARK: ELEVATION = 960.885
CITY OF RIVERSIDE B.M. G6-6, F.B. 890/60, P.K. NAIL & TAG IN CULVERT HEADWALL & WESTERLY CORNER OF VICTORIA AVE. AND ANNA ST.

CITY OF RIVERSIDE, CALIFORNIA
DEPARTMENT OF PUBLIC WORKS

APPROVED BY	BY	DATE
OFFICE ENGINEER		
PARK DEPARTMENT		
TRAFFIC DIVISION		
ASSISTANT CITY ENG.		9-23

APPROVED BY: [signature] DIRECTOR OF PUBLIC WORKS
DATE 9/23/82

STORM DRAIN PLAN AND PROFILE

TRACT NO. 10772

SCALE: HORIZ. 1"=40' VERT. 1"=8'

D-423
SHT. 1 OF 1
W.O. 021.05-D

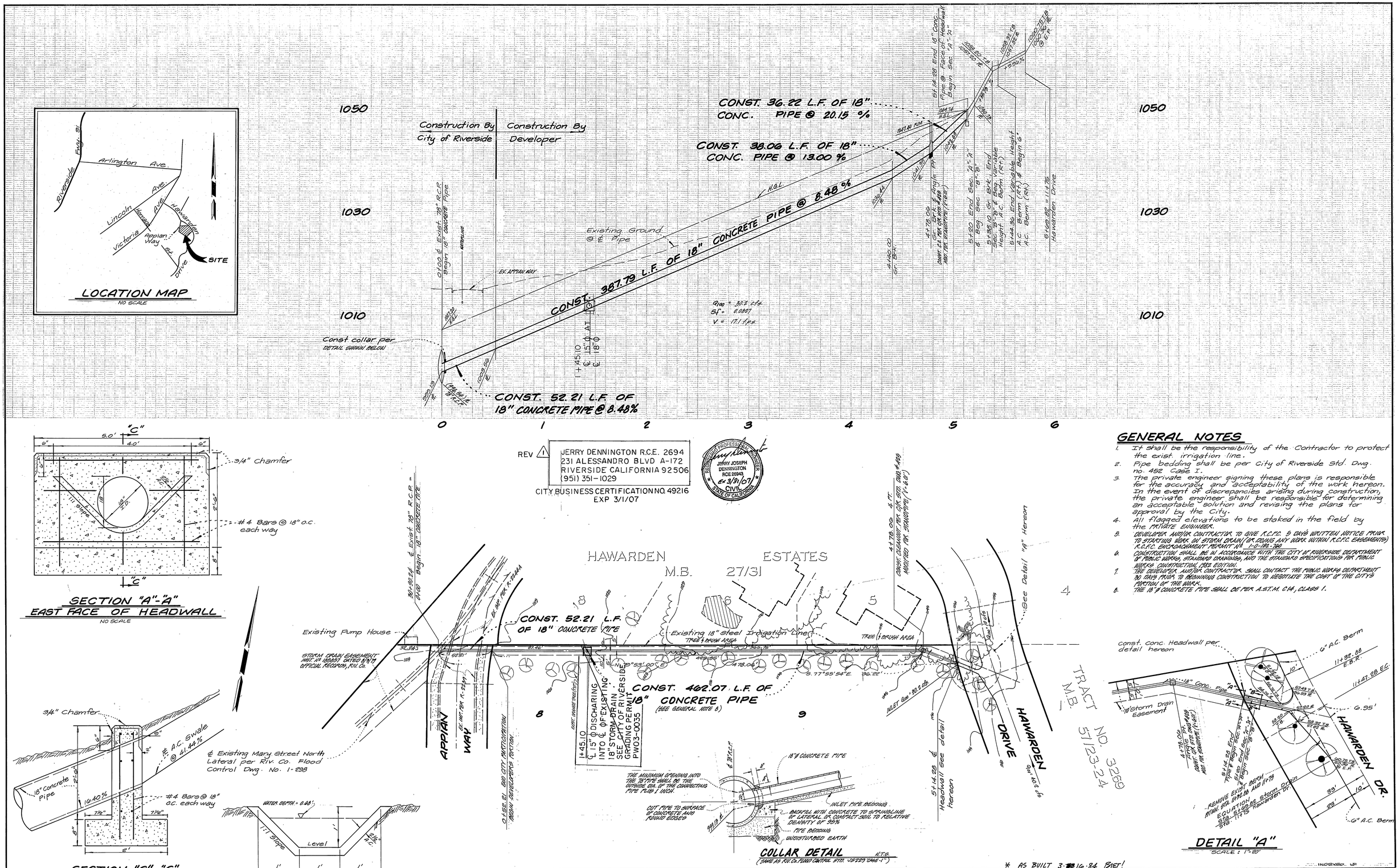

REV 1

JERRY DENNINGTON R.C.E. 2694
231 ALESSANDRO BLVD A-172
RIVERSIDE CALIFORNIA 92506
(951) 351-1029

CITY BUSINESS CERTIFICATION NO. 49216
EXP 3/1/07

REGISTERED PROFESSIONAL ENGINEER
JERRY JOSEPH DENNINGTON
RCE 26943
EX 3/31/07
CIVIL
STATE OF CALIFORNIA

GENERAL NOTES

1. It shall be the responsibility of the Contractor to protect the exist. irrigation line.
2. Pipe bedding shall be per city of Riverside Std. Dwg. no. 452 Case 1.
3. The private engineer signing these plans is responsible for the accuracy and acceptability of the work hereon. In the event of discrepancies arising during construction, the private engineer shall be responsible for determining an acceptable solution and revising the plans for approval by the City.
4. All flagged elevations to be staked in the field by the PRIVATE ENGINEER.
5. DEVELOPER AND/OR CONTRACTOR TO GIVE R.C.F.C. & DAYS WRITTEN NOTICE PRIOR TO STARTING WORK ON STORM DRAIN/OR DOING ANY WORK WITHIN R.C.F.C. EASEMENTS) R.C.F.C. ENCROACHMENT PERMIT No 1-0-192-700
6. CONSTRUCTION SHALL BE IN ACCORDANCE WITH THE CITY OF RIVERSIDE DEPARTMENT OF PUBLIC WORKS STANDARD DRAWINGS, AND THE STANDARD SPECIFICATIONS FOR PUBLIC WORKS CONSTRUCTION, 1982 EDITION.
7. THE DEVELOPER AND/OR CONTRACTOR SHALL CONTACT THE PUBLIC WORKS DEPARTMENT 30 DAYS PRIOR TO BEGINNING CONSTRUCTION TO NEGOTIATE THE COST OF THE CITY'S PORTION OF THE WORK.
8. THE 18"ø CONCRETE PIPE SHALL BE PER A.S.T.M. C14, CLASS 1.

L A WAINSCOTT & ASSOCIATES
CIVIL ENGINEERS
GRAND TERRACE, CALIFORNIA
(714) 824-1775

APPROVED BY L.A. Wainscott DATE 6-21-82
R.C.E. 16086

W.O. 021.05 FOR Concordia Development F.B.

MARK	REVISIONS	APPR.	DATE
1	STD 421 JUNCTION STURCTURE PER CITY	RPZ	3-8-06

DESIGNED BY P.H. DRAWN BY P.J. CHECKED BY

BENCH MARK: ELEVATION = 900.865
CITY OF RIVERSIDE B.M. 66-A, F.B. 898/90, P.K. NAIL & TAG IN CULVERT HEADWALL @ WESTERLY CORNER OF VICTORIA AVE. AND ANNA ST.

CITY OF RIVERSIDE, CALIFORNIA
DEPARTMENT OF PUBLIC WORKS

APPROVED BY	BY	DATE
OFFICE ENGINEER		
PARK DEPARTMENT		
TRAFFIC DIVISION		
ASSISTANT CITY ENG.		3-23

APPROVED BY: DIRECTOR OF PUBLIC WORKS
DATE 9/29/82

STORM DRAIN PLAN AND PROFILE

TRACT NO. 10772

D-423

SHT. 1 OF 1

SCALE: HORIZ.: 1"=40' VERT. 1"=8'

W.O. 021.05-0