RIVERSIDE CALIFORNIA

CITY OF RIVERSIDE — INCORPORATED 1883

PUBLIC WORKS DEPARTMENT

RUBIDOUX AVENUE STORM DRAIN

FROM TEQUESQUITE AVE. TO TOWER RD. & BRENTWOOD AVE.

GENERAL CONSTRUCTION NOTES

1. EXISTING UTILITIES SHOWN ON THE PLAN, ARE PLOTTED FROM UTILITY RECORDS. THE CONTRACTOR IS REQUIRED TO TAKE DUE PRECAUTIONARY MEASURES TO LOCATE AND PROTECT ALL UTILITIES WHETHER OR NOT SHOWN ON THIS PLAN.
2. PRIME CONTRACTORS BIDDING THIS WORK SHALL HAVE A CLASS "A", "C-34", OR A "C-42" LICENSE.
3. ALL ELEVATIONS SHOWN ON THE PLANS SHALL BE STAKED IN THE FIELD.
4. EXISTING PIPES AT PROPOSED MEET POINTS SHALL BE EXPOSED AND ELEVATION VERIFIED BY CITY SURVEYORS PRIOR TO THE ISSUANCE OF GRADE SHEETS.
5. CONSTRUCTION SHALL BE IN ACCORDANCE WITH THE CITY OF RIVERSIDE STANDARD DRAWINGS AND STANDARD SPECIFICATIONS FOR PUBLIC WORKS CONSTRUCTION, 1997 EDITION.
6. CONFLICTING UTILITIES IN THE CONSTRUCTION AREA SHALL BE RELOCATED OR ABANDONED.
7. LOCATION OF THE SEWER LATERALS AND WATER SERVICE LINES SHOWN ON THE PLAN ARE APPROXIMATE. THESE SHALL BE LOCATED IN THE FIELD BY THE CONTRACTOR AT THE TIME OF CONSTRUCTION.
8. UTILITIES TO BE CROSSED BY THE PROPOSED STORM DRAIN FACILITIES SHALL BE LOCATED IN THE FIELD PRIOR TO THE ISSUANCE OF GRADE SHEETS.
9. GROUND WATER DISCLAIMER NOTE: IT IS THE CONTRACTORS RESPONSIBLITY TO INVESTIGATE THE PRESENT GROUNDWATER CONDITION PRIOR TO BIDDING AND CONSTRUCTING THE PROJECT.
10. VITRIFIED CLAY PIPE JOINTS SHALL BE TYPE 'G', BELL & SPIGOT COMPRESSION JOINTS.

SPECIFIC CONSTRUCTION NOTES

1. FOR LATERAL PROFILES, SEE SHEET 10.
2. FOR OUTLET STRUCTURE DETAILS, SEE SHEET 11.

CONSTRUCTION LEGEND:

- NUMBERS ABOVE 100 IN A HEXAGON ON THE PLAN REFER TO THE RESPECTIVE STANDARD DRAWING AND SHALL BE CONSTRUCTED ACCORDINGLY, UNLESS MODIFICATIONS ARE NOTED ON THE PLAN. ANY NUMBER SHOWN BELOW THE STANDARD DRAWING NUMBER INDICATES THE SPECIFIC ALTERNATE TO BE CONSTRUCTED.
- P/P — PROTECT IN PLACE.
- ADJ. — ADJUST STORM DRAIN MANHOLE TO GRADE.
- RR S1 — REMOVE EXISTING X-GUTTER, SPANDREL & STRUCTURAL SECTION AND REPLACE WITH 0.54' AC OVER COMPACTED NATIVE SOIL.

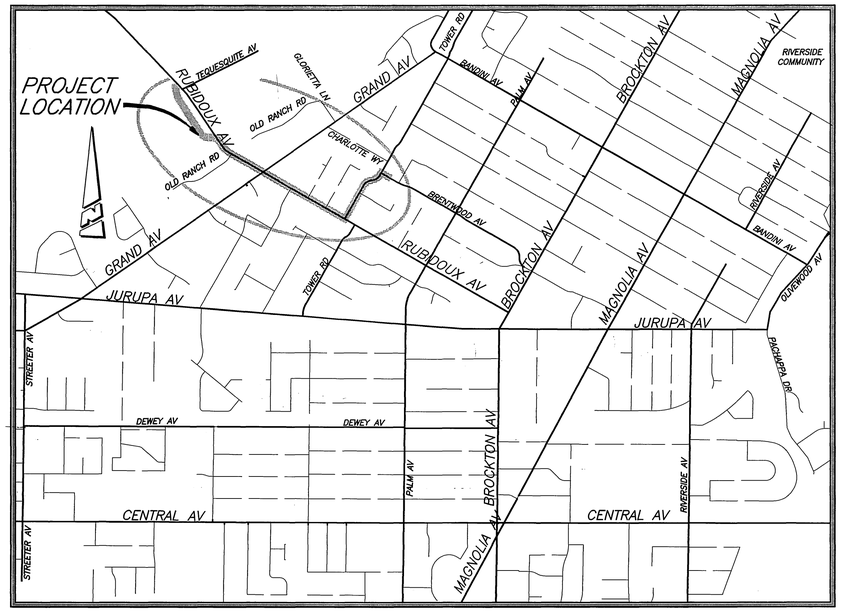

PROJECT LOCATION MAP

0 KM. 0.5 KM. 1 KM 1.5 KM.
0' 500' 1000' 2000' 3000' 4000' 5000' 6000'

SCALE: 1" = 1,000'

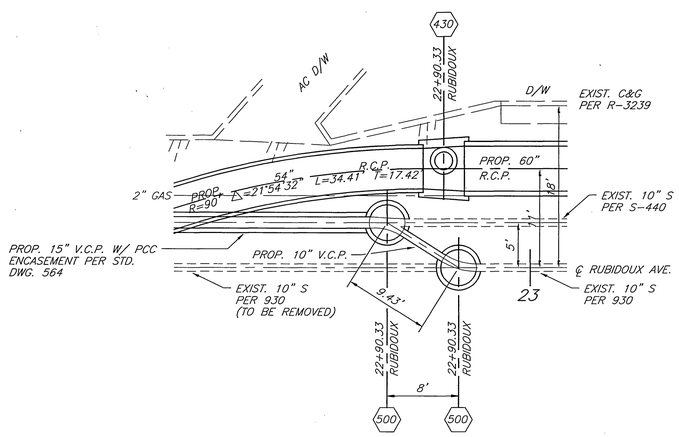

SEWER CONNECTION DETAIL

SCALE: 1" = 8'

CONNECTION OF PROP. 15" VCP TO EXIST. 10" SEWERS
(FOR PLAN & PROFILE SEE SHEET 5)

EXISTING UNDERGROUND & TOPOGRAPHY LEGEND

EXISTING UNDERGROUND UTILITIES:

SANITARY SEWER	8"S	TELEPHONE CONDUIT	T T
WATER LINE	6"W	ELECTRICAL CONDUIT	E E
STORM DRAIN	24"SD	ELECTROLIER LIGHTING CONDUIT	ELC
GAS LINE	3"G	TRAFFIC SIGNAL	SIG SIG
ABANDONDED UTILITY	6"G(ABAN'D.)	FIRE ALARM	F F

EXISTING TOPOGRAPHY:

- BLOCK WALL
- BOARD FENCE
- WIRE FENCE
- CHAIN LINK FENCE
- TOP OF SLOPE
- TOE OF SLOPE
- DIRECTION OF FLOW

- SANITARY SEWER M.H.
- SANITARY SEWER CLEANOUT
- STORM DRAIN M.H.
- IRRIGATION WEIR
- WATER M.H.
- GAS M.H.
- ELECTRIC M.H.
- TELEPHONE M.H.
- WATER METER
- FIRE HYDRANT
- SPRINKLER HEAD
- VALVE
- AIR VALVE
- POLE & GUY ANCHOR
- POWER POLE
- TELEPHONE POLE
- TELEPHONE RISER
- JOINT USE POLE
- PULL BOX
- TRAFFIC SIGN
- FIRE ALARM BOX
- STREET NAME SIGN
- GAS METER
- MAIL BOX
- FAUCET
- A.C. BERM
- STREET LIGHT (UPRIGHT)
- STREET LIGHT ON MAST ARM
- STEEL POST
- WOOD POST
- AIR VENT
- BUS STOP SIGN
- BLOW-OFF VALVE
- IRRIGATION STAND PIPE
- CONCRETE
- ASPHALT
- BUILDING
- EDGE OF PAVEMENT

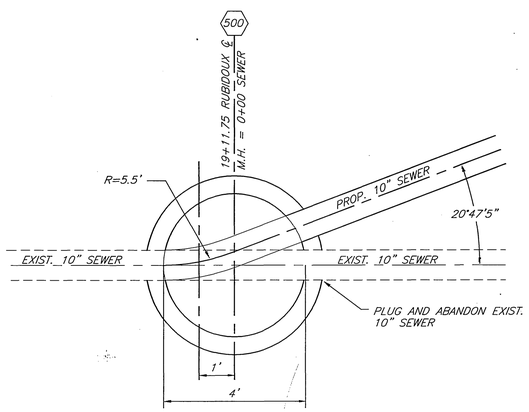

SEWER CONNECTION DETAIL

SCALE: 1" = 2'

RUBIDOUX AVE. SEWER REALIGNMENT
W'LY OF OLD RANCH ROAD
FOR PLAN AND PROFILE SEE SHEET 4

IMPORTANT NOTICE
Section 4216/4217 of the Government Code requires a Dig Alert Identification Number to be issued before a "Permit to Excavate" will be valid. For your Dig Alert I.D. Number call Underground Service Alert
TOLL FREE 1-800-227-2600
Two working days berfore you dig.

*AS-BUILT 9-03-03 GH

ENGINEER IN RESPONSIBLE CHARGE
BEN URQUIZA
R.C.E. No. 33657 expires 6/30/02
DATE JULY 12, 1999

REGISTERED PROFESSIONAL ENGINEER — BEN URQUIZA — No. 33657 — Exp. 6-30-02 — CIVIL — STATE OF CALIFORNIA

MARK	REVISIONS	APPR.	DATE

DESIGNED BY SK,BU DRAWN BY LFH CHECKED BY

CITY OF RIVERSIDE, CALIFORNIA
PUBLIC WORKS DEPARTMENT

APPROVED BY	BY	DATE
DEPUTY P.W. DIRECTOR	[illegible]	7/15/99
PRINCIPAL ENGINEER	[illegible]	7/15/99
STREET SERVICES	[illegible]	7/15/99
SURVEYOR	[illegible]	7/14/99
	[illegible]	7-14-99

APPROVED BY R. McGrath
PUBLIC WORKS DIRECTOR
DATE 7-14-99

RUBIDOUX AVE. STORM DRAIN
TEQUESQUITE AVE. TO TOWER RD. & BRENTWOOD AVE.

ACCT. NO. 410-541400-440301-20056

D-647

SHEET 1 OF 11

FILE NO.

INDEXED 9-7-99 GH

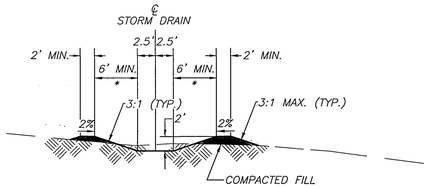

*UNDER CUT CONDITIONS, GRADE TO DAYLIGHT

SCALE: 1"=10'

TYPICAL STORM DRAIN SECTION STA.0–30± TO STA.7+20± S.D.

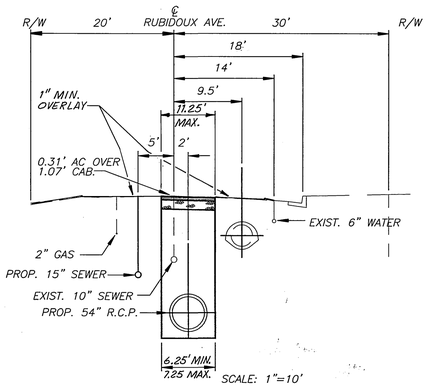

SCALE: 1"=10'

TYPICAL STORM DRAIN SECTION STA.11+00± TO STA.13+20± S.D.

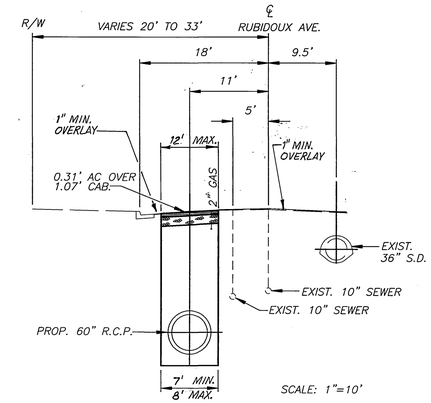

SCALE: 1"=10'

TYPICAL STORM DRAIN SECTION STA. 13+90± TO STA. 16+18±

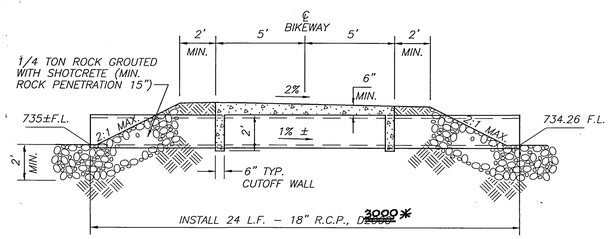

SECTION A–A P.C.C. BIKEWAY DETAIL & 18" LOW FLOW CULVERT DETAIL

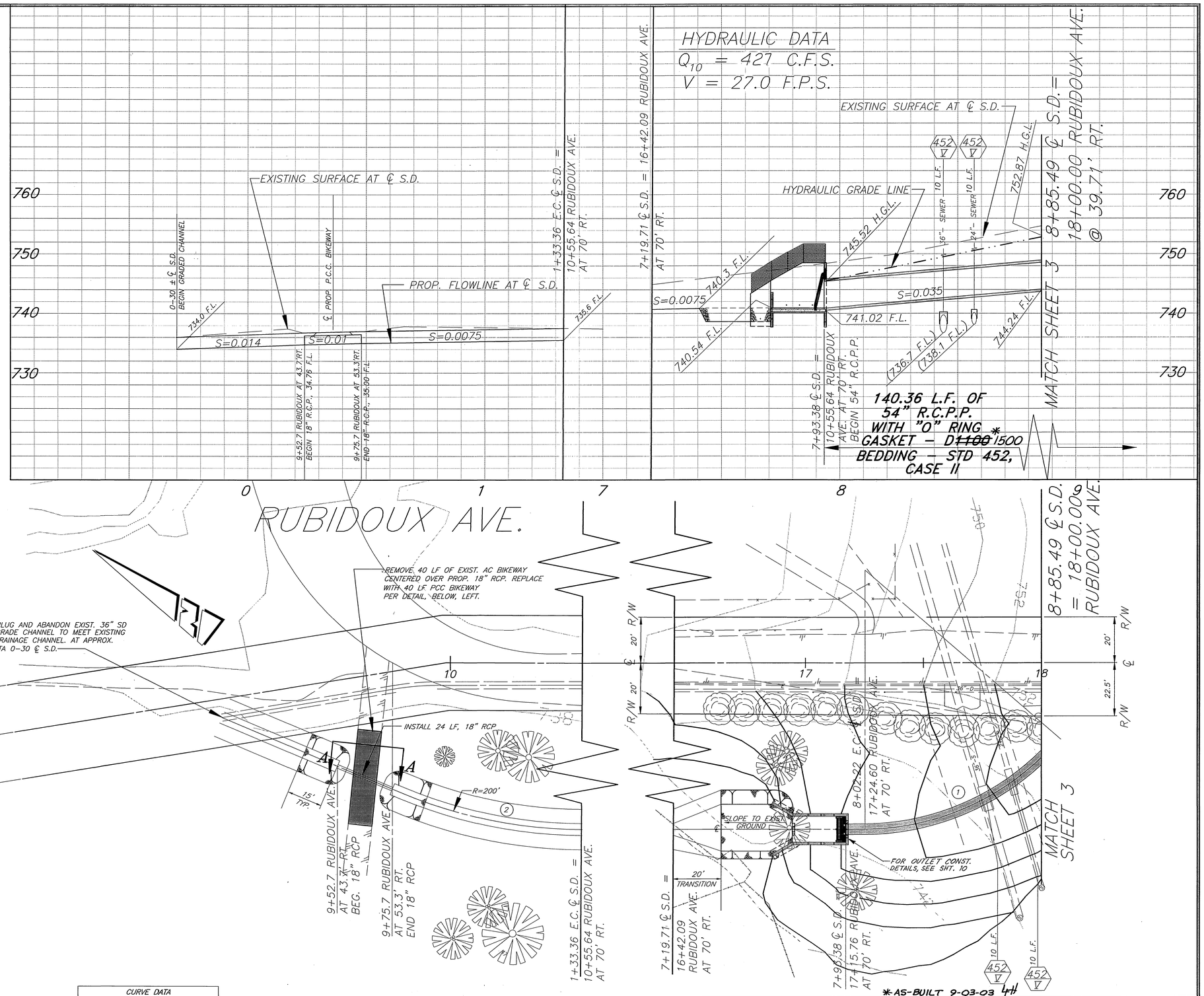

CURVE DATA				
○	DELTA	RADIUS	LENGTH	TANGENT
①	43°46'15"	109.00'	83.27'	43.79'
②	22°23'08"	200.00'	78.14'	39.57'

ENGINEER IN RESPONSIBLE CHARGE

BEN URQUIZA
R.C.E. No. 33657 expires 6/30/02

DATE JULY 12, 1999

REGISTERED PROFESSIONAL ENGINEER BEN URQUIZA No. 33657 Exp. 6-30-02 CIVIL STATE OF CALIFORNIA

MARK	REVISIONS	APPR.	DATE

DESIGNED BY SK, DU DRAWN BY LFH CHECKED BY

CITY OF RIVERSIDE, CALIFORNIA
PUBLIC WORKS DEPARTMENT

APPROVED BY	BY	DATE
DEPUTY P.W. DIRECTOR		7/16/99
PRINCIPAL ENGINEER		7/19/99
STREET SERVICES		7-14-99
SURVEYOR		7/14/99
TRAFFIC DIVISION		
PARKS DEPARTMENT		

APPROVED BY R. McGrath
PUBLIC WORKS DIRECTOR
DATE 7-14-99

RUBIDOUX AVE. STORM DRAIN
TEQUESQUITE AVE. TO TOWER RD. & BRENTWOOD AVE.

HORIZ. SCALE: 1" = 20' VERT. SCALE: 1" = 8'

ACCT. NO. 410-541400-440301-20058

D-647

SHEET 2 OF 11

FILE NO.

INDEXED 9-7-99 LH

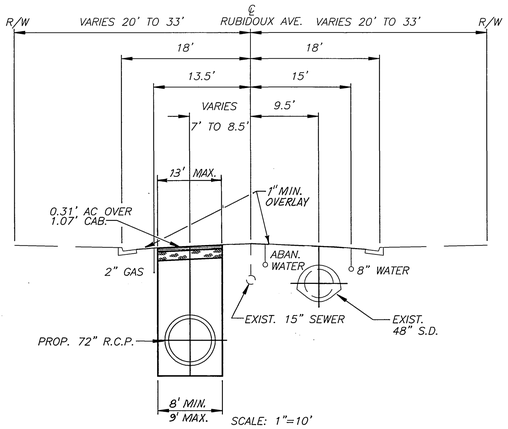

TYP. S.D. SECTION
STA.17+05 TO STA.29+18

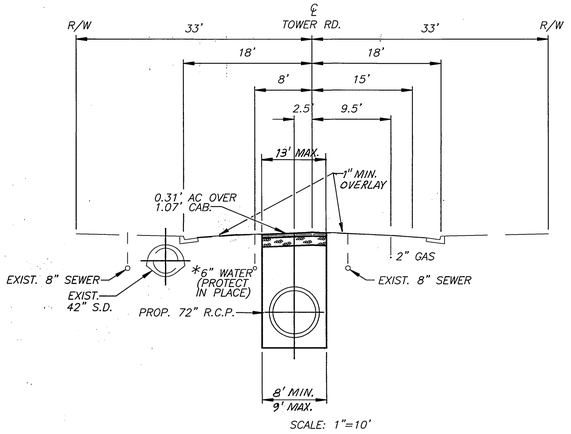

TYP. S.D. SECTION
STA.29+98 TO STA.34+43

* AS THE FIRST ORDER OF WORK AFTER ISSUANCE OF THE NOTICE TO PROCEED, THE CONTRACTOR SHALL POTHOLE TO VERIFY LOCATION OF EXISTING WATER LINE ON TOWER ROAD. POTHOLING SHALL BE AT 100' INTERVALS.

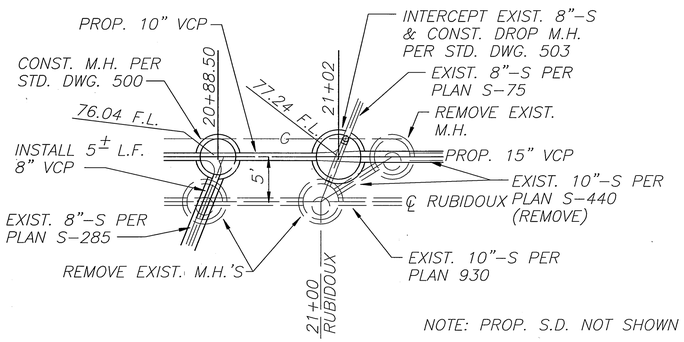

NOTE: PROP. S.D. NOT SHOWN

SEWER CONNECTION DETAIL
SCALE: 1" = 8'
SEWER CONNECTIONS TO PROPOSED SEWER SE'LY OF RUBIDOUX AVE. & OLD RANCH ROAD

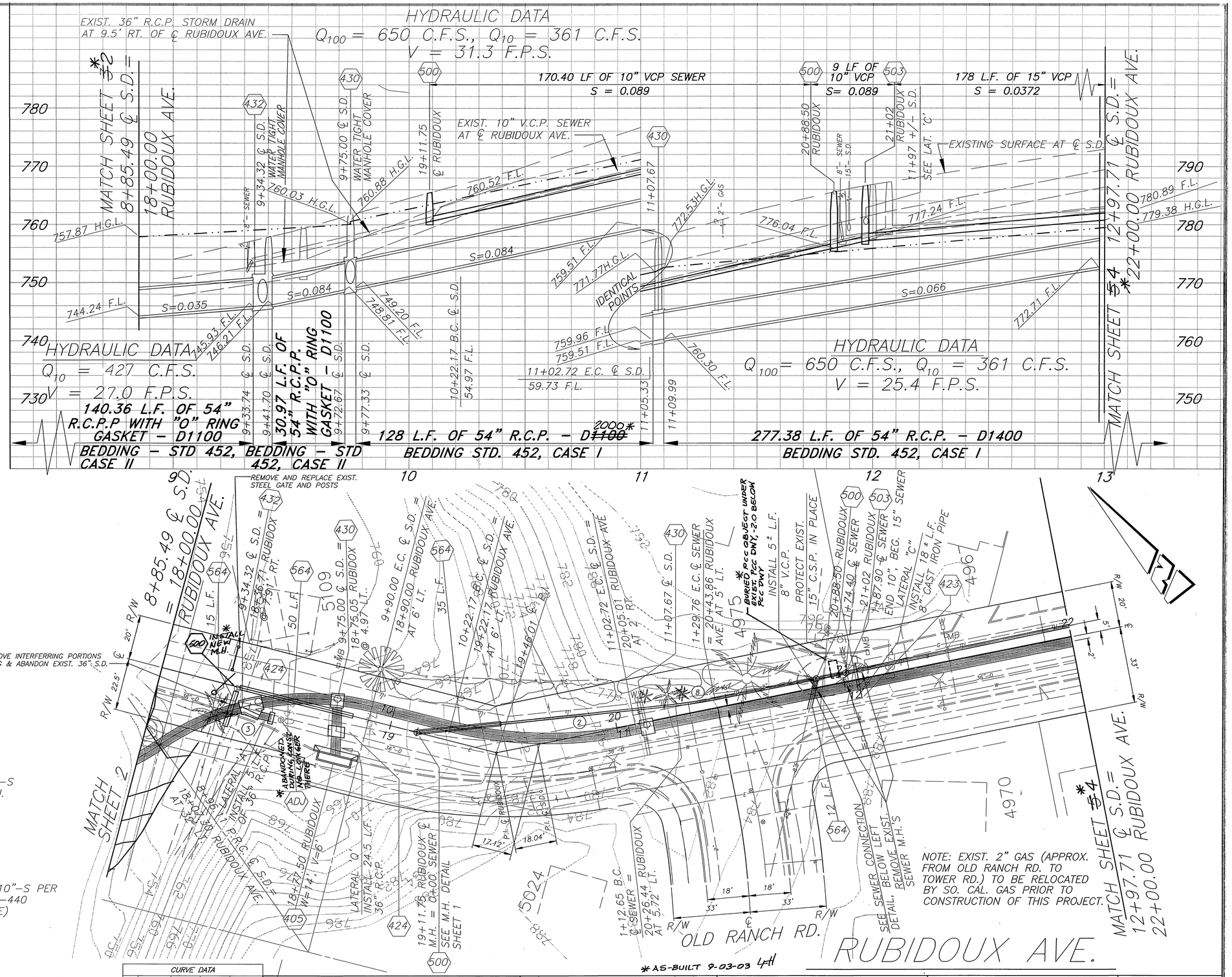

* AS-BUILT 9-03-03 GH

CURVE DATA				
	DELTA	RADIUS	LENGTH	TANGENT
2	25°38'20"	180.00'	80.55'	40.96'
3	49°21'16"	109.00'	93.89'	50.08
8	4°51'15"	202.00'	17.11'	8.56'

ENGINEER IN RESPONSIBLE CHARGE
BEN URQUIZA
R.C.E. No. 33657 expires 6/30/02
DATE JULY 12, 1999

REGISTERED PROFESSIONAL ENGINEER BEN URQUIZA No. 33657 Exp. 6-30-02 CIVIL STATE OF CALIFORNIA

MARK	REVISIONS	APPR.	DATE

DESIGNED BY SK,bu DRAWN BY LFH CHECKED BY

CITY OF RIVERSIDE, CALIFORNIA
PUBLIC WORKS DEPARTMENT

APPROVED BY	BY	DATE
DEPUTY P.W. DIRECTOR	TMS	7/19/99
PRINCIPAL ENGINEER		7/19/99
STREET SERVICES		
SURVEYOR		
TRAFFIC DIVISION		7/20/99
PARKS DEPARTMENT		

APPROVED BY R. McGrath
PUBLIC WORKS DIRECTOR
DATE 7-19-99

RUBIDOUX AVE. STORM DRAIN
TEQUESQUITE AVE. TO TOWER RD. & BRENTWOOD AVE.

HORIZ. SCALE: 1" = 20' VERT. SCALE: 1" = 8'

ACCT. NO. 410-541400-440301-20058

D-647

SHEET 3 OF 11

FILE NO.

INDEXED 9-7-99 GH

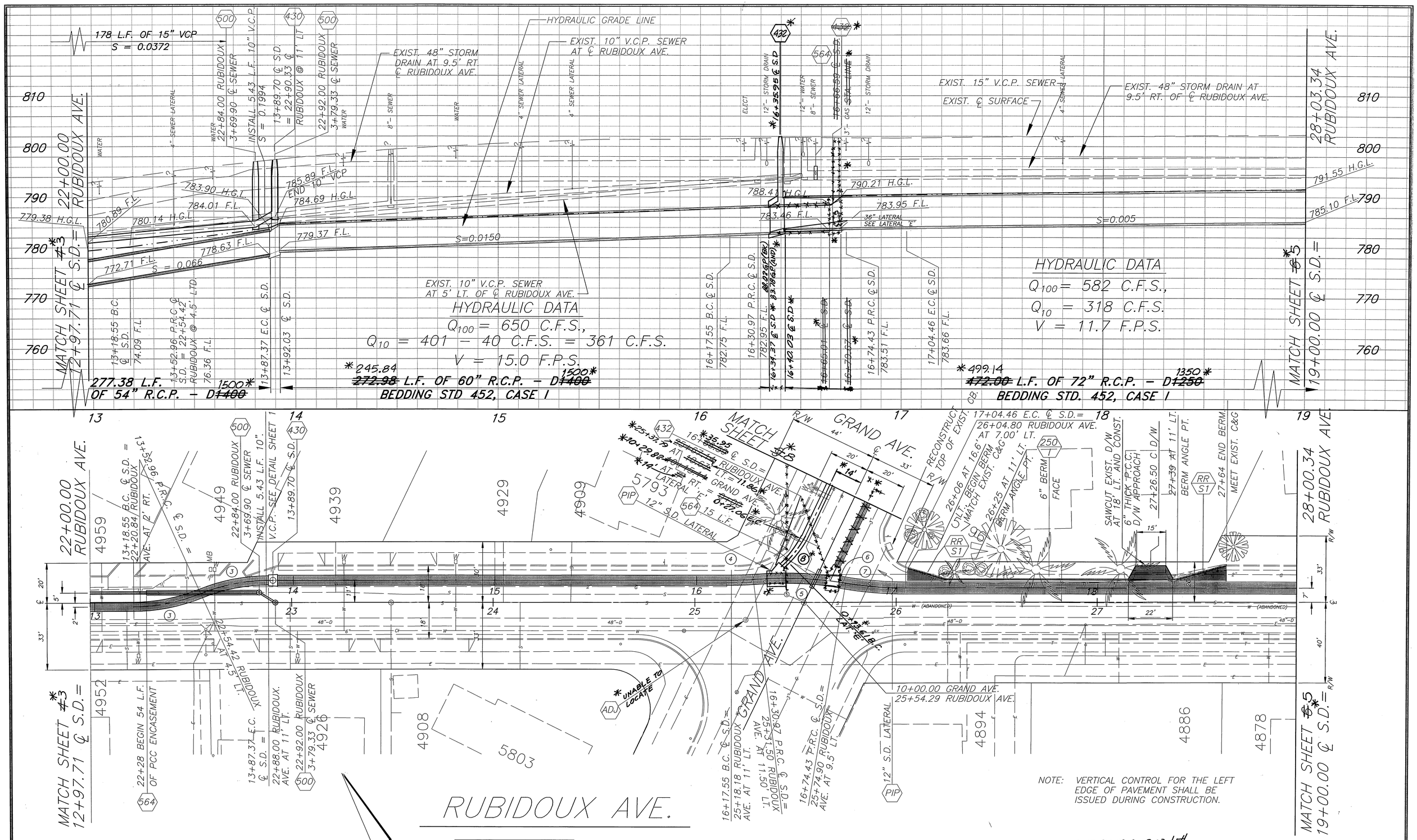

CURVE DATA				
	DELTA	RADIUS	LENGTH	TANGENT
3	21°54'32"	90.00'	34.41'	17.42'
4	4°16'18"	180.00'	13.42'	6.71'
5	11°20'15"	180.00'	35.62'	17.87'
6	2°29'40"	180.00'	7.84'	3.92'
7	9°33'37"	180.00'	30.03'	15.05'
* 8	17°01'08"	45.00'	13.95'	6.77'

ENGINEER IN RESPONSIBLE CHARGE

Ben Urquiza

BEN URQUIZA
R.C.E. No. 33657 expires 6/30/02

DATE JULY 12, 1999

REGISTERED PROFESSIONAL ENGINEER BEN URQUIZA No. 33657 Exp. 6-30-02 CIVIL STATE OF CALIFORNIA

MARK	REVISIONS	APPR.	DATE

DESIGNED BY SK,DU DRAWN BY LFH CHECKED BY

* AS-BUILT 9-03-03 LFH

CITY OF RIVERSIDE, CALIFORNIA
PUBLIC WORKS DEPARTMENT

APPROVED BY	BY	DATE
DEPUTY P.W. DIRECTOR		7/13/99
PRINCIPAL ENGINEER		7/13/99
STREET SERVICES		
SURVEYOR		7/14/99
TRAFFIC DIVISION		
PARKS DEPARTMENT		7/14/99

APPROVED BY R. M. Smith
PUBLIC WORKS DIRECTOR
DATE 7-14-99

RUBIDOUX AVE. STORM DRAIN
TEQUESQUITE AVE. TO TOWER RD. & BRENTWOOD AVE.

HORIZ. SCALE: 1" = 20' VERT. SCALE: 1" = 8'

ACCT. NO. 410-541400-440301-20058

D-647

SHEET 4 OF 11

FILE NO.

INDEXED 9-7-99 LFH

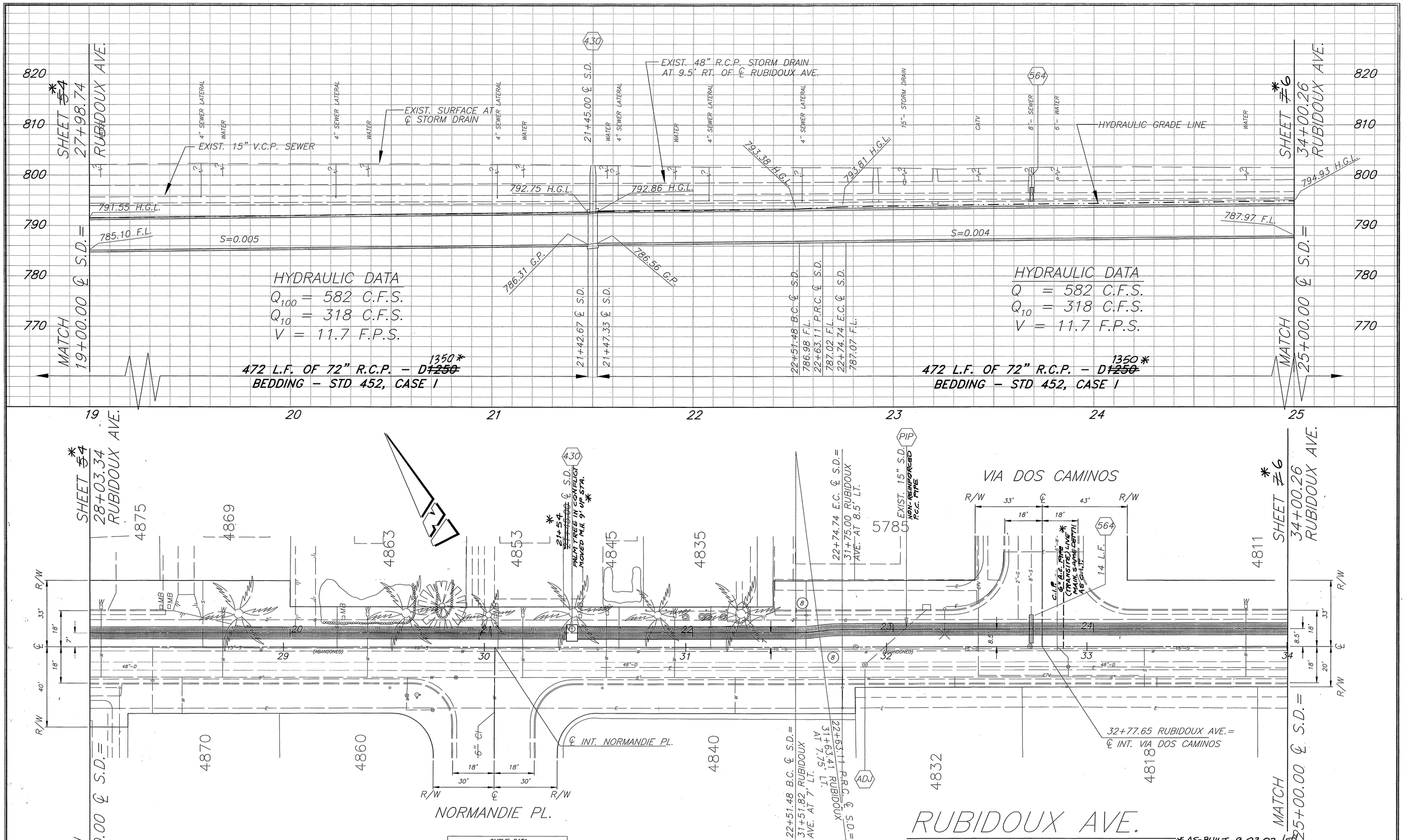

CURVE DATA				
	DELTA	RADIUS	LENGTH	TANGENT
6	7°24'07"	90.00'	11.63'	5.82'

ENGINEER IN RESPONSIBLE CHARGE

BEN URQUIZA
R.C.E. No. 33657 expires 6/30/02

DATE JULY 12, 1999

REGISTERED PROFESSIONAL ENGINEER BEN URQUIZA No. 33657 Exp. 6-30-02 CIVIL STATE OF CALIFORNIA

MARK	REVISIONS	APPR.	DATE

DESIGNED BY SK, PU DRAWN BY LFH CHECKED BY

CITY OF RIVERSIDE, CALIFORNIA
PUBLIC WORKS DEPARTMENT

APPROVED BY	BY	DATE
DEPUTY P.W. DIRECTOR		
PRINCIPAL ENGINEER		
STREET SERVICES		
SURVEYOR		
TRAFFIC DIVISION		
PARKS DEPARTMENT		

APPROVED BY R. McBrath
PUBLIC WORKS DIRECTOR
DATE 7-14-99

RUBIDOUX AVE. STORM DRAIN
TEQUESQUITE AVE. TO TOWER RD. & BRENTWOOD AVE.

HORIZ. SCALE: 1" = 20' VERT. SCALE: 1" = 8'

ACCT. NO. 410-541400-440301-20058

D-647

SHEET 5 OF 11

FILE NO.

*AS-BUILT 9-03-03 LFH

INDEXED 9-7-99 LFH

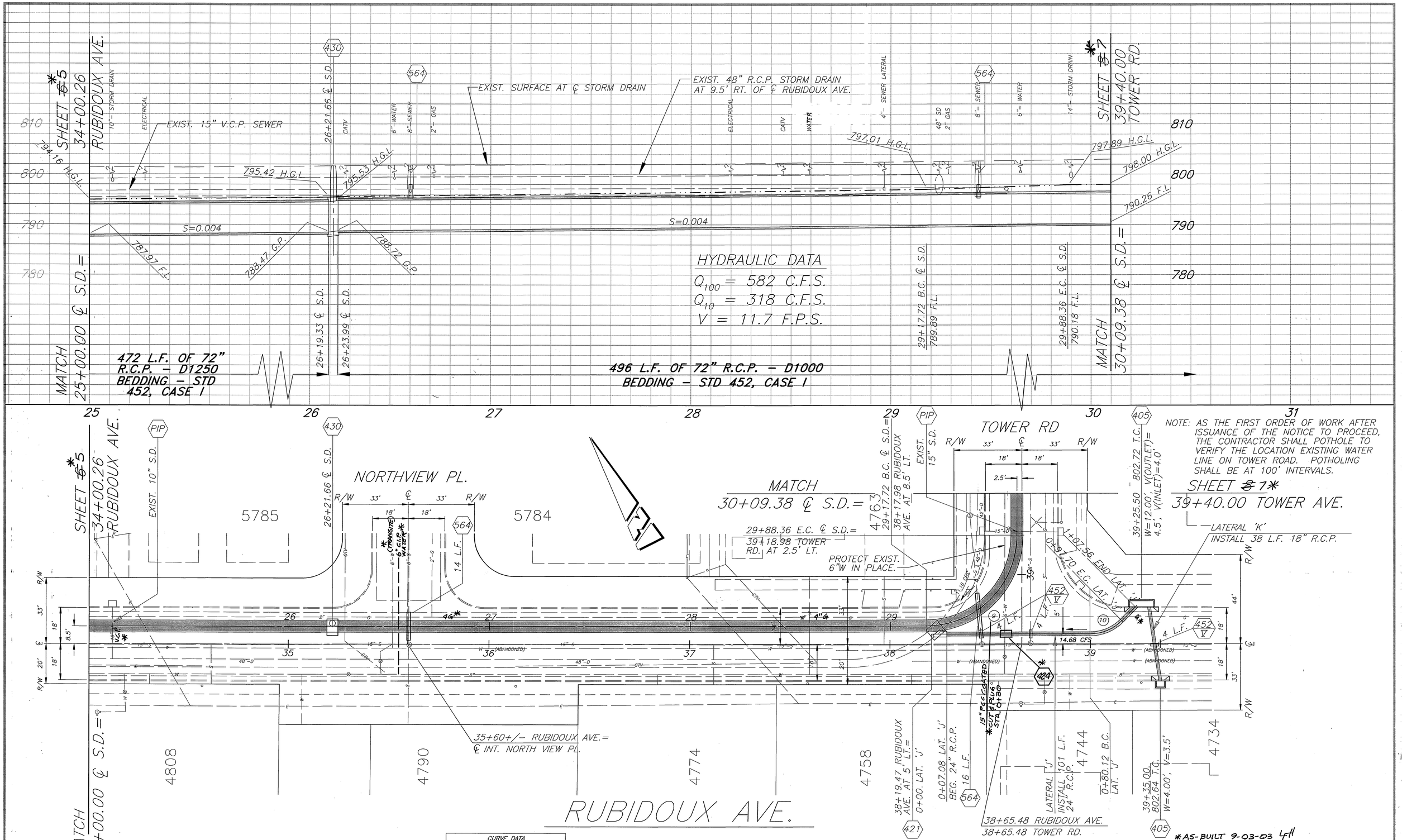

CURVE DATA				
	DELTA	RADIUS	LENGTH	TANGENT
9	89°58'22"	45.00'	70.64'	44.95'
10	45°00'00"	22.50'	17.67'	9.32'

ENGINEER IN RESPONSIBLE CHARGE

BEN URQUIZA
R.C.E. No. 33657 expires 6/30/02

DATE JULY 12, 1999

REGISTERED PROFESSIONAL ENGINEER BEN URQUIZA No. 33657 Exp. 6-30-02 CIVIL STATE OF CALIFORNIA

MARK	REVISIONS	APPR.	DATE

DESIGNED BY BK DU DRAWN BY LFH CHECKED BY

CITY OF RIVERSIDE, CALIFORNIA
PUBLIC WORKS DEPARTMENT

APPROVED BY	BY	DATE
DEPUTY P.W. DIRECTOR	TTC	7/14/99
PRINCIPAL ENGINEER	[illegible]	7/14/99
STREET SERVICES		
SURVEYOR	[illegible]	7/14/99
TRAFFIC DIVISION		
PARKS DEPARTMENT	RC	7/14/99

APPROVED BY R. M. Draft
PUBLIC WORKS DIRECTOR
DATE 7-14-99

RUBIDOUX AVE. STORM DRAIN
TEQUESQUITE AVE. TO TOWER RD. & BRENTWOOD AVE.

HORIZ. SCALE: 1" = 20' VERT. SCALE: 1" = 8'

ACCT. NO. 410-541400-440301-20058

D-647

SHEET 6 OF 11

FILE NO.

INDEXED 9-7-99 LFH

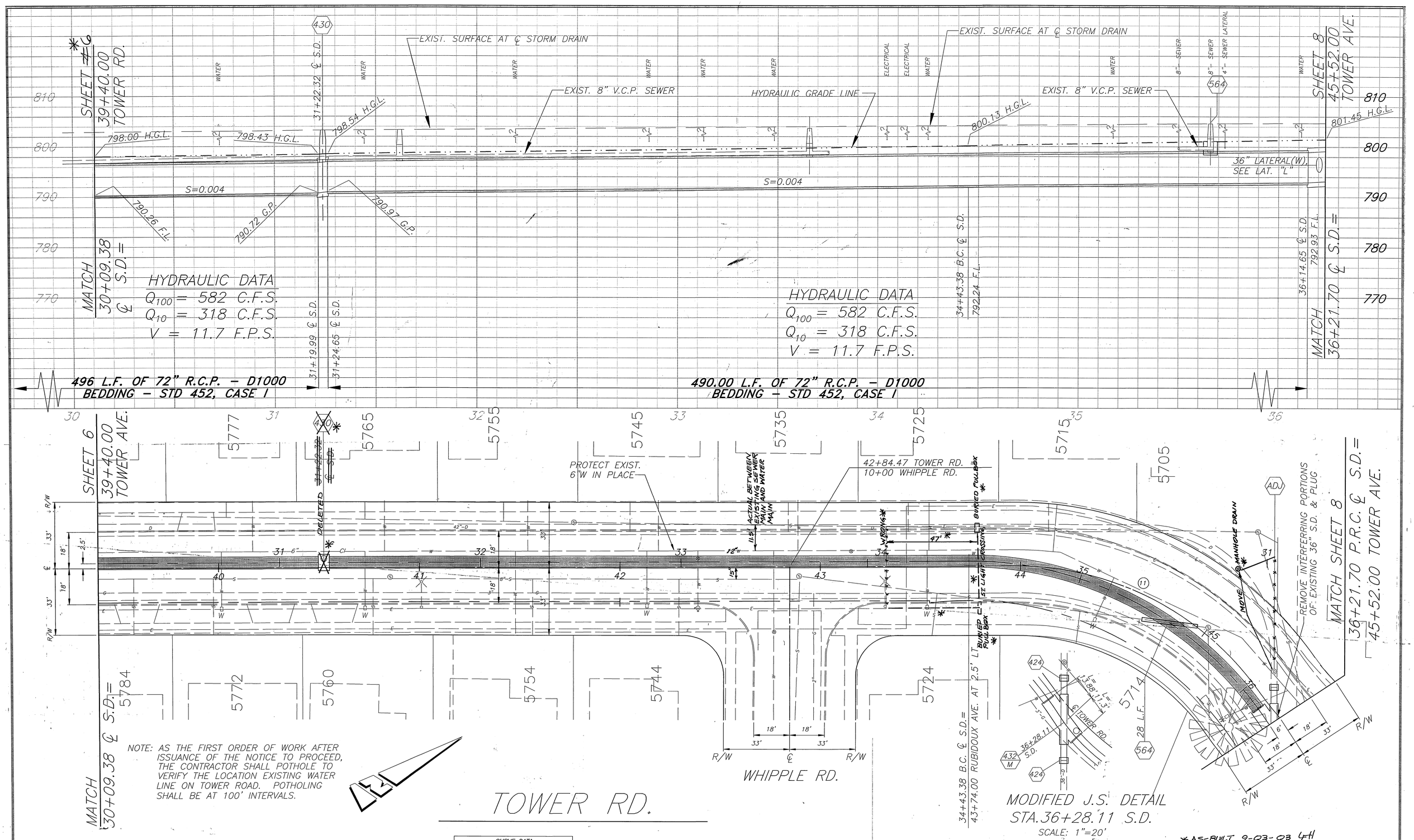

CURVE DATA				
	DELTA	RADIUS	LENGTH	TANGENT
11	55°45'44"	180.00'	178.32'	97.25'

ENGINEER IN RESPONSIBLE CHARGE
Ben Urquiza
BEN URQUIZA
R.C.E. No. 33657 expires 6/30/02
DATE JULY 12, 1999

REGISTERED PROFESSIONAL ENGINEER BEN URQUIZA No. 33657 Exp. 6-30-02 CIVIL STATE OF CALIFORNIA

MARK	REVISIONS	APPR.	DATE

DESIGNED BY SK,BU DRAWN BY LFH CHECKED BY

CITY OF RIVERSIDE, CALIFORNIA
PUBLIC WORKS DEPARTMENT

APPROVED BY	BY	DATE
DEPUTY P.W. DIRECTOR		7/14/99
PRINCIPAL ENGINEER		7/14/99
STREET SERVICES		7/14/99
SURVEYOR		7/14/99
TRAFFIC DIVISION		
PARKS DEPARTMENT		7/14/99

APPROVED BY R. McDrath
PUBLIC WORKS DIRECTOR
DATE 7-14-99

RUBIDOUX AVE. STORM DRAIN
TEQUESQUITE AVE. TO TOWER RD. & BRENTWOOD AVE.

HORIZ. SCALE: 1" = 20' VERT. SCALE: 1" = 8'

ACCT. NO. 410-541400-440301-20058

D-647

SHEET 7 OF 11

FILE NO.

*AS-BUILT 9-03-03 LFH

INDEXED 9-7-99 LFH

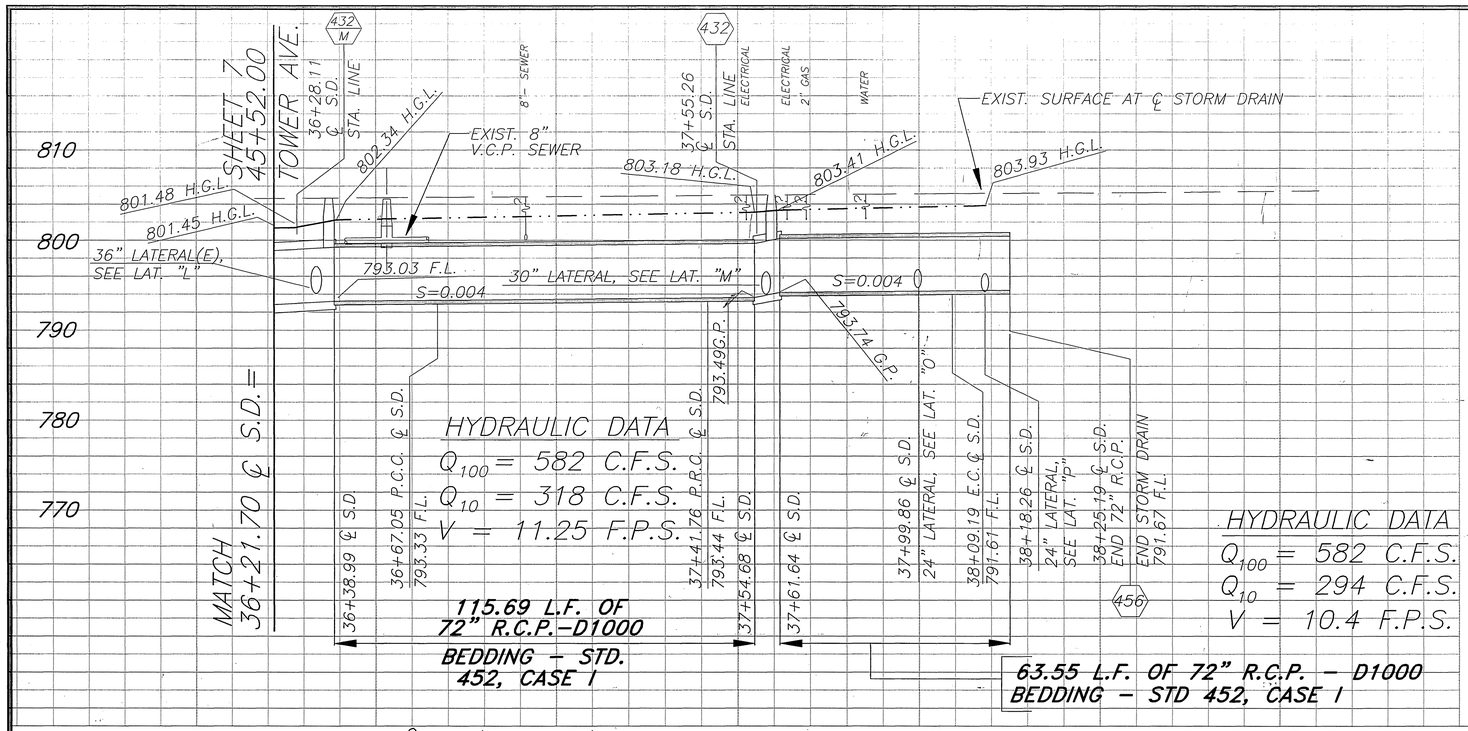

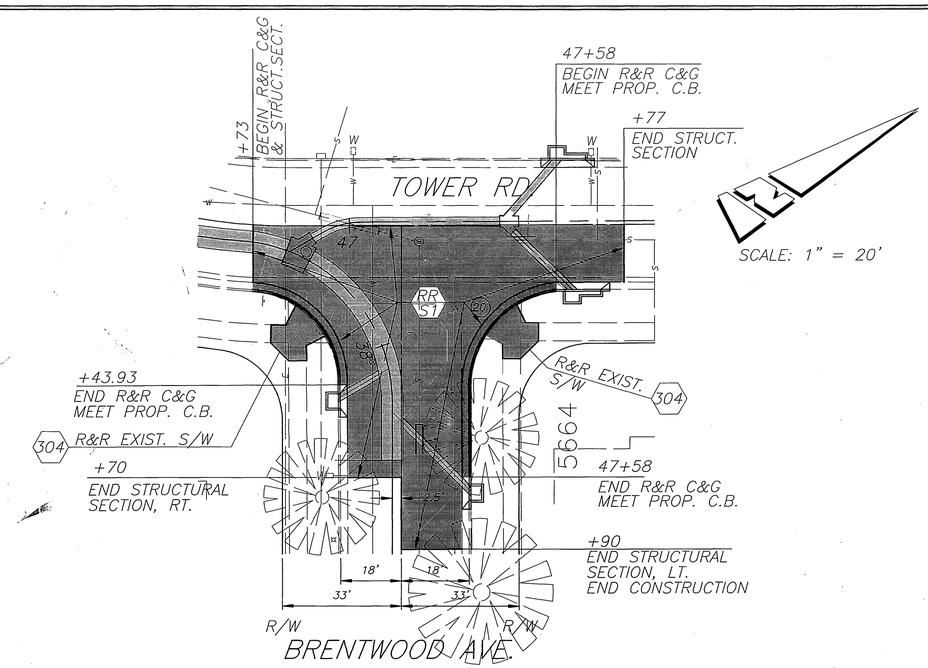

INTERSECTION RECONSTRUCTION DETAIL

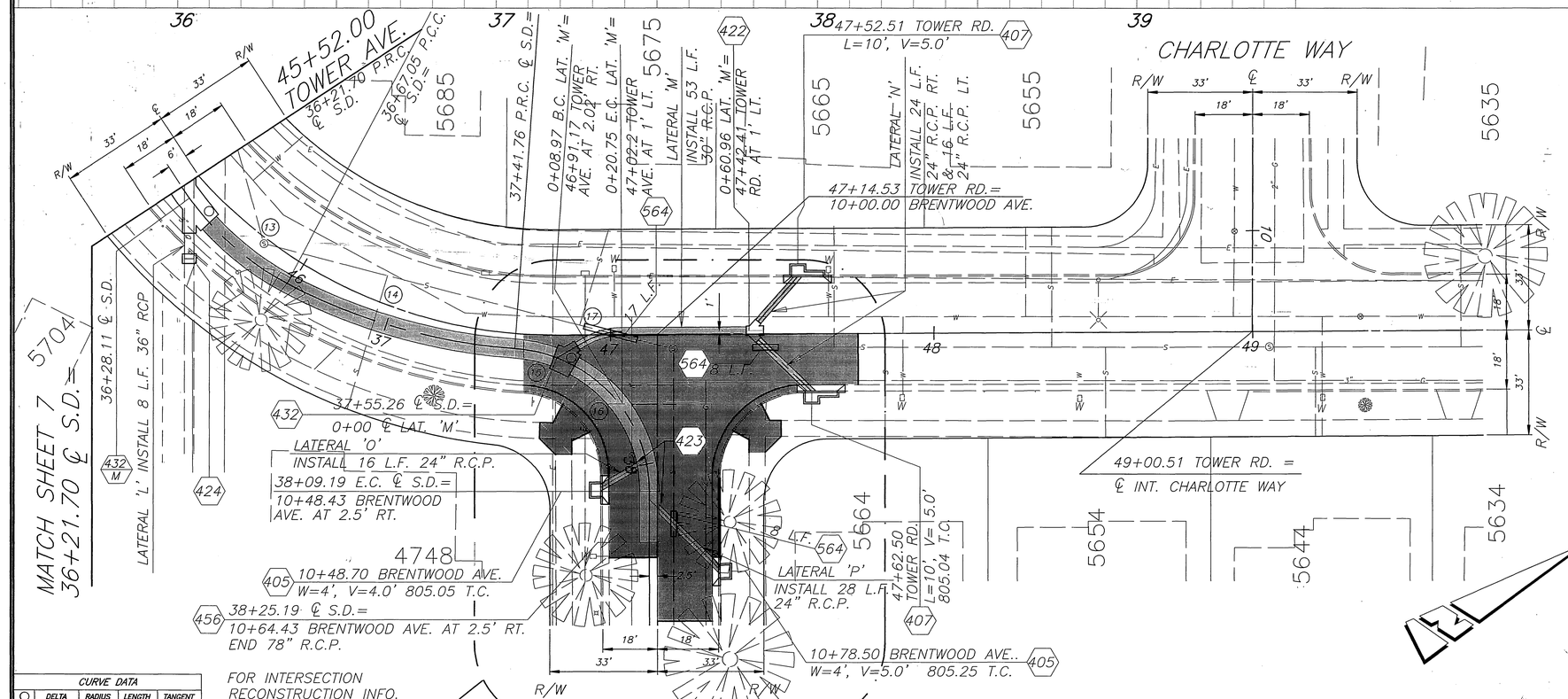

FOR INTERSECTION RECONSTRUCTION INFO. SEE DETAIL, ABOVE RIGHT

CURVE DATA				
○	DELTA	RADIUS	LENGTH	TANGENT
(13)	28°52'14"	90.00'	45.35'	23.17'
(14)	23°46'55"	180.00'	74.71'	37.90'
(15)	17°11'24"	45.00	13.50'	6.80'
(16)	68°39'59"	45.00'	53.93	30.74'
(17)	30°00'00"	22.50'	11.78'	6.03'
(18)	45°00'00"	22.50'	17.67'	9.32'
(19)	85°51'10"	27.00'	40.46'	25.11'
(20)	89°58'30"	27.00'	42.40'	26.52'

PER PLAN 1547A
PER PLAN 1547A

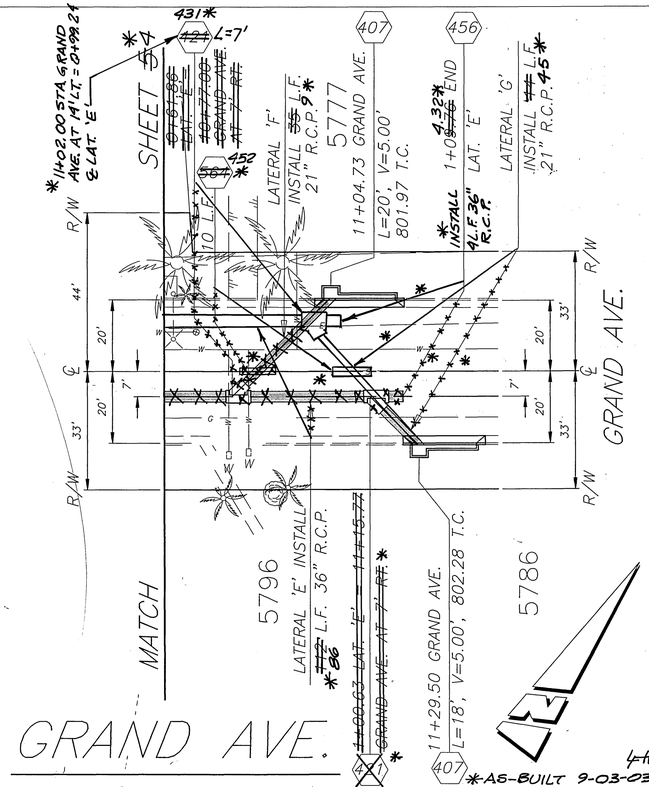

ENGINEER IN RESPONSIBLE CHARGE

Ben Urquiza
BEN URQUIZA
R.C.E. No. 33657 expires 6/30/02
DATE JULY 12, 1999

REGISTERED PROFESSIONAL ENGINEER BEN URQUIZA No. 33657 Exp. 6-30-02 CIVIL STATE OF CALIFORNIA

MARK	REVISIONS	APPR.	DATE

DESIGNED BY SK,PU DRAWN BY LFH CHECKED BY

CITY OF RIVERSIDE, CALIFORNIA
PUBLIC WORKS DEPARTMENT

APPROVED BY	BY	DATE
DEPUTY P.W. DIRECTOR		7/19/99
PRINCIPAL ENGINEER		7/19/99
STREET SERVICES		
SURVEYOR		7/19/99
TRAFFIC DIVISION		
PARKS DEPARTMENT		7/19/99

APPROVED BY R. McGrath
PUBLIC WORKS DIRECTOR
DATE 7-19-99

RUBIDOUX AVE. STORM DRAIN
TEQUESQUITE AVE. TO TOWER RD. & BRENTWOOD AVE.

HORIZ. SCALE: 1" = 20' VERT. SCALE: 1" = 8'

ACCT. NO. 410-541400-440301-20058

D-647

SHEET 8 OF 11

FILE NO.

INDEXED 9-7-99 LH

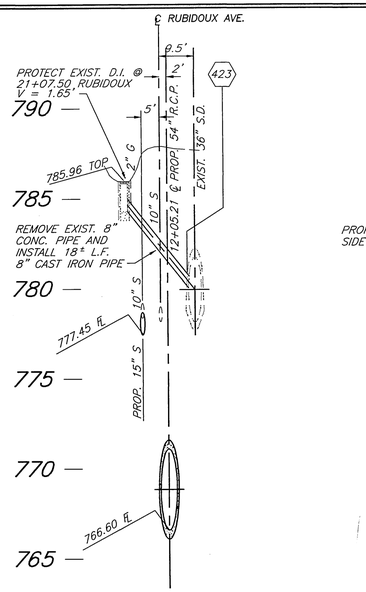

PROFILE LATERAL "C"
SCALE: 1"=20' HORIZ., 1" = 4' VERT.

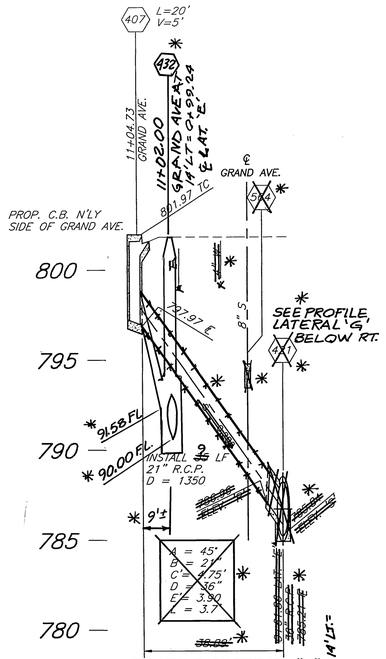

PROFILE LATERAL "F"
SCALE: 1"=20' HORIZ., 1"=4' VERT.

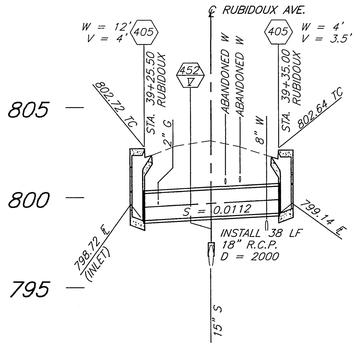

PROFILE LATERAL "K"
SCALE: 1"=20' HORIZ., 1"=4' VERT.

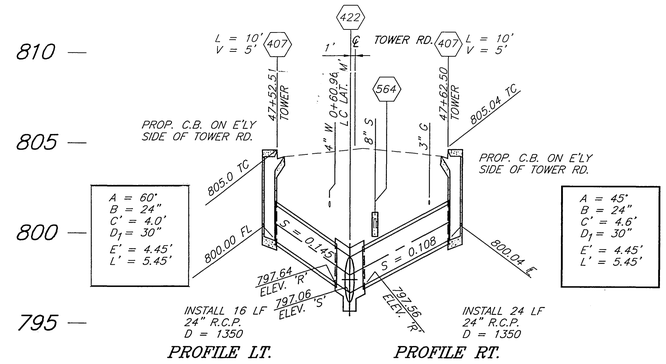

PROFILE LT. PROFILE RT.

PROFILE LATERAL "N"
SCALE: 1"=20' HORIZ., 1"=4' VERT.

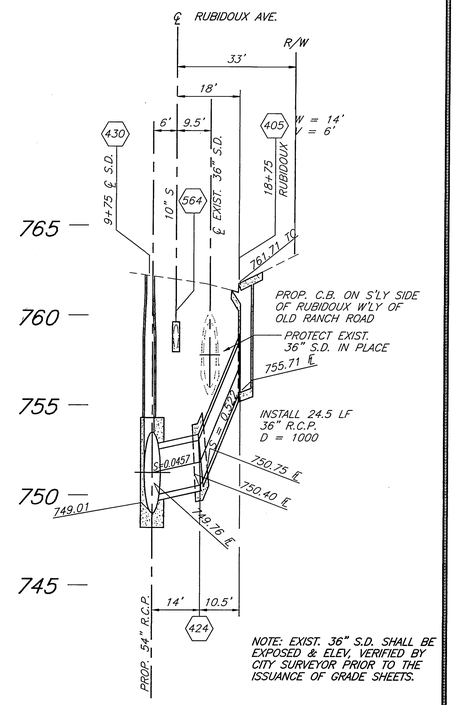

PROFILE LATERAL "Q"
SCALE: 1"=20' HORIZ., 1"=4' VERT.

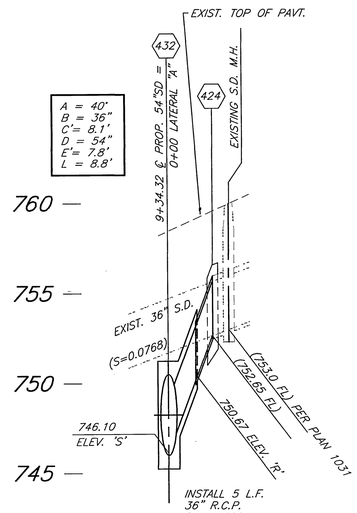

18+36.71 RUBIDOUX
PROFILE LATERAL "A"
SCALE: 1"=20' HORZ., 1" = 4' VERT.

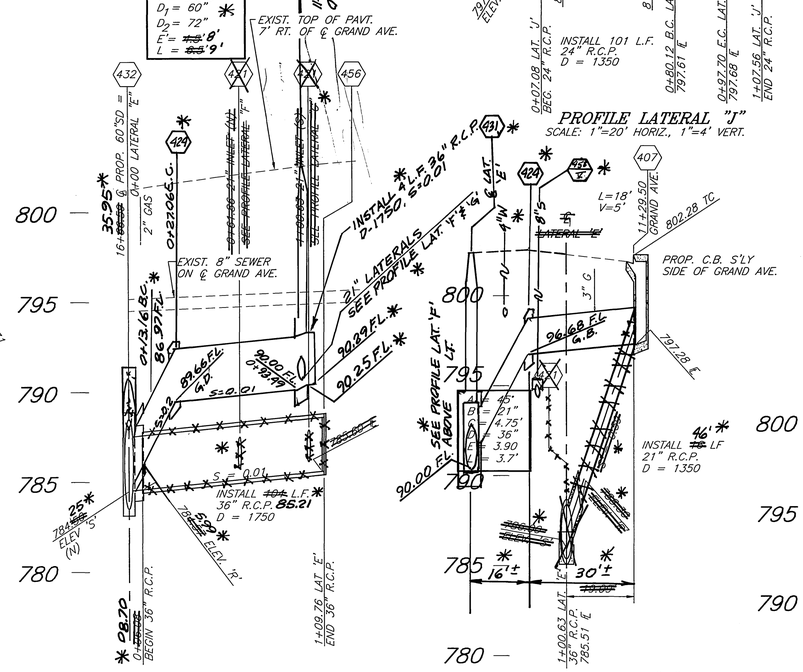

PROFILE LATERAL "E"
SCALE: 1"=40' HORIZ., 1"=4' VERT.
LOOKING DOWNSTREAM (MAIN LINE)

PROFILE LATERAL "G"
SCALE: 1"=20' HORIZ., 1"=4' VERT.

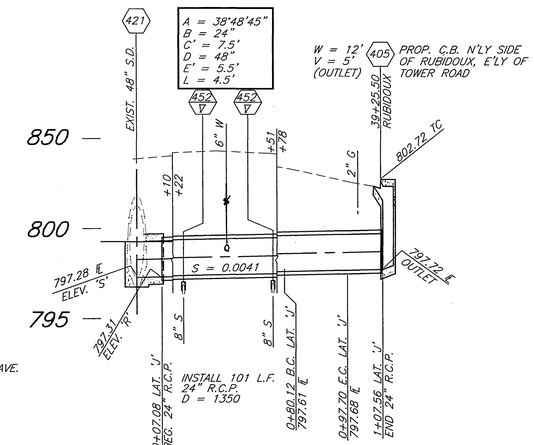

PROFILE LATERAL "J"
SCALE: 1"=20' HORIZ., 1"=4' VERT.

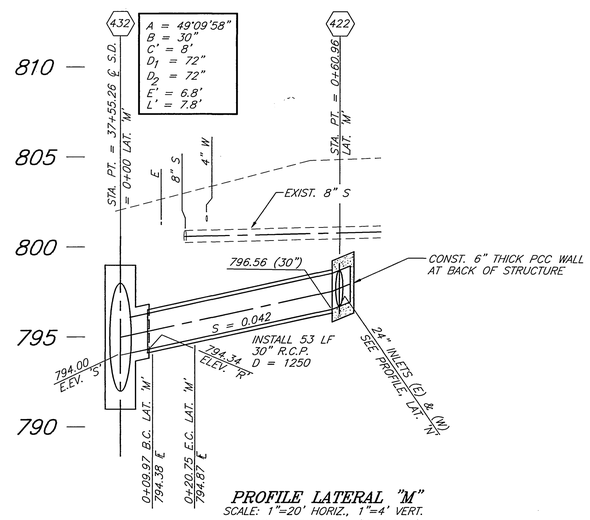

PROFILE LATERAL "M"
SCALE: 1"=20' HORIZ., 1"=4' VERT.
LOOKING DOWNSTREAM (MAIN LINE)

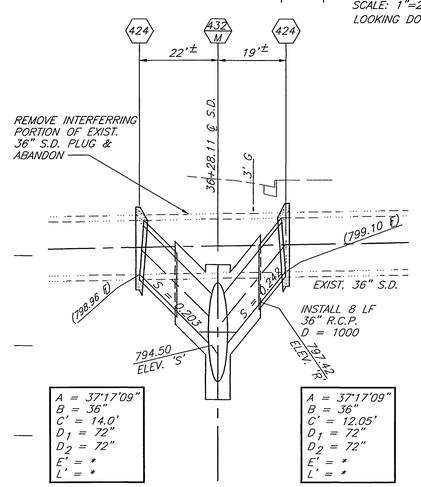

*SEE DETAIL SHEET 7
PROFILE LATERAL "L"
SCALE: 1"=20' HORIZ., 1"=4' VERT.

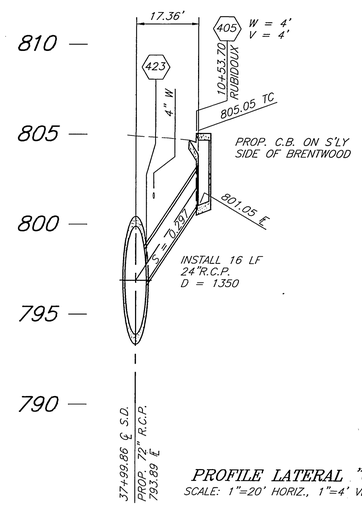

PROFILE LATERAL "O"
SCALE: 1"=20' HORIZ., 1"=4' VERT.

*AS-BUILT 9-03-03 GH

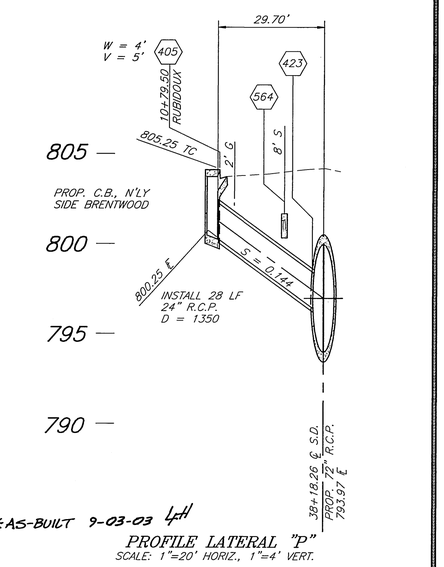

PROFILE LATERAL "P"
SCALE: 1"=20' HORIZ., 1"=4' VERT.

ENGINEER IN RESPONSIBLE CHARGE
BEN URQUIZA
R.C.E. No. 33657 expires 6/30/02
DATE JULY 12, 1999

REGISTERED PROFESSIONAL ENGINEER BEN URQUIZA No. 33657 Exp. 6-30-02 CIVIL STATE OF CALIFORNIA

MARK	REVISIONS	APPR.	DATE

DESIGNED BY SK, BU DRAWN BY LFM CHECKED BY

CITY OF RIVERSIDE, CALIFORNIA
PUBLIC WORKS DEPARTMENT

APPROVED BY	BY	DATE
DEPUTY P.W. DIRECTOR		7/12/99
PRINCIPAL ENGINEER		7/12/99
STREET SERVICES		
SURVEYOR		7/14/99

APPROVED BY R. McGrath
PUBLIC WORKS DIRECTOR
DATE 7-14-99

RUBIDOUX AVE. STORM DRAIN
TEQUESQUITE AVE. TO TOWER RD. & BRENTWOOD AVE.

ACCT. NO. 410-541400-440301-20058
D-647
SHEET 9 OF 11
FILE NO.

INDEXED 9-7-99 GH

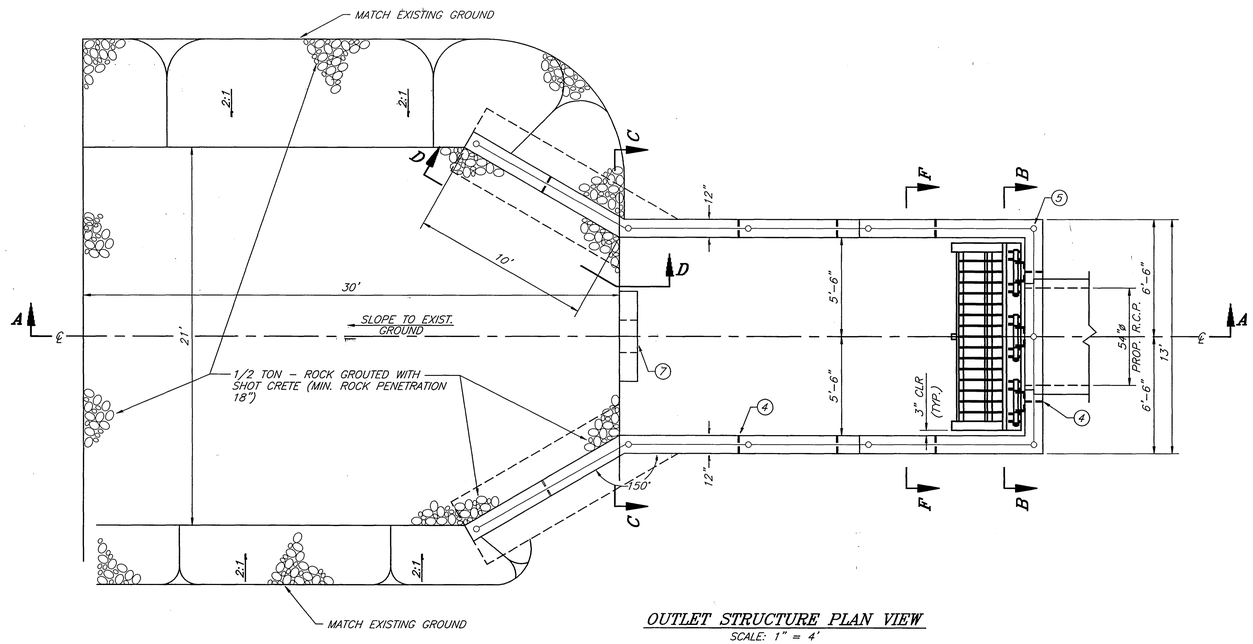

OUTLET STRUCTURE PLAN VIEW

SCALE: 1" = 4'

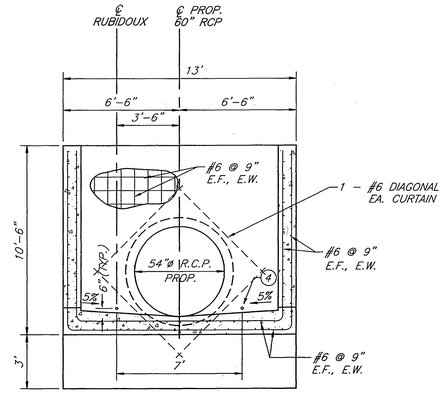

SECTION B–B

SCALE: 1" = 4'

CONSTRUCTION NOTES:

1. ALL STEEL SHALL HAVE 2" COVER UNLESS OTHERWISE NOTED.
2. 6" STARTER WALL WITH CONSTRUCTION JOINT TO BE USED IN ALL CASES.
3. 1/2 TON ROCK SLOPE PROTECTION.
4. CONSTRUCT 1–1/2" DIAMETER WEEP HOLES WITH RODENT SCREENS AND 1 CU. FT. OF FILTER MATERIAL AT EACH HOLE.
5. FOR CHAIN LINK FENCE SEE STD. DWG. 380.
6. ALL EXPOSED CONCRETE EDGES SHALL HAVE A 3/4" CHAMFER.
7. 18" DIAMETER HOLE.
8. INTERSECTING WALL AND CORNER DETAILS TYPICAL ALL CORNERS AND INTERSECTIONS.

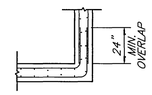

DETAIL H

SCALE: 1" = 4'

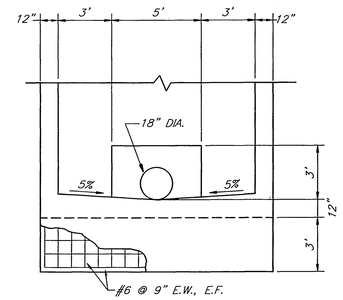

SECTION C–C

SCALE: 1" = 4'

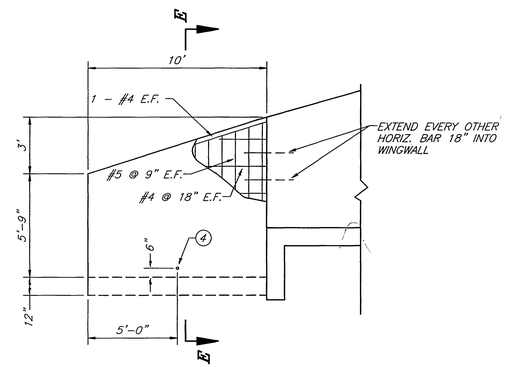

SECTION D–D

SCALE: 1" = 4'

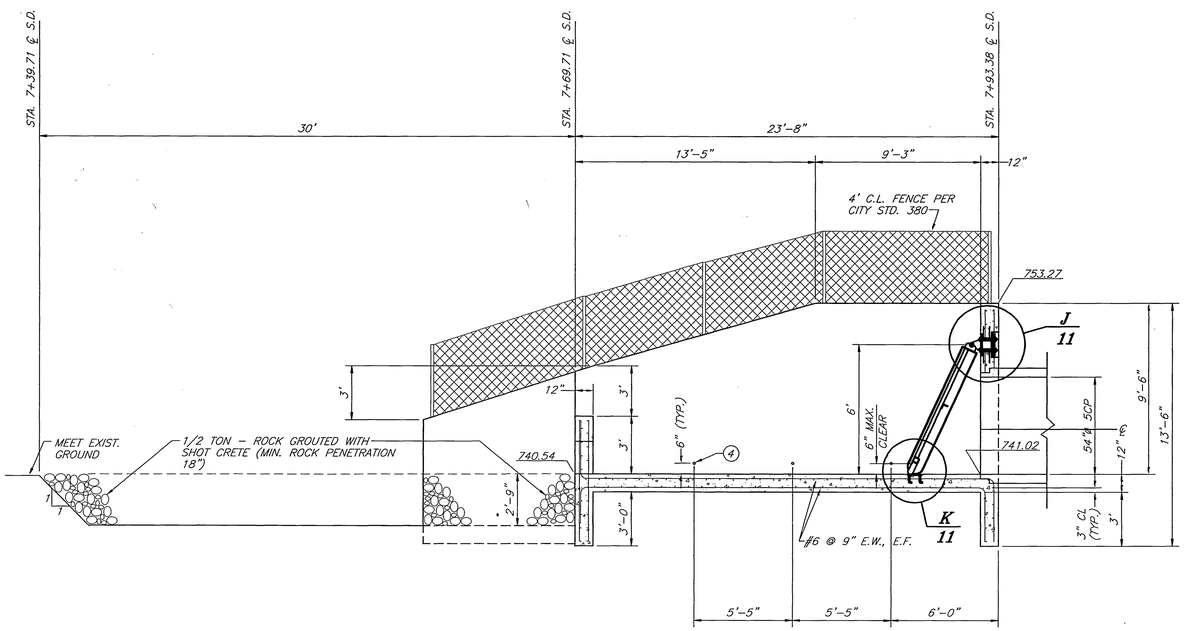

OUTLET STRUCTURE SECTION A–A

SCALE: 1" = 4'

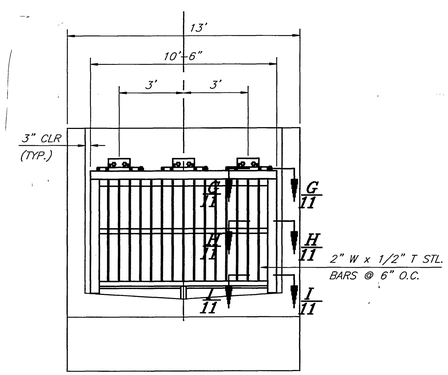

SECTION F–F

SCALE: 1" = 4'

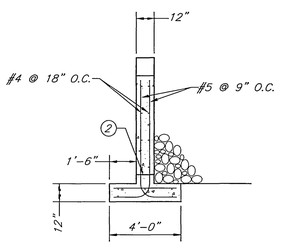

SECTION E–E

SCALE: 1" = 4'

*AS-BUILT 9-03-03 4H

ENGINEER IN RESPONSIBLE CHARGE

Ben Urquiza

BEN URQUIZA
R.C.E. No. 33657 expires 6/30/02

DATE JULY 12, 1999

REGISTERED PROFESSIONAL ENGINEER BEN URQUIZA No. 33657 Exp. 6-30-02 CIVIL STATE OF CALIFORNIA

MARK	REVISIONS	APPR.	DATE

DESIGNED BY SK, DU DRAWN BY LFH CHECKED BY

CITY OF RIVERSIDE, CALIFORNIA
PUBLIC WORKS DEPARTMENT

APPROVED BY	BY	DATE
DEPUTY P.W. DIRECTOR		7/14/99
PRINCIPAL ENGINEER		7/14/99
STREET SERVICES		
SURVEYOR		7/14/99

APPROVED BY R. McGrath
PUBLIC WORKS DIRECTOR
DATE 7-14-99

RUBIDOUX AVE. STORM DRAIN

TEQUISQUITE AVE. TO TOWER RD. & BRENTWOOD AVE.

ACCT. NO. 410-541400-440301-20058

D-647

SHEET 10 OF 11

FILE NO.

INDEXED 9-7-99 4H

SLOPED PROTECTION BARRIER NOTES:

1. WHENEVER RCB SIZE FALLS BETWEEN SIZES SHOWN ON THE TABLE THE NEXT LARGER SIZE SHALL BE USED.
2. ALL FRAME MEMBERS SHALL BE ASTM A 36 OR BETTER.
3. ALL HINGE ASSEMBLIES AND BASE PLATES SHALL BE STAINLESS STEEL.
4. THE CONTRACTOR SHALL MAKE ANY NECESSARY MODIFICATIONS TO ALLOW FOR THE SIMPLE REMOVAL OR INSERTION OF HINGE PINS IN ORDER TO INSTALL OR REMOVE THE PROTECTION BARRIER. ENDS OF HINGE PINS SHALL BE THREADED IN ORDER THAT NUTS AND LOCK WASHERS WILL BE FLUSH WITH THE HINGE PIPE. THREADS BEYOND THE NUT FACE SHALL BE DAMAGED TO PREVENT REMOVAL.
5. ALL FRAME MEMBERS SHALL BE GALVANIZED AFTER FABRICATION.
6. IF FIELD WELDS ARE NECESARY, GALVICON, GALVALLOY OR AGENCY APPROVED EQUAL SHALL BE USED FOR COATING.
7. MID-BUMPER SHALL BE USED FOR THREE HINGED BARRIERS.
8. ANY DEVIATIONS OR MODIFICATIONS TO THIS STANDARD SHALL BE APPROVED BY THE AGENCY.
9. AT OCEAN OUTLETS OR WHEREVER THE TOP SLAB SERVES AS A PUBLIC WALKWAY, THE TOP SLAB THICKNESS SHALL BE INCREASED BY 3" IN ORDER TO PROVIDE A RECESS FOR THE HINGE TOP PLATE. THE RECESS SHALL BE BACKFILLED WITH GROUT AND SMOOTHED AS AS SHOWN.
10. PROTECTION BARRIERS FOR RCB CONDUITS SHALL BE SLOPED TO SWING OPEN IN THE DIRECTION OF FLOW.
11. MEMBERS SHALL BE SELECTED FROM TABLE 1 UNLESS OTHERWISE NOTED.
12. DESIGN LOADS:
    A. INLET/OUTLET: BULKED EFD = 85 PCF.
    B. OCEAN OUTLETS:
       1. 1800 PSF @ SAND PLATE AREA
       2. 600 PSF @ LOWER OPEN AREA

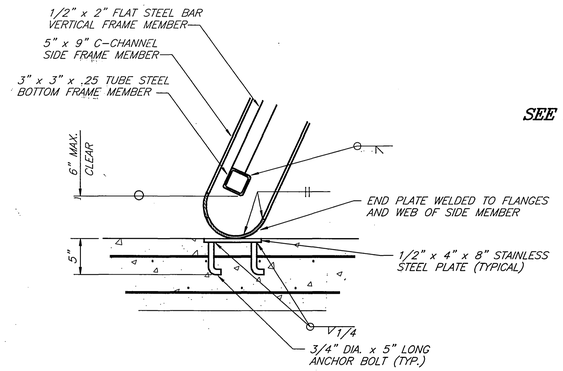

BASE PLATE DETAIL – K
N.T.S.

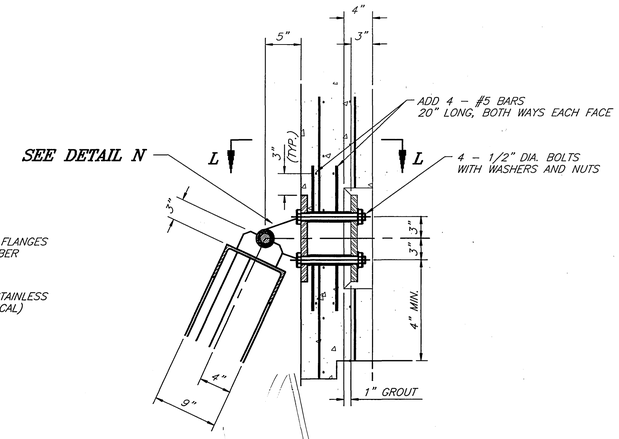

24" HINGE CLEARANCE DETAIL – J
N.T.S.

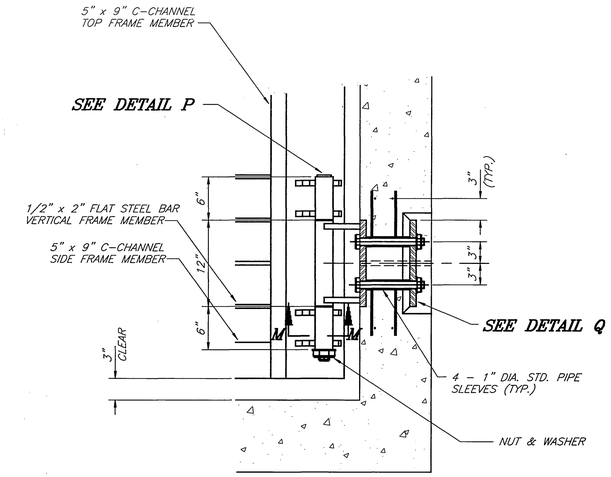

24" HINGE CLEARANCE SECTION L–L
N.T.S.

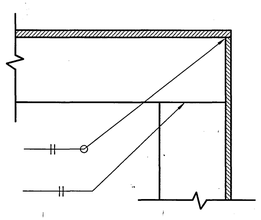

SECTION T – T
N.T.S.

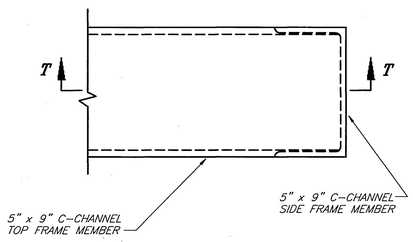

SECTION G – G
N.T.S.

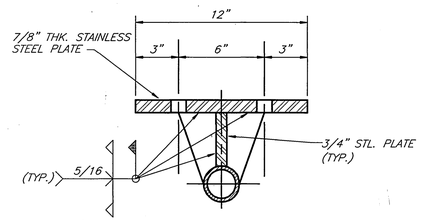

PLATE SECTION S – S
N.T.S.

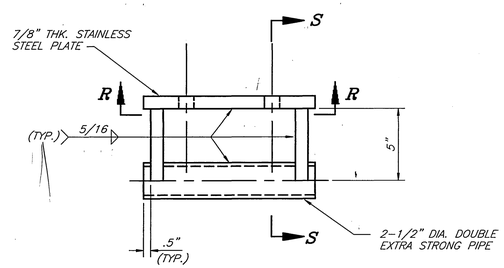

CENTER HINGE DETAIL – N
N.T.S.

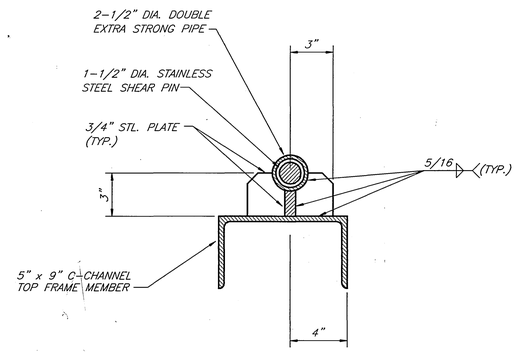

SECTION M–M
N.T.S.

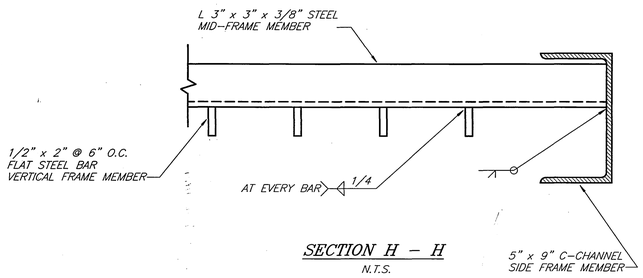

SECTION H – H
N.T.S.

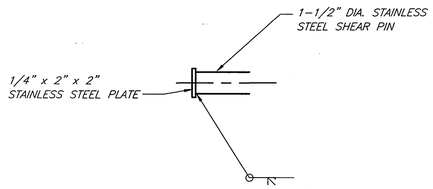

SHEAR PIN DETAIL – P
N.T.S.

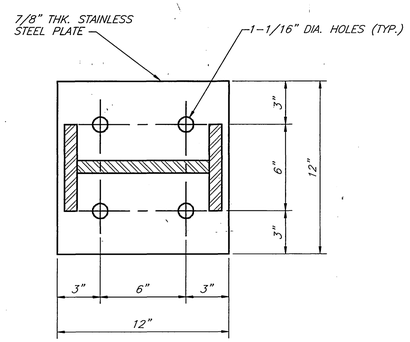

PLATE SECTION R – R
N.T.S.

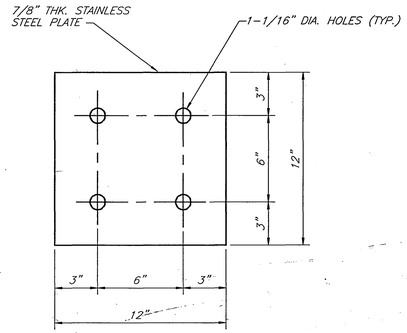

PLATE DETAIL – Q
N.T.S.

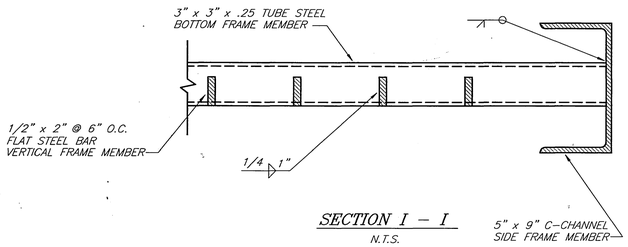

SECTION I – I
N.T.S.

* AS-BUILT 9-03-03 4-H

ENGINEER IN RESPONSIBLE CHARGE
BEN URQUIZA
R.C.E. No. 33657 expires 6/30/02
DATE JULY 12, 1999

REGISTERED PROFESSIONAL ENGINEER BEN URQUIZA No. 33657 Exp. 6-30-02 CIVIL STATE OF CALIFORNIA

MARK	REVISIONS	APPR.	DATE

DESIGNED BY SK, BU DRAWN BY LFH CHECKED BY

CITY OF RIVERSIDE, CALIFORNIA
PUBLIC WORKS DEPARTMENT

APPROVED BY	BY	DATE
DEPUTY P.W. DIRECTOR		7/12/99
PRINCIPAL ENGINEER		7/12/99
STREET SERVICES		
SURVEYOR		7/14/99

APPROVED BY R. McDrath
PUBLIC WORKS DIRECTOR
DATE 7-14-99

RUBIDOUX AVE. STORM DRAIN
TEQUISQUITE AVE. TO TOWER RD. & BRENTWOOD AVE.

ACCT. NO. 410-541400-440301-20058
D-647
SHEET 11 OF 11
FILE NO.

INDEXED 9-7-99 4-H