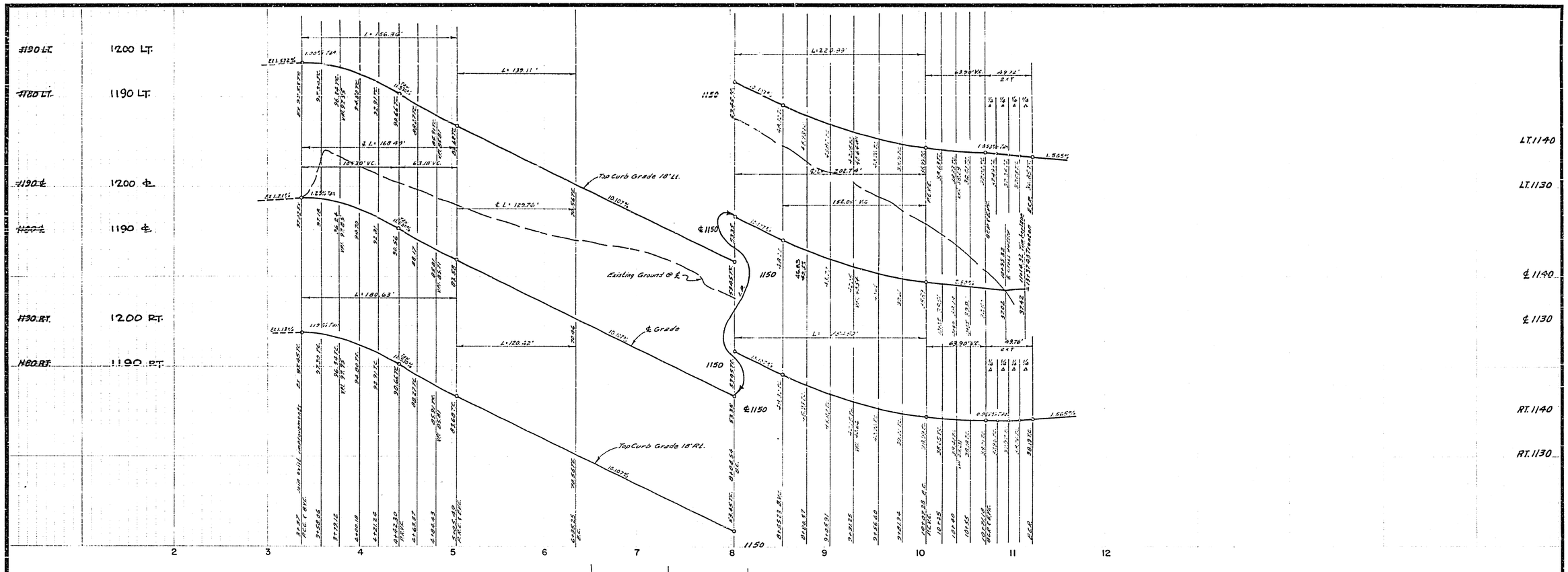

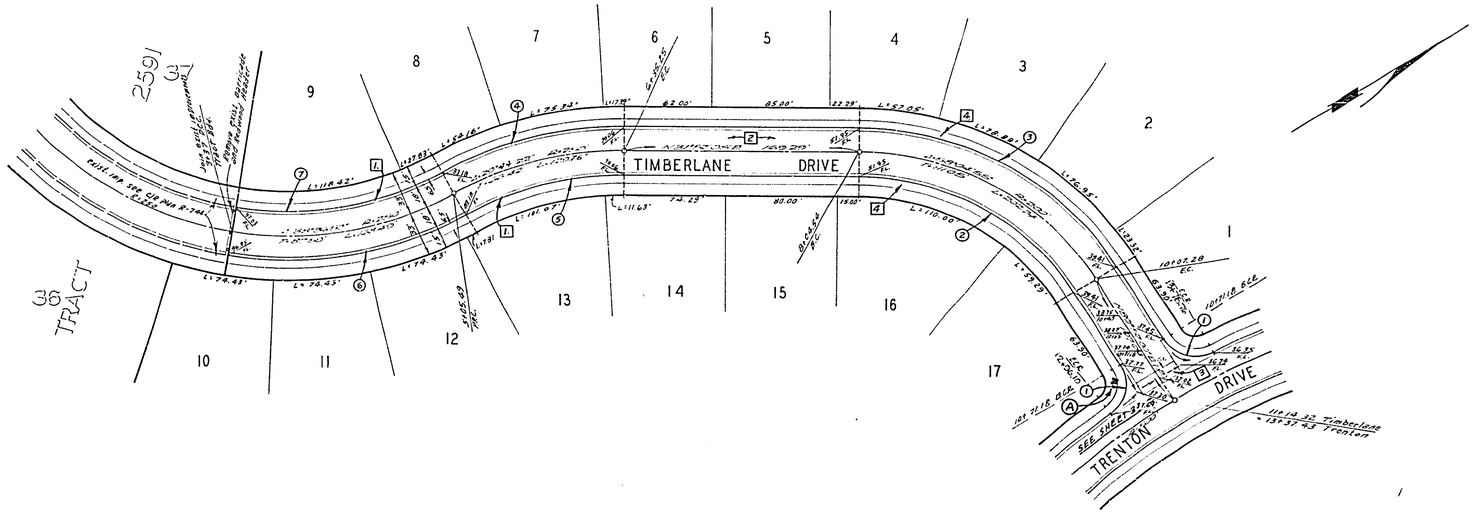

CURB CURVE DATA

NO.	Δ	R	T	L
1	85°15'49"	27'	24.86'	40.18'
2	58°04'55"	182'	101.05'	184.50'
3	58°04'55"	218'	121.04'	220.99'
4	29°44'22"	260'	71.16'	139.11'
5	29°44'22"	232'	61.60'	120.42'
6	38°36'57"	268'	93.89'	180.63'
7	38°36'57"	232'	81.28'	156.36'

BENCH MARK: Elev. 1107.66 P.K. nail and city tag on conc. base of light standard in ℄ median west side of intersection of Via Sotelo & Country Club Dr. City F.B. 864/35

ALBERT A. WEBB ASSOCIATES
CIVIL ENGINEERS
RIVERSIDE, CALIFORNIA
APPROVED BY Ernest N. Webb DATE 6/16/71
R.E. No. 9876
W.O. 68-258 FOR: HICKS & Bodrown F.B. 675/1014

MARK | REVISIONS | APPR. | DATE
DESIGNED BY DRB DRAWN BY BEL CHECKED BY BB

CITY OF RIVERSIDE, CALIFORNIA
PUBLIC WORKS DEPARTMENT

APPROVED BY	BY	DATE
PRINCIPAL ENGINEER		
PARK DEPARTMENT		
TRAFFIC DIVISION		
CHIEF PUB. WKS. ENGR.		

APPROVED BY
DIRECTOR OF PUBLIC WORKS
DATE

STREET PLAN AND PROFILE
TIMBERLANE DRIVE
TRACT NO. 3825
SCALE: Horiz. 1"=50' Vert. 1"=10'

ACCOUNT No.
DRAWING NUMBER
R-1520
SHEET 2 OF 9
68-258-A

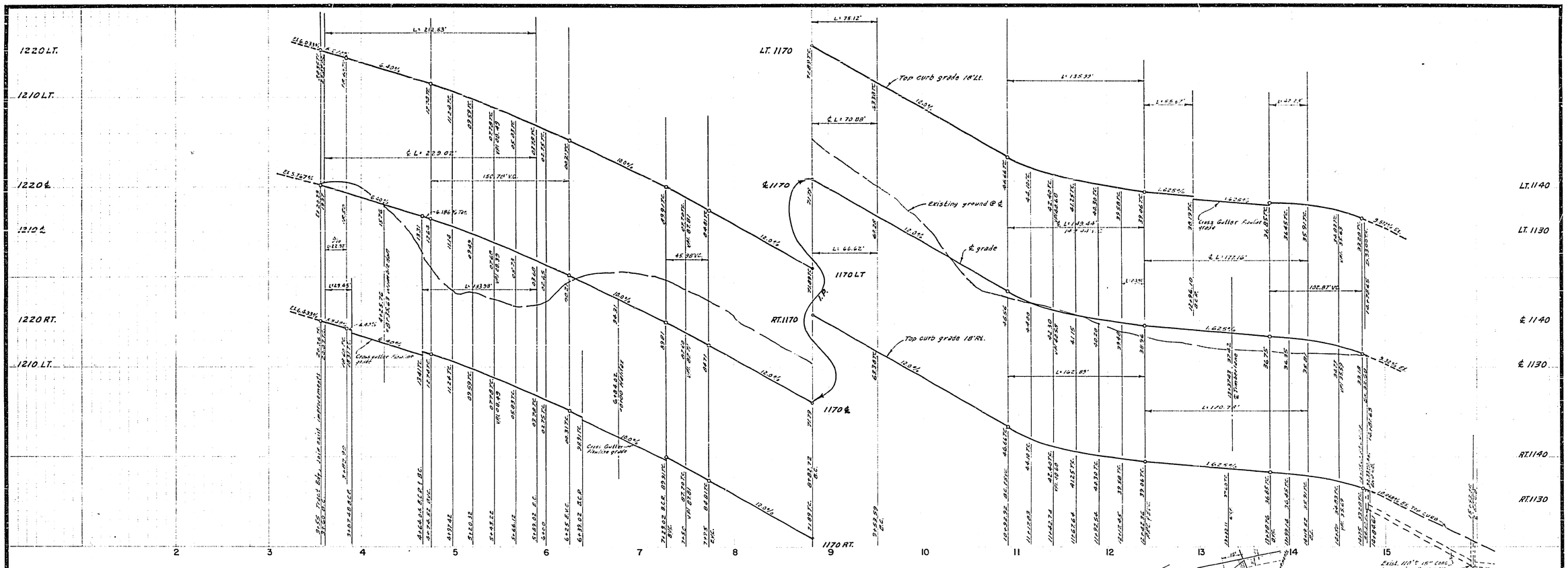

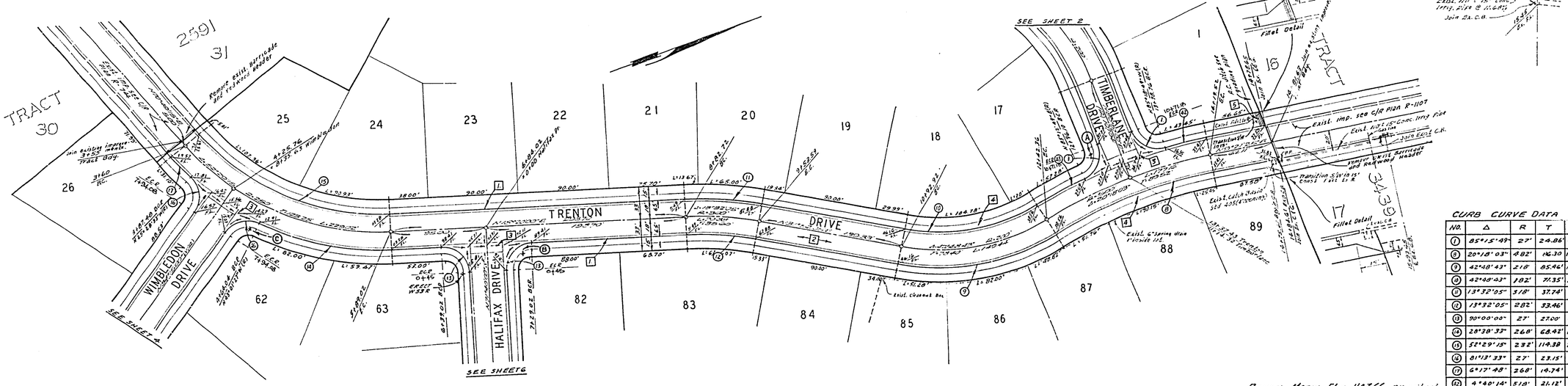

CURB CURVE DATA

NO.	Δ	R	T	L
1	85°15'49"	27'	24.86'	40.18'
8	20°18'03"	482'	86.30	170.78'
9	42°48'43"	218'	85.46'	162.89'
10	42°48'43"	182'	71.35'	135.99'
11	13°32'05"	318'	37.78'	75.12'
12	13°32'05"	282'	33.46'	66.62'
13	90°00'00"	27'	27.00'	42.41'
14	28°38'33"	268'	68.42'	137.98'
15	52°29'15"	232'	114.38	212.53'
16	81°12'33"	27'	23.15'	38.28'
17	6°17'48"	268'	14.74'	29.45'
18	4°40'14"	518'	21.12'	42.23'
19	6°09'28"	518'	27.86'	55.67'

BENCH MARK: Elev. 1127.66 P.K. nail and City tag on conc. base at East standard in a median west side of intersection of Via Zapata & Country Club Dr. City F.B. 864/35

APPROVAL FOR CONST. C.B. & 15" CONC. PIPE AT N. TRACT BDY.
DATE 3/2/71 — ENGINEER OF PUBLIC WORKS

ALBERT A. WEBB ASSOCIATES
CIVIL ENGINEERS
RIVERSIDE, CALIFORNIA
APPROVED BY [signature] DATE 5/6/71
R.E. No. 9476

MARK	REVISIONS	APPR.	DATE

W.O. 68-258 FOR: MAPS & CONST. DWG. — DATE 1-15-71
DESIGNED BY V.R.B. DRAWN BY J.C.H. CHECKED BY T.P.

CITY OF RIVERSIDE, CALIFORNIA
PUBLIC WORKS DEPARTMENT

APPROVED BY	BY	DATE
PRINCIPAL ENGINEER		
PARK DEPARTMENT		
TRAFFIC DIVISION		
CHIEF PUB. WKS. ENGR.		

APPROVED BY
DIRECTOR OF PUBLIC WORKS
DATE

STREET PLAN AND PROFILE
TRENTON DRIVE
TRACT NO. 3825

SCALE: Horiz. 1"=20' Vert. 1"=2'

ACCOUNT No.
DRAWING NUMBER
R-1520
SHEET 3 OF 9
68-258-A

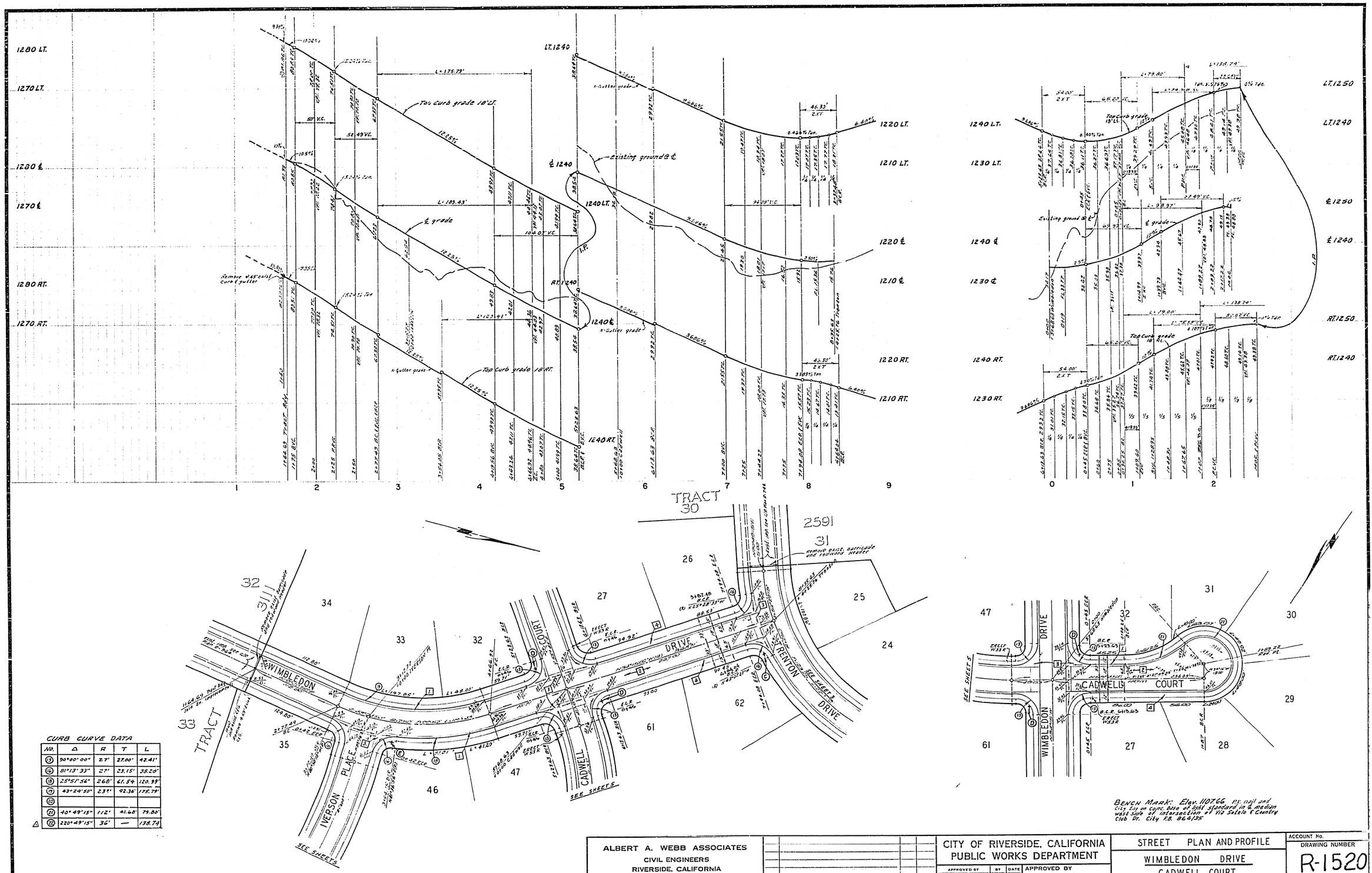

CURB CURVE DATA

NO.	Δ	R	T	L
13	90°00'00"	27'	27.00'	42.41'
16	81°13'33"	27'	23.15'	38.28'
18	25°51'56"	268'	61.54	120.99'
19	43°24'50"	237'	92.36'	175.79'
20				
21	40°49'15"	112'	41.68'	79.80'
△ 22	220°49'15"	36'	—	138.74

BENCH MARK: Elev. 1107.66 P.K. nail and City tag on conc. base of light standard in ℄ median west side of intersection of Via Sotelo & Country Club Dr. City F.B. 864/35

ALBERT A. WEBB ASSOCIATES
CIVIL ENGINEERS
RIVERSIDE, CALIFORNIA
APPROVED BY Ernest N. Webb DATE 6/16/71
R.E. NO.
W.O. 68-258 FOR: Hicks & Badroun F.B.

△ Corrected Data No. 66 10-22-71 Bel. MARK REVISIONS APPR. DATE
DESIGNED BY DRAWN BY CHECKED BY BB

CITY OF RIVERSIDE, CALIFORNIA
PUBLIC WORKS DEPARTMENT

APPROVED BY	BY	DATE
PRINCIPAL ENGINEER		
PARK DEPARTMENT		
TRAFFIC DIVISION		
CHIEF PUB. WKS. ENGR.		

APPROVED BY
DIRECTOR OF PUBLIC WORKS
DATE

STREET PLAN AND PROFILE
WIMBLEDON DRIVE
CADWELL COURT
TRACT NO. 3825
SCALE: Horiz. 1"=50' Vert. 1"=10'

ACCOUNT No.
DRAWING NUMBER
R-1520
SHEET 4 OF 9
68-258-A

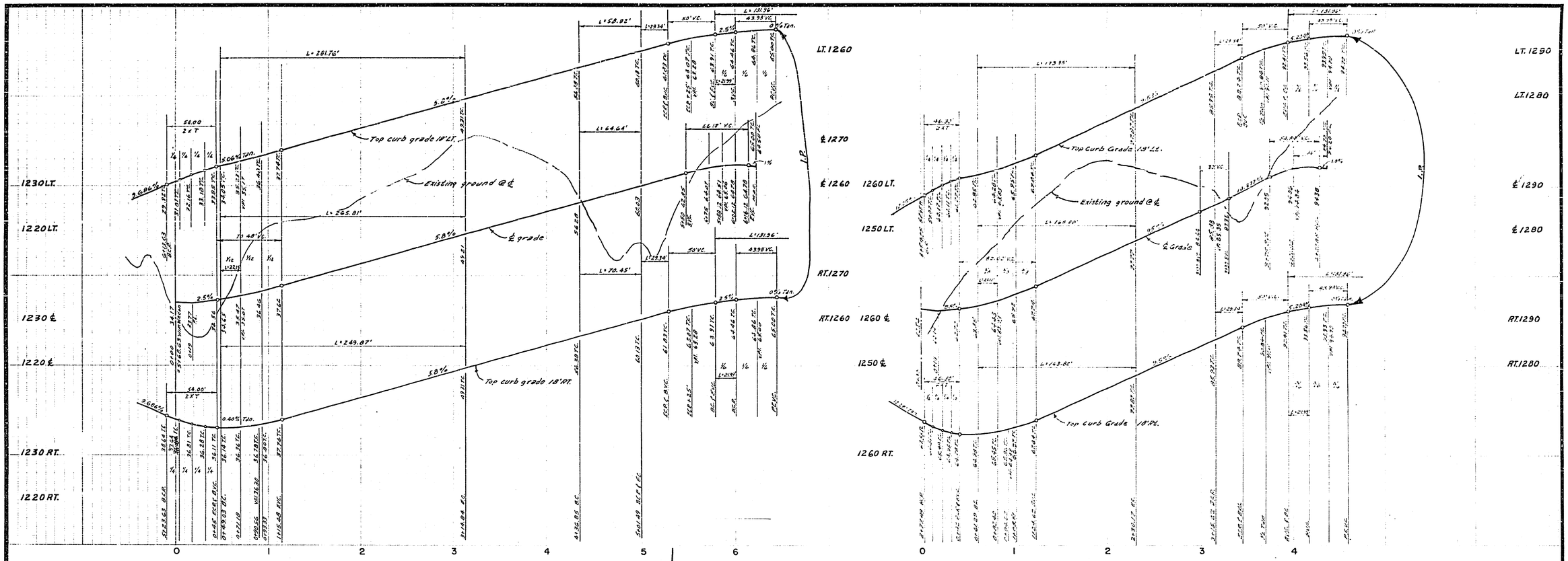

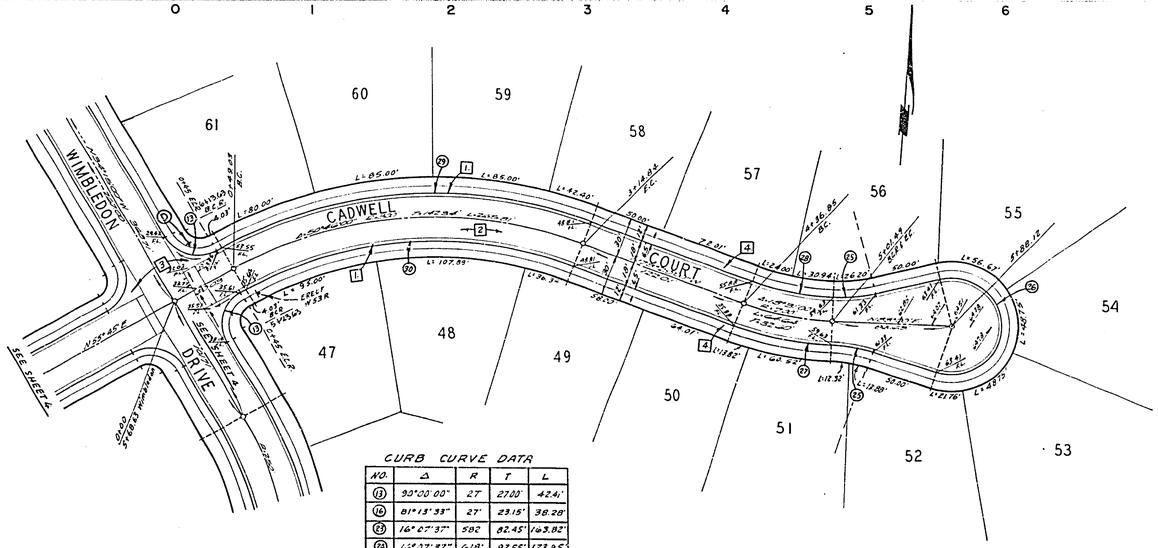

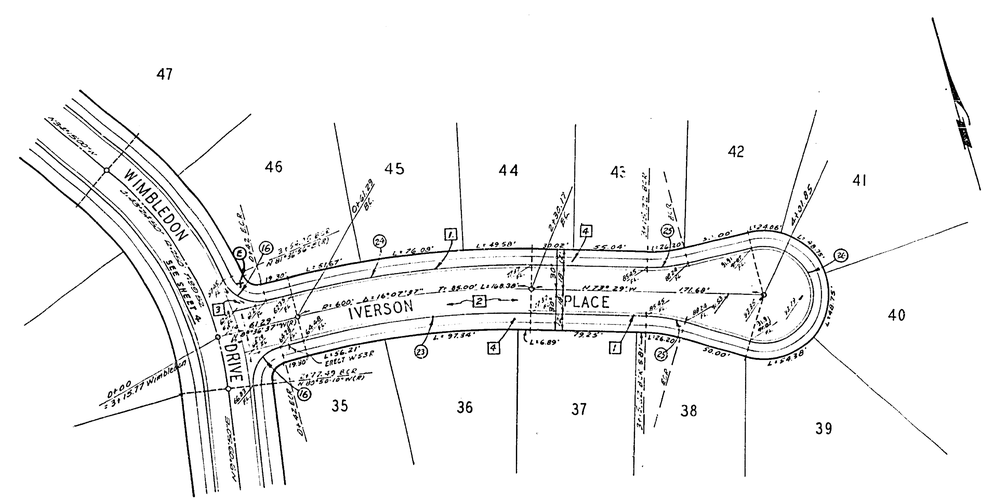

CURB CURVE DATA

NO.	Δ	R	T	L
13	90°00'00"	27'	27.00'	42.41'
16	81°13'33"	27'	23.15'	38.28'
23	16°07'37"	582	82.45'	163.82'
24	16°07'37"	618'	87.55'	173.95'
25	15°00'39"	112'	14.76'	29.34'
26	210°01'18"	36'	—	131.96'
27	18°31'00"	218'	35.54'	70.45'
28	18°31'00"	182'	29.67'	58.82'
29	50°46'00"	318'	150.88'	281.76'
30	50°46'00"	282'	133.80'	249.87'

BENCH MARK: Elev. 1107.66 P.K. nail and City tag on conc. base of light standard in ℄ median westside of intersection of Via Sotelo & Country Club Dr. City F.B. 864/35

ALBERT A. WEBB ASSOCIATES
CIVIL ENGINEERS
RIVERSIDE, CALIFORNIA
APPROVED BY Ernest N. Will DATE 6/16/71
R.E. No. 9876
W.O. 68-258 FOR: Hicks & Bodrow F.B.

MARK	REVISIONS	APPR.	DATE

DESIGNED BY ____ DRAWN BY ____ CHECKED BY ____

CITY OF RIVERSIDE, CALIFORNIA
PUBLIC WORKS DEPARTMENT

APPROVED BY	BY	DATE
PRINCIPAL ENGINEER		
PARK DEPARTMENT		
TRAFFIC DIVISION		
CHIEF PUB. WKR. ENGR.		

APPROVED BY
DIRECTOR OF PUBLIC WORKS
DATE

STREET PLAN AND PROFILE
CADWELL COURT
IVERSON PLACE
TRACT NO. 3825

SCALE: Horiz. 1"=50 Vert. 1"=10'

ACCOUNT No.
DRAWING NUMBER
R-1520
SHEET 5 OF 9
68-258-A

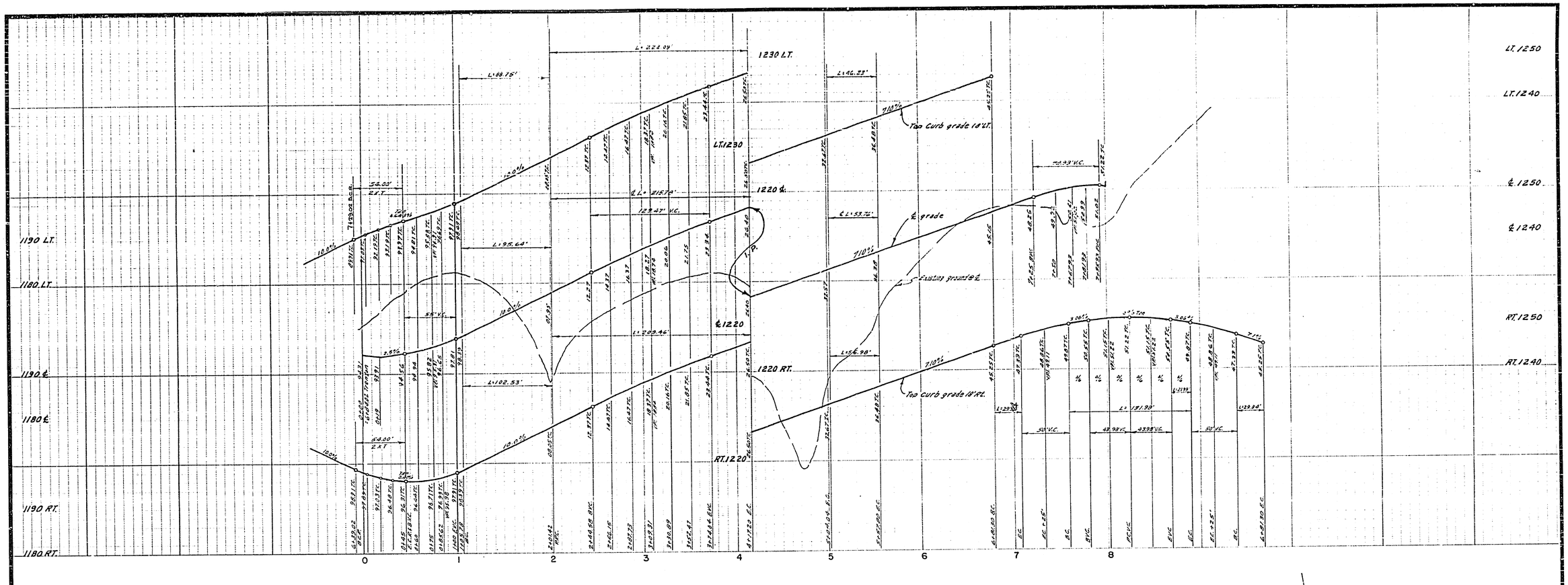

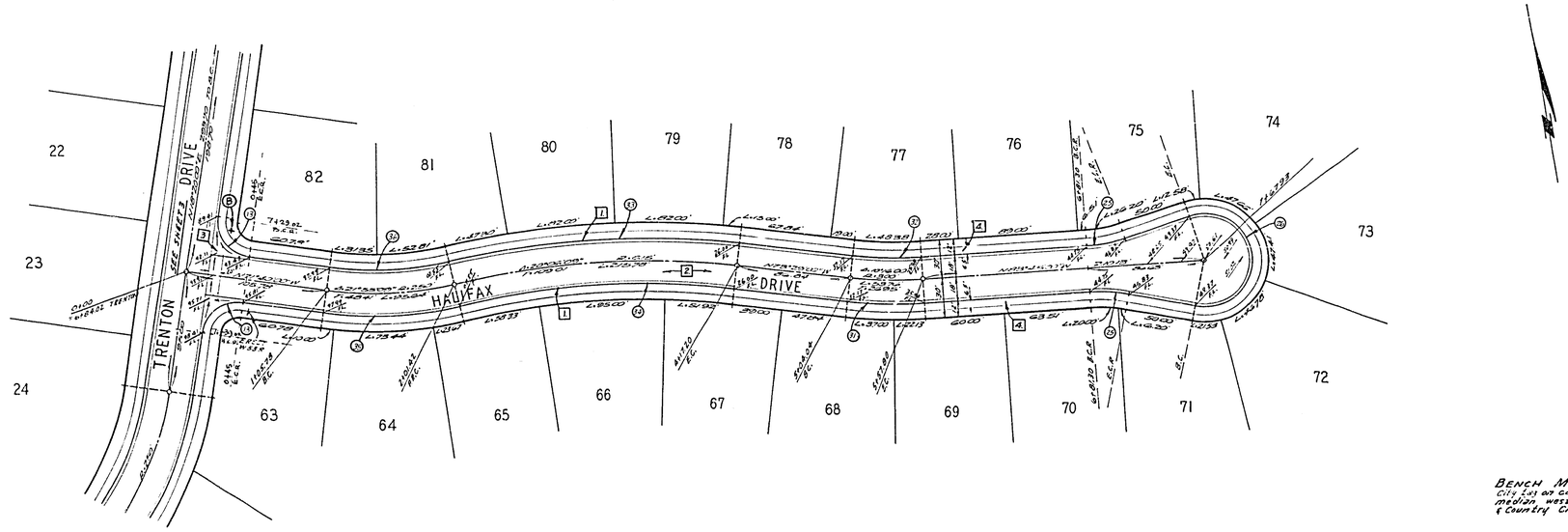

CURB CURVE DATA

NO.	Δ	R	T	L
13	90°00'00"	27'	27.00'	42.41'
25	15°00'39"	112'	14.76'	29.34'
26	210°01'18"	36'	134.25'	131.96'
31	10°16'00"	319'	28.57'	56.98'
32	10°16'00"	282'	25.33'	50.53'
33	20°06'09"	633'	112.20'	222.09'
34	20°06'09"	597'	105.82'	209.46'
35	21°55'09"	268'	51.90'	102.53'
36	21°55'09"	232'	44.93'	88.75'

BENCH MARK: Elev. 1107.66 P.K. nail and city tag on conc. base of light standard in ℄ median westside of intersection of Via Sotelo & Country Club Dr. City F.B. 864/35

ALBERT A. WEBB ASSOCIATES
CIVIL ENGINEERS
RIVERSIDE, CALIFORNIA
APPROVED BY [signature] DATE 6/16/71
R.E. NO. 0.876
W.O. 68-258 FOR: Hicks & Badrown F.B. 675/1014

DESIGNED BY D.R.B. DRAWN BY B.E.L. CHECKED BY GB

CITY OF RIVERSIDE, CALIFORNIA
PUBLIC WORKS DEPARTMENT

APPROVED BY	BY	DATE
PRINCIPAL ENGINEER		
PARK DEPARTMENT		
TRAFFIC DIVISION		
CHIEF PUB. WKS. ENGR.		

APPROVED BY
DIRECTOR OF PUBLIC WORKS
DATE

STREET PLAN AND PROFILE
HALIFAX DRIVE
TRACT NO. 3825
SCALE: Horiz. 1"=50' Vert. 1"=10'

ACCOUNT No.
DRAWING NUMBER
R-1520
SHEET 6 OF 9
68-258-A

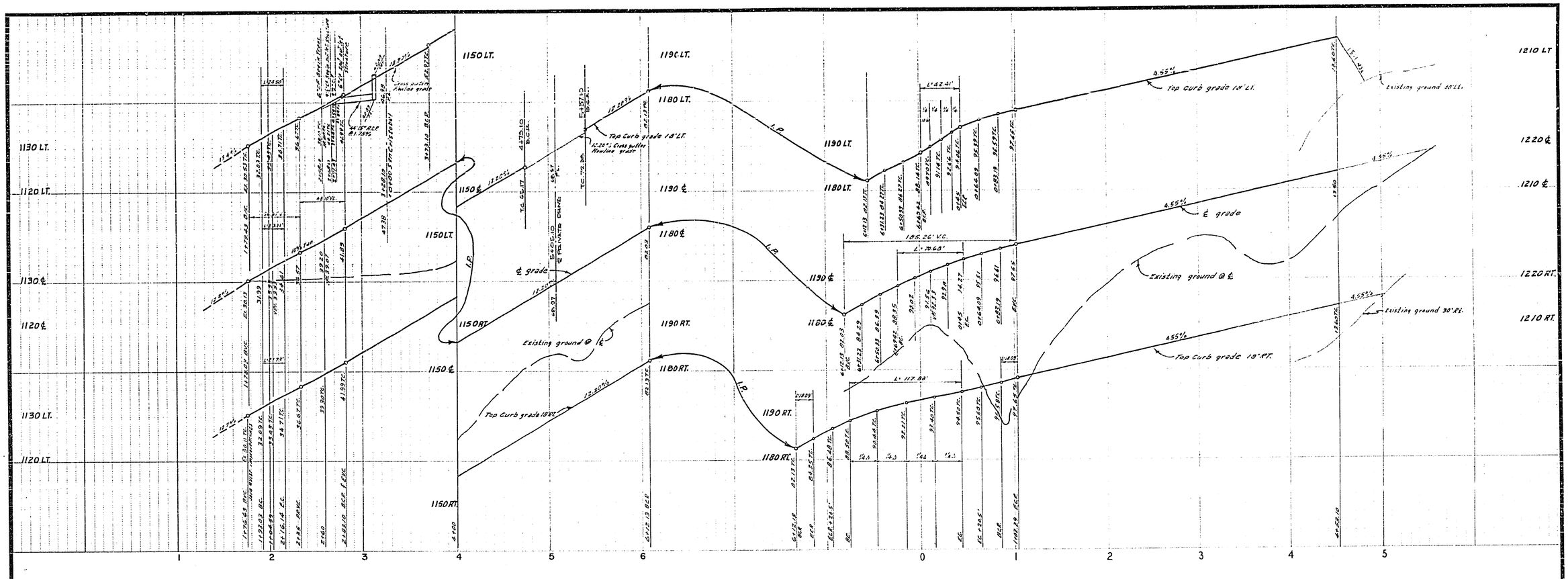

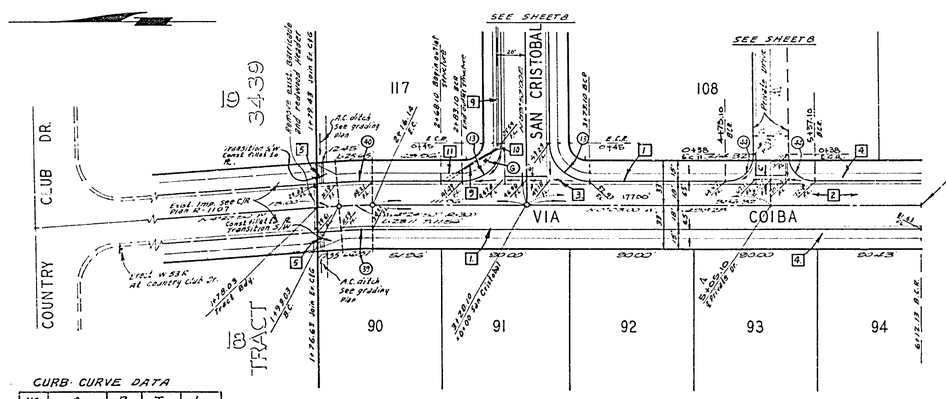

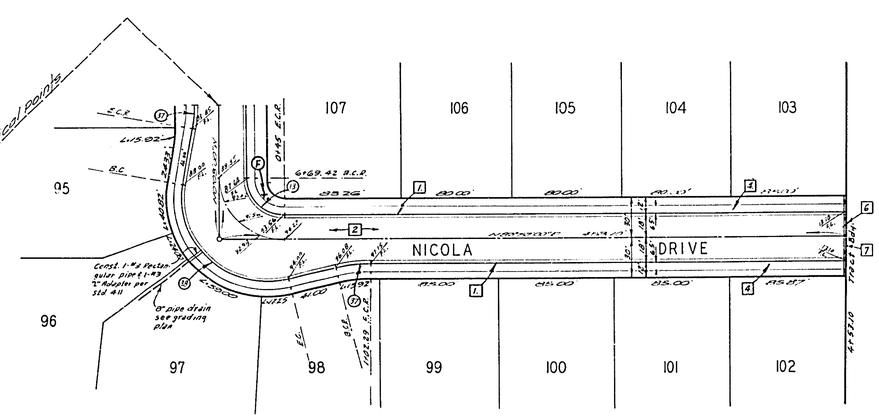

CURB CURVE DATA

NO.	Δ	R	T	L
13	30°00'00"	27'	27.00'	42.41'
17	10°21'43"	100'	9.07'	18.09'
18	110°43'26"	61'	88.30'	117.88'
39	4°24'50"	282'	10.87'	21.72'
40	4°24'50"	318'	12.26'	24.50'
44	90°00'00"	20'	20.00	31.42'

BENCH MARK: Elev. 1107.66 [illegible] on conc. base of light standard in ℄ median westside of intersection of Via Sotelo & Country Club Dr. City F.B. 864/35.

ALBERT A. WEBB ASSOCIATES
CIVIL ENGINEERS
RIVERSIDE, CALIFORNIA

APPROVED BY [signature] DATE [illegible]
R.E. No. 9876
W.O. 68-258 FOR: HICKS & Bodrow F.B.

MARK	REVISIONS	APPR.	DATE
1	[illegible]	[illegible]	[illegible]

DESIGNED BY ____ DRAWN BY ____ CHECKED BY GG

CITY OF RIVERSIDE, CALIFORNIA
PUBLIC WORKS DEPARTMENT

APPROVED BY	BY	DATE
PRINCIPAL ENGINEER		
PARK DEPARTMENT		
TRAFFIC DIVISION		
CHIEF PUB. WKS. ENGR.		

APPROVED BY
DIRECTOR OF PUBLIC WORKS
DATE

STREET PLAN AND PROFILE
VIA COIBA
NICOLA DRIVE
TRACT NO. 3825

SCALE: Horiz. 1"=50' Vert. 1"=10'

ACCOUNT No.
DRAWING NUMBER
R-1520
SHEET 7 OF 9
68-258-A

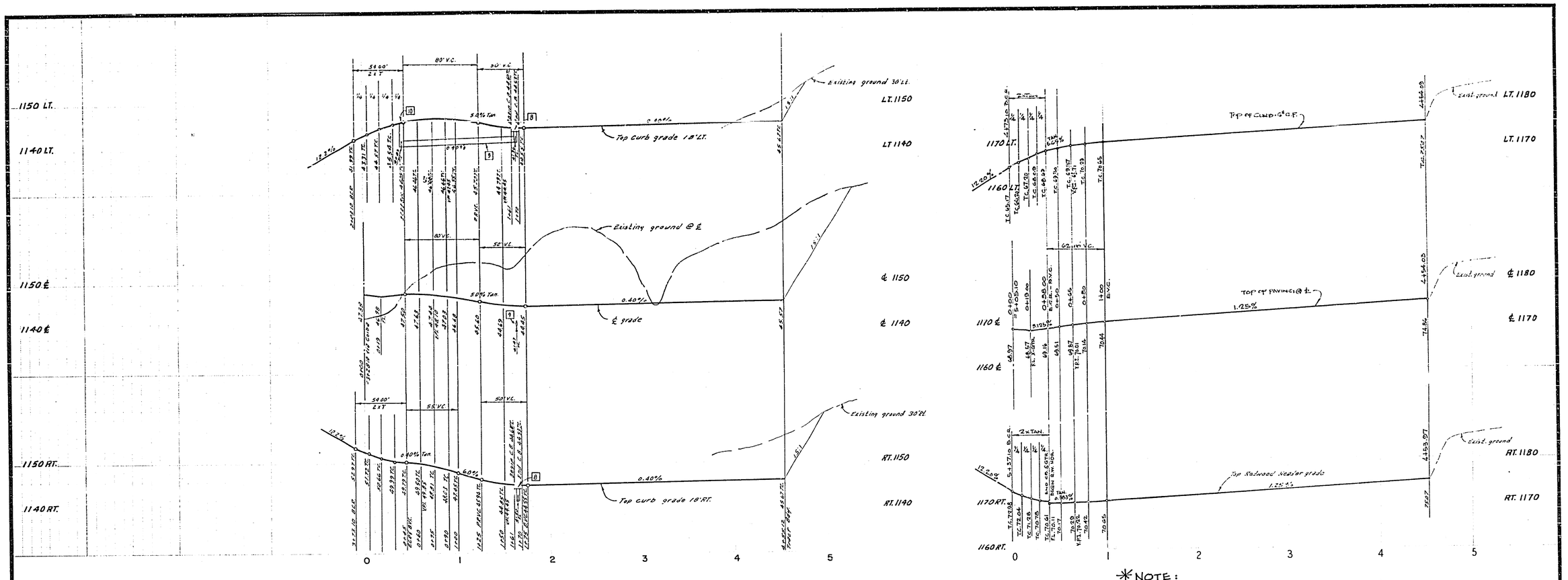

✳ NOTE:
SEE REVISED TYPICAL SECTION ON SHT. 1 FOR PRIVATE DRIVE.

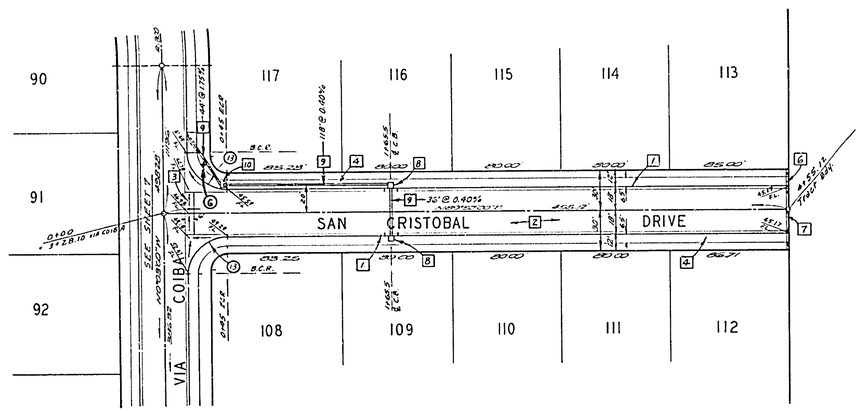

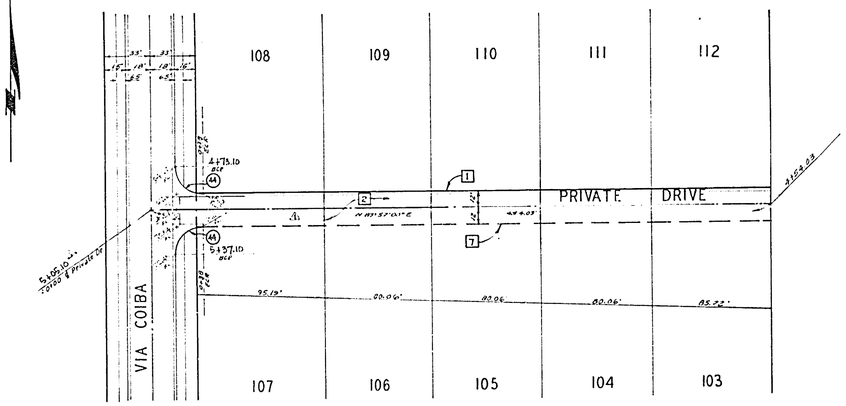

CURB CURVE DATA

No.	Δ	R	T	L
13	93°03'00"	27'	27.00'	42.41'
44	30°00'00"	20'	20.00'	11.42'

BENCH MARK: Elev. 1107.66 Recorded City T.B.M. on conc. base of light standard on N. median, West side of intersection of Via Sotelo & Country Club Dr. City F.B. 864/135

ALBERT A. WEBB ASSOCIATES
CIVIL ENGINEERS
RIVERSIDE, CALIFORNIA
AUTHORIZED BY D. G. N. L. DO DATE 1/16/71
R.E. No. 2876
W.O. 2829 FOR: Nickel & Backoun F.B.

MARK	REVISIONS	APPR.	DATE
1	ADD TYPICAL SECT. (PRIVATE DRIVE)		
2	ADD TYPICAL SECT. (SHT. 1)		

DESIGNED BY ____ DRAWN BY ____ CHECKED BY ____

CITY OF RIVERSIDE, CALIFORNIA
PUBLIC WORKS DEPARTMENT

APPROVED BY	BY	DATE
PRINCIPAL ENGINEER		
PARK DEPARTMENT		
TRAFFIC DIVISION		
CHIEF PUB. WKS ENGR.		

APPROVED BY
DIRECTOR OF PUBLIC WORKS
DATE

STREET PLAN AND PROFILE
SAN CRISTOBAL
PRIVATE DRIVE
TRACT NO. 3825

SCALE: Horiz 1"=50' Vert 1"=10'

ACCOUNT No.
DRAWING NUMBER
R-1520
SHEET 8 OF 9
68-258-A

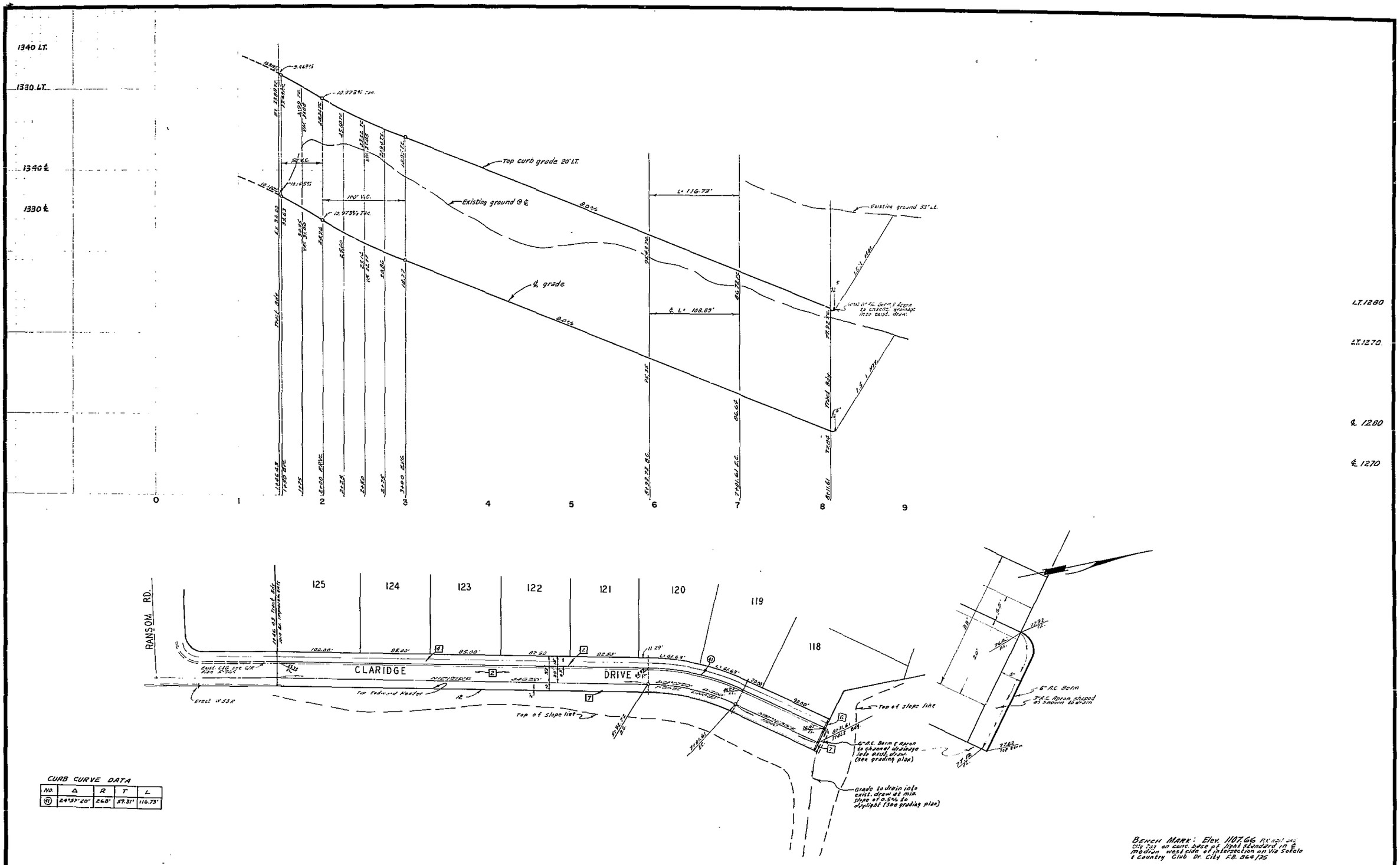

CURB CURVE DATA

NO.	Δ	R	T	L
(11)	24°57'20"	268'	59.31'	116.73'

BENCH MARK: Elev. 1107.66 (P.B. 20/20) City TBM on conc. base at light standard in ℄ median west side of intersection on Via Sotelo & Country Club Dr. City F.B. 864/35

ALBERT A. WEBB ASSOCIATES CIVIL ENGINEERS RIVERSIDE, CALIFORNIA APPROVED BY Ernest N. Webb DATE 6/16/71 R.E. No. 2-[illegible] W.O. 68-258 FOR: NICKS & BOOTSON F.B.	MARK / REVISIONS / APPR. / DATE DESIGNED BY ____ DRAWN BY ____ CHECKED BY ____	CITY OF RIVERSIDE, CALIFORNIA PUBLIC WORKS DEPARTMENT APPROVED BY / BY / DATE PRINCIPAL ENGINEER / [illegible] / [illegible] PARK DEPARTMENT / — / — TRAFFIC DIVISION / [illegible] / [illegible] CHIEF PUB. WKS. ENGR. / [illegible] / [illegible]	APPROVED BY DIRECTOR OF PUBLIC WORKS DATE ____	STREET PLAN AND PROFILE CLARIDGE DRIVE TRACT NO. 3825 SCALE: Horiz. 1"=20' Vert. 1"=10'	ACCOUNT No. DRAWING NUMBER R-1520 SHEET 9 OF 9 68-258-A