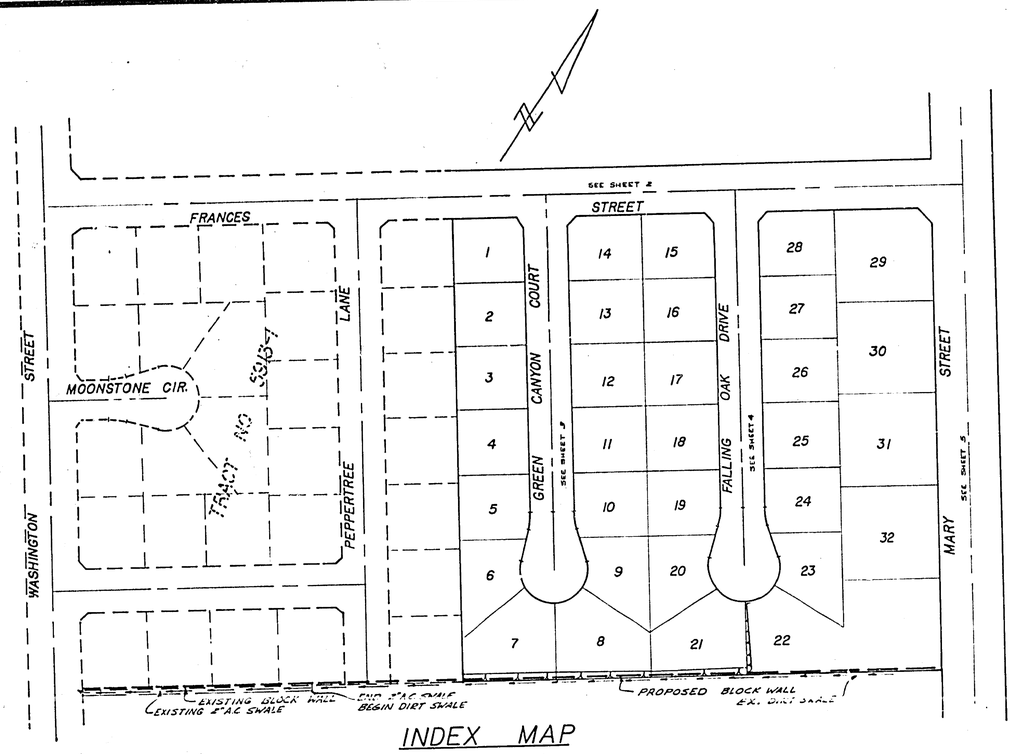

INDEX MAP

SCALE 1" 100'

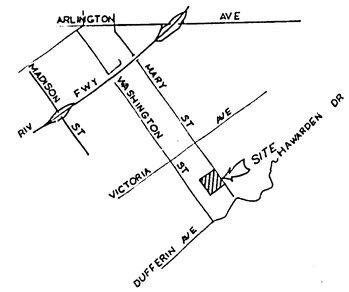

LOCATION MAP

NO SCALE

STREET NAME & TRAFFIC SIGN SCHEDULE		
(A)	FRANCES ST	7000
	GREEN CANYON CT	2400
(B)	FRANCES ST	7000
	FALLING OAK DR.	2400
(C)	FRANCES ST	7000
	MARY ST	2400
(D)	R1 (STOP SIGN) 30" OCTAGON	
(E)	W53 (NOT A THROUGH STREET) 24"x24"	

CONSTRUCTION NOTES

1. Construct Standard 200 Curb & Gutter - 6" C.F.
3. Construct Standard 325 Curb Line Sidewalk
4. Construct Standard 220 Cross Gutter. (Width shown on plans)
5. Construct 2½" A.C. paving over 5½" D.G.B. or A.C. paving over compacted native
6. Construct 3" A.C. paving over 6" D.G.B. or A.C. paving over compacted native
7. Construct Standard 304 Wheelchair Ramp
8. Construct 2"x4" Redwood Header

GENERAL NOTES

1. Construction shall be in accordance with the Standard Specifications for Public Works construction 1976 Edition and per City of Riverside Standard Drawings.
2. All flagged elevations shall be staked in the field by the Engineer.
3. The subdivider shall arrange for a soil test to be made by a Soils Engineer after the streets have been prepared to rough grade. Depth of base material and A.C. pavement shall be determined by the City of Riverside design standards and test procedures.
4. Location & size of driveway approaches (Std 302) to be determined at the time of construction as approved by the Traffic Engineer.
5. Curb & Gutter to be staked on 3' offset at 25' intervals.
6. Traffic control signs must be in place prior to opening streets to traffic.
7. Trim edge of existing pavement where new pavement joins to a smooth straight line. Construct match-up paving as shown on the plans and overlay paving as directed in the field to provide a smooth surface. Engineer estimates overlay to be 51 Tons
8. See Electrical Plan prepared by the City of Riverside Public Utilities Department for number and location of required street lights.
9. It shall be the responsibility of the contractor to clear the right of way in accordance with the provisions of law as it affects each utility including irrigation lines and appurtenances, and at no cost to the City.
10. 4"x4" Blockouts for mail boxes required in Curb Line Sidewalk

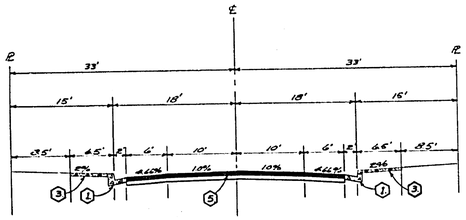

TYPICAL SECTION
GREEN CANYON COURT
FALLING OAK DRIVE

NO SCALE

T.I.=5

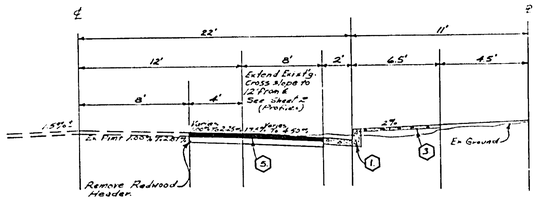

TYPICAL SECTION
FRANCES STREET

STA. 6+05.90 TO STA. 6+80.13

NO SCALE

T.I.=5

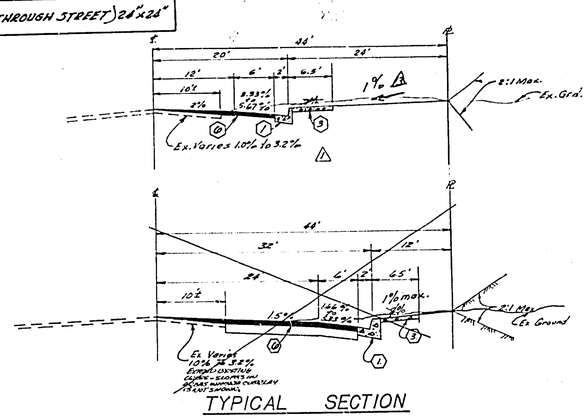

TYPICAL SECTION
MARY STREET

NO SCALE

T.I.=6

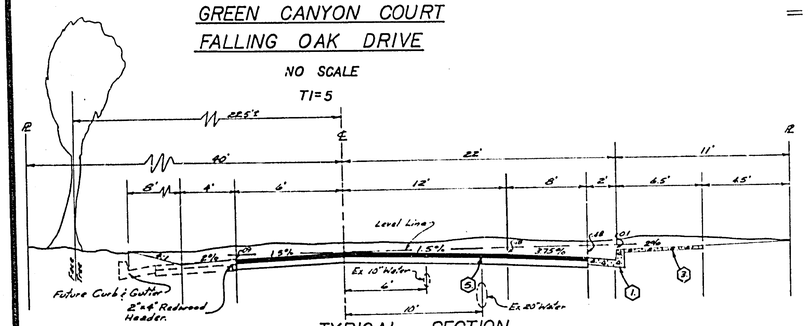

TYPICAL SECTION
FRANCES STREET

STA 6+80.13
TO
STA 12+93.33

NO SCALE T.I.=5

BENCH MARK G6-B ELEV = 944.502

BRASS DISK DOWN 8" IN CAPPED WELL AT INTERSECTION OF MARY STREET & VICTORIA AVENUE.

SR 025 R-38

*AS BUILT 8-77 KPT

INDEXED HD

ALBERT A. WEBB ASSOCIATES
CIVIL ENGINEERS
RIVERSIDE, CALIFORNIA
APPROVED BY Ernest H. Wells DATE 7/12/76
R.E. No. 9876
W.O. 74-44 FOR: Country Wood Estates F.B. 1035

MARK	REVISIONS	APPR.	DATE
3	Parkway Slope Restored on Mary St.	EHW	5/20/77
2	Added paving section		5-15-77
1	Revised Mary St. Section & Ex. Grd.	EHW	10/27/76

DESIGNED BY REC DRAWN BY L.R.M. CHECKED BY

CITY OF RIVERSIDE, CALIFORNIA
PUBLIC WORKS DEPARTMENT

APPROVED BY	BY	DATE
PRINCIPAL ENGINEER		11/5
PARK DEPARTMENT		11-2
TRAFFIC DIVISION		11-2
CHIEF PUB. WKS ENGR.		11-2

APPROVED BY William B. Hardin
DIRECTOR OF PUBLIC WORKS
DATE 11/8/76

STREET PLAN & PROFILE
TRACT NO 5913
INDEX SHEET

SCALE AS SHOWN

ACCOUNT No.

DRAWING NUMBER R-1915

SHEET 1 OF 5

74-44-1

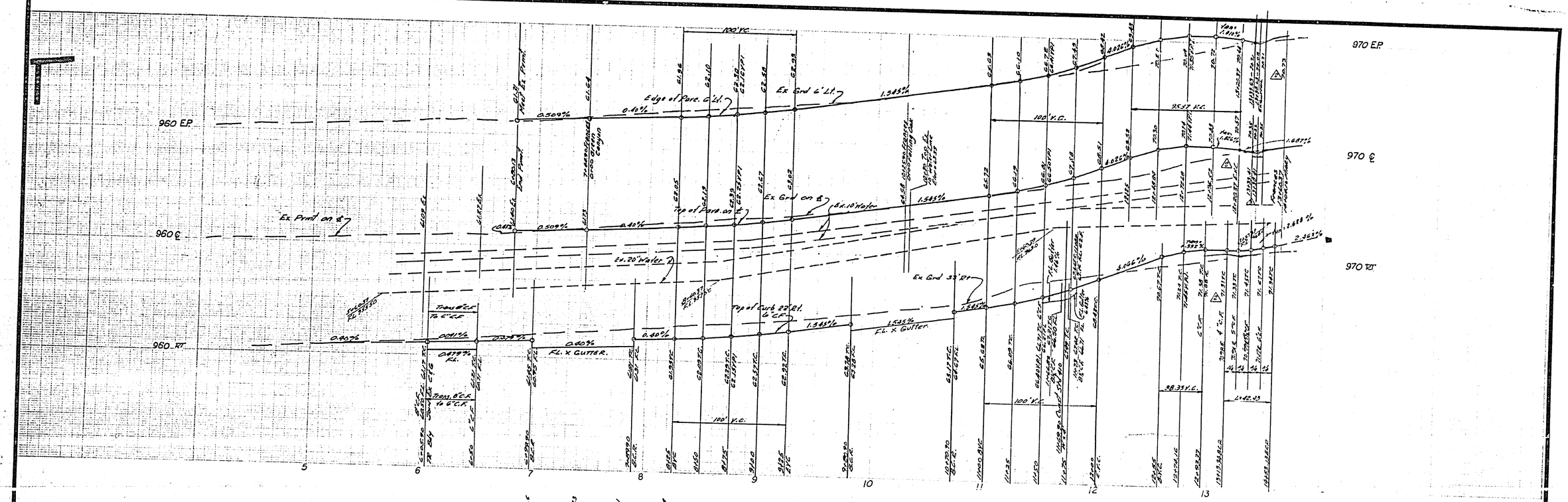

SEE SHEET NO 1 FOR GENERAL AND CONSTRUCTION NOTES.

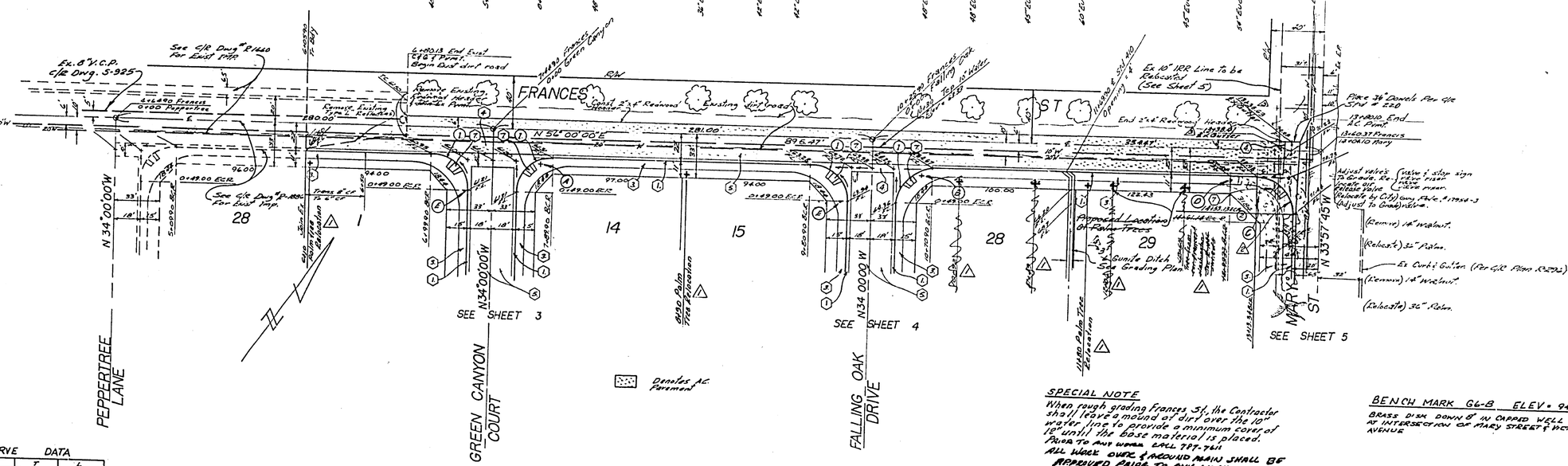

CURB CURVE DATA

NO	Δ	R	T	L
1	90°00'00"	27	27.00	42.41
2	90°02'15"	27	27.02	42.43

SPECIAL NOTE

When rough grading Frances St. the Contractor shall leave a mound of dirt over the 10" water line to provide a minimum cover of 18" until the base material is placed.
PHONE TO ANY WORK CALL 787-7611
ALL WORK OVER & AROUND MAIN SHALL BE APPROVED PRIOR TO ANY WORK

BENCH MARK G6-B ELEV. = 944.502
BRASS DISK DOWN 8' IN CAPPED WELL AT INTERSECTION OF MARY STREET & VICTORIA AVENUE

ALBERT A. WEBB ASSOCIATES
CIVIL ENGINEERS
RIVERSIDE, CALIFORNIA
APPROVED BY Robert H. Webb DATE 7/12/76
R.E. No. 9876
W.O. 74-44 FOR: Country Wood Estates F.B. 1035

MARK	REVISIONS	BY	APPR.	DATE
4	Revised width of sidewalk, SHALE GUTTER, etc.	ENW	RHW	7/27/76
3	Revised Water & Sewer Alignment, Revised Improvements to Intersection	ENW	RHW	8/27/76
2	Revised Sewer & Storm Drain Alignment & Profile	ENW	RHW	10/18/76
1	Relocation of Palm trees caused	WLS	WLS	11-30

DESIGNED BY REC DRAWN BY LRM CHECKED BY

Approved by Subject to Note
Chief Utilities Engineer-Water 8-20-76 Date

CITY OF RIVERSIDE, CALIFORNIA
PUBLIC WORKS DEPARTMENT

APPROVED BY	BY	DATE
PRINCIPAL ENGINEER	RPD	11/5
PARK DEPARTMENT	RD	11-4
TRAFFIC DIVISION		
CHIEF PUB. WKS. ENGR.		

APPROVED BY William D. Sanders
DIRECTOR OF PUBLIC WORKS
DATE 11/8/76

AS BUILT 8-77 KAT

STREET PLAN & PROFILE
TRACT NO 5913
FRANCES STREET

ACCOUNT No.
DRAWING NUMBER R-1915
SHEET 2 OF 5
SCALE: HORIZ 1"=40' VERT 1"=8'
74-44-A

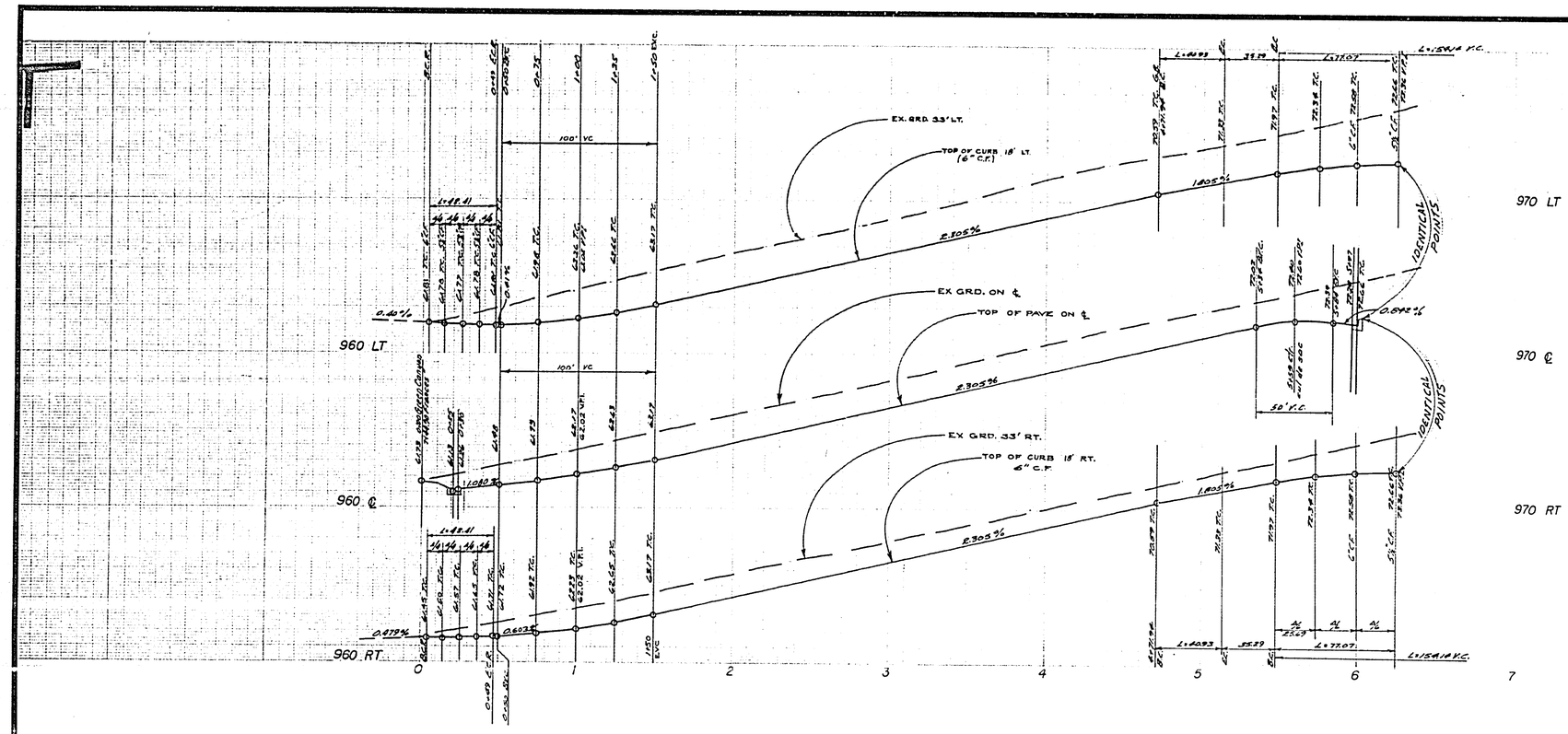

SEE SHEET NO 1 FOR GENERAL AND CONSTRUCTION NOTES.

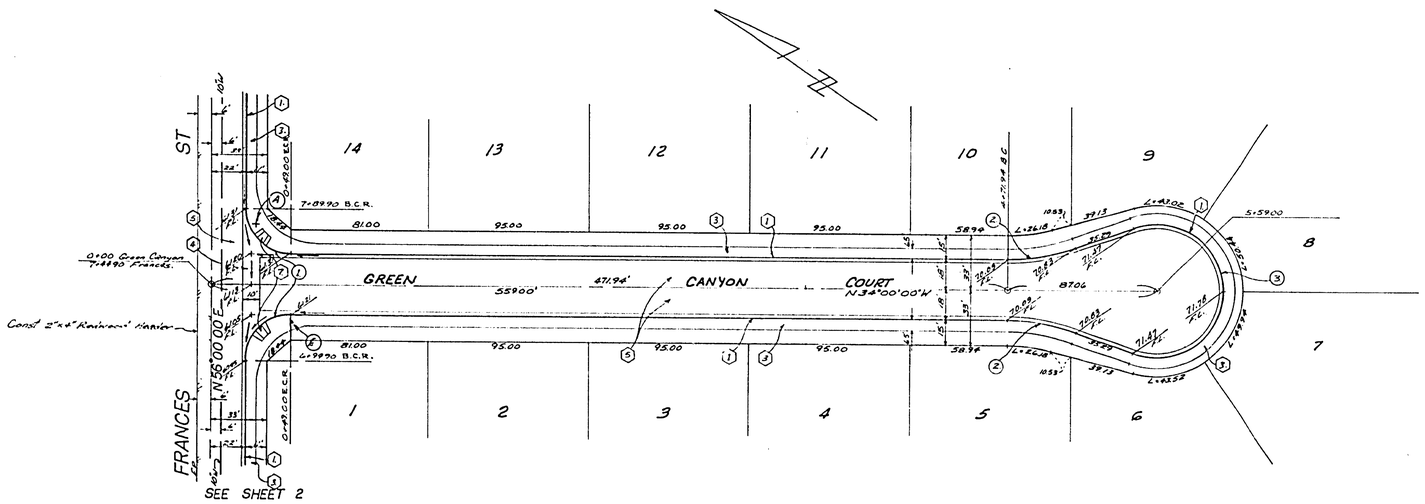

BENCH MARK G6-B ELEV = 944.502
BRASS DISK DOWN 8" IN CAPPED WELL AT INTERSECTION OF MARY STREET & VICTORIA AVENUE.

CURB CURVE DATA

NO	Δ	R	T	L
1	90°00'00"	27'	27.00'	42.41'
2.	20°23'27"	115'	20.68'	40.93'
3	220°46'54"	40'	51.55'	154.14'

ALBERT A. WEBB ASSOCIATES
CIVIL ENGINEERS
RIVERSIDE, CALIFORNIA
APPROVED BY Ernest N. Webb DATE 7/12/76
R.E. No. 2876
W.O. 74-44 FOR: County Wood Estates F.B. 1035

MARK	REVISIONS	APPR.	DATE

DESIGNED BY REC DRAWN BY LRM CHECKED BY

CITY OF RIVERSIDE, CALIFORNIA
PUBLIC WORKS DEPARTMENT

APPROVED BY	BY	DATE
PRINCIPAL ENGINEER		11/15
PARK DEPARTMENT		
TRAFFIC DIVISION		
CHIEF PUB. WKS ENGR.		

APPROVED BY William D. Hardman
DIRECTOR OF PUBLIC WORKS
DATE 11/8/76

*AS BUILT 8-77 KRT

STREET PLAN & PROFILE
TRACT NO 5913
GREEN CANYON CT.

SCALE: HORIZ 1"=40' VERT 1"=4'

ACCOUNT No.
DRAWING NUMBER R-1915
SHEET 3 OF 5
74-44-A

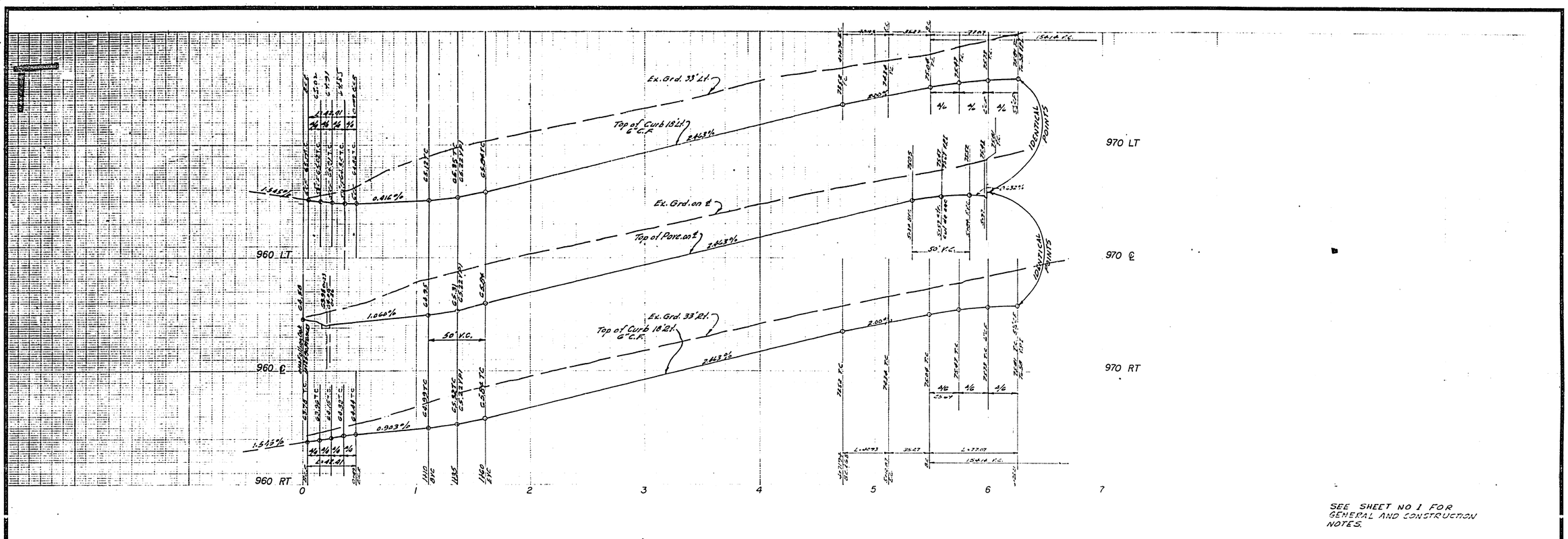

SEE SHEET NO 1 FOR GENERAL AND CONSTRUCTION NOTES.

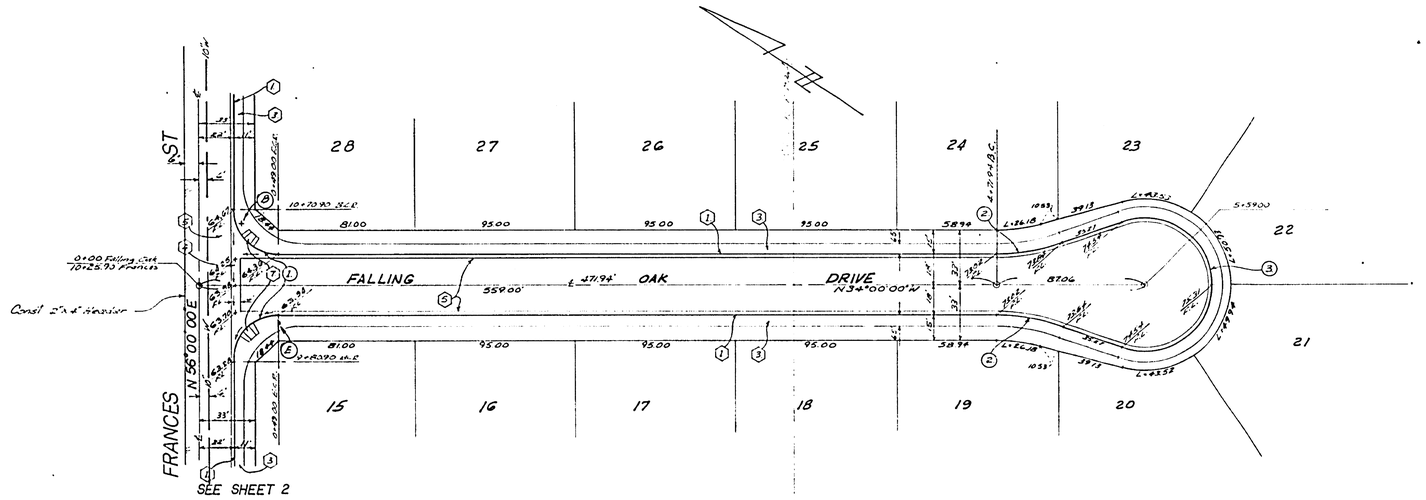

BENCH MARK G6-8 ELEV = 944.502
BRASS DISK DOWN 8" IN CAPPED WELL AT INTERSECTION OF MARY STREET & VICTORIA AVENUE.

CURB CURVE DATA

NO	Δ	R	T	L
1	90°00'00"	27'	27.00'	42.41'
2	20°23'27"	115'	20.68'	40.93'
3	220°46'54"	40'	57.54'	154.18'

*AS BUILT 8-77 KPT

ALBERT A. WEBB ASSOCIATES
CIVIL ENGINEERS
RIVERSIDE, CALIFORNIA
APPROVED BY [signature] DATE 7/12/76
R.E. No. 2876
W.O. 74-44 FOR: County Wood Estates F.B. 1035

MARK | REVISIONS | APPR. | DATE
DESIGNED BY REC DRAWN BY LRM CHECKED BY [illegible]

CITY OF RIVERSIDE, CALIFORNIA
PUBLIC WORKS DEPARTMENT

APPROVED BY	BY	DATE
PRINCIPAL ENGINEER	[illegible]	7/75
PARK DEPARTMENT		
TRAFFIC DIVISION		
CHIEF PUB. WKS. ENGR.		

APPROVED BY [signature] DIRECTOR OF PUBLIC WORKS
DATE 11/8/76

STREET PLAN & PROFILE
TRACT NO 5913
FALLING OAK DR.

SCALE: HORIZ. 1"=40' VERT 1"=4'

ACCOUNT No.
DRAWING NUMBER R-1915
SHEET 4 OF 5
74-44-A

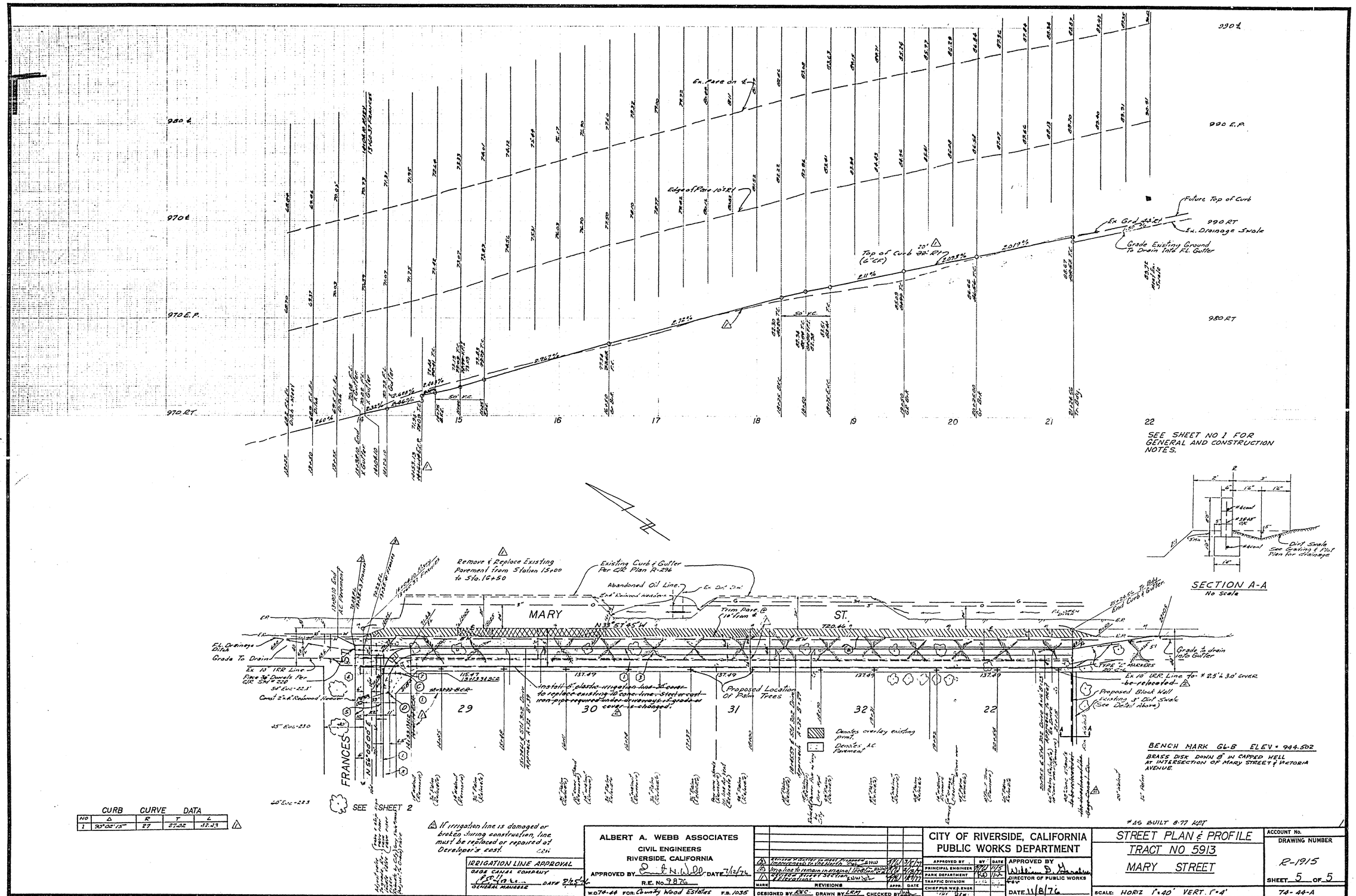

CURB CURVE DATA

NO	Δ	R	T	L
1	90°00'15"	27	27.02	42.43

△ If irrigation line is damaged or broken during construction, line must be replaced or repaired at Developer's cost.

IRRIGATION LINE APPROVAL
Gage Canal Company
Date 7/25/74
General Manager

ALBERT A. WEBB ASSOCIATES
CIVIL ENGINEERS
RIVERSIDE, CALIFORNIA
APPROVED BY Robert N. Webb DATE 7/12/74
R.E. No. 9876
W.O. 74-44 FOR: County Wood Estates F.B. 1035

MARK	REVISIONS	APPR.	DATE
△	Revised alignment for Mary St. (EWJ)		7/8/74
△	Incorporated to the North Side (EWJ)		7/8/74
△	Irrig. line to remain in original location (EWJ)		8/26/74
△	Revised Street Section & Elevations (EWJ)		10/31/74

DESIGNED BY EEC DRAWN BY LRM CHECKED BY

CITY OF RIVERSIDE, CALIFORNIA
PUBLIC WORKS DEPARTMENT

APPROVED BY	BY	DATE
PRINCIPAL ENGINEER		11/5
PARK DEPARTMENT		11/7
TRAFFIC DIVISION		
CHIEF PUB. WKS. ENGR.		

APPROVED BY William D. Thornton
DIRECTOR OF PUBLIC WORKS
DATE 11/8/76

STREET PLAN & PROFILE
TRACT NO 5913
MARY STREET

SCALE: HORIZ 1"=40' VERT. 1"=4'

ACCOUNT No.
DRAWING NUMBER R-1915
SHEET 5 OF 5
74-44-A