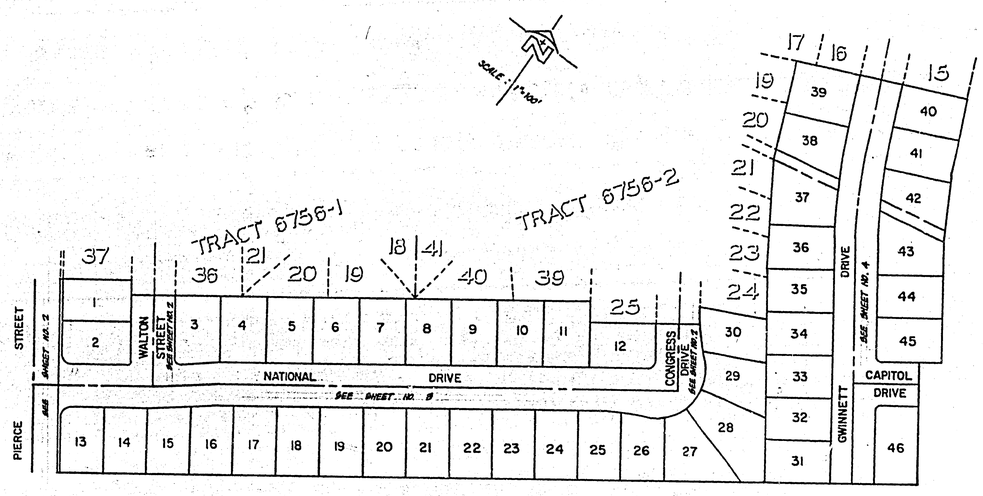

INDEX MAP
SCALE: 1"=100'

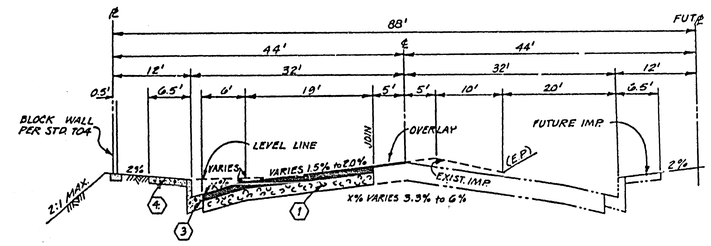

TYPICAL SECTION
PIERCE STREET
T.I.=7
SCALE: 1"=10'

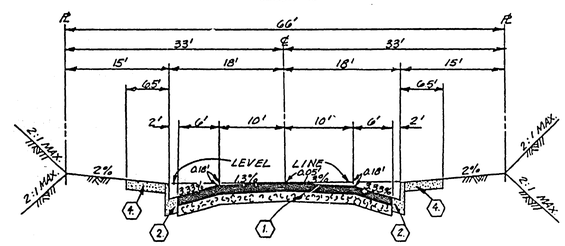

TYPICAL SECTION
CONGRESS DRIVE
GWINNETT DRIVE
WALTON STREET
NATIONAL DRIVE
T.I.=5
SCALE: 1"=10'

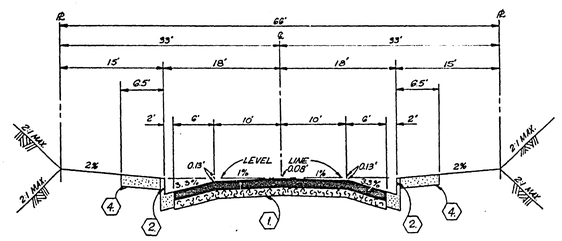

TYPICAL SECTION
CAPTOL DRIVE
T.I. =5
NO SCALE

GENERAL NOTES:

1. IT SHALL BE THE RESPONSIBILITY OF THE CONTRACTOR TO CLEAR THE RIGHT OF WAY IN ACCORDANCE WITH THE PROVISIONS OF LAW AS IT AFFECTS EACH UTILITY INCLUDING IRRIGATION LINES, AND AT NO COST TO THE CITY.
2. CONSTRUCTION SHALL BE IN ACCORDANCE WITH THE CITY OF RIVERSIDE, DEPARTMENT OF PUBLIC WORKS, STANDARD DRAWINGS AND SPECIFICATIONS FOR PUBLIC WORKS CONSTRUCTION, 1976 EDITION.
3. PRIME COAT, SEAL COAT, AND PAINT BINDER ARE REQUIRED.
4. CURB AND GUTTER SHALL BE STAKED WITH 3.0 FOOT OFF-SETS AT 25.0 FOOT INTERVALS AND AT ALL FLAGGED ELEVATIONS SHOWN ON PLANS.
5. NOTICE TO CONTRACTOR: THE EXISTENCE AND LOCATION OF ANY UNDERGROUND UTILITY PIPES OR STRUCTURES SHOWN ON THESE PLANS WERE OBTAINED BY A SEARCH OF THE AVAILABLE RECORDS. TO THE BEST OF OUR KNOWLEDGE THERE ARE NO EXISTING UTILITIES EXCEPT AS SHOWN ON THESE PLANS. THE CONTRACTOR IS REQUIRED TO TAKE DUE PRECAUTIONARY MEASURES TO PROTECT THE UTILITY LINES SHOWN AND ANY OTHER LINES NOT OF RECORD OR NOT SHOWN ON THESE PLANS.
6. TRAFFIC CONTROL SIGNS SHALL BE IN PLACE PRIOR TO OPENING THE STREETS TO TRAFFIC.
7. DRIVEWAY APPROACHES SHALL BE CONSTRUCTED PER CITY OF RIVERSIDE STANDARD DRAWING NO. 302. EXACT SIZE AND LOCATION TO BE DETERMINED AT THE TIME OF CONSTRUCTION AS APPROVED BY THE CITY TRAFFIC ENGINEER.
8. THE SUBDIVIDER SHALL ARRANGE FOR A SOIL TEST TO BE MADE BY A SOILS ENGINEER AFTER THE STREETS HAVE BEEN PREPARED TO ROUGH GRADE. DEPTH OF BASE MATERIAL AND A.C. PAVING SHALL BE DETERMINED BY THE CITY OF RIVERSIDE DESIGN STANDARDS AND TEST PROCEDURES.
9. SEE "STREET LIGHTING PLAN" FOR QUANTITY AND LOCATION OF REQUIRED STREET LIGHTS.
10. 4" x 4" BLOCKOUTS FOR MAIL BOXES REQUIRED IN CURB SIDEWALK.
11. BARRICADES TO BE REMOVED SHOULD BE SALVAGED AND MADE AVAILABLE TO THE CITY OF RIVERSIDE

CONSTRUCTION NOTES:

1. CONSTRUCT 2½" A.C. OVER 8¾" D.G. BASE.
2. CONSTRUCT CURB AND GUTTER PER STANDARD DRAWING 200 (TYPE 1) 6" C.F.
3. CONSTRUCT CURB AND GUTTER PER STANDARD DRAWING 200 (TYPE 1) 8" C.F.
4. CONSTRUCT CURB SIDEWALK PER STANDARD DRAWING 325.
5. CONSTRUCT WHEELCHAIR RAMPS PER STANDARD DRAWING 304.
6. CONSTRUCT CROSS-GUTTER PER STANDARD DRAWING 220.
7. CONSTRUCT BARRICADE PER STANDARD DRAWING 180.
8. PLACE 2"x4" REDWOOD HEADER.
9. CONSTRUCT BLOCK WALL PER STD. DRAWING 704., COLOR & TEXTURE TO MATCH EXIST.

THE PRIVATE ENGINEER SIGNING THESE PLANS IS RESPONSIBLE FOR THE ACCURACY AND ACCEPTABILITY OF THE WORK HEREON. IN THE EVENT OF DISCREPANCIES ARISING DURING CONSTRUCTION THE PRIVATE ENGINEER SIGNING THE PLANS SHALL BE RESPONSIBLE FOR DETERMINING AN ACCEPTABLE SOLUTION AND REVISING THE PLANS FOR APPROVAL BY THE CITY.

STREET NAME & TRAFFIC SIGN SCHEDULE

A	PIERCE STREET	3500
	NATIONAL DRIVE	11800
B	WALTON STREET	3500
	NATIONAL DRIVE	11800
C	CONGRESS DRIVE	3500
	NATIONAL DRIVE	11700
D	GWINNETT DRIVE	3500
	CAPITOL DRIVE	11600
E	R1 (STOP SIGN)	30" OCTOGON
F	W53 (NOT A THROUGH STREET)	24" x 24"

BENCH MARK
U.S.C. & G.S. B.M. K-58 1924 DISC IN HEADWALL ON N.W. CORNER FILLMORE & S.P.R.R. TRACKS
F.D. 700/34 ELEV. 722.010

S.R. 954 R=21

APPROVED FOR S.C.G. CO
BY: [signature] 1/28/77
DATE

J. F. DAVIDSON ASSOCIATES
CIVIL ENGINEERS - SURVEYORS - PLANNERS
RIVERSIDE, CALIFORNIA
APPROVED BY [signature] DATE 2/3/77
R.E. No. 17660
W.O. 5008-2 FOR: MURRAY DEVELOPMENT CO. F.B.

MARK	REVISIONS	APPR.	DATE
A	ADDED STRUCTURAL SECTION.		5-16-77

DESIGNED BY R.E. DRAWN BY ___ CHECKED BY ___

CITY OF RIVERSIDE, CALIFORNIA
DEPARTMENT OF PUBLIC WORKS

APPROVED BY	BY	DATE
OFFICE ENGINEER	[illegible]	6/6/77
PARK DEPARTMENT	[illegible]	6-7
TRAFFIC DIVISION	[illegible]	6/6/77
ASSISTANT CITY ENG.	[illegible]	6-22
PLANNING	[illegible]	6-27

APPROVED BY [signature]
DIRECTOR OF PUBLIC WORKS
DATE 6-22-77

TITLE SHEET
TRACT 6756-3

HORIZ. SCALE: 1" = - VERT. SCALE: 1" = -

INDEXED R.A.
PROJECT NO. R-1989
SHEET 1 OF 4
FILE NO. 5557

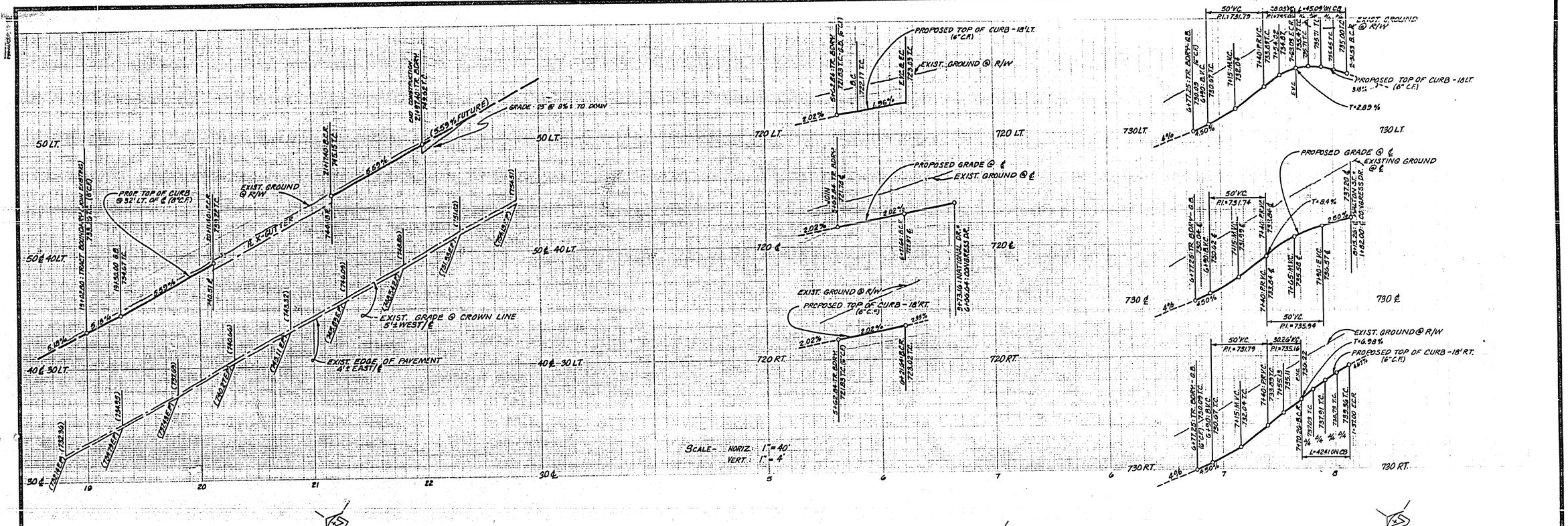

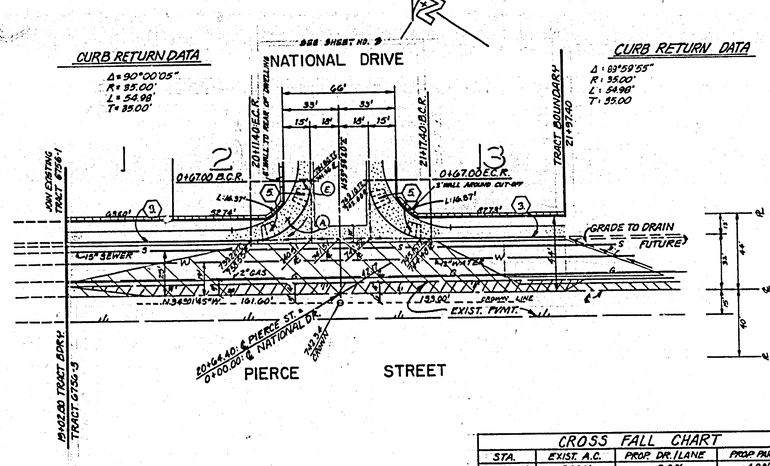

CROSS FALL CHART			
STA.	EXIST. A.C.	PROP. DR./LANE	PROP. PARK/LN.
19+02.80	2.00%	2.0%	4.0%
19+50	1.77%	1.5%	6.0%
19+80	2.88%	1.5%	4.3%
20+30	4.25%	2.0%	3.7%
20+80	2.10%	2.0%	5.3%
21+30	2.60%	1.5%	4.3%
21+80	3.20%	1.5%	3.3%
21+57.40	3.70%	2.0%	5.8%

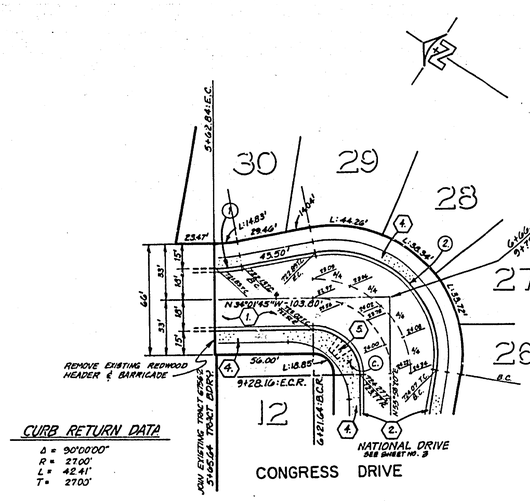

CURVE DATA				
NO.	R	Δ	T	L
(1)	100.00'	10°00'00"	8.75'	17.45'
(2)	61.00'	110°00'55"	87.14'	117.13'

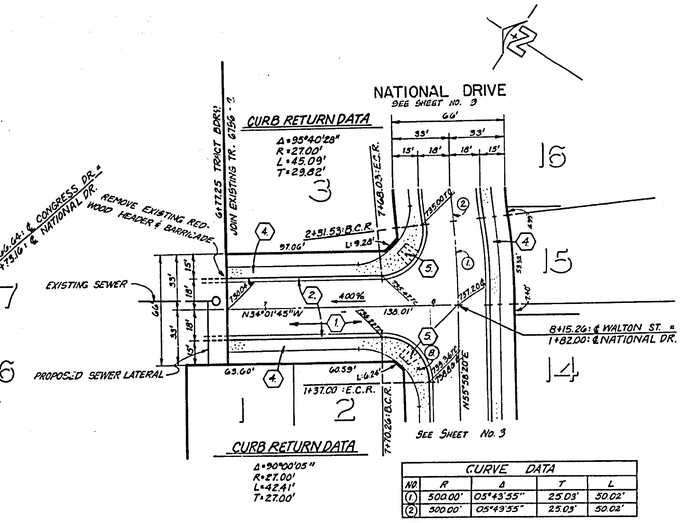

CURVE DATA				
NO.	R	Δ	T	L
(1)	500.00'	05°43'55"	25.03'	50.02'
(2)	500.00'	05°43'55"	25.03'	50.02'

LEGEND
- INDICATES OVERLAY
- INDICATES PAVING BY CITY GRADING BY DEVELOPER
- INDICATES PAVING BY DEVELOPER

BENCH MARK
U.S.C. & G.S. D.M. K-58 1924 DISC IN HEADWALL ON N.W. CORNER FILLMORE & S.P.R.R. TRACKS
F.B. 706/134 ELEV. 722.00

APPROVED FOR S.C.G. CO
BY: [signature] 1/28/77
DATE

J. F. DAVIDSON ASSOCIATES
CIVIL ENGINEERS · SURVEYORS · PLANNERS
RIVERSIDE, CALIFORNIA
APPROVED BY [signature] DATE 2/3/77
R.E. No. 17890
W.O. 5008-2 FOR: MURRAY DEVELOPMENT CO. F.B.

MARK	REVISIONS	APPR.	DATE

DESIGNED BY D.E. DRAWN BY ____ CHECKED BY ____

CITY OF RIVERSIDE, CALIFORNIA
DEPARTMENT OF PUBLIC WORKS

APPROVED BY	BY	DATE
PRINCIPAL ENGINEER	[signature]	6/21
PARK DEPARTMENT	[signature]	6-7
TRAFFIC DIVISION	[signature]	6/16/77
CHIEF P. W. ENGR.	[signature]	6-22-77
PLANNING		

APPROVED BY [signature]
DIRECTOR OF PUBLIC WORKS
DATE 6-22-77

STREET PLAN AND PROFILE
TRACT 6756-3
PIERCE STREET
CONGRESS DRIVE
WALTON STREET

HORIZ. SCALE: 1" = 40' VERT. SCALE: 1" = 4'

INDEXED P.B.
PROJECT NO. R-1989
SHEET 2 OF 4
FILE NO. 5657

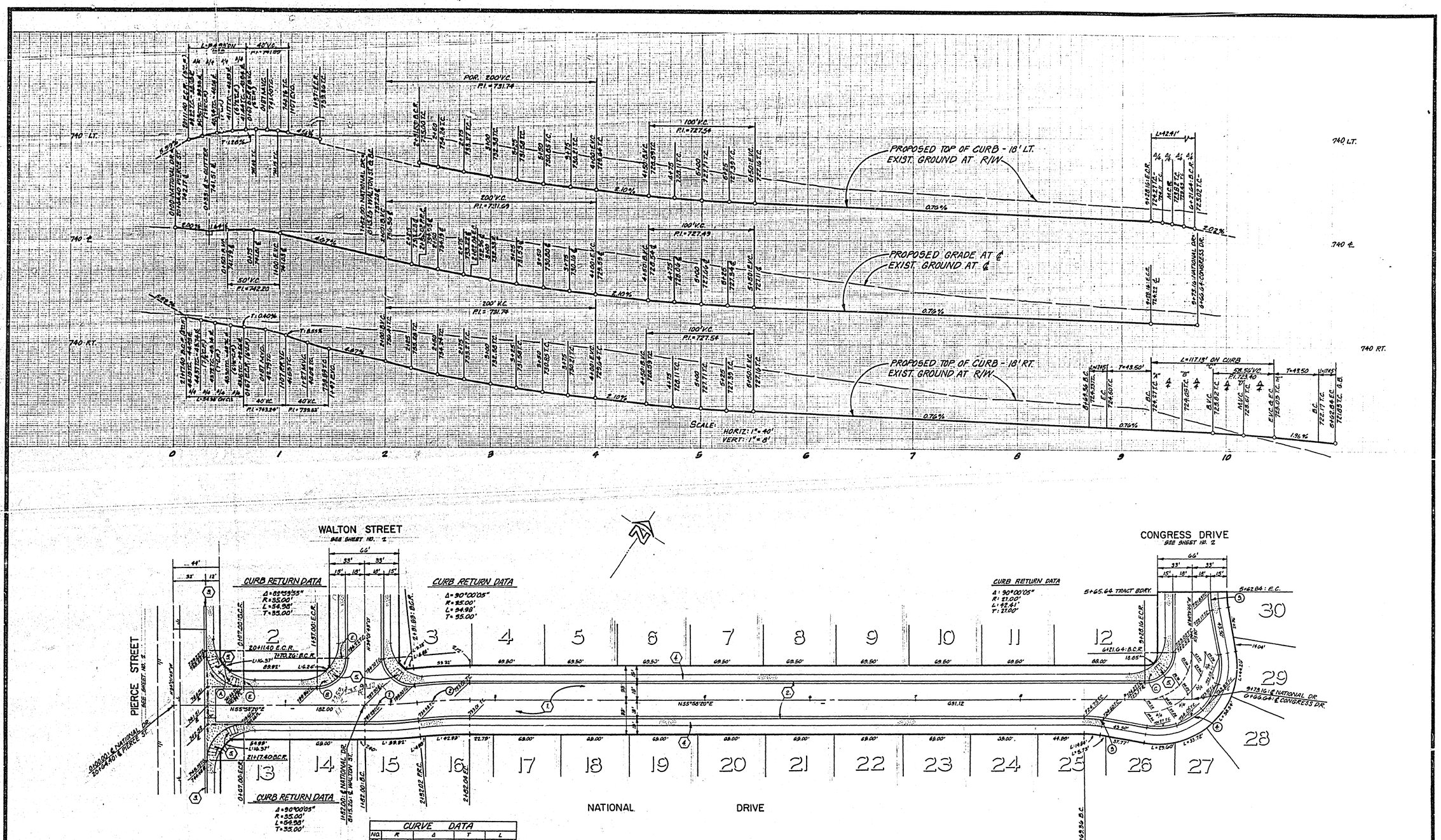

CURVE DATA				
NO.	R	Δ	T	L
1	500.00'	5°43'55"	25.03'	50.02'
2	500.00'	5°43'55"	25.03'	50.02'
3	100.00'	10°00'00"	8.75'	17.45'
4	61.00'	110°00'55"	87.14'	117.13'
5	518.00'	5°43'55"	25.93'	51.82'
6	482.00'	5°43'55"	24.13'	48.22'

BENCH MARK

U.S.C. & G.S. B.M. K-38 1924 DISC IN HEADWALL ON N.W. CORNER FILLMORE & S.F.R.R. TRACKS F.S. 706/34 ELEV. 722.010

APPROVED FOR S.C.G. CO.
BY: [signature] 1/28/77 DATE

SEE SHEET 1 FOR CONSTRUCTION NOTES

J. F. DAVIDSON ASSOCIATES
CIVIL ENGINEERS - SURVEYORS - PLANNERS
RIVERSIDE, CALIFORNIA
APPROVED BY [signature] DATE 2/3/77
R.E. No. 17890
W.O. 9008-2 FOR: MURRAY DEVELOPMENT CO. F.B.

MARK	REVISIONS	APPR.	DATE

DESIGNED BY D.E. DRAWN BY ____ CHECKED BY ____

CITY OF RIVERSIDE, CALIFORNIA
DEPARTMENT OF PUBLIC WORKS

APPROVED BY	BY	DATE
PRINCIPAL ENGINEER	[signature]	6/22
PARK DEPARTMENT		
TRAFFIC DIVISION	[signature]	6/11/77
CHIEF P. W. ENGR.	[signature]	6-22

APPROVED BY [signature]
DIRECTOR OF PUBLIC WORKS
DATE 6-22-77

STREET PLAN AND PROFILE
TRACT 6756-3
NATIONAL DRIVE
HORIZ. SCALE: 1" = 40' VERT. SCALE: 1" = 8'

INDEXED R.D.
PROJECT NO. R-1989
SHEET 3 OF 4
FILE NO. 5557

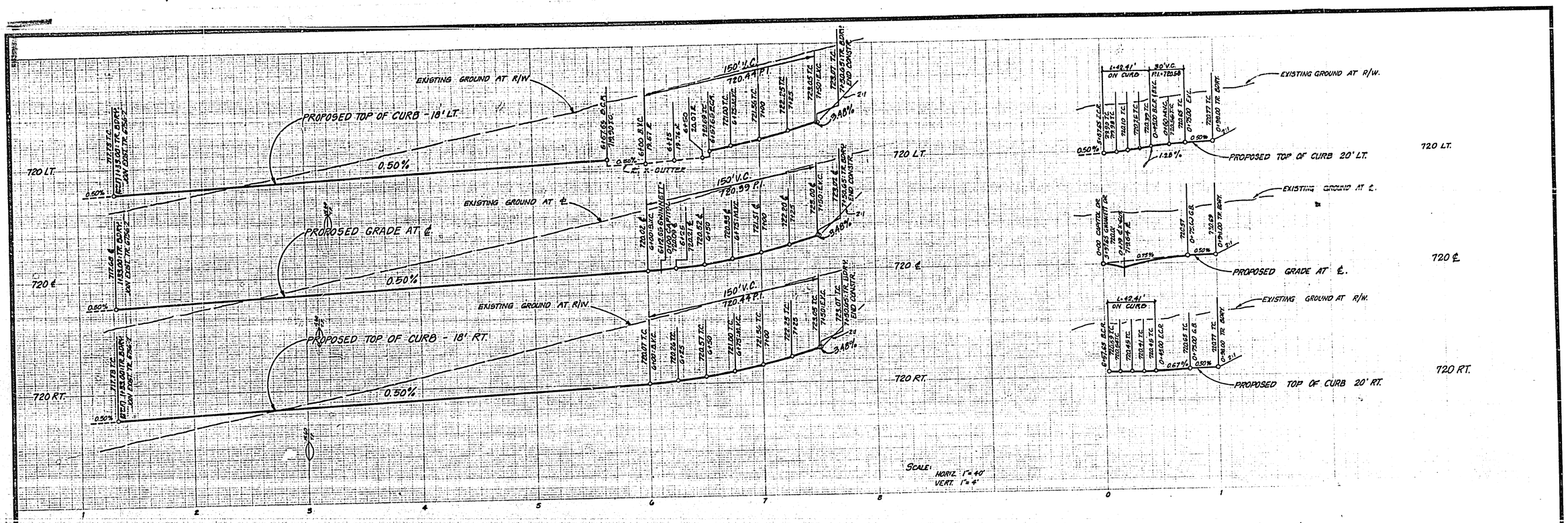

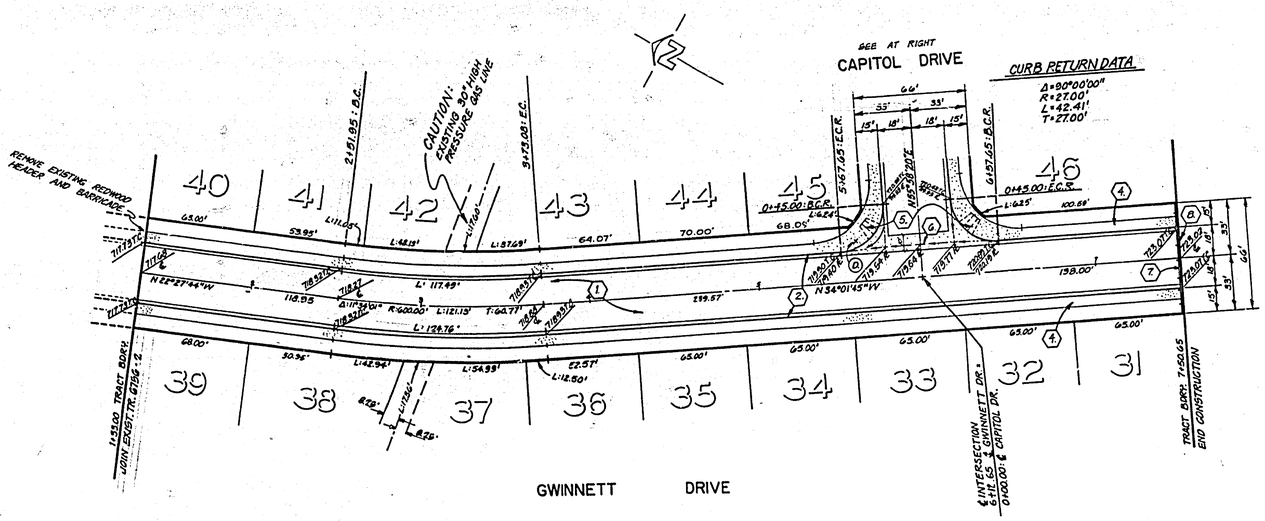

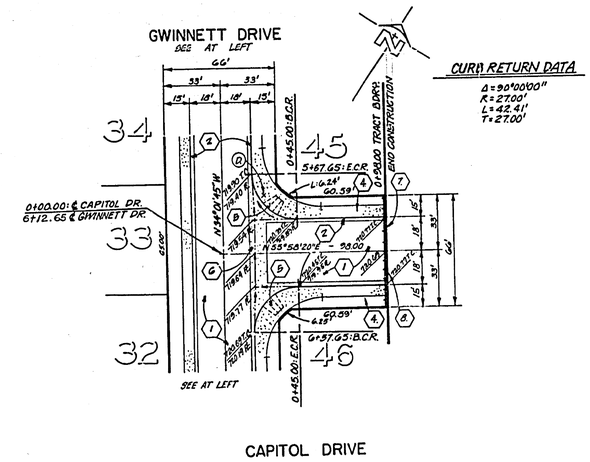

BENCH MARK

U.S.C. & G.S. B.M. K-38 1924 DISC IN HEADWALL ON N.W. CORNER FILLMORE & S.F.R.R. TRACKS
F.B. 700/34 ELEV. 722.010

APPROVED FOR S.C.G. CO.
BY: [signature] 1/25/77
DATE

J. F. DAVIDSON ASSOCIATES
CIVIL ENGINEERS · SURVEYORS · PLANNERS
RIVERSIDE, CALIFORNIA
APPROVED BY: [signature] R.E. No. 17850 DATE 2/3/77
W.O. B008-2 FOR: MURRAY DEVELOPMENT CO. F.B.

MARK	REVISIONS	APPR.	DATE

DESIGNED BY D.E. DRAWN BY ____ CHECKED BY ____

CITY OF RIVERSIDE, CALIFORNIA
DEPARTMENT OF PUBLIC WORKS

APPROVED BY	BY	DATE
PRINCIPAL ENGINEER	[illegible]	6/21
PARK DEPARTMENT		
TRAFFIC DIVISION	[illegible]	[illegible]
CHIEF P. W. ENGR.	[illegible]	6-22

APPROVED BY: [signature]
DIRECTOR OF PUBLIC WORKS
DATE 6-22-77

STREET PLAN AND PROFILE
TRACT 6756-3
GWINNETT DRIVE
CAPITOL DRIVE

HORIZ. SCALE: 1" = 40' VERT. SCALE: 1" = 4'

INDEXED D.A.
PROJECT NO. R-1989
SHEET 4 OF 4
FILE NO. 5557