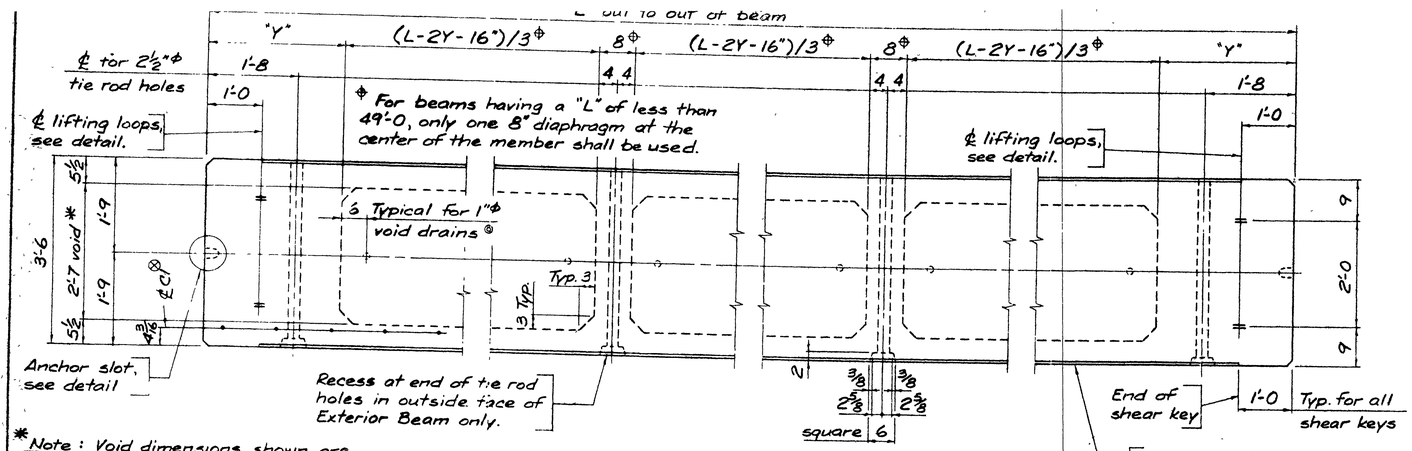

*Note: Void dimensions shown are maximum and must not be exceeded at any point including splices of void forms.

PLAN - EXTERIOR AND INTERIOR BEAMS

Note: All steel to have a minimum of 1½" concrete cover except at shear keys and anchor slots.

⊗ Bars C1 to be placed in outside face of Exterior Beam only. Bars C1 may be set after slab is screeded. Place to miss joints and drains in curb, see Sheet 2.

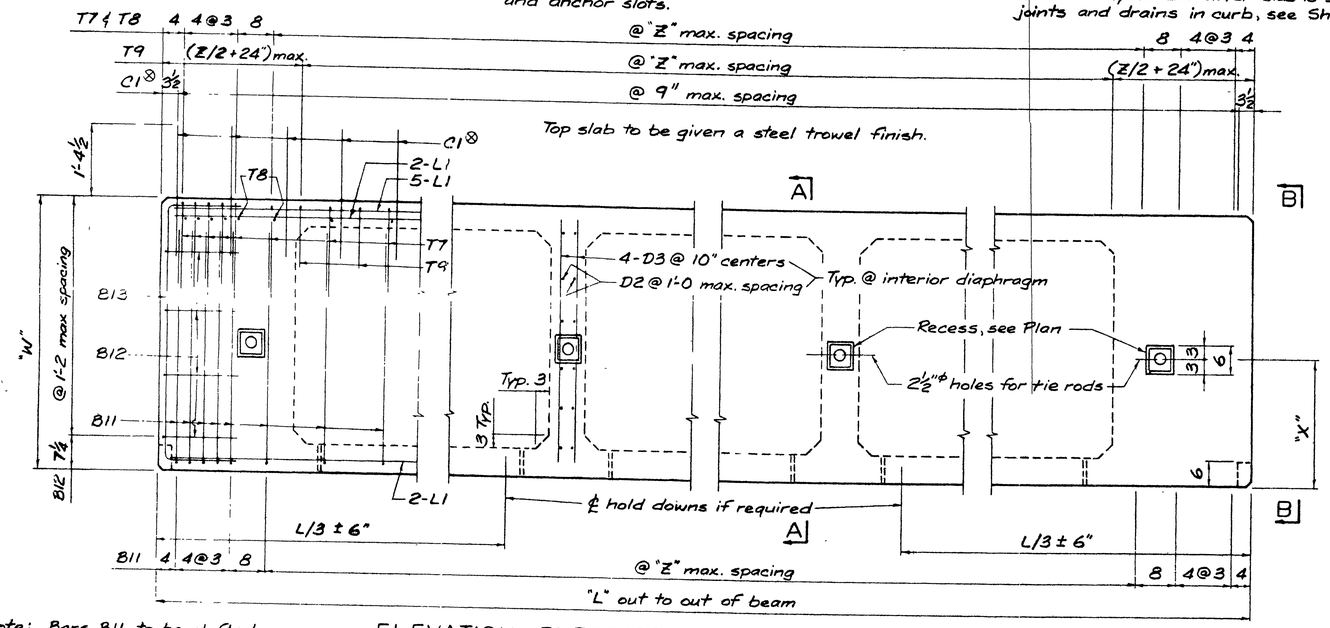

Note: Bars B11 to be shifted as required to clear 6" recesses and 1"φ void drains.

ELEVATION - EXTERIOR AND INTERIOR BEAMS

Shear key not shown, see Section A-A.

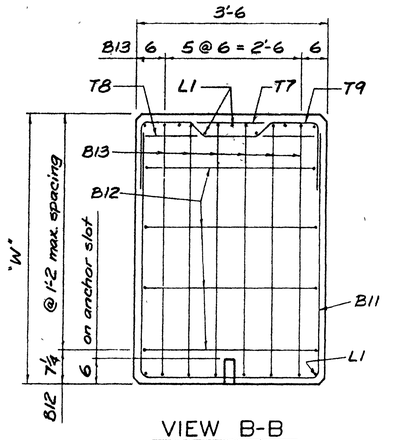

VIEW B-B

C1 for Exterior Beam not shown.

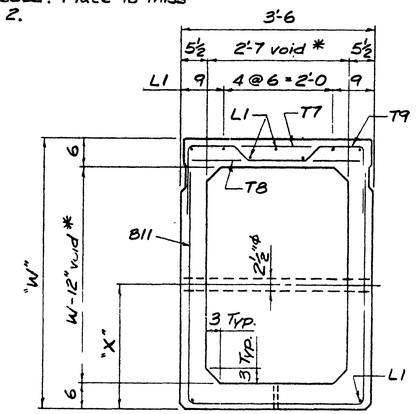

SECTION A-A FOR INTERIOR BEAM

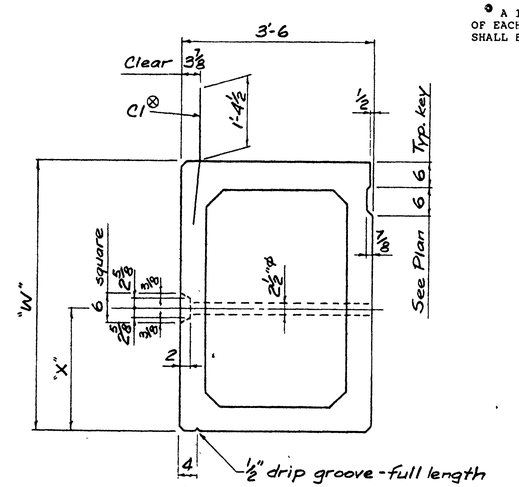

SECTION A-A FOR EXTERIOR BEAM

Mild steel reinforcing and other details not shown same as Interior Beam.

GENERAL NOTES.

DESIGN, MATERIAL AND CONSTRUCTION OF PRESTRESSED CONCRETE BEAMS SHALL BE IN ACCORDANCE WITH THE CURRENT A.R.E.A. MANUAL FOR RAILWAY ENGINEERING, CHAPTER 8, PART 17 - PRESTRESSED CONCRETE DESIGN.

ULTIMATE COMPRESSIVE CYLINDER STRENGTH OF BEAM CONCRETE SHALL BE NOT LESS THAN 4,500 p.s.i. AT TRANSFER OF PRESTRESSING FORCE, AND 5,500 p.s.i. IN 28 DAYS.

ULTIMATE COMPRESSIVE CYLINDER STRENGTH OF CURB AND WALK CONCRETE SHALL BE NOT LESS THAN 3,500 p.s.i. IN 28 DAYS.

CONCRETE SHALL BE AIR-ENTRAINED CONTAINING NOT LESS THAN 4% NOR MORE THAN 6% AIR BY VOLUME.

MAXIMUM SIZE OF COARSE AGGREGATE SHALL BE ONE INCH.

ALL PRESTRESSING STRANDS SHALL BE 1/2"φ, 7 WIRE UNCOATED, LOW-RELAXATION, WITH MINIMUM f_s' = 270,000 p.s.i. AND OTHERWISE MEETING THE REQUIREMENTS OF CURRENT A.S.T.M. DESIGNATION: A416.

INITIAL PRESTRESS SHALL BE 0.789 f_s' = 32,600 LBS. PER STRAND.

NON-PRESTRESSED REINFORCEMENT SHALL BE DEFORMED BARS MEETING CURRENT A.S.T.M. DESIGNATION: A615, GRADE 60. FABRICATION OF REINFORCING STEEL SHALL BE AS PER CHAPTER 7 OF THE CURRENT C.R.S.I. MANUAL OF STANDARD PRACTICE.

DEAD LOAD (ASSUMED-LBS. PER LIN. FT. OF TRACK)

TRACK	350
BALLAST	1560
CURB, WALK & HR	630
BEAMS	AS APPLICABLE

LIVE LOAD: COOPER'S E80 INCREASED 15 PERCENT TO PROVIDE FOR CENTRIFUGAL FORCE AND OFFSET OF CENTER LINE OF TRACK OF UP TO SIX INCHES FROM CENTER LINE OF BEAMS.

IMPACT: FOR $\ell \leq 60'$, $I = 35 - \ell^2/500$ PER CENT;

FOR $\ell > 60'$, $I = 14 + 800/(\ell - 2)$ PER CENT;

WHERE ℓ = L-16"

ALL CONCRETE FORMS EXCEPT VOID FORMS SHALL BE FILLETED 3/4 INCHES AT CORNERS AND EDGES.

SPECIAL NOTES TO MANUFACTURER:

PRODUCTION PROCEDURES AND DIMENSIONAL TOLERANCES FOR THE MANUFACTURE OF PRECAST, PRESTRESSED BEAMS SHALL BE IN ACCORDANCE WITH THE PRESTRESSED CONCRETE INSTITUTE'S CURRENT MANUAL MNL-116 FOR QUALITY CONTROL.

MANUFACTURER SHALL FURNISH ASST. CHIEF ENGINEER - STRUCTURES THREE SETS OF DETAIL DRAWINGS FOR APPROVAL PRIOR TO CASTING BEAMS. IN ADDITION TO THE DESIGN LENGTH OF THE BEAM, THE DRAWINGS SHALL SHOW THE PRE-TRANSFER CAST LENGTH REQUIRED TO CORRECT FOR THE ELASTIC SHORTENING, SHRINKAGE AND CREEP OF THE CONCRETE. COMPUTATIONS FOR THESE CORRECTIONS SHALL ACCOMPANY THE DRAWINGS.

AN ALTERNATE STRAND PATTERN BETTER SUITED TO THE MANUFACTURER'S FACILITIES WHICH HAS THE SAME ECCENTRICITY AS THE PATTERN SHOWN ON THIS PLAN WILL BE CONSIDERED FOR APPROVAL UPON SUBMISSION BY THE MANUFACTURER OF COMPUTATIONS WITH THE DETAIL DRAWINGS. HOWEVER, NO CHANGE IN THE LOCATION OF THE TOP ROW OF STRANDS WILL BE PERMITTED.

[illegible] - STRUCTURES A MYLAR REPRODUCTION OF EACH "AS BUILT" DETAIL DRAWING FOR HIS PERMANENT FILE.

L1 BARS MAY BE ADDED IN THE BEAM WALLS TO FACILITATE NON-PRESTRESSED REINFORCEMENT PLACEMENT, ONLY IF A 1-1/2 INCH MINIMUM CLEARANCE CAN BE MAINTAINED BETWEEN THE L1 BARS AND THE PRESTRESSING STRANDS.

TACK WELDING OF NON-PRESTRESSED REINFORCEMENT IS PROHIBITED.

IF REINFORCING BAR SUPPORTS ARE USED, THEY SHALL BE CLASS 1, PLASTIC PROTECTED, IN ACCORDANCE WITH CHAPTER 3 OF THE CURRENT C.R.S.I. MANUAL OF STANDARD PRACTICE.

MANUFACTURER SHALL BURN BACK PRESTRESSING STRANDS TO A DEPTH OF ONE INCH BELOW SURFACE OF CONCRETE ON END OF BEAM. RESULTING RECESSES SHALL BE FILLED WITH EPOXY GROUT.

⊗ A 1"φ VOID DRAIN SHALL BE PLACED AT THE CENTER AND AT 6" FROM EACH END OF EACH VOID ALONG THE CENTERLINE OF THE BEAM. FORMS FOR THESE VOID DRAINS SHALL BE REMOVED PRIOR TO SHIPMENT SO DRAINS MAY ACT AS WITNESS HOLES.

AS BUILT DRAWINGS

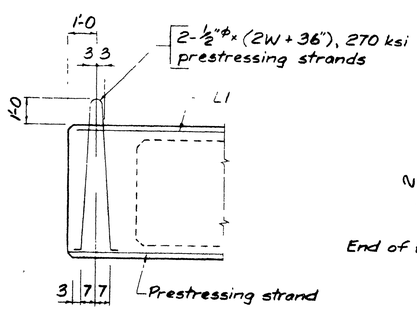

LIFTING LOOP DETAIL

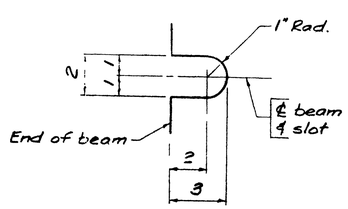

ANCHOR SLOT DETAIL

BEAM DIMENSIONS AND SECTION PROPERTIES

"W"	"X"	"Y"	"Z"	SECTION AT VOID AREA (IN^2)	I (IN^4)
STRAIGHT STRANDS ONLY					
3'-0	1'-5	2'-0	0'-10	786	129,771
3'-3	1'-7	2'-0	0'-10-1/2	819	159,590
3'-6	1'-9	2'-0	0'-10-1/2	852	193,095
3'-9	1'-11	2'-0	0'-11	885	230,434
4'-0	2'-0	2'-0	0'-11-1/2	918	271,755
4'-3	2'-1	2'-3	1'-0	951	317,208
4'-6	2'-3	2'-3	1'-0	984	366,939
5'-0	2'-7	2'-6	1'-1	1050	479,835
HARPED STRANDS					
5'-0	2'-4	2'-6	1'-1-1/2	1050	479,835
5'-6	2'-10	2'-9	1'-2-1/2	1116	611,631
6'-0	2'-10	3'-0	1'-2-1/2	1182	763,515

Work Sheets 1 and 2 together.

SHEET 1 OF 2 DRAWINGS

B.E.S. 2082
MONROE STREET AT A.T. & S.F.
THE A. T. & S. F. RY. COMPANY

STANDARD PRESTRESSED CONCRETE SINGLE BOX BEAMS

SCALE: NONE
CORRECT: C. E. Hilliard
ASST. CHIEF ENGINEER-STRUCTURES

CHICAGO, ILL., OCTOBER 1984
APPROVED: H. L. W. [illegible]
CHIEF ENGINEER

R-3594

MADE BY: VVT
CHECKED BY: PHz
EXAMINED BY: CRW

INDEXED 8-8-2000 GH

PRESTRESSING STRANDS FOR BEAMS WITH HARP STRANDS

"L" NOT GREATER THAN	"L" NOT LESS THAN	NO. REQUIRED	"e" BTWN. HARP POINTS (IN.)	"e" AT ENDS (IN.)	STRAND PATTERN BETWEEN HARP POINTS			STRAND PATTERN AT END		
66'-9	63'-9	42	23.70	17.85	ABCDEFG(2,4)	H(2,4,6)	J(4,6,8,55)	ABCDEFG(2,4)	H(2,4,6)	J(45,47,49,55)
68'-11	66'-1	46	23.27	16.10	ABCDEFG(2,4)	H(2,4,6)	J(4,6,8,10,12,55)	ABCDEFG(2,4)	H(2,4,6)	J(37,39,41,43,45,55)
72'-3	68'-11	44	26.25	18.43	ABCDEFG(2,4)	H(2,4,6)	J(4,6,8,10,61)	ABCDEFG(2,4)	H(2,4,6)	J(47,49,51,53,61)
74'-11	70'-2	48	25.71	16.46	ABCDEFG(2,4)	H(2,4,6)	J(4,6,8,10,12,14,61)	ABCDEFG(2,4)	H(2,4,6)	J(41,43,45,47,49,51,61)
78'-10	74'-1	48	28.46	17.96	ABCDEFG(2,4)	H(2,4,6)	J(4,6,8,10,12,14,67)	ABCDEFG(2,4)	H(2,4,6)	J(45,47,49,53,55,57,67)
80'-8	73'-7	52	27.71	17.98	ABCDEFG(2,4)	H(2,4,6)	J(4,6,8,10,12,14,16,18,67)	ABCDEFG(2,4)	H(2,4,6)	J(4,41,43,45,49,51,53,55,67)

PRESTRESSING STRANDS FOR BEAMS WITH STRAIGHT STRANDS ONLY

"W"	"L" NOT GREATER THAN	NO. REQUIRED	"e" (IN.)	STRAND PATTERN	
3'-0	37'-7	28	11.25	ABDFGH(2,4)	J(24,31)
3'-0	40'-1	32	11.19	ABDFGH(2,4)	J(6,8,24,31)
3'-3	41'-0	30	12.32	ABDFGH(2,4)	J(10,24,34)
3'-3	43'-4	34	12.19	ABDFGH(2,4)	J(4,10,12,24,34)
3'-6	44'-3	32	13.19	ABDFGH(2,4)	J(8,12,28,37)
3'-6	46'-2	36	12.58	ABDFGH(2,4)	J(8,10,12,16,28,37)
3'-9	47'-8	34	14.13	ABDFGH(2,4)	J(8,10,14,30,40)
3'-9	49'-4	38	13.30	ABDFGH(2,4)	J(4,8,10,14,28,30,40)
4'-0	49'-9	34	15.10	ABDFGH(2,4)	J(6,14,16,32,43)
4'-0	52'-5	38	15.07	ABDFGH(2,4)	J(6,8,10,14,16,32,43)
4'-3	53'-1	36	15.92	ABDFGH(2,4)	J(8,12,16,20,30,46)
4'-3	55'-4	40	15.75	ABDFGH(2,4)	J(4,8,12,16,18,20,30,46)
4'-6	56'-2	38	16.80	ABDFGH(2,4)	J(6,10,14,18,22,34,49)
4'-6	58'-2	42	16.23	ABDFGH(2,4)	J(6,10,12,14,18,20,22,34,49)
5'-0	61'-5	40	18.60	ABDFGH(2,4)	J(6,12,14,18,22,24,36,55)
5'-0	63'-9	44	18.43	ABDFGH(2,4)	J(6,10,12,14,16,18,22,24,36,55)

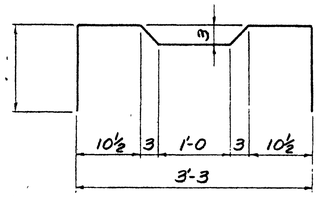

BAR T9

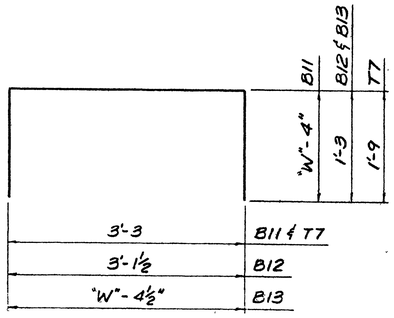

BARS B11, B12, B13 & T7

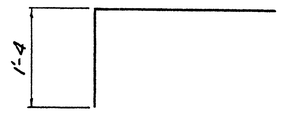

BAR W1

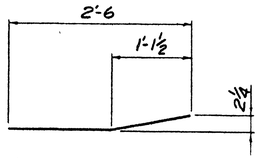

BAR C1

REINFORCING STEEL

MARK	SIZE	LENGTH	SHAPE	MARK	SIZE	LENGTH	SHAPE
B11	#4	2W + 31"	SEE DETAIL	D3	#4	W-4"	STRAIGHT
B12	#5	5'-8	SEE DETAIL	L1	#4	L-4"^^	STRAIGHT
B13	#5	W + 26"	SEE DETAIL	T7	#5	6'-9	SEE DETAIL
C1	#5	2'-6	SEE DETAIL	T8	#5	3'-3	STRAIGHT
C2	#4	◉	STRAIGHT	T9	#5	5'-10	SEE DETAIL
D2	#4	2'-2	STRAIGHT	W1	#5	4'-0	SEE DETAIL

◉ LENGTH OF CURB SECTION - 4".

^^ MINIMUM LAP OF L1 BARS WHEN SPLICED SHALL BE 19"

All dimensions are out to out of bars. Bend #4 bars around 3"ϕ pin and #5 bars around 3¾"ϕ pin.

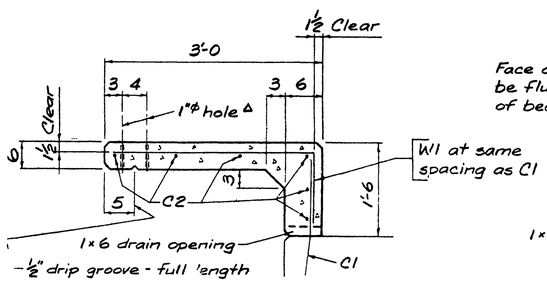

WALK AND CURB DETAIL

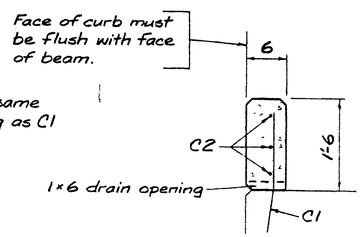

CURB DETAIL

CURB OR CURB AND WALK TO BE CAST ON PRESTRESSED BEAM AFTER STRANDS ARE DETENSIONED. BOND NEW CONCRETE TO PRESTRESSED BEAM BY COATING CONTACT AREA WITH SIKADUR HI-MOD, MADE BY SIKA CHEMICAL CORP., OR EQUAL. FRESH CONCRETE MUST BE PLACED WHILE BOND COAT IS STILL TACKY.

PREFORMED 1/2" X 6" ASPHALT EXPANSION BOARD TO BE PLACED AS TO DIVIDE CURB INTO THE NUMBER OF EQUAL SEGMENTS SHOWN BELOW LEAVING A 1/2" JOINT IN WALK. A 1" X 6" DRAIN OPENING SHALL BE FORMED AT THE CENTER OF EACH EXPANSION BOARD AND AT THE CENTER OF EACH CURB SEGMENT.

FOR L LESS THAN 52'-11:

DIVIDE CURB INTO THREE EQUAL SEGMENTS.
△ TWO 1"ϕ HOLES SHALL BE LOCATED 17", 17"+R, 17"+2R, 17"+3R, 17"+4R AND 17"+5R FROM ONE END OF BEAM. R = (L-34")/5.

FOR L FROM 52'-11 TO 72'-10:

DIVIDE CURB INTO FOUR EQUAL SEGMENTS.
△ TWO 1"ϕ HOLES SHALL BE LOCATED 17", 17"+R, 17"+2R, 17"+3R, 17"+4R, 17"+5R, 17"+6R AND 17"+7R FROM ONE END OF BEAM. R = (L-34")/7.

FOR L GREATER THAN 72'-10:

DIVIDE CURB INTO FIVE EQUAL SEGMENTS.
△ TWO 1"ϕ HOLES SHALL BE LOCATED 17", 17"+R, 17"+2R, 17"+3R, 17"+4R, 17"+5R, 17"+6R, 17"+7R, 17"+8R AND 17"+9R FROM ONE END OF BEAM. R = (L-34")/9.

△ 1"ϕ HOLES MUST BE IN PROPER LOCATION OR HANDRAIL WILL NOT FIT.

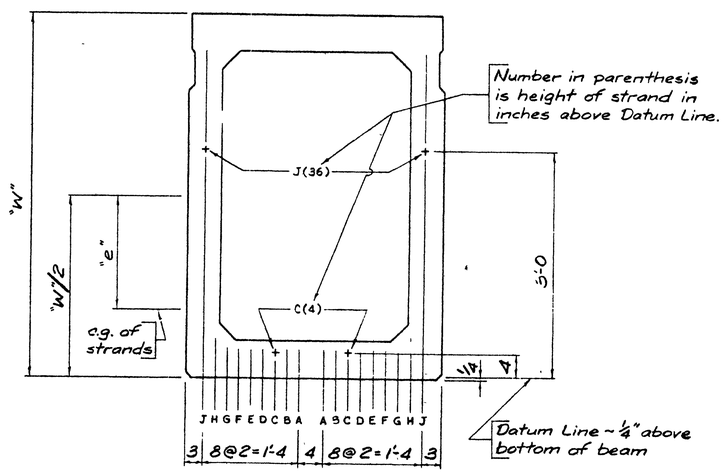

STRAND PATTERN DIAGRAM FOR EXTERIOR AND INTERIOR BEAMS

AS BUILT DRAWINGS

REVISIONS	
Date	Description
10/90	Walk and curb detail
7/92	C1 spacing

Work Sheets 1 and 2 together

SHEET 2 OF 2 DRAWINGS

B.E.S. 2082
MONROE STREET AT AT. & S.F.
THE A. T. & S. F. RY. COMPANY

STANDARD PRESTRESSED CONCRETE SINGLE BOX BEAMS

SCALE: NONE
CORRECT:
ASST CHIEF ENGINEER - STRUCTURES

CHICAGO, ILL., OCTOBER 1984
APPROVED:
CHIEF ENGINEER

R-3594

MADE BY: VVT
CHECKED BY: PW
EXAMINED BY: CRW

INDEXED 8-8-2000 GH