STREET IMPROVEMENT PLANS FOR:

TRACT No. 31028

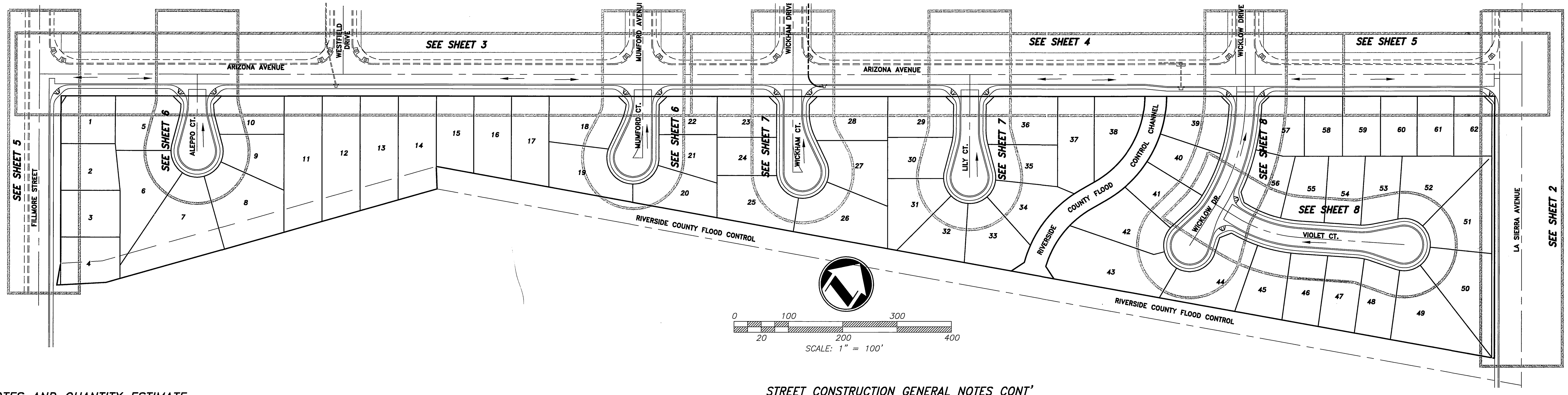

CONSTRUCTION NOTES AND QUANTITY ESTIMATE

THE QUANTITIES SHOWN BELOW ARE FOR BONDING INFORMATION ONLY. THE CONTRACTOR IS TO CONSTRUCT PROJECT PER THESE PLANS AND SUBMIT CONSTRUCTION BID BASED ON THEIR OWN QUANTITY "TAKE-OFF".

(1)	PLACE 3.0 " A.C. OVER 4.5 " C.A.B. PER S.R. 1620 R= 52	54,739 SF
(1A)	PLACE 5.5 " A.C. OVER 6.0 " C.A.B. PER S.R. 1620 R= 52	10,548 SF
(1B)	PLACE 3.0 " A.C. OVER 4.0 " C.A.B. PER S.R. 1620 R= 52	57,994 SF
(2)	CONSTRUCT 6" CURB & GUTTER PER C/RIV. STD. DWG NO. 200 (TYPE I)	6,840 LF
(3)	CONSTRUCT 6' SIDEWALK PER C/RIV. STD. DWG NO. 325	43,710 SF
(4)	CONSTRUCT 8" CURB & GUTTER PER C/RIV. STD. DWG NO. 200 (TYPE I)	445 LF
(5)	CONSTRUCT DRIVEWAY APPROACH PER C/RIV. STD. DWG. NO. 302 (TYPE CURB-I)	62 EA
(6)	CONSTRUCT HANDICAPPED ACCESS RAMP PER C/RIV. STD. DWG. NO. 304	14 EA
(7)	CONSTRUCT 4' WIDE CATCH BASIN PER C/RIV. STD. DWG. NO. 405 (V=4.0')	3 EA
(8)	INSTALL 18" HDPE PIPE - SMOOTH INTERIOR LINER (CELL CLASS 32440C OR HIGHER) CLASS # BEDDING PER C/RIV. STD. DWD. NO. 452	41 LF
(9)	CONSTRUCT CROSS GUTTER PER C/RIV. STD. DWG. NO. 220	7,980 SF
(10)	CONSTRUCT CONCRETE COLLAR PER C/RIV. STD. DWG. NO. 424	1 EA

WATER DEPARTMENT NOTE:

1. DEVELOPER TO GIVE THE CITY WATER DIVISION FIVE (5) WORKING DAYS WRITTEN NOTICE PRIOR TO START OF CONSTRUCTION AND TO ALLOW THE CITY TEN (10) WORKING DAYS FOR THE COMPLETION OF THE WORK. (909) 351-6368

LEGEND

BLDG.	BUILDING	GB	GRADE BREAK	TC	TOP OF CURB
CB	CATCH BASIN	H.C.	HANDICAPPED	TEL.	TELEPHONE
CHLK	CHAIN LINK FENCE	HP	HIGH POINT	TG	TOP OF GRATE
C&G	CURB AND GUTTER	INV.	INVERT OF PIPE	TF	TOP OF FOOTING
C.L.	CENTERLINE	LP	LOW POINT	TW	TOP OF WALL
CONC.	CONCRETE	MH	MAN HOLE	W	WATER
D/W	DRIVEWAY	P.P.	POWER POLE		
EP	EDGE OF PAVEMENT	R.D.	ROOF DRAIN		
EXIST.	EXISTING	R.O.W.	RIGHT-OF-WAY		
FF	FINISHED FLOOR	SWR	SEWER		
FH	FIRE HYDRANT	S/W	SIDEWALK		
FL	FLOW LINE	SD	STORM DRAIN		
FS	FINISHED SURFACE	STD.	STANDARD		

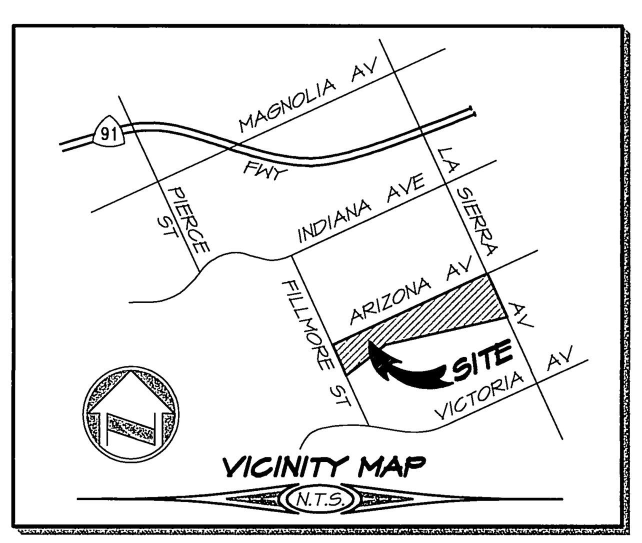

STREET SIGN SCHEDULE

(A)	LA SIERRA AVENUE	2900
	ARIZONA AVENUE	11100
(B)	ARIZONA AVENUE	11400
	ALEPPO COURT	2900
(C)	ARIZONA AVENUE	11300
	MUMFORD COURT	2900
(D)	ARIZONA AVENUE	11300
	WICKHAM COURT	2900
(E)	ARIZONA AVENUE	11300
	LILY COURT	2900
(F)	ARIZONA AVENUE	11300
	WICKLOW DRIVE	2900
(G)	WICKLOW DRIVE	2900
	VIOLET COURT	11100
(H)	ARIZONA AVENUE	11400
	FILLMORE STREET	2900
(I)	W53 (NOT A THROUGH STREET)	
(J)	R1 (STOP SIGN)	

INSTALL SIGNS PER CITY OF RIVERSIDE STANDARD DRAWINGS #662 & #666

STREET CONSTRUCTION GENERAL NOTES

1. NO PERSON SHALL PERFORM ANY CONSTRUCTION ACTIVITY OR INSTALL ANY OBJECTS WITHIN THE PUBLIC RIGHT-OF-WAY OR EASEMENTS OF THE CITY OF RIVERSIDE WITHOUT A VALID CONSTRUCTION PERMIT OR, A STREET OPENING PERMIT OR AN ENCROACHMENT PERMIT ISSUED BY THE CITY'S PUBLIC WORKS DEPARTMENT.
2. IT SHALL BE THE RESPONSIBILITY OF THE CONTRACTOR TO CLEAR THE RIGHT OF WAY IN ACCORDANCE WITH THE PROVISIONS OF LAW AS IT AFFECTS EACH UTILITY INCLUDING IRRIGATION LINES AND APPURTENANCES AND AT NO COST TO THE CITY.
3. CONSTRUCTION SHALL BE IN ACCORDANCE WITH THE CITY OF RIVERSIDE DEPARTMENT OF PUBLIC WORKS, STANDARD DRAWINGS, ITS SUPPLEMENTAL NOTES AND THE STANDARD SPECIFICATIONS FOR PUBLIC WORKS CONSTRUCTION, CURRENT EDITION.
4. THE PRIVATE ENGINEER SIGNING THESE PLANS IS RESPONSIBLE FOR ASSURING THE ACCURACY AND ACCEPTABILITY OF THE WORK HEREON. IN THE EVENT OF DISCREPANCIES ARISING DURING CONSTRUCTION, THE PRIVATE ENGINEER SHALL BE RESPONSIBLE FOR DETERMINING AN ACCEPTABLE SOLUTION AND REVISING THE PLANS FOR APPROVAL BY THE CITY.
5. QUANTITIES SHOWN ARE FOR INFORMATION ONLY AND THE CITY OF RIVERSIDE IS NOT RESPONSIBLE FOR THEIR ACCURACY.
6. THE DEVELOPER SHALL BE RESPONSIBLE FOR PRESERVING OR REESTABLISHING AND REFERENCING SURVEY MONUMENTS DESTROYED, DISTURBED OR BURIED AS A RESULT OF CONSTRUCTION SHOWN HEREON.
7. THE CONTRACTOR SHALL COORDINATE TRENCHING FOR CABLE TELEVISION WITH OTHER TRENCHING WITHIN THE PROJECT.
8. ALL FLAGGED ELEVATIONS SHALL BE STAKED IN THE FIELD BY THE PRIVATE ENGINEER.
9. WHERE NEW PAVEMENT IS TO JOIN THE EXISTING PAVEMENT, EDGE OF THE EXISTING PAVEMENT SHALL BE TRIMMED IN A SMOOTH AND STRAIGHT LINE. CONSTRUCT MATCH-UP PAVING AS SHOWN ON THE PLANS AND OVERLAY PAVING AS DIRECTED IN THE FIELD TO PRODUCE A SMOOTH SECTION.
10. CONSTRUCT DRIVEWAY APPROACHES PER STANDARD DRAWING 302. EXACT SIZE AND LOCATION TO BE STAKED BY THE PRIVATE ENGINEER PRIOR TO CONSTRUCTION OF THE CURB AND GUTTER.
11. ON ALL AREAS WITHIN PUBLIC RIGHT OF WAY WHERE THE FILL IS ONE (1) FOOT OR GREATER, A LETTER WILL BE REQUIRED FROM THE SOILS ENGINEER, CERTIFYING THE COMPACTION OF THE FILL BELOW SUBGRADE, PRIOR TO ISSUANCE OF THE CONSTRUCTION PERMIT/CUT SHEETS.
12. ANY TRAFFIC CONTROL STRIPING OBLITERATED AND/OR BADLY WORN DURING CONSTRUCTION SHALL BE RESTORED BY CONTRACTOR WITHIN FIVE DAYS AFTER NOTIFICATION FROM THE CITY INSPECTORS.

STREET CONSTRUCTION GENERAL NOTES CONT'

13. FINAL STRIPING FOR TRAFFIC CONTROL AND/OR PAVEMENT MARKING TO BE THE RESPONSIBILITY OF THE DEVELOPER. (CONTRACTOR IS TO REPLACE THE CENTERLINE STRIPING WITHIN PROJECT LIMITS)
14. THE CONTRACTOR SHALL CALL IN A LOCATION REQUEST TO UNDERGROUND SERVICE ALERT (USA), PHONE # 1-800-227-2600, TWO WORKING DAYS BEFORE DIGGING. NO CONSTRUCTION PERMIT WILL BE ISSUED BY THE PUBLIC WORKS DEPARTMENT INVOLVING EXCAVATION FOR UNDERGROUND FACILITIES UNLESS THE APPLICANT HAS BEEN PROVIDED AN INQUIRY IDENTIFICATION NUMBER BY U.S.A.
15. IN PAVEMENT OVERLAY AREAS, ANY DISTRESSED EXISTING PAVEMENT SHALL BE REMOVED AND REPLACED AS DIRECTED BY THE INSPECTOR PRIOR TO OVERLAYING WITH A.C. PAVING.
16. THE CONTRACTOR IS RESPONSIBLE FOR THE INSTALLATION OF STREET LIGHTS AND UNDERGROUND ELECTRIC UTILITY FACILITIES. CONTACT RIVERSIDE PUBLIC UTILITIES 90 DAYS IN ADVANCE OF CONSTRUCTION TO OBTAIN APPROVED STREET LIGHT AND ELECTRIC PLANS.
    CONTACT: BILL MAINORD
    PH. NO. (909) 826-5393
    3900 MAIN STREET, 4th. FLOOR
    RIVERSIDE CALIFORNIA, 92522
17. THE SUBDIVIDER SHALL ARRANGE FOR A SOIL TEST TO BE MADE BY A SOILS ENGINEER AFTER THE STREETS HAVE BEEN PREPARED TO ROUGH GRADE AND PRIOR TO CURB AND GUTTER CONSTRUCTION. DEPTH OF BASE MATERIAL AND A.C. PAVING SHALL BE DETERMINED BY THE CITY OF RIVERSIDE DESIGN STANDARDS AND TEST PROCEDURES.
18. BEFORE THE RIP-RAP AT THE OUTLET OF ANY DRAINAGE STRUCTURE IS ACCEPTED BY THE CITY, IT SHALL BE TESTED UNDER FLOWS AS CLOSE AS POSSIBLE TO DESIGN CONDITIONS WITH WATER OBTAINED FROM FIRE HYDRANTS IN THE IMMEDIATE AREA.
19. SEE PUBLIC LANDSCAPE PLAN NO. R-3726-L AS PREPARED BY ROBERT A. MITCHELL AND ASSOCIATES FOR REVERSE FROUNTAGE LANDSCAPE IMPROVEMENTS ALONG LA SIERRA AVENUE.

WATER DEPARTMENT NOTE:

1. DEVELOPER TO GIVE THE CITY WATER DIVISION FIVE (5) WORKING DAYS WRITTEN NOTICE PRIOR TO START OF CONSTRUCTION AND TO ALLOW CITY TEN (10) WORKING DAYS FOR COMPLETION OF WORK. (909) 351-6368.

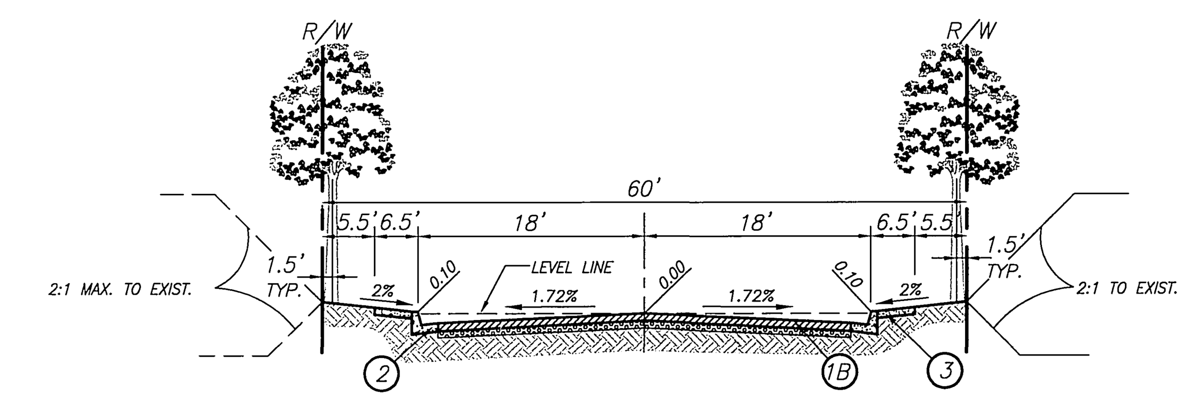

LILY COURT
MUMFORD COURT, VIOLET COURT
WICKHAM DRIVE, WICKLOW DRIVE
TYPICAL STREET SECTION - T.I.=5.0
N.T.S.

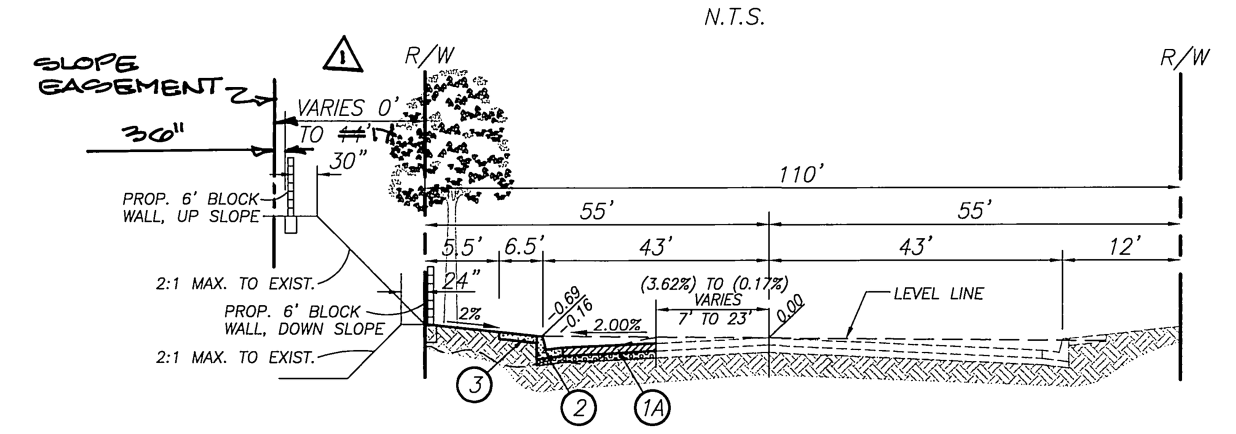

LA SIERRA AVENUE
TYPICAL STREET SECTION - T.I.=9.0
N.T.S.

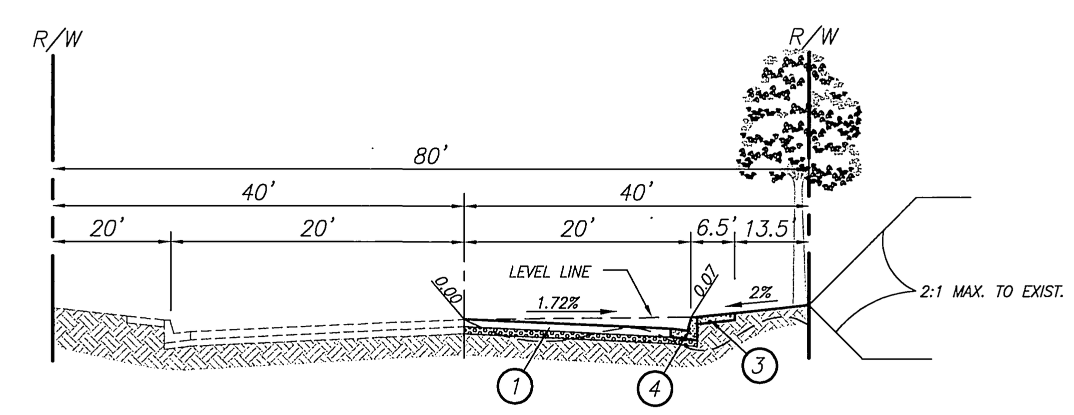

FILLMORE STREET
TYPICAL STREET SECTION - T.I.=6.0
N.T.S.

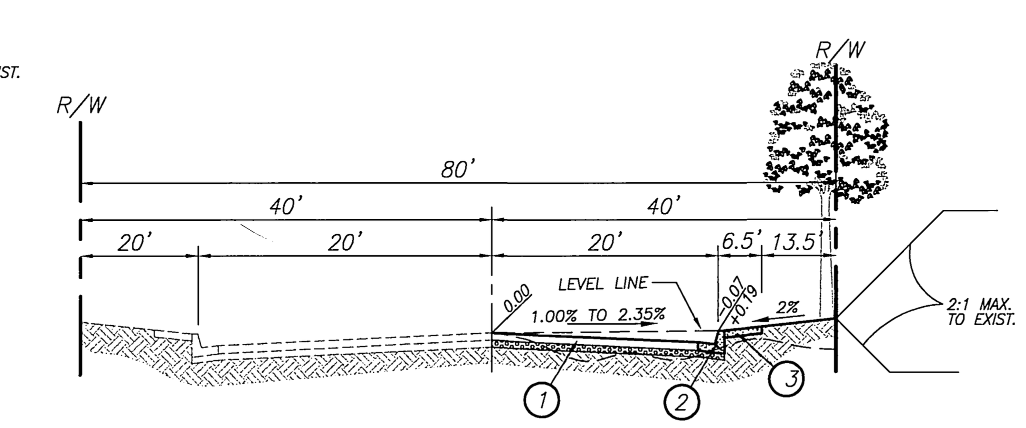

ARIZONA AVENUE
(STA 0+54.93 TO STA 2+35.00)
TYPICAL STREET SECTION - T.I.=6.0
N.T.S.

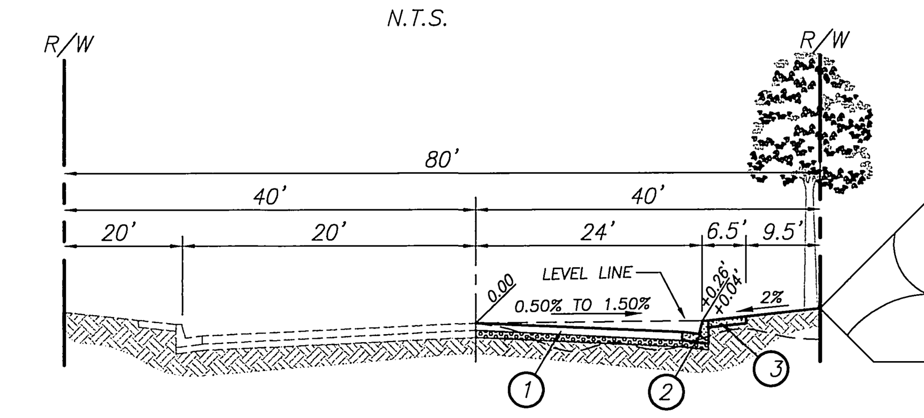

ARIZONA AVENUE
(STA 20+75.00 TO STA 26+64.00)
TYPICAL STREET SECTION - T.I.=6.0
N.T.S.

REGISTERED PROFESSIONAL ENGINEER
CHARISSA J.A. LEACH
NO. 53390
EXP. 6-30-07
CIVIL
STATE OF CALIFORNIA

CITY OF RIVERSIDE BUSINESS TAX ACCT.#058833 EXP.1/1/04

WESTERN MUNICIPAL WATER DISTRICT
REVIEWED FOR NON-INTERFERENCE COMPLIANCE SH. 1 THRU 8
~~APPROVED~~ BY [signature] 11/17/03
DATE

CITY OF RIVERSIDE WATER DEPT.
[signature] 11/18/03
APPROVED BY IAM DATE

CITY OF RIVERSIDE
PUBLIC UTILITIES DEPARTMENT-ELECTRICAL OVERHEAD & UNDERGROUND
[signature] 11/18/03
APPROVED BY DATE

Underground Service Alert
Call: TOLL FREE
1-800 227-2600
TWO WORKING DAYS BEFORE YOU DIG

PLANS PREPARED BY:
adkan ENGINEERS
CIVIL ENGINEERING• SURVEYING PLANNING
6820 AIRPORT DRIVE, RIVERSIDE, CA 92504
TEL: (909) 688-0241 • FAX: (909) 688-0599
DATE: 11.14.03
UNDER THE SUPERVISION OF: R.C.E. 53390 6/30/07

BENCHMARK: E2-P2
CITY OF RIVERSIDE
CHISELED SQUARE ON THE TOP OF CURB AT THE WESTERLY END OF A CATCH BASIN FRONTING THE SOUTHERLY CURB OF INDIANA AVENUE AT THE SOUTHEAST CORNER OF INDIANA AVENUE AND FILLMORE STREET.
ELEVATION: 738.410

MARK	REVISIONS	APPR.	DATE
1	ADD SLOPE ESMT TO LA SIERRA	RJZ	1-2004

DESIGNED BY: RICK DRAWN BY: RICK CHECKED BY: C-

CITY OF RIVERSIDE
PUBLIC WORKS DEPARTMENT

APPROVED BY	DATE	BY
PRINCIPAL ENGINEER	12/11/03	[initials]
PARK DEPARTMENT	11/17/03	[initials]
TRAFFIC DIVISION	12/11/03	[initials]
STREET SERVICES	11-17-03	[initials]

APPROVED BY [signature]
CITY ENGINEER
DATE 12/11/03

STREET IMPROVEMENT PLAN
TRACT 31028
COVER SHEET
A.P.N. 136-030-003-8, 136-030-001-6 and 136-030-009-4
HORIZ. SCALE: AS NOTED VERT. SCALE: N/A

PW03-0100
R-3726
SHEET 1 OF 8
J.N. 6371

Plot date: 11/14/03
PC-4393-S

File name: U:\Drawing\meeker\6371\6371st01

INDEXED 1-12-04 4H

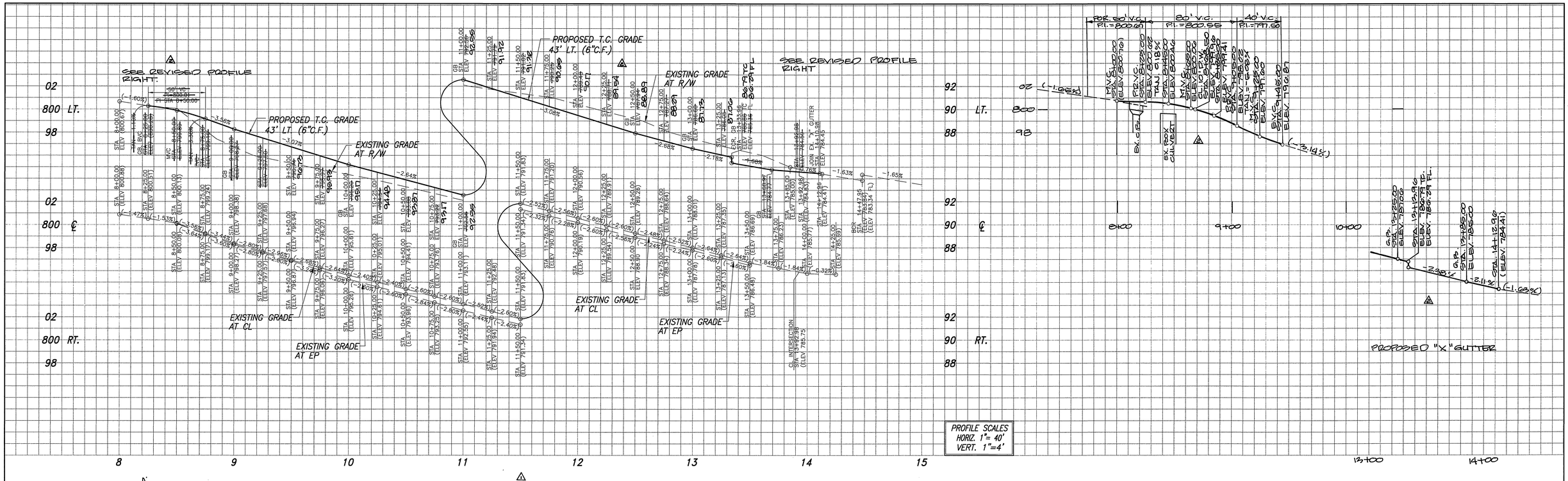

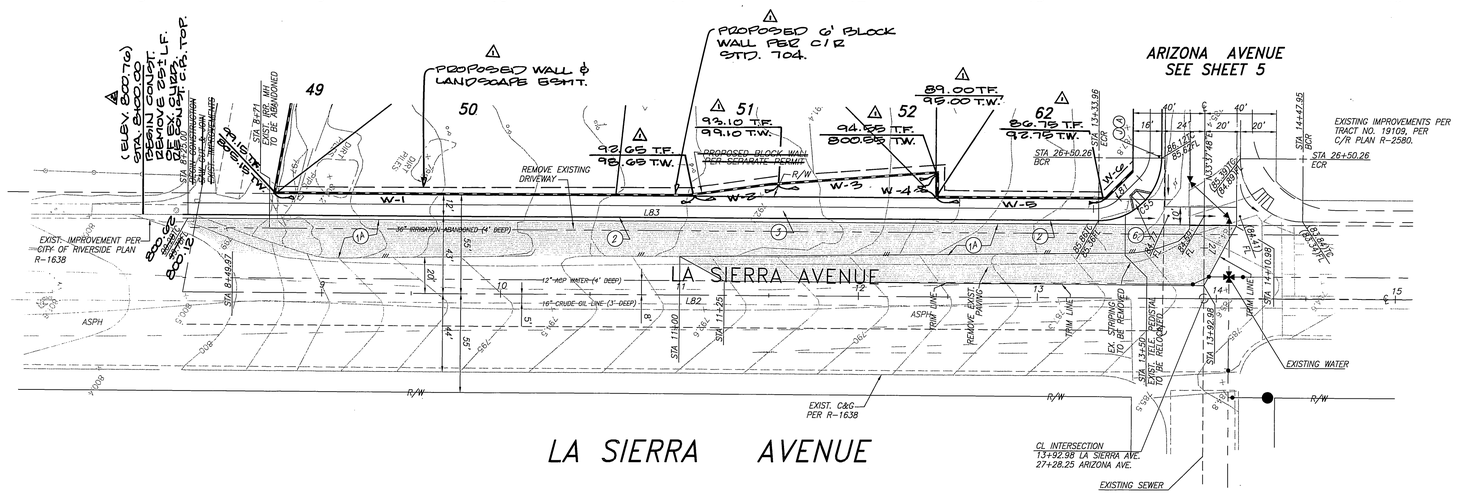

LINE TABLE FOR BLOCK WALL

NO.	DIRECTION	DISTANCE
W-1	N.33°37'48"W.	232.00'
W-2	N.41°41'34"W.	46.00'
W-3	N.38°04'47"W.	94.00'
W-4	N.58°26'16"E.	13.00'
W-5	N.33°37'48"W.	92.00'
W-6	N.78°38'14"W.	21.00'

LINE TABLE SHEET 2

NUMBER	DIRECTION	DISTANCE
L67	N 56°21'20" E	377.76'
L68	N 56°21'20" E	508.70'
L69	N 56°21'20" E	393.91'
L81	N 78°38'14" W	21.22'
L82	N 33°37'48" W	567.98'
L83	N 33°37'48" W	508.96'

CURVE TABLE SHEET 2

NUMBER	Δ =	R '	L '	T '
C55	90°00'52"	35.00	54.99	35.01

REGISTERED PROFESSIONAL ENGINEER CHARISSA J.A. LOCH NO. 53390 EXP. 6-30-07 CIVIL STATE OF CALIFORNIA

0 40 120 / 20 80 160

SCALE: 1" = 40'

CITY OF RIVERSIDE BUSINESS TAX ACCT.#058833 EXP.1/1/04

Underground Service Alert — Call: TOLL FREE 1-800 227-2600 — TWO WORKING DAYS BEFORE YOU DIG

PLANS PREPARED BY: adkan ENGINEERS — CIVIL ENGINEERING SURVEYING PLANNING — 6820 AIRPORT DRIVE, RIVERSIDE, CA 92504 — TEL: (909) 688-0241 FAX: (909) 688-0699 — DATE: 11.14.03 — UNDER THE SUPERVISION OF: R.C.E. 53390 6/30/07

BENCHMARK: E2-P2

CITY OF RIVERSIDE

CHISELED SQUARE ON THE TOP OF CURB AT THE WESTERLY END OF A CATCH BASIN FRONTING THE SOUTHERLY CURB OF INDIANA AVENUE AT THE SOUTHEAST CORNER OF INDIANA AVENUE AND FILMORE STREET.

ELEVATION: 738.410

MARK	REVISIONS	APPR.	DATE
2	REVISED C&G. STA. 8+00 TO 9+45 REV. "X" GUTT. AS-BUILT CHRS.	RJZ	3-11-04
1	ADD WALL INFO. & EASEMENT	RJZ	1-29-04

DESIGNED BY: RICK DRAWN BY: RICK CHECKED BY: C-

CITY OF RIVERSIDE
PUBLIC WORKS DEPARTMENT

APPROVED BY	DATE	BY
PRINCIPAL ENGINEER	12/11/03	
PARK DEPARTMENT	12/17/03	
TRAFFIC DIVISION	12/11/03	
STREET SERVICES	11-18-03	2004

APPROVED BY: Tim Bird — CIVIL ENGINEER — DATE 12/14/03

STREET IMPROVEMENT PLAN — PW03-0100

TRACT 31028
LA SIERRA AVENUE
STA 8+25 TO STA 13+92.98

A.P.N. 136-030-003-8, 136-030-001-6 and 136-030-009-4

R-3726

SHEET 2 OF 8

HORIZ. SCALE: 1" = 40' VERT. SCALE: 1" = 4' J.N. 6371

File name: U:\DRAWING\MEEKER\6371\6371ST02

Plot date: 11/14/03 PL-4383-S

INDEXED 1-12-04 GH

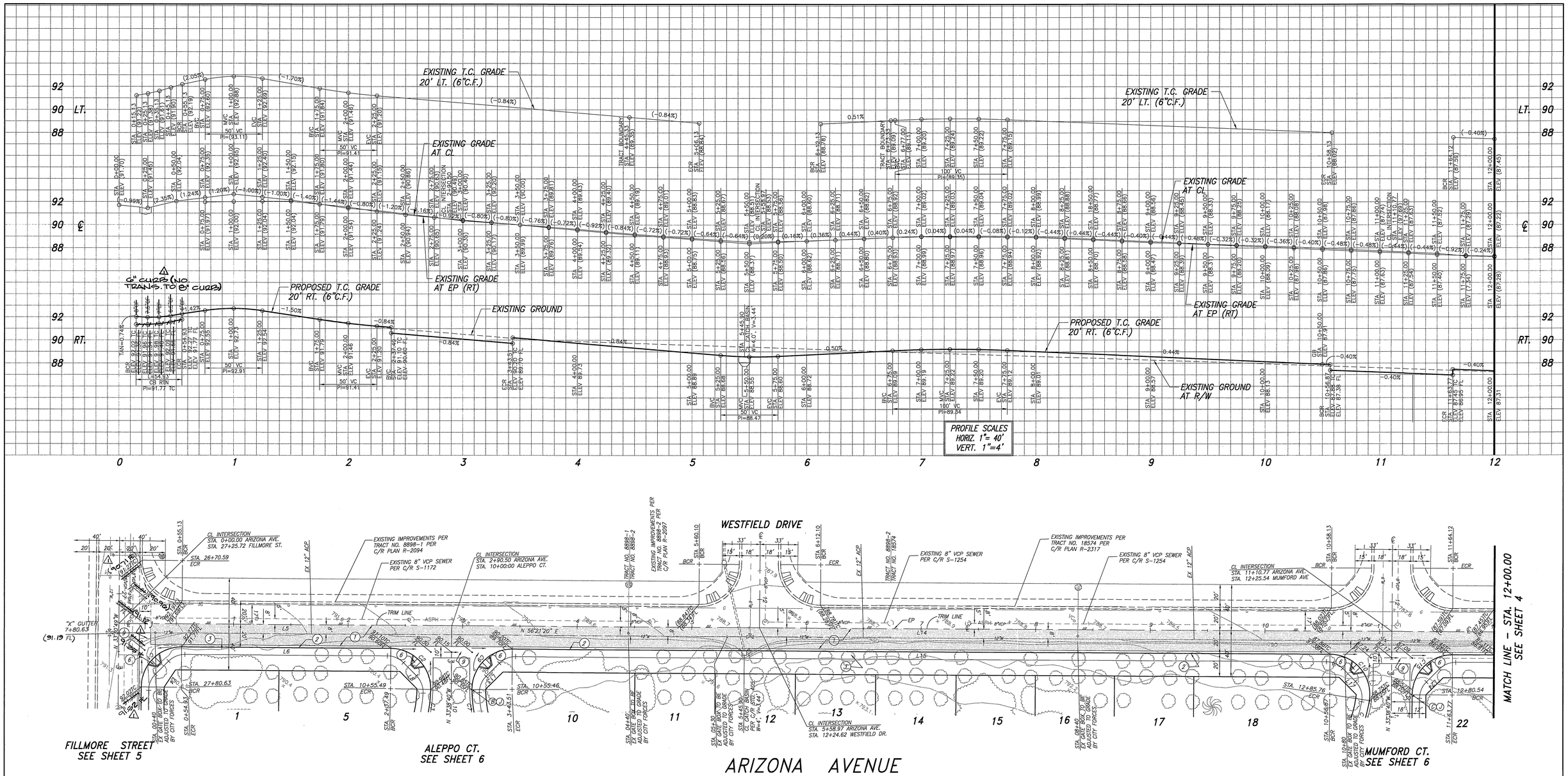

LINE TABLE SHEET 3

NUMBER	DIRECTION	DISTANCE
L4	N 00°30'56" W	17.89'
L5	N 56°21'20" E	290.50'
L6	N 56°21'20" E	182.57'
L8	N 78°38'21" W	21.22'
L10	N 33°38'40" W	141.00'
L13	N 11°21'01" E	21.22'
L14	N 56°21'20" E	820.27'
L15	N 56°21'20" E	713.36'
L17	N 78°53'11" W	21.31'
L20	N 33°38'40" W	152.80'
L22	N 33°38'40" W	97.80'
L24	N 11°20'54" E	21.22'
L25	N 56°21'20" E	276.24'
L26	N 56°21'20" E	170.24'

CURVE TABLE SHEET 3

NUMBER	Δ =	R '	L '	T '
C1	89°55'22"	35.00	54.93	34.95
C2	90°45'28"	35.00	55.44	35.47
C3	14°14'30"	115.00	28.58	14.37
C5	209°59'56"	36.00	131.95	134.36
C7	14°14'30"	115.00	28.58	14.37
C8	14°24'28"	103.00	25.90	13.02
C9	90°45'28"	35.00	55.44	35.47
C10	98°35'03"	35.00	60.22	40.68
C11	16°52'02"	115.00	33.85	17.05
C14	205°27'05"	36.00	129.09	159.41
C15	90°00'00"	35.00	54.98	35.00

REGISTERED PROFESSIONAL ENGINEER
CHARISSA J.A. LEACH
NO. 53390
EXP. 6-30-07
CIVIL
STATE OF CALIFORNIA

0 40 120
20 80 160
SCALE: 1" = 40'

CITY OF RIVERSIDE BUSINESS TAX ACCT.#058833 EXP.1/1/04

Underground Service Alert
CALL BEFORE YOU DIG
Call: TOLL FREE
1-800 227-2600
TWO WORKING DAYS BEFORE YOU DIG

PLANS PREPARED BY:
adkan ENGINEERS
CIVIL ENGINEERING SURVEYING PLANNING
6820 AIRPORT DRIVE, RIVERSIDE, CA 92504
TEL: (909) 689-0241 FAX: (909) 689-2699
DATE: 11-14-05
UNDER THE SUPERVISION OF:
R.C.E. 53390 6/30/07

BENCHMARK: E2-P2
CITY OF RIVERSIDE
CHISELED SQUARE ON THE TOP OF CURB AT THE WESTERLY END OF A CATCH BASIN FRONTING THE SOUTHERLY CURB OF INDIANA AVENUE AT THE SOUTHEAST CORNER OF INDIANA AVENUE AND FILLMORE STREET.
ELEVATION: 738.410

MARK	REVISIONS	APPR.	DATE
1	REV. CURBS RETURN.	RJZ	2-17-04

DESIGNED BY: RICK DRAWN BY: RICK CHECKED BY: C-

CITY OF RIVERSIDE
PUBLIC WORKS DEPARTMENT

APPROVED BY	DATE	BY
PRINCIPAL ENGINEER	12/16/03	
PARK DEPARTMENT	11/17/03	
TRAFFIC DIVISION	1-14-07	
STREET SERVICES	1-17-07	

APPROVED BY
CIVIL ENGINEER
DATE 12/4/03

STREET IMPROVEMENT PLAN
TRACT 31028
ARIZONA AVENUE
STA. 0+00 TO STA. 12+00
A.P.N. 136-030-003-8, 136-030-001-6 and 136-030-009-4
HORIZ. SCALE: 1" = 40' VERT. SCALE: 1" = 4'

PW03-0100
R-3726
SHEET 3 OF 8
J.N. 6371

File name: U:\DRAWING\MEEKER\6371\63715T03

Plot date: 1/14/03
PC-4583-S

INDEXED 1-12-04 GH

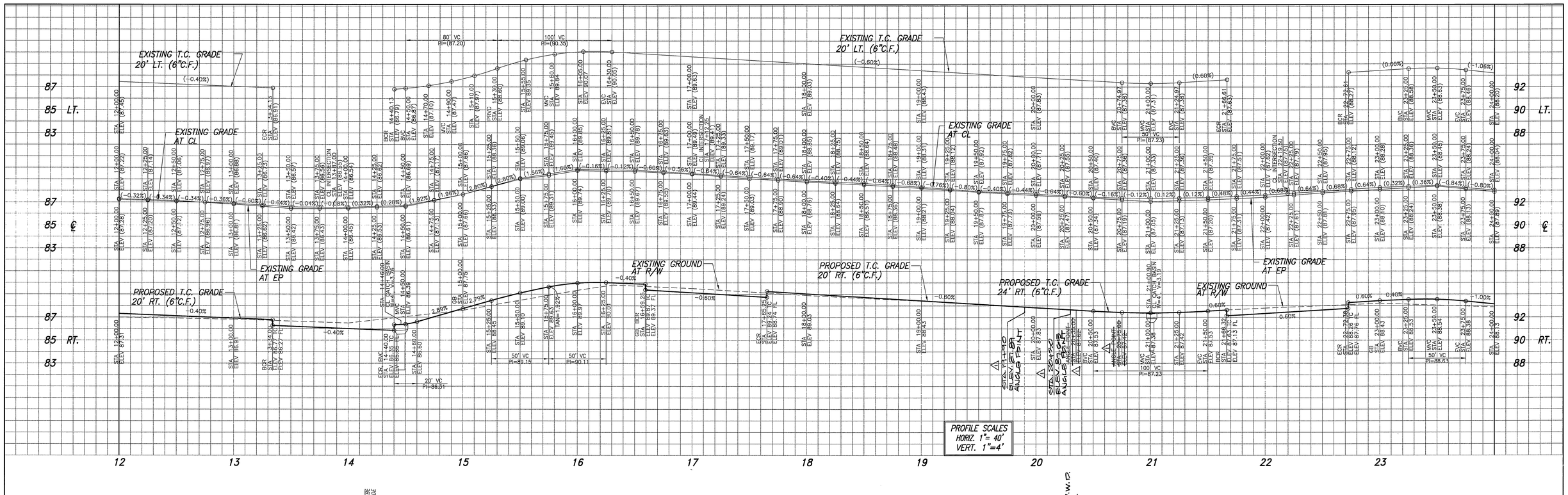

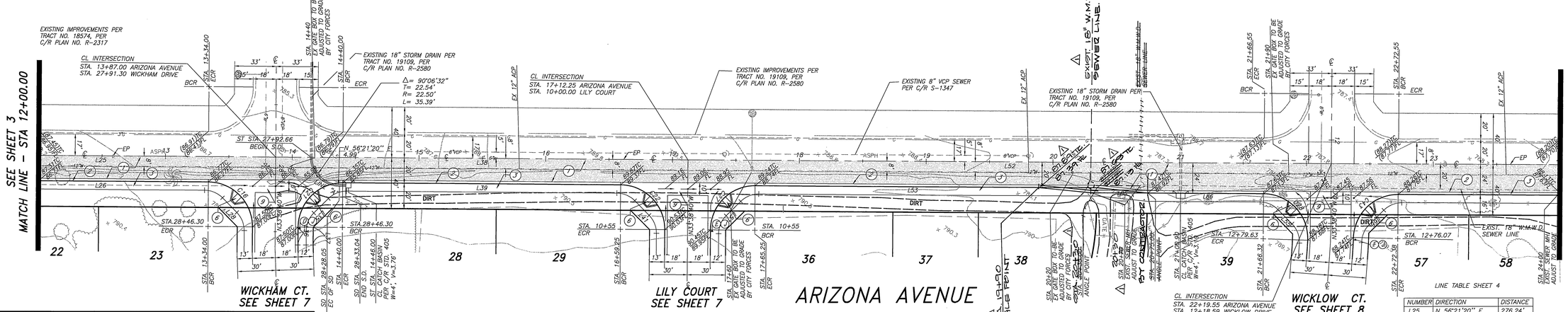

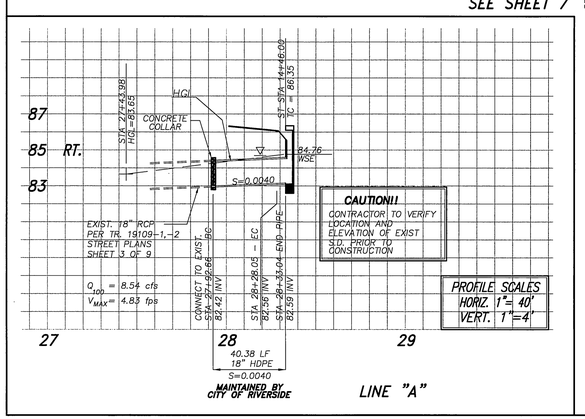

LINE TABLE SHEET 4

NUMBER	DIRECTION	DISTANCE
L25	N 56°21'20" E	276.24'
L26	N 56°21'20" E	170.24'
L28	N 78°38'14" W	21.22'
L31	N 33°38'40" W	178.70'
L35	N 11°20'54" E	21.22'
L36	N 33°38'40" W	13.96'
L37	N 33°38'40" W	13.95'
L38	N 56°21'20" E	325.25'
L39	N 56°21'20" E	219.25'
L41	N 78°38'14" W	21.22'
L43	N 33°38'40" W	46.44'
L46	N 33°38'40" W	188.50'
L49	N 33°38'40" W	46.44'
L51	N 11°20'54" E	21.22'
L52	N 56°21'20" E	507.30'
L53	N 56°21'20" E	269.75'
L55	N 77°54'35" W	21.77'
L66	N 11°54'14" E	20.79'
L67	N 56°21'20" E	377.76'
L68	N 56°21'20" E	508.70'
L85	N 62°03'58" E	40.20'
L86	N 56°21'20" E	91.32'
L70	N 33°38'40" W	47.00'

CURVE TABLE SHEET 4

NUMBER	Δ =	R '	L '	T '
C16	90°00'00"	35.00	54.98	35.00
C19	25°27'05"	115.00	51.08	25.97
C21	90°00'00"	35.00	54.98	35.00
C22	90°00'00"	35.00	54.98	35.00
C27	90°00'00"	35.00	54.98	35.00
C28	91°28'10"	35.00	55.88	35.91
C32	30°10'26"	347.00	182.74	93.54
C33	31°35'57"	365.00	201.30	103.28
C34	24°12'05"	383.00	161.78	82.11
C43	88°54'12"	35.00	54.31	34.34

REGISTERED PROFESSIONAL ENGINEER
GHASSAN J.A. TAKAH
NO. 53390
EXP. 6-30-07
CIVIL
STATE OF CALIFORNIA

WESTERN MUNICIPAL WATER DISTRICT
APPROVED BY DATE

CITY OF RIVERSIDE BUSINESS TAX ACCT.#058833 EXP.1/1/04

Underground Service Alert
Call: TOLL FREE
1-800 227-2600
TWO WORKING DAYS BEFORE YOU DIG

PLANS PREPARED BY:
adkan ENGINEERS
CIVIL ENGINEERING SURVEYING PLANNING
6820 AIRPORT DRIVE, RIVERSIDE, CA 92504
TEL: (909) 688-0241 FAX: (909) 688-9599
DATE: 11-14-03
UNDER THE SUPERVISION OF: R.C.E. 53390 6/30/07

BENCHMARK: E2-P2
CITY OF RIVERSIDE
CHISELED SQUARE ON THE TOP OF CURB AT THE WESTERLY END OF A CATCH BASIN FRONTING THE SOUTHERLY CURB OF INDIANA AVENUE AT THE SOUTHEAST CORNER OF INDIANA AVENUE AND FILLMORE STREET.
ELEVATION: 738.410

MARK	REVISIONS	APPR.	DATE
1	REVISED CURB ANGLE POINTS	RJZ	2-17-04

DESIGNED BY: RICK DRAWN BY: RICK CHECKED BY: C-

CITY OF RIVERSIDE
PUBLIC WORKS DEPARTMENT

	APPROVED BY	DATE	BY
PRINCIPAL ENGINEER	11/13/03		
PARK DEPARTMENT	11/19/03		
TRAFFIC DIVISION	12/11/03		
STREET SERVICES	11/19/03		

APPROVED BY: CIVIL ENGINEER
DATE 12/4/07

STREET IMPROVEMENT PLAN
PW03-0100

TRACT 31028
ARIZONA AVENUE
STA. 12+00 TO STA. 24+00
A.P.N. 136-030-003-8, 136-030-001-6 and 136-030-009-4

R-3726
SHEET 4 OF 8

HORIZ. SCALE: 1" = 40' VERT. SCALE: 1" = 4' J.N. 6371

File name: U:\DRAWING\MEEKER\6371\6371ST04

Plot date: 11/14/03

Pc-6393-S

INDEXED 1-12-04 GH

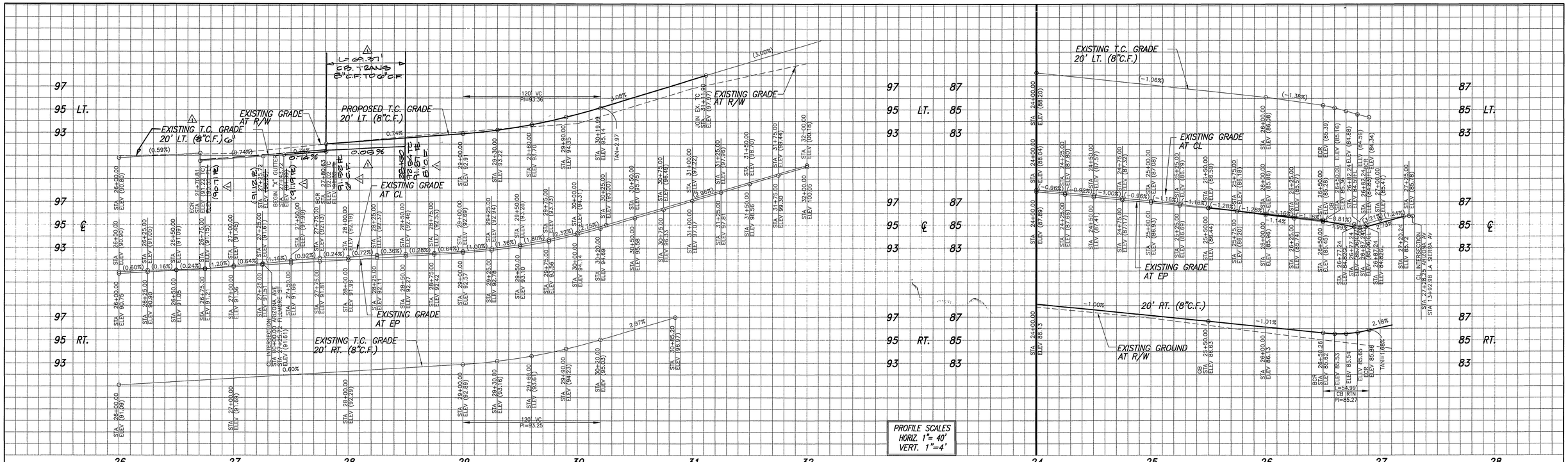

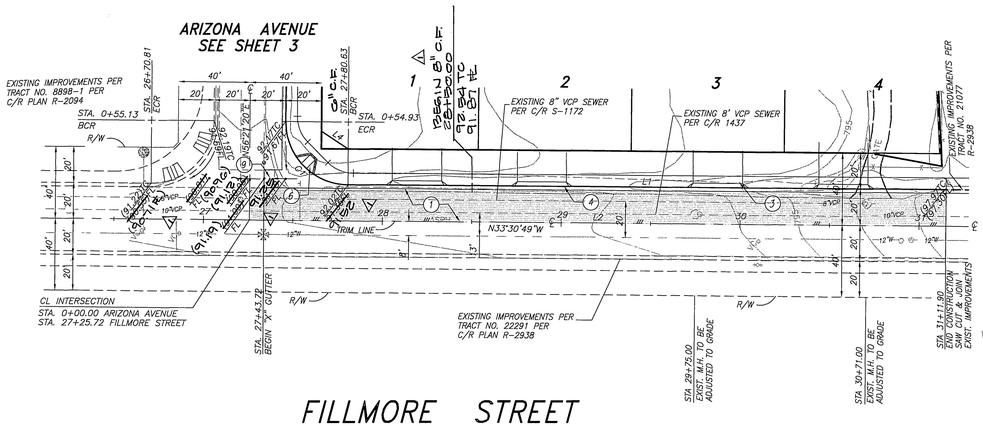

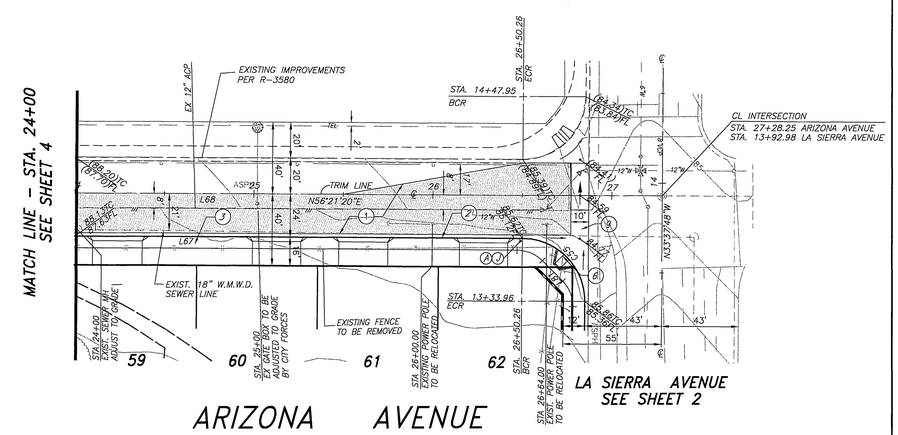

LINE TABLE SHEET 5

NUMBER	DIRECTION	DISTANCE
L1	N 33°34'02" W	333.12'
L2	N 33°30'49" W	389.24'
L4	N 00°30'36" W	17.89'
L5	N 56°21'20" E	290.50'
L6	N 56°21'20" E	182.57'
L67	N 56°21'20" E	377.86'
L68	N 56°21'20" E	508.70'
L82	N 33°37'48" W	570.76'
L83	N 33°37'48" W	507.98'

CURVE TABLE SHEET 5

NUMBER	Δ=	R '	L '	T '
C1	89°55'22"	35.00	54.93	34.95
C55	90°00'52"	35.00	54.99	35.01

SCALE: 1" = 40'

SCALE: 1" = 40'

REGISTERED PROFESSIONAL ENGINEER GHASSAN J.A. EKADI NO. 53390 EXP. 6-30-07 CIVIL STATE OF CALIFORNIA

CITY OF RIVERSIDE BUSINESS TAX ACCT.#058833 EXP.1/1/04

WESTERN MUNICIPAL WATER DISTRICT
APPROVED BY ____ DATE ____

Underground Service Alert
Call: TOLL FREE 1-800 227-2600
TWO WORKING DAYS BEFORE YOU DIG

PLANS PREPARED BY: adkan ENGINEERS
CIVIL ENGINEERING SURVEYING PLANNING
6920 AIRPORT DRIVE, RIVERSIDE, CA 92504
TEL: (909) 688-0241 FAX: (909) 688-0899
DATE: 1-14-03
UNDER THE SUPERVISION OF: R.C.E. 53390 6/30/07

BENCHMARK: E2-P2
CITY OF RIVERSIDE
CHISELED SQUARE ON THE TOP OF CURB AT THE WESTERLY END OF A CATCH BASIN FRONTING THE SOUTHERLY CURB OF INDIANA AVENUE AT THE SOUTHEAST CORNER OF INDIANA AVENUE AND FILLMORE STREET.
ELEVATION: 738.410

MARK	REVISIONS	APPR.	DATE
1	REVISED CURB & "X" GUTTER	RVZ	2-17-04

DESIGNED BY: RICK DRAWN BY: RICK CHECKED BY: C-

CITY OF RIVERSIDE
PUBLIC WORKS DEPARTMENT

APPROVED BY	DATE	BY
PRINCIPAL ENGINEER	12/11/03	
PARK DEPARTMENT	12/19/03	
TRAFFIC DIVISION	12/11/03	
STREET SERVICES	12/15/03	

APPROVED BY: Ken Bazel
CIVIL ENGINEER
DATE 12/11/03

STREET IMPROVEMENT PLAN
TRACT 31028
FILLMORE STREET STA 27+25.72 TO STA 31+11.90
ARIZONA AVENUE STA 24+00 TO STA 27+28.25
A.P.N. 136-030-003-8, 136-030-001-6 and 136-030-009-4
HORIZ. SCALE: 1" = 40' VERT. SCALE: 1" = 4'

PW03-0100
R-3726
SHEET 5 OF 8
J.N. 6371

File name: U:\DRAWING\MEEKER\6371\6371ST05

Plot date: 12/14/03
PC-4393-S

INDEXED 1-12-04

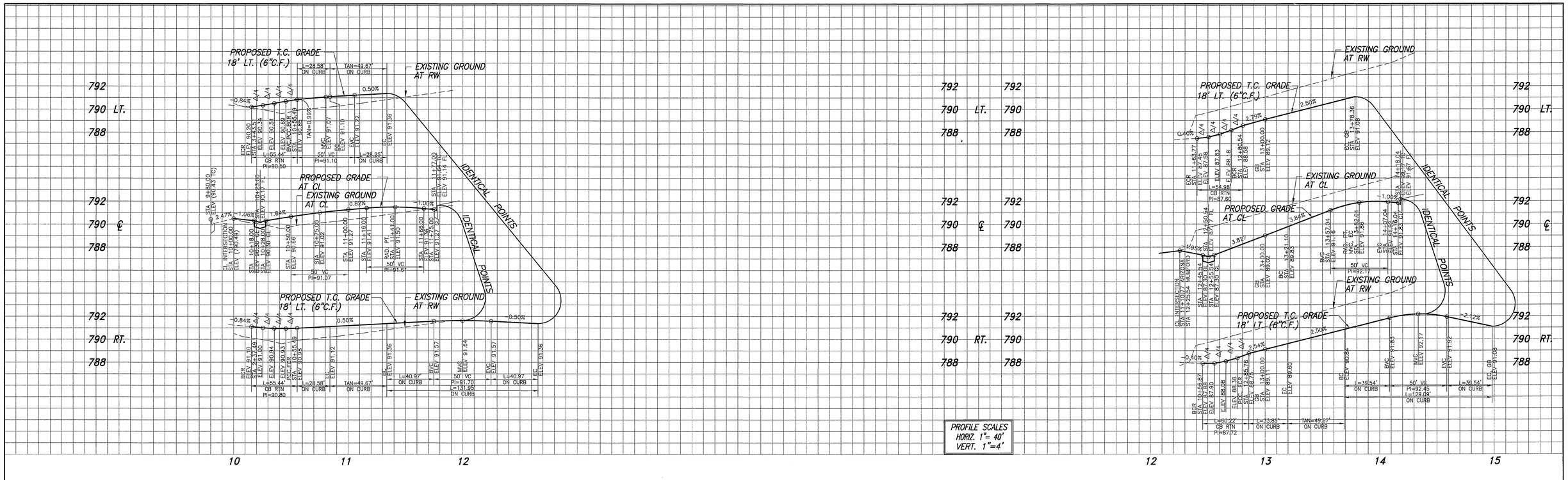

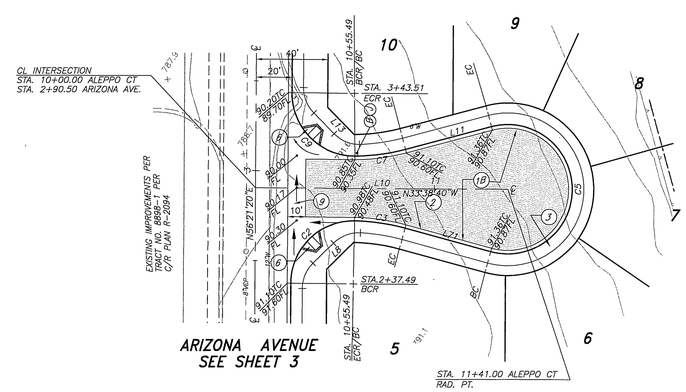

ALEPPO COURT

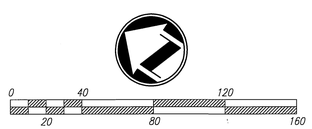

SCALE: 1" = 40'

LINE TABLE SHEET 6

NUMBER	DIRECTION	DISTANCE
L5	N 56°21'20" E	290.50'
L6	N 56°21'20" E	182.57'
L7	N 56°21'20" E	195.79'
L8	N 78°38'21" W	21.22'
L10	N 33°38'40" W	141.00'
L11	N 48°38'38" W	49.67'
L13	N 11°21'01" E	21.22'
L14	N 56°21'20" E	820.27'
L15	N 56°21'20" E	713.36'
L16	N 56°21'20" E	729.43'
L17	N 78°53'11" W	21.31'
L19	N 08°11'35" W	49.67'
L20	N 33°38'40" W	152.80'
L21	N 56°21'20" E	18.00'
L22	N 33°38'40" W	97.80'
L23	N 33°38'40" W	97.79'
L24	N 11°20'54" E	21.22'
L25	N 56°21'20" E	276.24'
L26	N 56°21'20" E	170.24'
L27	N 56°21'20" E	186.23'
L71	N 18°38'42" W	49.67'

CURVE TABLE SHEET 6

NUMBER	Δ =	R '	L '	T '
C2	90°45'28"	35.00	55.44	35.47
C3	14°14'30"	115.00	28.58	14.37
C4	14°24'28"	103.00	25.90	13.02
C5	209°59'56"	36.00	131.95	134.36
C7	14°14'30"	115.00	28.58	14.37
C8	14°24'28"	103.00	25.90	13.02
C9	90°45'28"	35.00	55.44	35.47
C10	98°35'03"	35.00	60.22	40.68
C11	16°52'02"	115.00	33.85	17.05
C13	205°27'05"	48.00	172.12	212.55
C14	205°27'05"	36.00	129.09	159.41
C15	90°00'00"	35.00	54.98	35.00
C56	34°54'55"	100.00	60.94	31.45

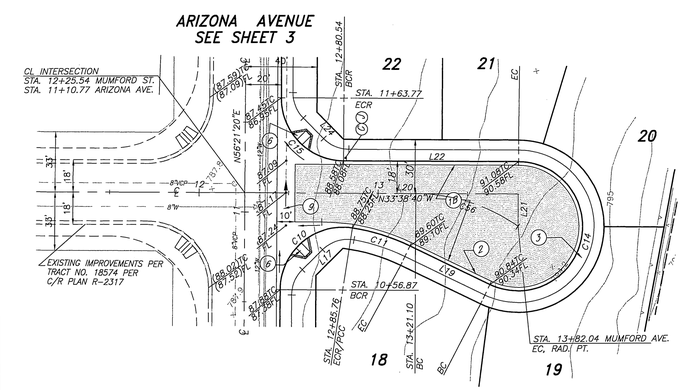

MUMFORD COURT

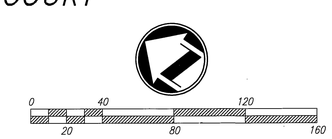

SCALE: 1" = 40'

REGISTERED PROFESSIONAL ENGINEER
CHARISSA J.A. LACH
NO. 53390
EXP. 6-30-07
CIVIL
STATE OF CALIFORNIA

CITY OF RIVERSIDE BUSINESS TAX ACCT.#058833 EXP.1/1/04

Underground Service Alert
Call: TOLL FREE
1-800 227-2600
TWO WORKING DAYS BEFORE YOU DIG

PLANS PREPARED BY:
adkan ENGINEERS
CIVIL ENGINEERING SURVEYING PLANNING
6820 AIRPORT DRIVE, RIVERSIDE, CA 92504
TEL: (909) 688-0241 FAX (909) 688-0599
DATE: 11-14-03
UNDER THE SUPERVISION OF: R.C.E. 53390 6/30/07

BENCHMARK: E2-P2
CITY OF RIVERSIDE
CHISELED SQUARE ON THE TOP OF CURB AT THE WESTERLY END OF A CATCH BASIN FRONTING THE SOUTHERLY CURB OF INDIANA AVENUE AT THE SOUTHEAST CORNER OF INDIANA AVENUE AND FILLMORE STREET.
ELEVATION: 738.410

MARK	REVISIONS	APPR.	DATE

DESIGNED BY: RICK DRAWN BY: RICK CHECKED BY: C-

CITY OF RIVERSIDE
PUBLIC WORKS DEPARTMENT

APPROVED BY	DATE	BY
PRINCIPAL ENGINEER	12/11/03	
PARK DEPARTMENT	11/17/03	
TRAFFIC DIVISION	12/11/03	
STREET SERVICES	11/17/03	

APPROVED BY
CIVIL ENGINEER
DATE 12/11/03

STREET IMPROVEMENT PLAN
PW03-0100

TRACT 31028
ALEPPO COURT STA 10+00.00 TO STA 11+77.00
MUMFORD AVENUE STA 12+25.54 TO STA 14+14.34
A.P.N. 136-030-003-8, 136-030-001-6 and 136-030-009-4

R-3726
SHEET 6 OF 8

HORIZ. SCALE: 1" = 40' VERT. SCALE: 1" = 4'
J.N. 6371

File name: U:\DRAWING\MEEKER\6371\6371ST06
Plot date: 1/14/03

INDEXED 1-12-04 LH

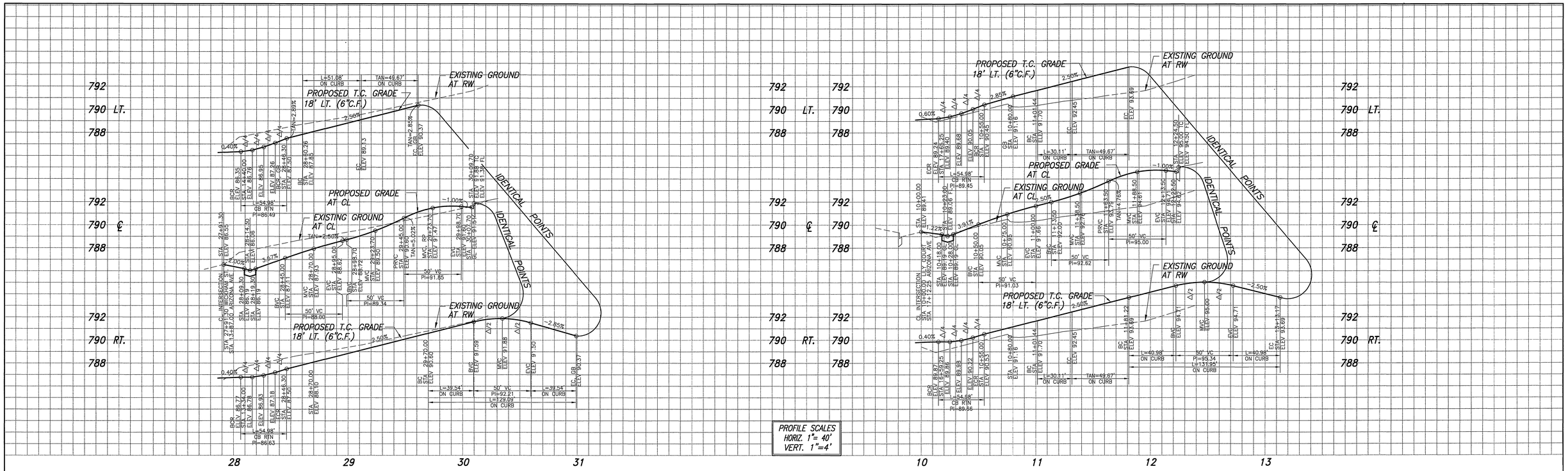

PROFILE SCALES
HORIZ. 1"= 40'
VERT. 1"=4'

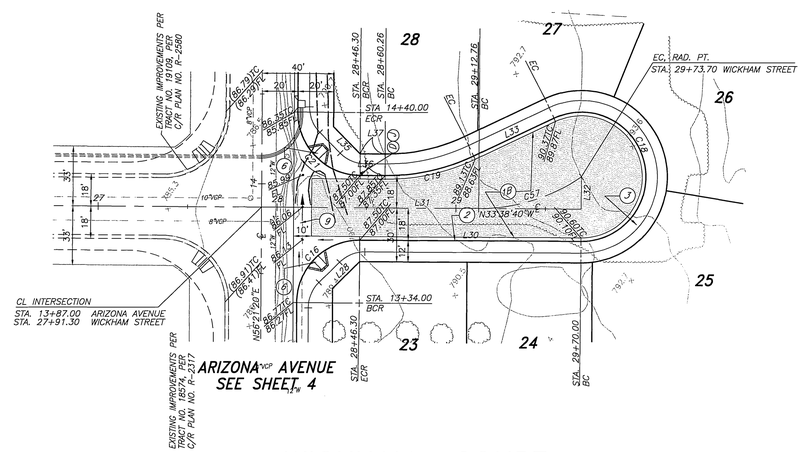

WICKHAM COURT

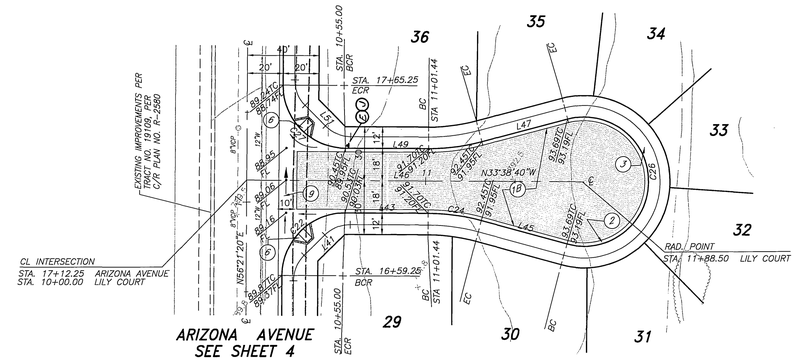

LILY COURT

LINE TABLE SHEET 7

NUMBER	DIRECTION	DISTANCE
L25	N 56°21'20" E	276.24'
L26	N 56°21'20" E	170.24'
L28	N 78°38'14" W	21.22'
L30	N 33°38'40" W	123.70'
L31	N 33°38'40" W	178.70'
L32	N 56°21'20" E	18.00'
L33	N 59°05'45" W	49.67'
L35	N 11°20'54" E	21.22'
L36	N 33°38'40" W	13.96'
L37	N 33°38'40" W	13.95'
L38	N 56°21'20" E	325.25'
L39	N 56°21'20" E	219.25'
L41	N 78°38'14" W	21.22'
L43	N 33°38'40" W	46.44'
L45	N 18°38'42" W	49.67'
L46	N 33°38'40" W	188.50'
L47	N 48°38'38" W	49.67'
L49	N 33°38'40" W	46.44'
L51	N 11°20'54" E	21.22'
L52	N 56°21'20" E	507.30'
L53	N 56°21'20" E	401.19'

CURVE TABLE SHEET 7

NUMBER	Δ =	R '	L '	T '
C16	90°00'00"	35.00	54.98	35.00
C18	205°27'04"	36.00	129.09	159.41
C19	25°27'05"	115.00	51.08	25.97
C21	90°00'00"	35.00	54.98	35.00
C22	90°00'00"	35.00	54.98	35.00
C24	14°59'58"	115.00	30.11	15.14
C26	209°59'57"	36.00	131.95	134.36
C27	90°00'00"	35.00	54.98	35.00
C57	34°54'55"	100.00	60.94	31.45

0 40 120
20 80 160
SCALE: 1" = 40'

REGISTERED PROFESSIONAL ENGINEER
CHARISSA J.A. LEACH
NO. 53390
EXP. 6-30-07
CIVIL
STATE OF CALIFORNIA

CITY OF RIVERSIDE BUSINESS TAX ACCT.#058833 EXP.1/1/04

Underground Service Alert
Call: TOLL FREE
1-800 227-2600
TWO WORKING DAYS BEFORE YOU DIG

PLANS PREPARED BY:
adkan ENGINEERS
CIVIL ENGINEERING SURVEYING PLANNING
6820 AIRPORT DRIVE, RIVERSIDE, CA 92504
TEL: (909) 689-0241 FAX: (909) 689-0599
DATE 11-12-03
UNDER THE SUPERVISION OF:
R.C.E. 53390 6/30/07

BENCHMARK: E2-P2
CITY OF RIVERSIDE
CHISELED SQUARE ON THE TOP OF CURB AT THE WESTERLY END OF A CATCH BASIN FRONTING THE SOUTHERLY CURB OF INDIANA AVENUE AT THE SOUTHEAST CORNER OF INDIANA AVENUE AND FILLMORE STREET.
ELEVATION: 738.410

MARK	REVISIONS	APPR.	DATE

DESIGNED BY: RICK DRAWN BY: RICK CHECKED BY: C-

CITY OF RIVERSIDE
PUBLIC WORKS DEPARTMENT

APPROVED BY	DATE	BY
PRINCIPAL ENGINEER	12/11/03	
PARK DEPARTMENT	12/19/03	
TRAFFIC DIVISION	12/11/03	
STREET SERVICES	12/11/03	

APPROVED BY
CIVIL ENGINEER
DATE 12/16/03

STREET IMPROVEMENT PLAN
TRACT 31028
WICKHAM STREET STA 27+91.30 TO STA 30+06.00
LILY COURT STA 10+00.00 TO STA 12+24.50
A.P.N. 136-030-003-8, 136-030-001-6 and 136-030-009-4
HORIZ. SCALE: 1" = 40' VERT. SCALE: 1" = 4'

PW03-0100
R-3726
SHEET 7 OF 8
J.N. 6371

File name: U:\DRAWING\MEEKER\6371\6371ST07

Pkg. date: 11/14/03
PC-4393-8

INDEXED 1-12-04 KH

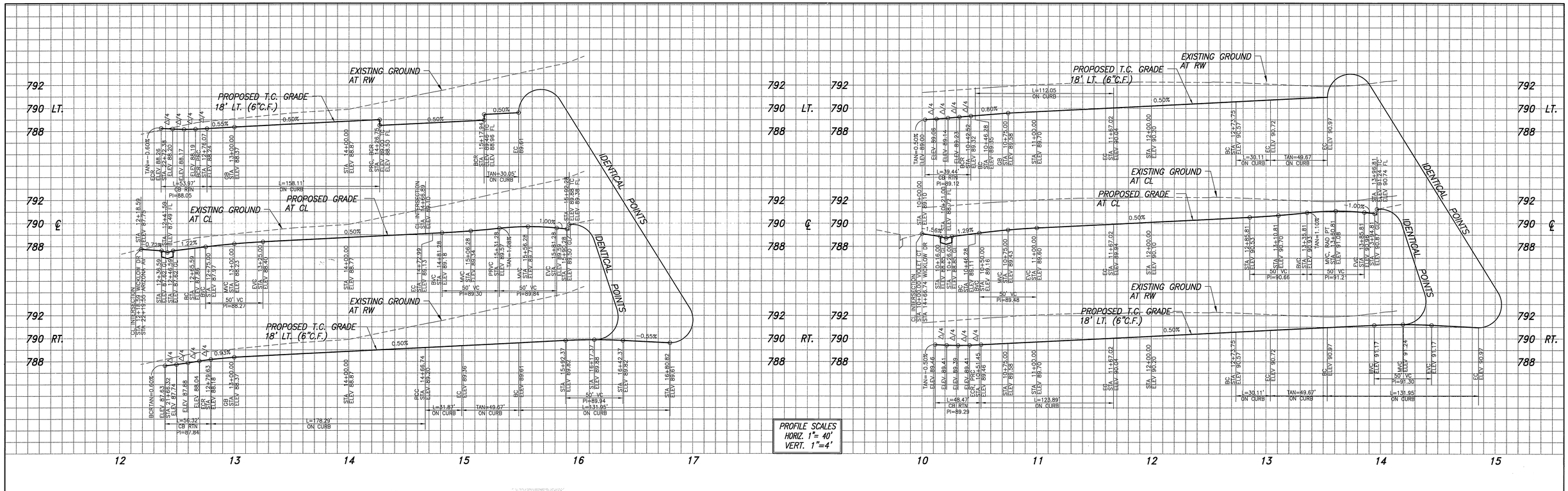

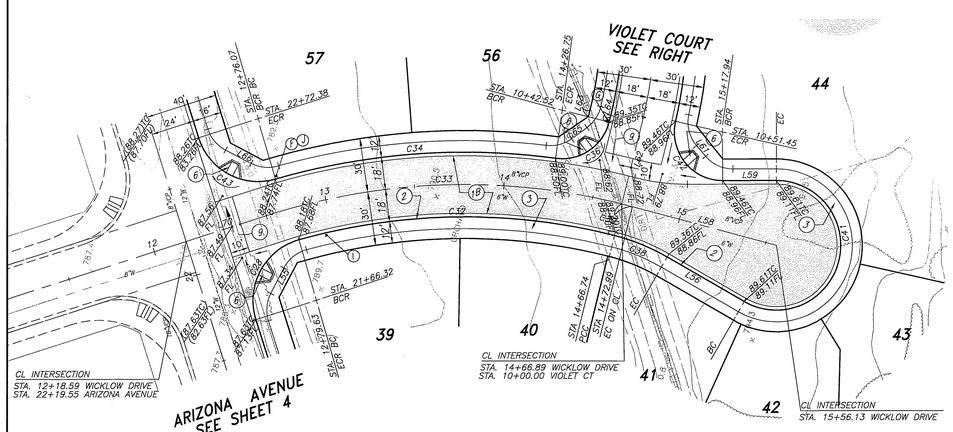

WICKLOW DRIVE

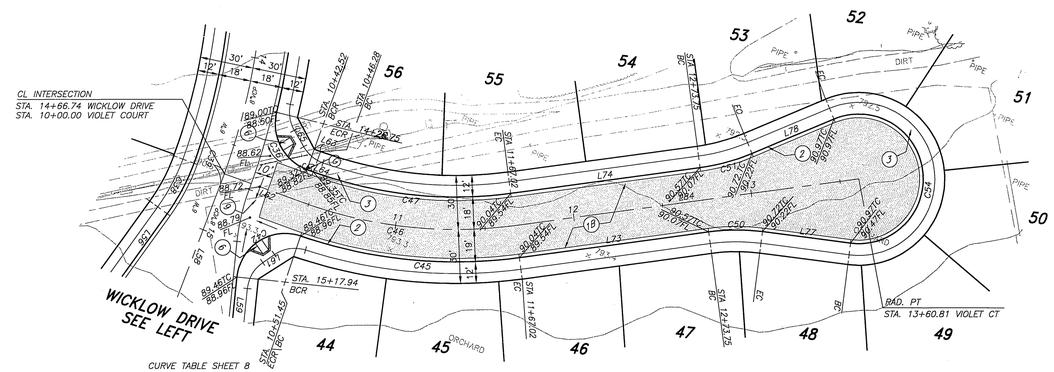

VIOLET COURT

LINE TABLE SHEET 8

NUMBER	DIRECTION	DISTANCE
L52	N 56°21'20" E	507.30'
L53	N 56°21'20" E	401.19'
L54	N 56°21'20" E	416.99'
L55	N 77°54'35" W	21.77'
L56	N 13°54'41" E	49.67'
L58	N 01°05'17" W	83.29'
L59	N 16°05'15" W	30.05'
L61	N 35°20'26" E	23.45'
L62	N 87°57'17" E	46.28'
L63	N 87°57'17" E	3.75'
L64	N 87°57'17" E	3.75'
L65	N 50°11'45" W	20.02'
L66	N 11°54'14" E	20.79'
L67	N 56°21'20" E	377.76'
L68	N 56°21'20" E	508.70'
L70	N 33°38'40" W	47.00'
L72	N 60°16'57" E	106.73'
L73	N 60°16'57" E	106.73'
L74	N 60°16'57" E	106.73'
L77	N 75°16'55" E	49.67'
L78	N 45°16'59" E	49.67'
L84	N 60°16'57" E	193.79'

CURVE TABLE SHEET 8

NUMBER	Δ =	R '	L '	T '
C28	92°12'15"	35.00	56.32	36.37
C32	29°26'21"	347.00	178.29	91.16
C33	31°35'52"	365.00	201.30	103.28
C34	33°39'10"	383.00	158.11	80.20
C36	83°41'55"	27.00	39.44	24.18
C38	15°52'52"	114.97	31.85	16.04
C39	00°57'25"	365.00	6.10	3.05
C41	209°59'56"	36.00	131.95	134.36
C42	102°51'23"	27.00	48.47	33.86
C43	88°21'18"	35.00	53.97	34.01
C45	26°29'10"	268.00	123.89	63.07
C46	22°57'24"	250.00	100.17	50.76
C47	27°40'20"	232.00	112.05	57.14
C50	14°59'58"	115.00	30.11	15.14
C51	14°59'58"	115.00	30.11	15.14
C54	209°59'57"	36.00	131.95	134.36
C55	90°00'52"	35.00	54.99	35.01

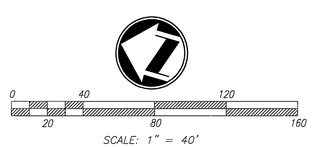

SCALE: 1" = 40'

REGISTERED PROFESSIONAL ENGINEER CHARLES A. J.K. ADKAN NO. 53390 EXP. 6-30-07 CIVIL STATE OF CALIFORNIA

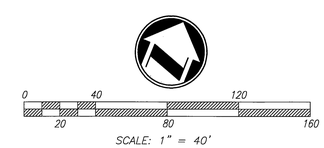

SCALE: 1" = 40'

CITY OF RIVERSIDE BUSINESS TAX ACCT.#058833 EXP.1/1/04

Underground Service Alert
CALL BEFORE YOU DIG
Call: TOLL FREE
1-800 227-2600
TWO WORKING DAYS BEFORE YOU DIG

PLANS PREPARED BY:
adkan ENGINEERS
CIVIL ENGINEERING SURVEYING PLANNING
6820 AIRPORT DRIVE, RIVERSIDE, CA 92504
TEL: (909) 698-0241 FAX. (909) 698-0599
DATE: 11-14-03
UNDER THE SUPERVISION OF:
R.C.E. 53390 6/30/07

BENCHMARK: E2-P2
CITY OF RIVERSIDE
CHISELED SQUARE ON THE TOP OF CURB AT THE WESTERLY END OF A CATCH BASIN FRONTING THE SOUTHERLY CURB OF INDIANA AVENUE AT THE SOUTHEAST CORNER OF INDIANA AVENUE AND FILLMORE STREET.
ELEVATION: 738.410

MARK	REVISIONS	APPR.	DATE

DESIGNED BY: RICK DRAWN BY: RICK CHECKED BY: C-

CITY OF RIVERSIDE
PUBLIC WORKS DEPARTMENT

APPROVED BY	DATE	BY
PRINCIPAL ENGINEER	12/11/03	
PARK DEPARTMENT	12/12/03	
TRAFFIC DIVISION	12/11/03	
STREET SERVICES	11/14/	0004

APPROVED BY
CIVIL ENGINEER
DATE 12/16/03

STREET IMPROVEMENT PLAN
TRACT 31028
WICKLOW DRIVE STA 12+18.59 TO STA 15+56.13
VIOLET STREET STA 10+00.00 TO STA 13+60.81
A.P.N. 136-030-003-8, 136-030-001-6 and 136-030-009-4
HORIZ. SCALE: 1" = 40' VERT. SCALE: 1" = 4'

PW03-0100
R-3726
SHEET 8 OF 8
J.N. 6371

Plot date: 11/14/03
PC-4393-S

File name: U:\DRAWING\MEEKER\6371\6371ST08

INDEXED 1-12-04 GH