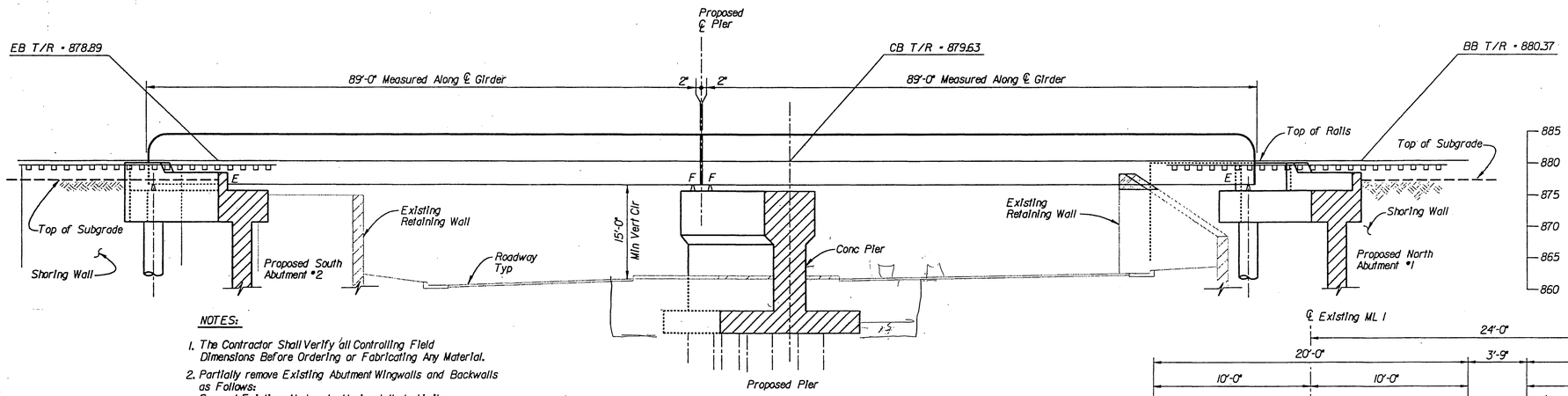

SECTION ALONG ℄ OF TRACK

Scale: 1" = 10'
(Existing Bridge Not Shown for Clarity)

NOTES:

1. The Contractor Shall Verify all Controlling Field Dimensions Before Ordering or Fabricating Any Material.
2. Partially remove Existing Abutment Wingwalls and Backwalls as Follows:
   Saw-cut Existing Abutments Horizontally to Limits Shown on Plan View and ABUTMENT DETAILS Sheets.
   Grind resulting Surfaces smooth. Burn Back Exposed reinforcing 1/2 inch and Grout resulting recesses. Chamfer all Exposed Concrete Edges 3/4".
3. Stations are Approximate. The Location of the Proposed Bridge Shall be such that the Existing Bridge Pier Centerline and Proposed Bridge Pier Centerline Align as shown in the Plans.
4. Portion of Shoring Wall to Remain in Place. Shoring Walls are to be Designed by Contractor.

SHEET INDEX

S-1 General Arrangement
S-2 Abutment Details No 1
S-3 Abutment Details No 2
S-4 Abutment Details No 3
S-5 Abutment Details No 4
S-6 Abutment Details No 5
S-7 Pier Details
S-8 Framing Plan
S-9 Girder Details No 1
S-10 Girder Details No 2
S-11 Girder Details No 3
S-12 Girder Details No 4
S-13 Bearing Details
S-14 Inspection Facilities Details
S-15 Waterproofing Details
S-16 Geoweb Retaining Wall Plan and Details
S-17 General Notes & Quantities
S-18 Log of Test Borings

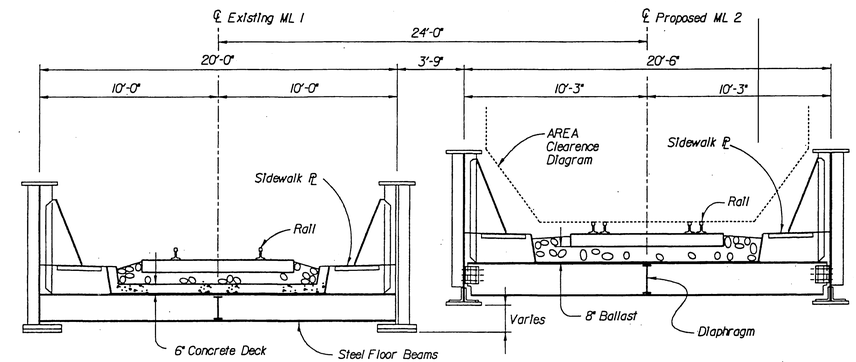

SECTION (A)

Scale: 1/4" = 1'-0"

LEGEND

F = Fixed End
E = Expansion End
BB = Begin Bridge
EB = End Bridge
CB = Center Bridge
⊕ = Min Vertical Clr

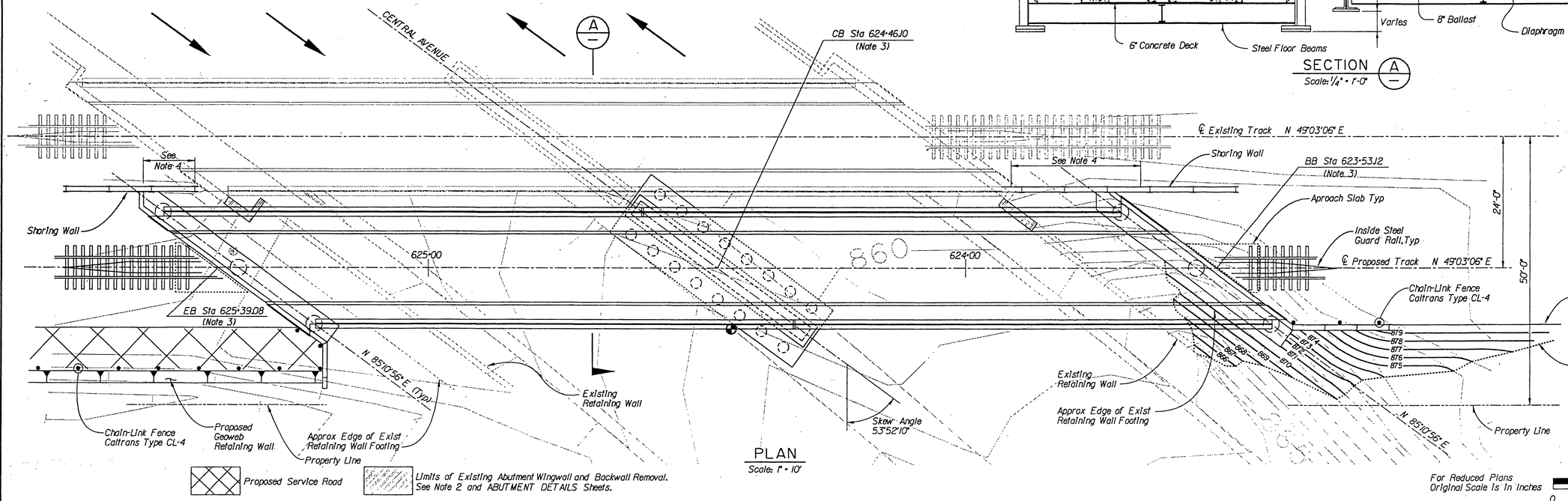

PLAN

Scale: 1" = 10'

RECEIVED
FEB 28 1995
DEPT. OF PUBLIC WORKS

For Reduced Plans Original Scale Is In Inches
0 1" 2" 3"

Issue No.	Description	Date	Drwn.	Chkd.	Resp. Engr.	Proj. Mgr.

HDR
HDR Engineering, Inc.

REGISTERED PROFESSIONAL ENGINEER No. 21689 Exp. 6-30-95 CIVIL STATE OF CALIFORNIA

Designed By	TDL
Drawn By	PZ
Checked By	HS
Approved By	JMJ
Date	07-15-1994

ATCHISON, TOPEKA & SANTA FE RAILWAY COMPANY

CENTRAL AVENUE UNDERPASS GENERAL ARRANGEMENT

R-3944

Scale	Project No.	Drawing No.	Sheet
AS NOTED	06791	S-1	1 of 18

FILE: c:\06791\016\central01.dgn
DATE: 9-Aug-94 07:09

INDEXED 6-08-06

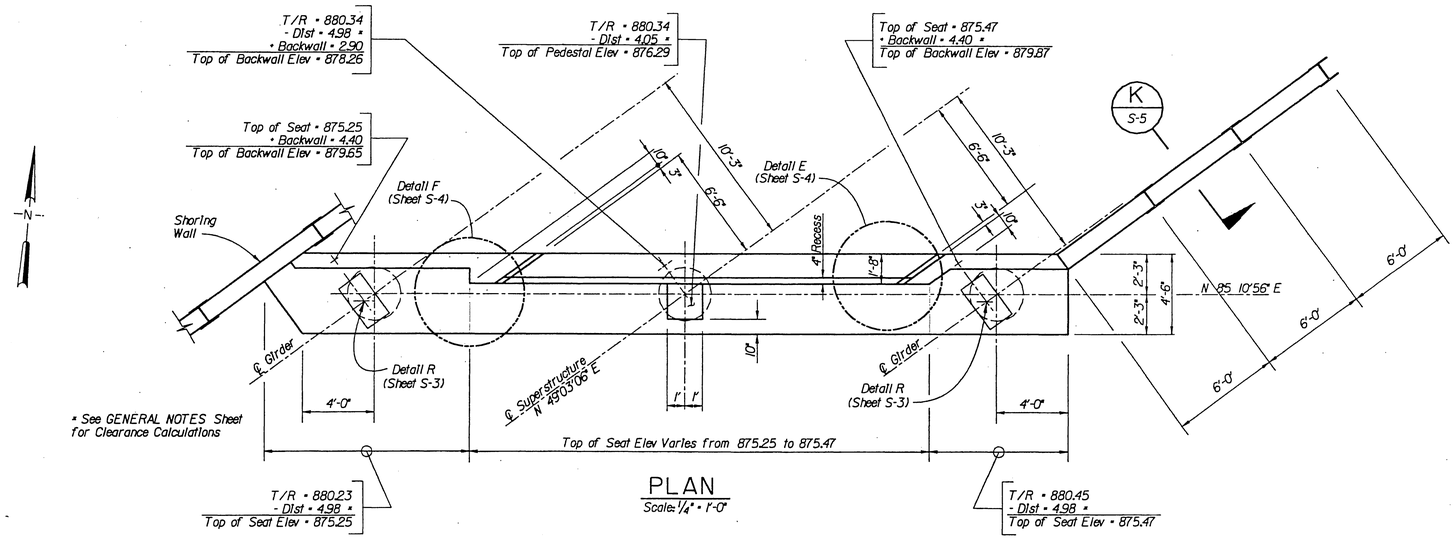

PLAN

Scale: 1/4" = 1'-0"

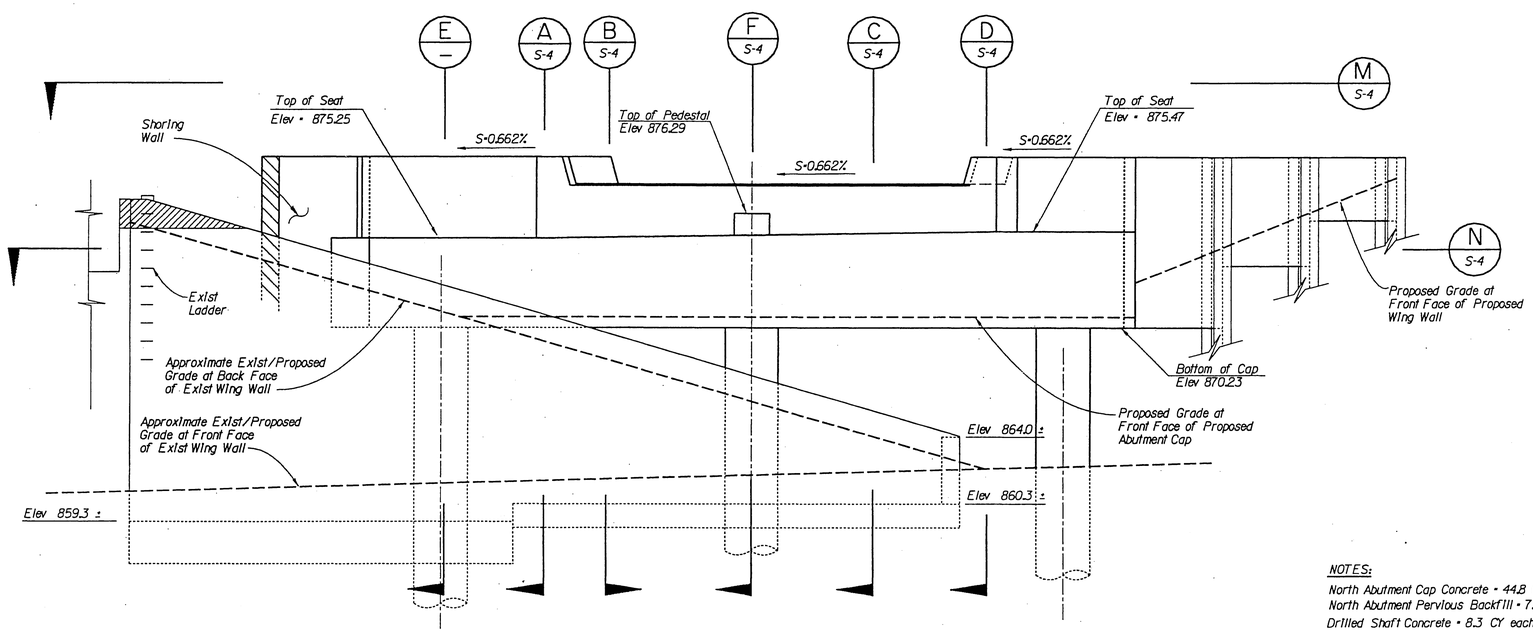

Limits of Existing Abutment and Backwall removal.
See Note 2 and GENERAL ARRANGEMENT Sheet.

ELEVATION - NORTH ABUTMENT

Scale: 1/4" = 1'-0"

NOTES:

1. The Contractor Shall Verify all Controlling Field Dimensions Before Ordering or Fabricating any Material.
2. Partially Remove Existing North Abutment Wingwall and Backwall as Follows:
   Saw-cut Existing Abutments Horizontally at Elevation 879.00 to Limits Shown on Elevation View and GENERAL ARRANGEMENT Sheet. Grind Resulting Surfaces Smooth. Burn Back Exposed Reinforcing and Grout Resulting Recesses. Chamfer all Exposed Concrete Edges 3/4".

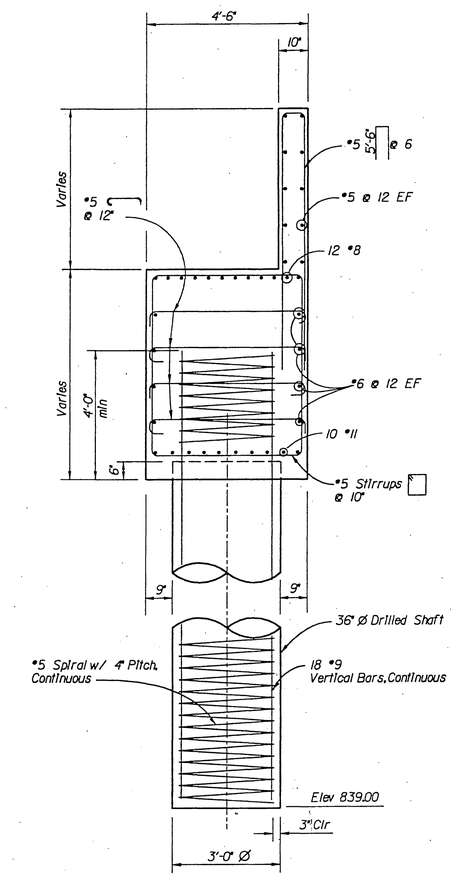

SECTION E

Scale: 1/2" = 1'-0"

NOTES:

North Abutment Cap Concrete = 44.8 CY
North Abutment Pervious Backfill = 7.4 CY
Drilled Shaft Concrete = 8.3 CY each (North Abutment)

RECEIVED
FEB 28 1995
DEPT. OF PUBLIC WORKS

For Reduced Plans
Original Scale Is In Inches
0 1" 2" 3"

Issue No.	Description	Date	Drwn.	Chkd.	Resp. Engr.	Proj. Mgr.

HDR
HDR Engineering, Inc.

6-30-95

Designed By	TDL
Drawn By	PZ
Checked By	HS
Approved By	JMJ
Date	07-15-1994

ATCHISON, TOPEKA & SANTA FE RAILWAY COMPANY

CENTRAL AVENUE UNDERPASS ABUTMENT DETAILS NO. 1

(NORTH ABUTMENT DETAILS) R-3944

Scale	Project No.	Drawing No.	Sheet
AS NOTED	06791	S-2	2 of 18

INDEXED 6-08-06 GH

FILE: c:\06791\016\centro02.dgn
DATE: 9-Aug-94 07:20

NOTES:

1. The Contractor Shall Verify all Controlling Field Dimensions Before Ordering or Fabricating any Material.
2. Partially Remove Existing South Abutment Wingwall and Backwall as Follows:
   Saw-cut Existing Abutments Horizontally at Elevation 878.00 to Limits Shown on Elevation View and GENERAL ARRANGEMENT Sheet. Grind Resulting Surfaces Smooth. Burn Back Exposed Reinforcing and Grout Resulting Recesses. Chamfer all Exposed Concrete Edges 3/4".
3. Place one foot of Pervious Backfill Material Continuous behind Abutment and Wingwall.

* See GENERAL NOTES Sheet for Clearance Calculations

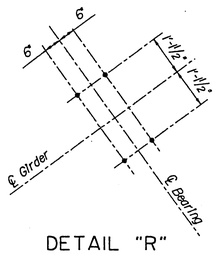

DETAIL "R"
ANCHOR BOLT LAYOUT
Scale: 1/2" = 1'-0"

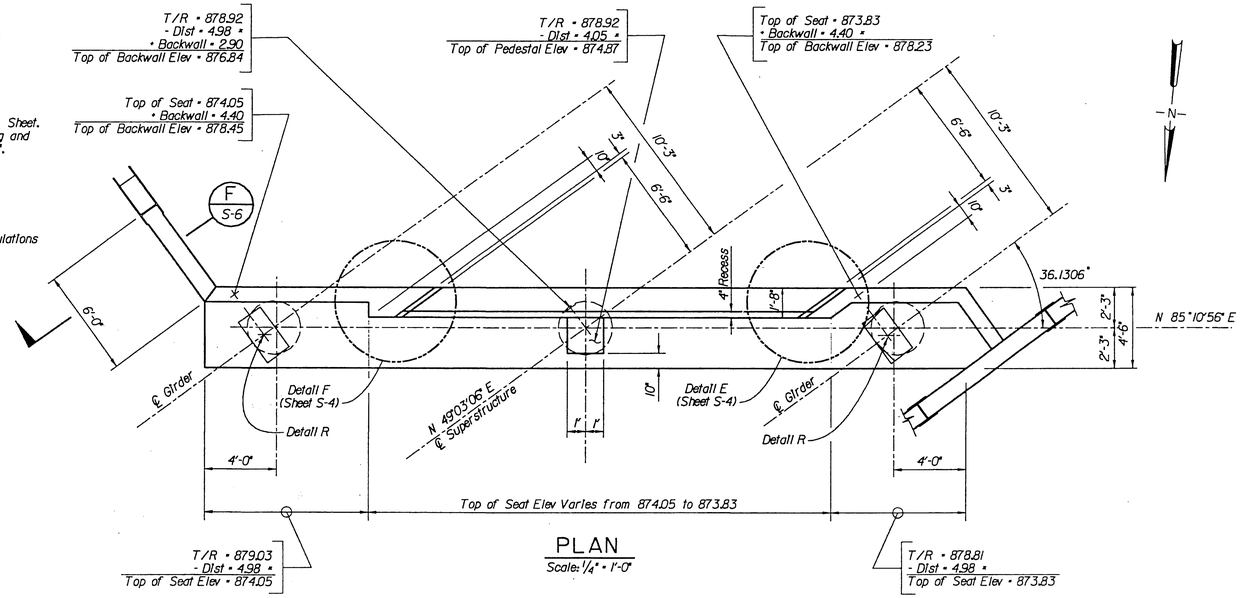

PLAN
Scale: 1/4" = 1'-0"

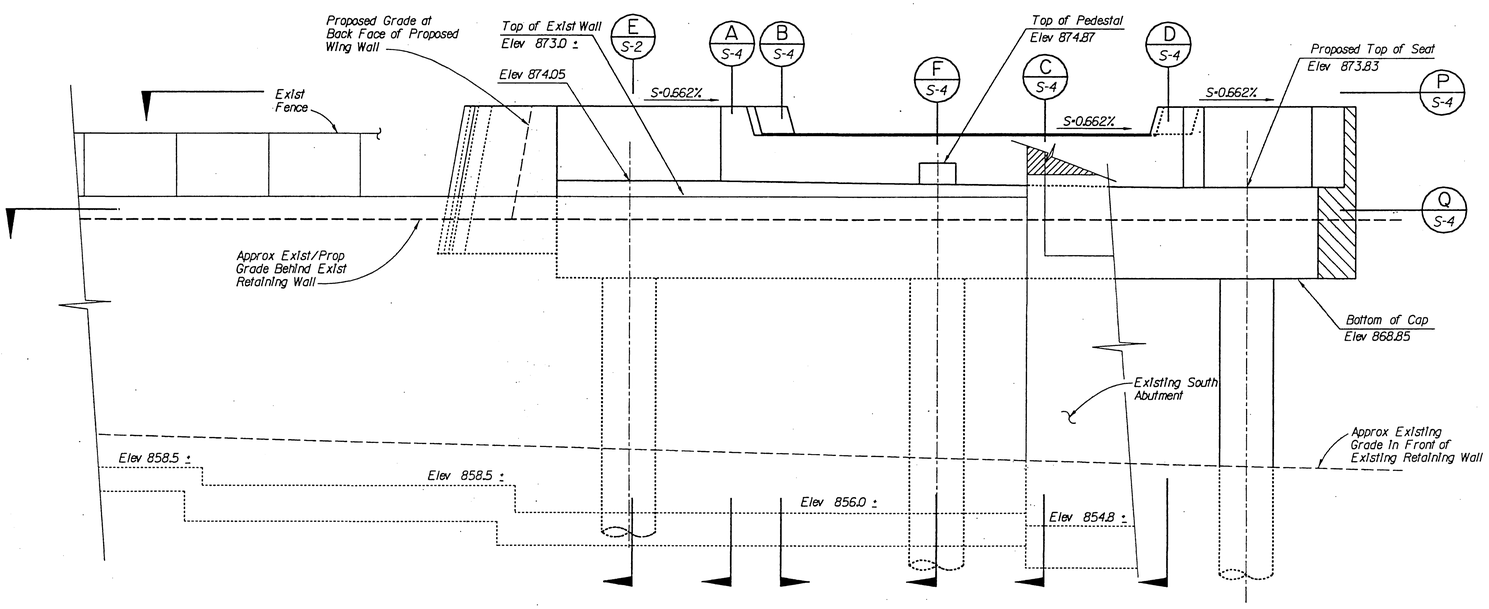

Limits of Existing Abutment and Backwall removal. See Note 2 and GENERAL ARRANGEMENT Sheet.

ELEVATION - SOUTH ABUTMENT
Scale: 1/4" = 1'-0"

South Abutment Cap Concrete = 45.1 CY
South Abutment Pervious Backfill = 5.2 CY
South Abutment Drilled Shaft Concrete = 8.0 CY

FOR INFORMATION ONLY						
ITEM : EACH ABUTMENT						
QTY	BAR SIZE (#)	NOTE	BAR TYPE *	BAR LENGTH (FT - IN)	BAR UNIT WEIGHT (LB / LF)	TOTAL WEIGHT (LB)
40	5		0-8 / 8-8 (BW)	11'-8"	1.043	487
54	5		0-8 / 4-0 (BW)	8'-8"	1.043	488
1	4	1	ST-H-BW	23'-0"	0.668	15
1	5	2	ST-V-BW	78'-0"	1.043	81
1	5	3	ST-H-BW	453'-0"	1.043	472
3	5		1-4 / 8-8 (BW)	12'-4"	1.043	39
12	8	4	ST-H-TC-NL	44'-6"	2.67	1426
10	11	4	ST-H-BC-NL	44'-6"	5.31	2363
180	5		4-2 / 0-4½ / 0-8½	5'-0¾"	1.043	6446
8	6	4	ST-H-SC	43'-0"	1.502	517
1	5	5	ST-H-EC	86'-0"	1.043	90
5	6		3-0 / 2-0 (P)	5'-0"	1.502	38
5	6		1-8 / 2-0 (P)	5'-8"	1.502	43
53	5		4-2 / 4-8	18'-2"	1.502	1446
TOTAL PER ABUTMENT						13951
TOTAL FOR BOTH ABUTMENTS						27902

* ST= STRAIGHT BAR
V = VERTICAL BAR
H = HORIZONTAL BAR
BW= BAR LOCATED IN BACKWALL
P = PEDESTAL BAR
TC= TOP OF ABUT CAP BAR
BC= BOTTOM OF ABUT CAP BAR
SC= SIDE FACES OF ABUT CAP BAR
EC= END FACES OF ABUT CAP BAR
NL= NO LAP SPLICE PERMITTED
BAR DIMENSIONS SHOWN ON DIAGRAMS ARE OUT-TO-OUT

NOTES:

1. FIELD CUT / BEND FOR 0-8 / 0-8 AND 0-8 / 0-8 BARS (SHOWN IN VIEW "M" AND VIEW "P" ON ABUTMENT DETAILS NO.3 SHEET)
2. FIELD CUT / BEND FOR 0-8 / 0-8 AND 0-8 / 0-8 BARS (SHOWN IN DETAIL "E" AND DETAIL "F" ON ABUTMENT DETAILS NO.3 SHEET)
3. FIELD CUT / BEND BACKWALL LONGITUDINAL BARS (SHOWN IN SECTION "A", "B", "C", "D", AND "F"; VIEWS "M" AND "P", AND DETAILS "E" AND "F" ON ABUTMENT DETAILS NO.1 AND NO.3 SHEETS
4. FIELD CUT LONGITUDINAL BENT CAP BARS TO FIT
5. FIELD CUT / BEND FOR 1-0 / 4-2 / 1-0 AND 1-0 / 4-2 / 1-0 BARS (SHOWN IN SECTIONS "N" AND "Q" ON ABUTMENT DETAILS NO.3 SHEET)

FOR INFORMATION ONLY						
ITEM : 36" DRILLED SHAFT						
QTY	BAR SIZE (#)	BAR TYPE *	NOTE	BAR LENGTH (FT - IN)	BAR UNIT WEIGHT (LB / LF)	TOTAL WEIGHT (LB)
18	9	ST-V-NL		35'-6"	3.40	2173
1	5	S		888'-0"	1.043	926
TOTAL FOR EACH DRILLED SHAFT						3099
TOTAL FOR 6 DRILLED SHAFTS (BOTH ABUTS)						18594

* ST= STRAIGHT BAR
V = VERTICAL BAR
S = #5 CONTINUOUS SPIRAL AT 4" PITCH, D = 32" OUT-TO-OUT
NL= NO LAP SPLICE PERMITTED
BAR DIMENSIONS SHOWN ON DIAGRAMS ARE OUT-TO-OUT

RECEIVED FEB 28 1995 DEPT. OF PUBLIC WORKS

For Reduced Plans
Original Scale Is In Inches
0 1" 2" 3"

Issue No.	Description	Date	Drwn.	Chkd.	Resp. Engr.	Proj. Mgr.

HDR
HDR Engineering, Inc.

Reviewed by 6-30-94

Designed By	TDL
Drawn By	PZ
Checked By	HS
Approved By	JMJ
Date	07-15-1994

ATCHISON, TOPEKA & SANTA FE RAILWAY COMPANY

CENTRAL AVENUE UNDERPASS ABUTMENT DETAILS NO. 2

(SOUTH ABUTMENT DETAILS) R-3944

Scale	Project No.	Drawing No.	Sheet
AS NOTED	06791	S-3	3 of 18

FILE: c:\06791\016\centra03.dgn
DATE: 9-Aug-94 07:30

INDEXED 6-08-06 LCWINGO4

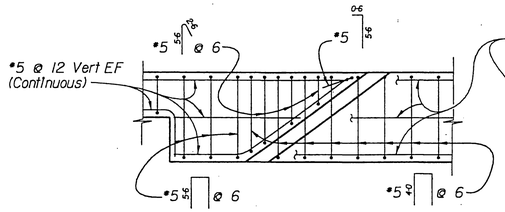

DETAIL "F"
Scale: 3/4" = 1'
Note: 4" x 1/2" Recess not Shown for Clarity

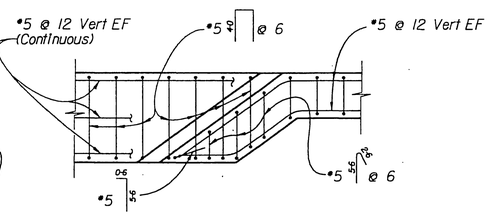

DETAIL "E"
Scale: 3/4" = 1'
Note: 4" x 1/2" Recess not Shown for Clarity

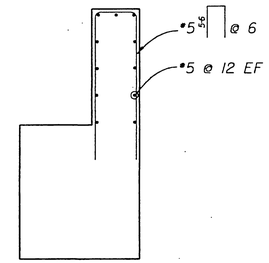

SECTION A
Scale: 3/8" = 1'

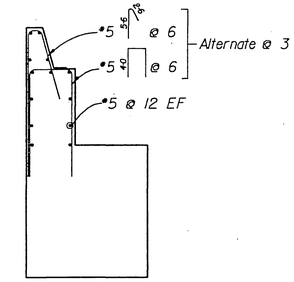

SECTION B
Scale: 3/8" = 1'

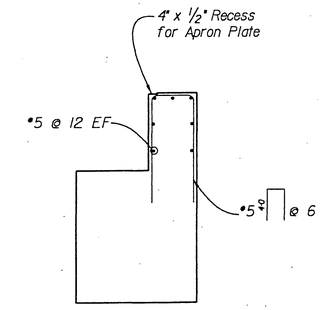

SECTION C
Scale: 3/8" = 1'

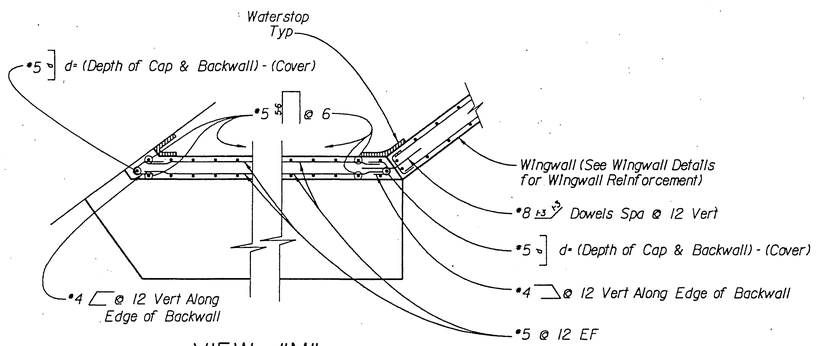

VIEW "M"
Scale: 3/8" = 1'

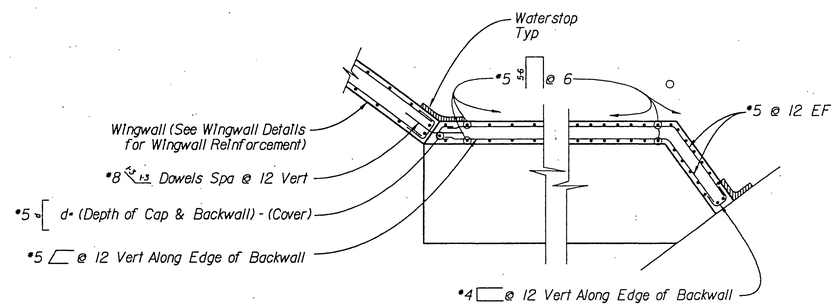

VIEW "P"
Scale: 3/8" = 1'

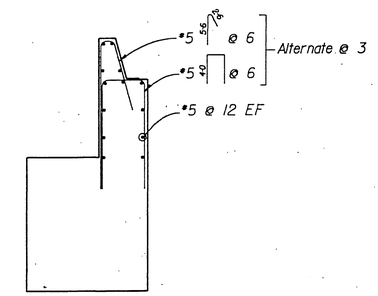

SECTION D
Scale: 3/8" = 1'

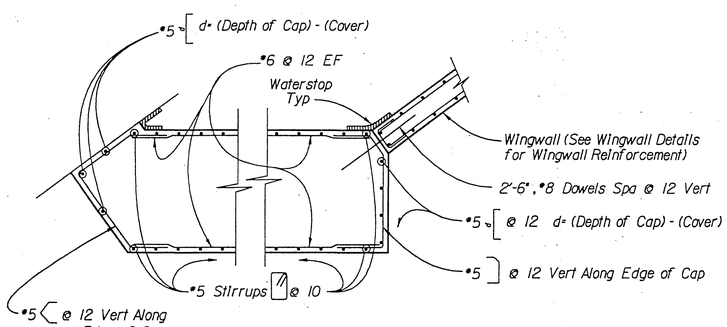

SECTION "N"
Scale: 3/8" = 1'

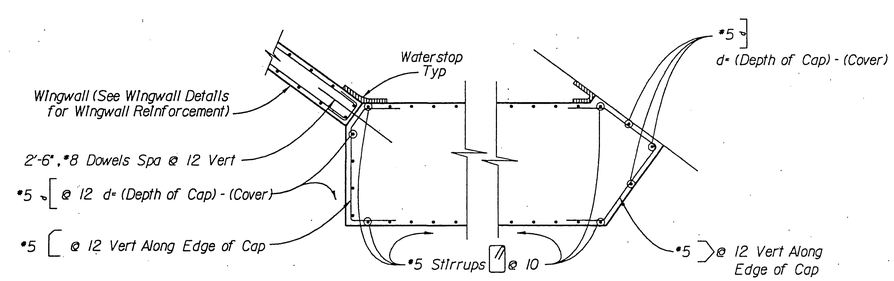

SECTION Q
Scale: 3/8" = 1'

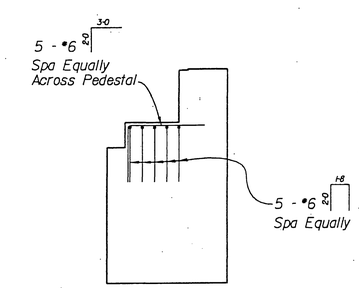

SECTION F
Scale: 3/8" = 1'

RECEIVED
FEB 28 1995
DEPT. OF PUBLIC WORKS

For Reduced Plans
Original Scale Is In Inches
0 1" 2" 3"

Issue No.	Description	Date	Drwn.	Chkd.	Resp. Engr.	Proj. Mgr.

HDR
HDR Engineering, Inc.

Designed By	TDL/EH
Drawn By	PZ
Checked By	HS
Approved By	JMJ
Date	07-15-1994

ATCHISON, TOPEKA & SANTA FE RAILWAY COMPANY

CENTRAL AVENUE UNDERPASS ABUTMENT DETAILS NO. 3
(SECTIONS)

R-3944

Scale	Project No.	Drawing No.	Sheet
AS NOTED	06791	S-4	4 of 18

FILE: c:\06791\016\centra04.dgn
DATE: 4-Aug-94 09:37

INDEXED 6-08-06 LH

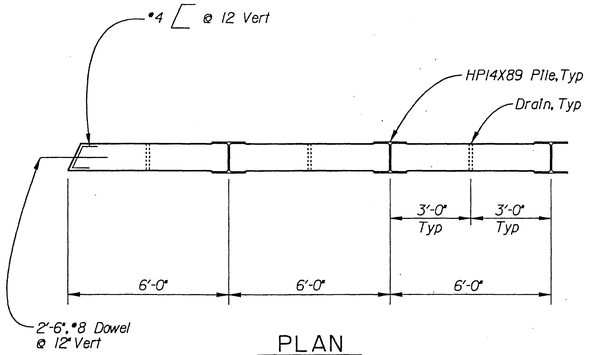

PLAN

Scale: 3/8" = 1'

Note: Other Reinforcement Not Shown for Clarity

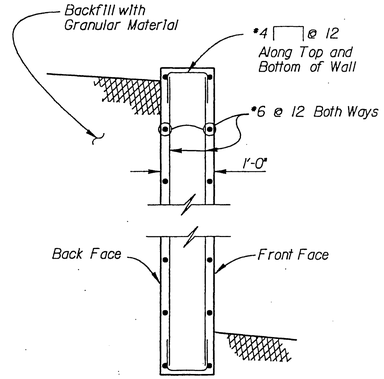

SECTION K

Scale: 3/4" = 1'

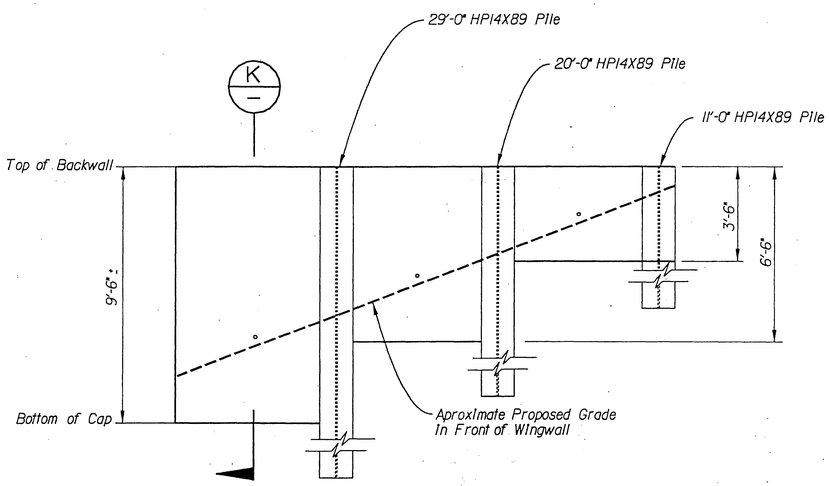

FRONT ELEVATION

Scale: 3/8" = 1'

Concrete = 4.3 CY
HP14X89 Piling = 60 LF
Pervious Backfill = 2.7 CY

FOR INFORMATION ONLY					
ITEM : NORTH ABUTMENT WINGWALL					
QTY	BAR TYPE (#)	BAR TYPE ×	BAR LENGTH (FT - IN)	BAR UNIT WEIGHT (LB / LF)	TOTAL WEIGHT (LB)
32	4	0.8 0.8 0.8 0.8	2'-0"	0.668	43
14	6	ST - V	9'-2"	1.502	193
14	6	ST - V	6'-2"	1.502	143
14	6	ST - V	3'-2"	1.502	67
42	6	ST - H	5'-8"	1.502	358
3	8	1.3" 5" 5.3" H-D	2'-6"	2.67	20
7	8	ST-H-D	2'-6"	2.67	48
TOTAL					870

× D = DOWEL BAR
ST= STRAIGHT BAR
V = VERTICAL BAR
H = HORIZONTAL BAR

BAR DIMENSIONS SHOWN ON DIAGRAMS ARE OUT-TO-OUT

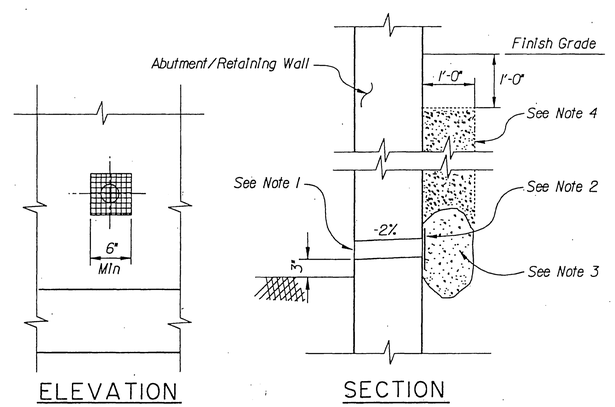

ELEVATION SECTION

DRAINAGE DETAILS

Not To Scale

Drainage Notes:

1. Exposed Wall Drains Shall be Located 3" ± Above Finished Grade.
2. 6" Square Aluminum or Galvanized Steel Wire 1/4" Mesh Hardware Cloth. (Min. Wire Diameter = 0.025") Anchor Firmly to Backface.
3. One Cubic Foot of Pervious Backfill Material in a Burlap Sack, Securely Tied.
4. Place Pervious Backfill Material Continuous Behind Wingwall and Abutment.

RECEIVED
FEB 28 1995
DEPT. OF PUBLIC WORKS

For Reduced Plans Original Scale Is In Inches 0 1" 2" 3"

Issue No.	Description	Date	Drwn.	Chkd.	Resp. Engr.	Proj. Mgr.

HDR Engineering, Inc.

6-28-95

Designed By	TDL/EH
Drawn By	PZ
Checked By	HS
Approved By	JMJ
Date	07-15-1994

ATCHISON, TOPEKA & SANTA FE RAILWAY COMPANY

CENTRAL AVENUE UNDERPASS ABUTMENT DETAILS NO. 4
(NORTH ABUTMENT WINGWALL DETAILS)

Scale	Project No.	Drawing No.	Sheet
AS NOTED	06791	S-5	5 of 18

R-3944

INDEXED 6-08-06 GH

FILE: c:\06791\016centra05.dgn
DATE: 9-Aug-94 07:34

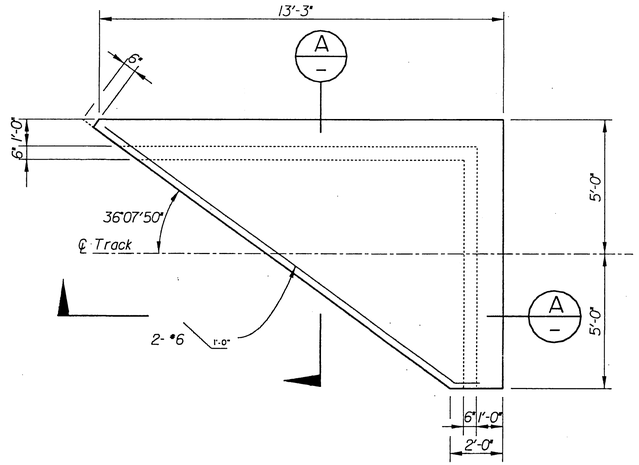

APPROACH SLAB

Scale: 3/8" = 1'

Concrete = 6.2 CY each

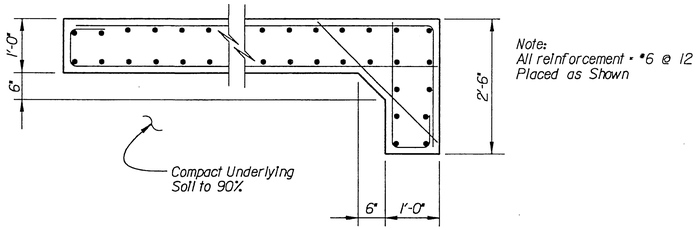

SECTION A

Scale: 3/4" = 1'

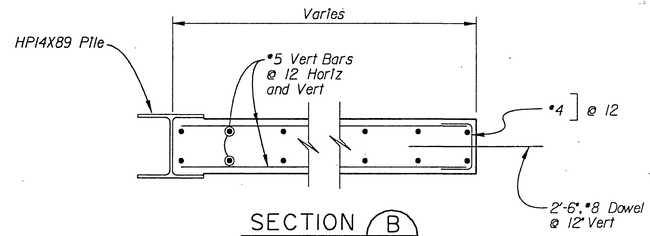

SECTION B

Scale: 3/4" = 1'

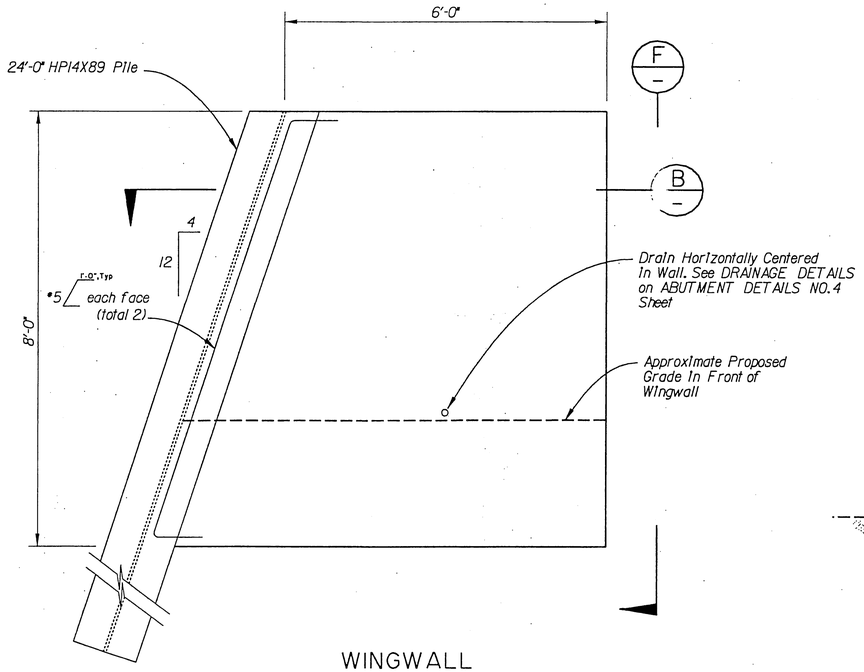

WINGWALL

Scale: 3/4" = 1'

Concrete = 2.2 CY

HP14X89 Piling = 24 LF

Pervious Backfill = 1.6 CY

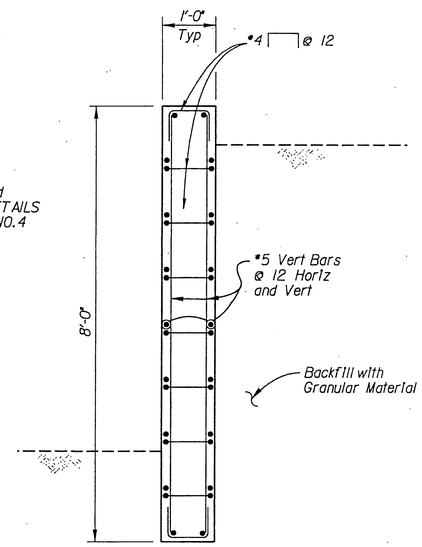

VIEW F

Scale: 3/4" = 1'

NOTE:
Chamfer all Exposed Concrete
and Steel Edges 3/4"

FOR INFORMATION ONLY

ITEM : SOUTH ABUTMENT WINGWALL

QTY	BAR SIZE (#)	BAR TYPE ×	BAR LENGTH (FT - IN)	BAR UNIT WEIGHT (LB / LF)	TOTAL WEIGHT (LB)
14	5	ST - V	7'-8"	1.043	112
2	5	ST - V	4'-8"	1.043	10
2	5	ST - V	1'-8"	1.043	3
2	5	ST - H	8'-4"	1.043	17
2	5	ST - H	8'-0"	1.043	17
2	5	ST - H	7'-8"	1.043	16
2	5	ST - H	7'-4"	1.043	15
2	5	ST - H	7'-0"	1.043	15
2	5	ST - H	6'-8"	1.043	14
2	5	ST - H	6'-4"	1.043	13
2	5	ST - H	6'-0"	1.043	13
2	5	ST - H	5'-8"	1.043	12
22	4	1.0 1.0 0.8	2'-8"	0.668	39
2	5	1 3 1.0 1.0	10'-0"	1.043	21
3	8	1.3 1.3 36" H-D	2'-6"	2.67	20
5	8	ST - H-D	2'-6"	2.67	33
TOTAL					370

× D = DOWEL BAR
ST= STRAIGHT BAR
V = VERTICAL BAR
H = HORIZONTAL BAR

BAR DIMENSIONS SHOWN ON DIAGRAMS ARE OUT-TO-OUT

FOR INFORMATION ONLY

ITEM : APPROACH SLABS

QTY	BAR SIZE (#)	BAR TYPE ×	NOTE	BAR LENGTH (FT - IN)	BAR UNIT WEIGHT (LB / LF)	TOTAL WEIGHT (LB)
8	6	ST - T		9'-8"	1.502	116
8	6	ST - L		18'-8"	1.502	224
54	6	ST - T		3'-0"	1.502	243
6	6	9-8 (T) 2-2		11'-10"	1.502	107
18	6	2-2 9-8 (T) 2-2	1	14'-0"	1.502	379
11	6	2-2 18-8 2-2	1	23'-0"	1.502	380
6	6	0-8 0-8 9-8		11'-0"	1.502	99
18	6	0-8 0-8 0-8 9-8 0-8	1	12'-4"	1.502	333
11	6	0-8 0-8 0-8 18-8 0-8	1	21'-4"	1.502	352
62	6	2-2 0-8 0-8 (TOEWALL)		3'-6"	1.502	326
2	6	1.0		17'-0"	1.502	51
TOTAL						2610

× ST= STRAIGHT BAR
T = TRANSVERSE BAR
L = LONGITUDINAL BAR

NOTE 1: FIELD CUT LONG SIDE TO FIT.
PLACE REMAINDER IN OTHER APROACH SLAB

BAR DIMENSIONS SHOWN ON DIAGRAMS ARE OUT-TO-OUT

RECEIVED
FEB 28 1995
DEPT. OF PUBLIC WORKS

For Reduced Plans
Original Scale Is In Inches
0 1" 2" 3"

Issue No.	Description	Date	Drwn.	Chkd.	Resp. Engr.	Proj. Mgr.

HDR Engineering, Inc.

Designed By	TDL/EH
Drawn By	PZ
Checked By	HS
Approved By	JMJ
Date	07-15-1994

ATCHISON, TOPEKA & SANTA FE RAILWAY COMPANY

CENTRAL AVENUE UNDERPASS ABUTMENT DETAILS NO.5

(SOUTH ABUTMENT WINGWALL DETAILS AND APPROACH SLAB DETAILS) R-3944

Scale	Project No.	Drawing No.	Sheet
AS NOTED	06791	S-6	6 of 18

FILE: c:\06791\016\centra06.dgn
DATE: 4-Aug-94 09:45

INDEXED 6-08-06 JH

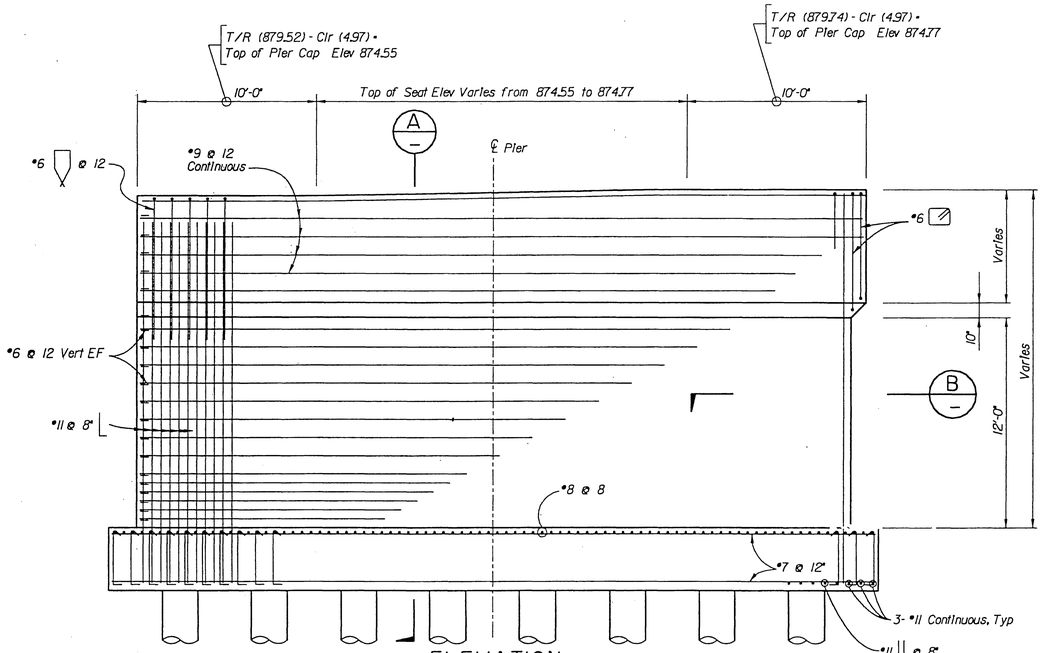

ELEVATION

Scale: 1/4" = 1'-0"
(VIEW LOOKING NORTH)

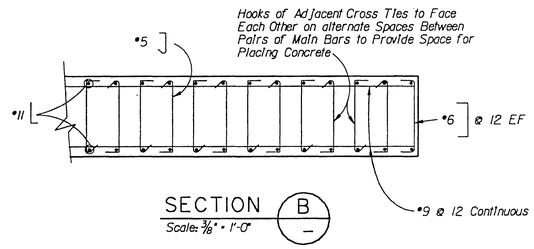

SECTION B

Scale: 3/8" = 1'-0"

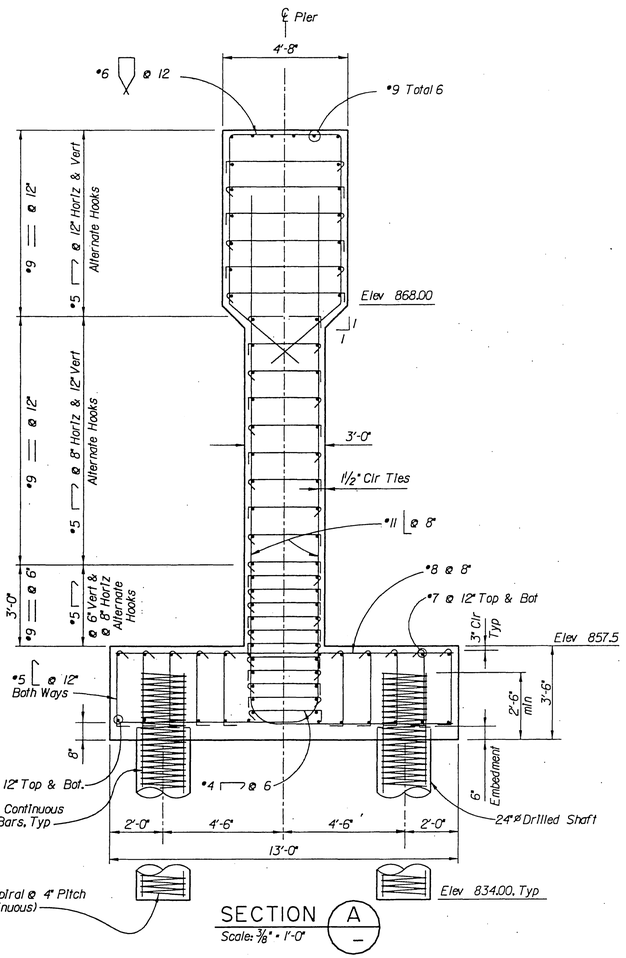

SECTION A

Scale: 3/8" = 1'-0"

FOR INFORMATION ONLY					
ITEM : PIER WALL					
QTY	BAR SIZE (#)	BAR TYPE ×	BAR LENGTH (FT - IN)	BAR UNIT WEIGHT (LB / LF)	TOTAL WEIGHT (LB)
40	6	8.4 / 4.2 / 1 / 1	29'-0"	1.502	1742
246	5	0.4/5 / 4.4 / 0.4/5	5'-2¾"	1.043	1342
760	5	0.4/5 / 2.8 / 0.4/5	3'-6¾"	1.043	2824
430	5	0.4/5 / 3.3 / 0.4/5	4'-1¾"	1.043	1859
2	5	4.4 / 8.2	23'-0"	1.043	48
20	9	ST - H	39'-8"	3.40	2697
36	9	ST - H	38'-11"	3.40	4763
12	7	ST-H-FT	41'-8"	2.044	1022
12	7	ST-H-FB	41'-8"	2.044	1022
120	11	18.4 / 7.8 (NL)	26'-0"	5.31	16567
64	8	ST-H-FT-NL	12'-8"	2.67	2164
14	6	2/12 / 4.4 / 12	6'-8"	1.502	140
26	6	2/12 / 2.8 / 12	3'-10"	1.502	150
TOTAL					36340

× ST= STRAIGHT BAR
H = HORIZONTAL BAR
V = VERTICAL BAR
FT = FOOTING TOP BARS
FB = FOOTING BOTTOM BARS
NL = NO LAP SPLICE PERMITTED

Concrete = 164 CY
Structural Excavation = 160 CY
Structural Backfill = 76 CY

FOR INFORMATION ONLY					
ITEM : 24" DRILLED SHAFTS					
QTY	BAR TYPE (#)	BAR TYPE ×	BAR LENGTH (FT - IN)	BAR UNIT WEIGHT (LB / LF)	TOTAL WEIGHT (LB)
11	9	ST-V-NL	23'-0"	3.40	785
1	5	S	359'-0"	1.043	374
TOTAL FOR EACH DRILLED SHAFT					1159
TOTAL FOR 16 DRILLED SHAFTS					18544

× ST= STRAIGHT BAR CONTINUOUS
V = VERTICAL BAR
S = #5 CONTINUOUS SPIRAL AT 4" PITCH (D = 20" OUT-TO-OUT)
NL = NO LAP SPLICE PERMITTED

Concrete = 5.31 CY each

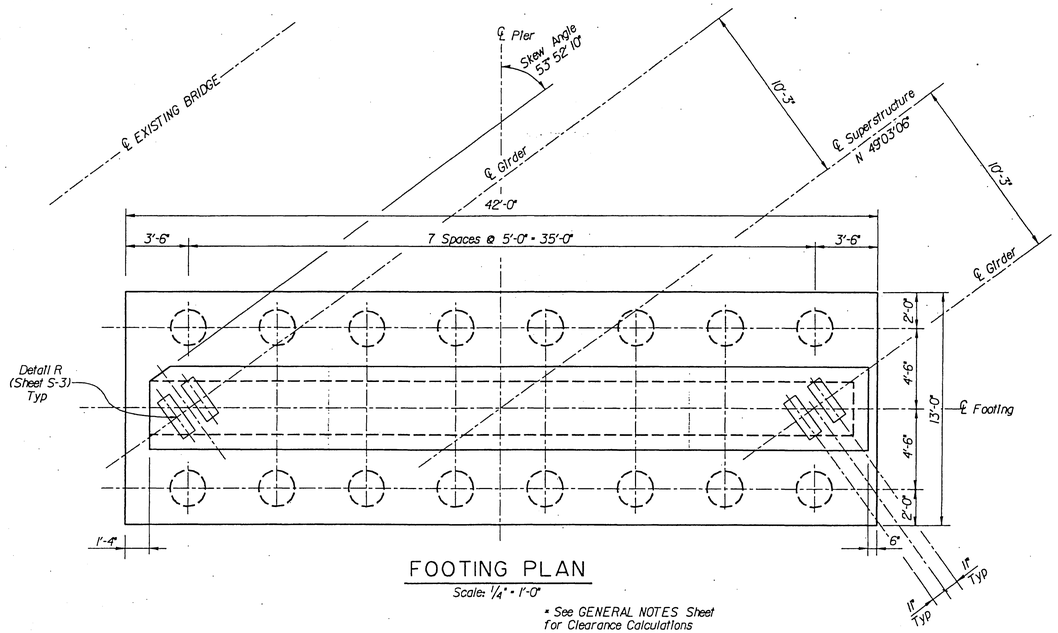

FOOTING PLAN

Scale: 1/4" = 1'-0"

* See GENERAL NOTES Sheet for Clearance Calculations

RECEIVED
FEB 28 1995
DEPT. OF PUBLIC WORKS

For Reduced Plans
Original Scale Is In Inches
0 1" 2" 3"

Issue No.	Description	Date	Drwn.	Chkd.	Resp. Engr.	Proj. Mgr.

HDR
HDR Engineering, Inc.

Designed By	TDL
Drawn By	PZ
Checked By	HS
Approved By	JMJ
Date	07-15-1994

ATCHISON, TOPEKA & SANTA FE RAILWAY COMPANY

CENTRAL AVENUE UNDERPASS PIER DETAILS

R-3944

Scale	Project No.	Drawing No.	Sheet
AS NOTED	06791	S-7	7 of 18

FILE: c:\06791\016\centra07.dgn
DATE: 4-Aug-94 09:46

INDEXED 6-08-06

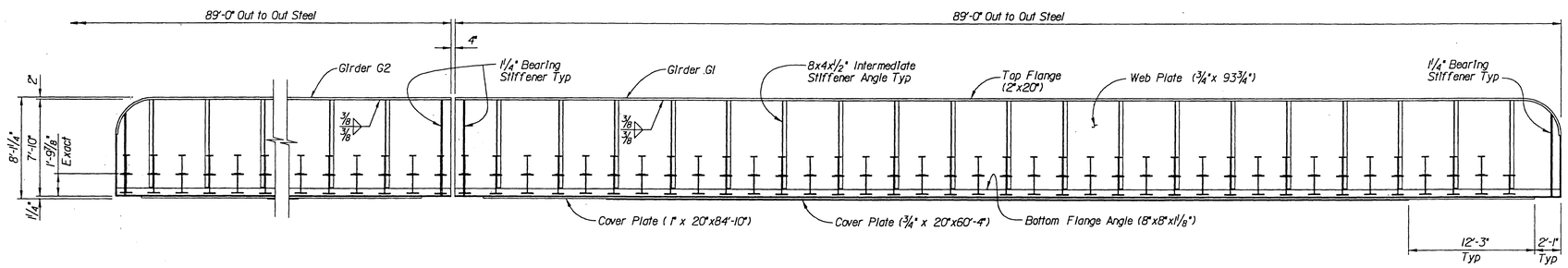

GIRDER ELEVATION

Scale: 3/16" = 1'-0"

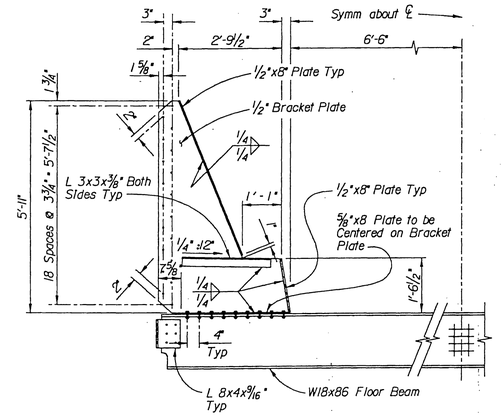

ELEVATION - FLOOR BEAM BRACKETS SHOP ASSEMBLY

Scale: ½" = 1'-0"

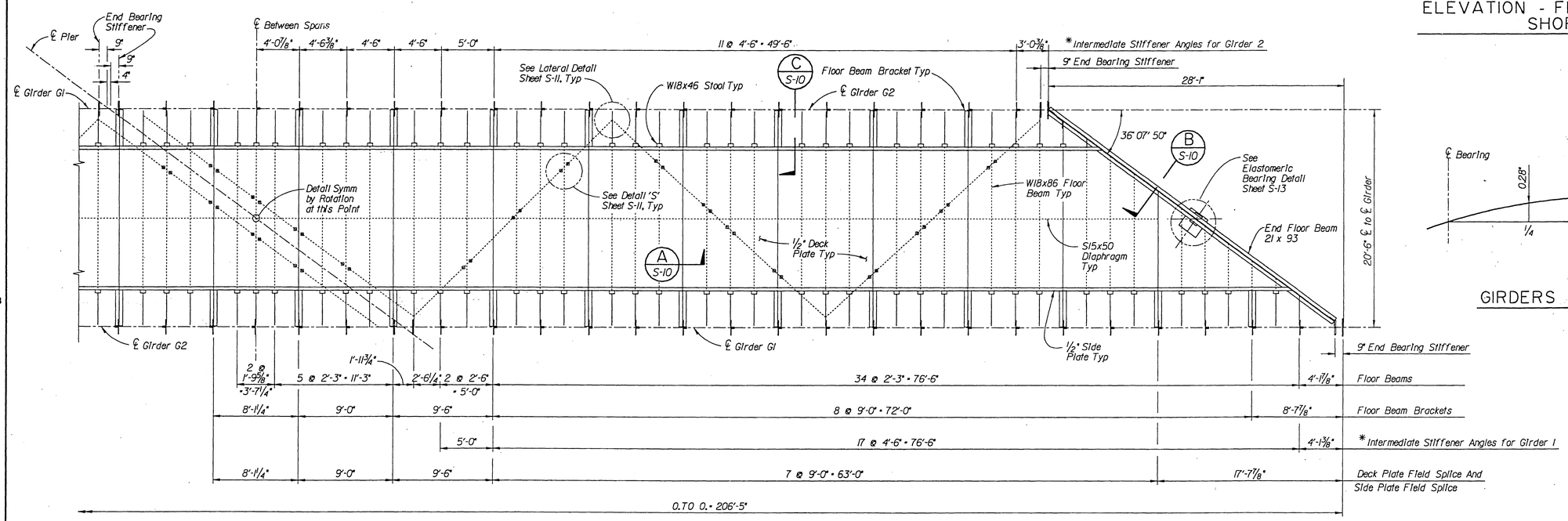

FRAMING PLAN

Scale: 3/16" = 1'-0"

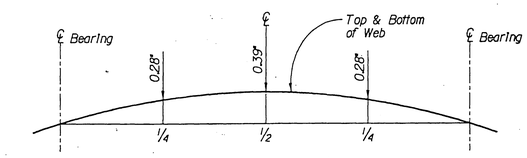

GIRDERS CAMBER DIAGRAM

Not To Scale

* Dimensions are to Center of Outstanding Leg of Intermediate Stiffener Angles.

RECEIVED FEB 28 1995 DEPT. OF PUBLIC WORKS

For Reduced Plans Original Scale Is In Inches 0 1" 2" 3"

Issue No.	Description	Date	Drwn.	Chkd.	Resp. Engr.	Proj. Mgr.

HDR Engineering, Inc.

Designed By TDL
Drawn By JG
Checked By HS
Approved By JMJ
Date 07-15-1994

ATCHISON, TOPEKA & SANTA FE RAILWAY COMPANY

CENTRAL AVENUE UNDERPASS FRAMING PLAN

R-3944

Scale	Project No.	Drawing No.	Sheet
AS NOTED	06791	S-8	8 of 18

FILE: c:\0679\016\centra08.dgn
DATE: 9-Aug-94 07:46

INDEXED 6-08-06

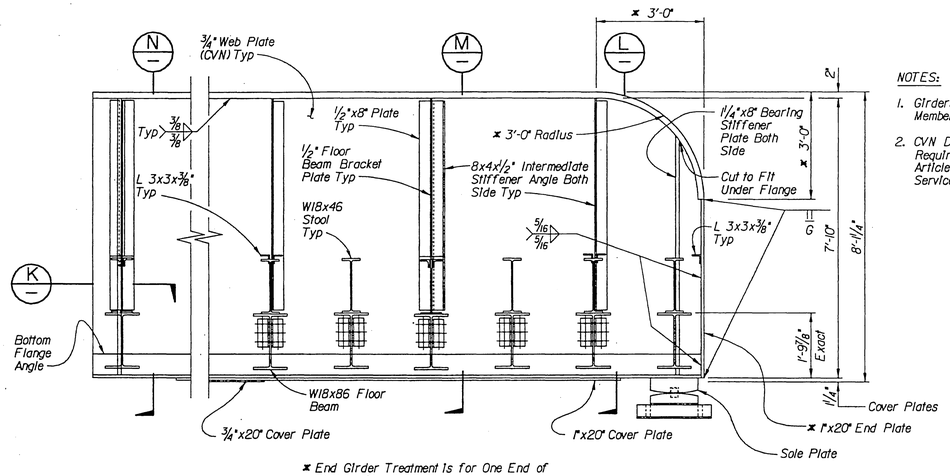

* End Girder Treatment Is for One End of Girders G1 and G2 Only.

INSIDE ELEVATION OF GIRDER G2

Scale: 1/2" = 1'-0"

NOTES:

1. Girders are Designated as Fracture Critical Members.
2. CVN Denotes Charpy V-Notch Impact Test Requirements as per 1993 AREA Specification Article 1-14, Table 1-14-7 (-30°F) Minimum Service Temperature.

CHECKERED PLATE NOTES:

1. Fasten 3/8" Checkered Plate to Stools and Angles with 1/2" Diameter Countersunk Flat Head Bolts. Nuts to be Tack Weld Under the Flanges After Field Assembled.
2. Notch Checkered Plate to Fit Around Stiffener Plates.
3. Notch Checkered Plate to Fit Around Bracket Plate and Stiffener Plate.

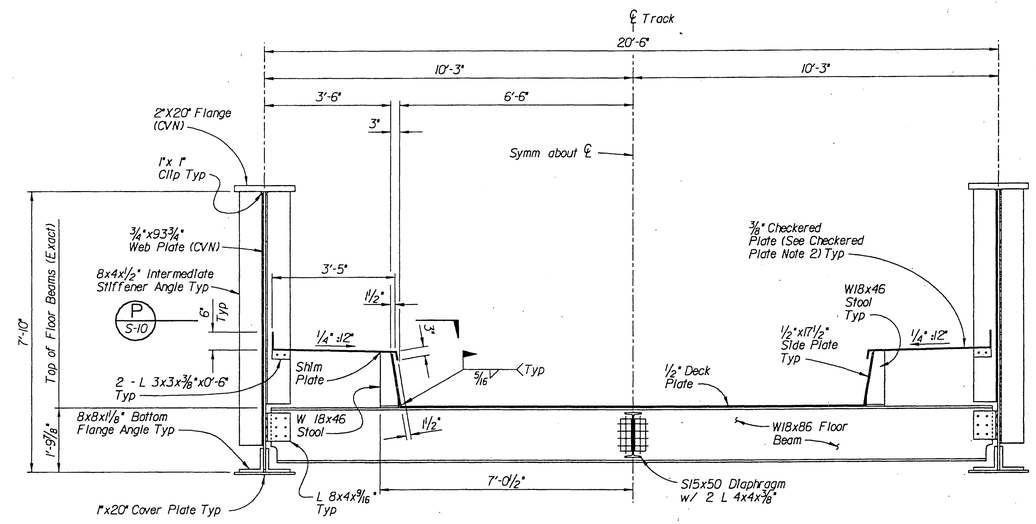

SECTION L

Scale: 1/2" = 1'-0"

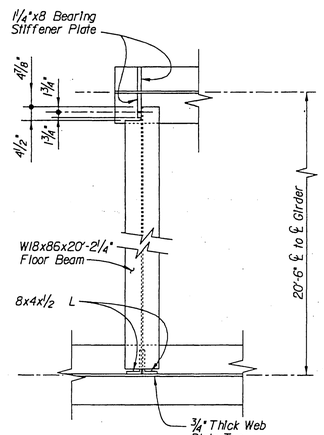

SECTION K

Scale: 1/2" = 1'-0"

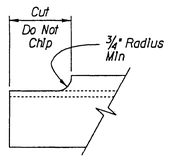

TYPICAL COPE

Not To Scale

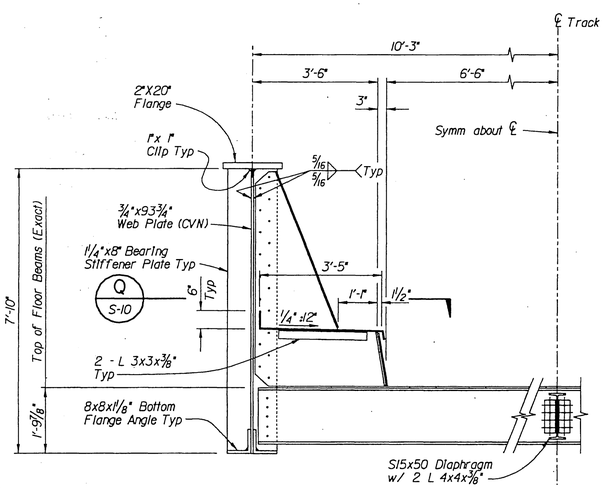

SECTION N

Scale: 1/2" = 1'-0"

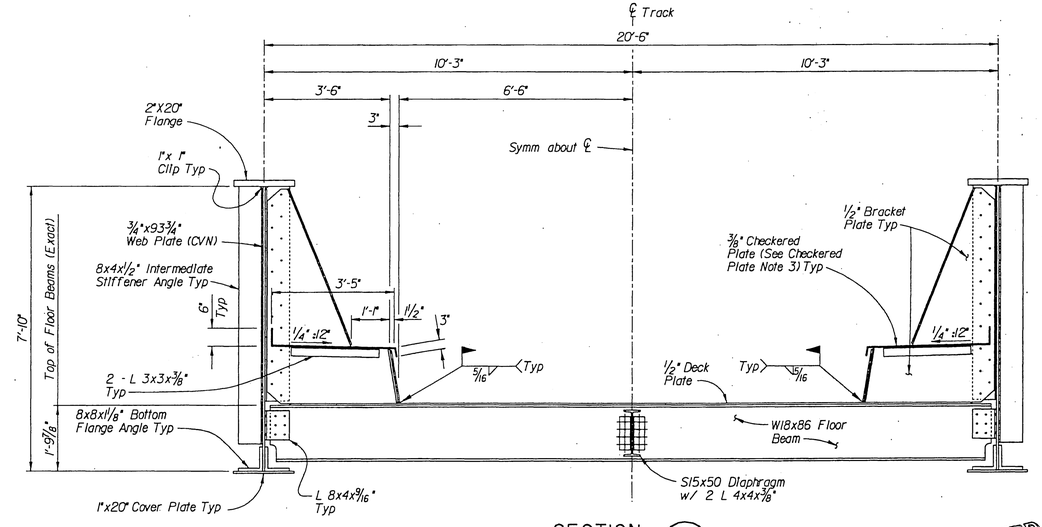

SECTION M

Scale: 1/2" = 1'-0"

RECEIVED FEB 28 1995 DEPT. OF PUBLIC WORKS

For Reduced Plans Original Scale Is In Inches 0 1" 2" 3"

Issue No.	Description	Date	Drwn.	Chkd.	Resp. Engr.	Proj. Mgr.

HDR Engineering, Inc.

Designed By	TDL
Drawn By	JG
Checked By	HS
Approved By	JMJ
Date	07-15-1994

ATCHISON, TOPEKA & SANTA FE RAILWAY COMPANY

CENTRAL AVENUE UNDERPASS GIRDER DETAILS NO. 1

R-3944

Scale	Project No.	Drawing No.	Sheet
AS NOTED	06791	S-9	9 of 18

FILE: c:\06791\016\centra09.dgn
DATE: 9-Aug-94 07:52 A

INDEXED 6-08-06 4H

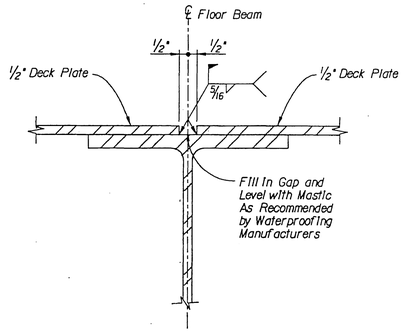

SECTION A S-8
TYPICAL FIELD SPLICE JOINT
Scale: 3" = 1'-0"

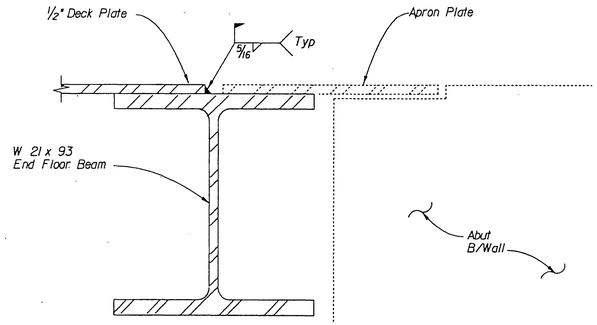

SECTION B S-8
No Scale

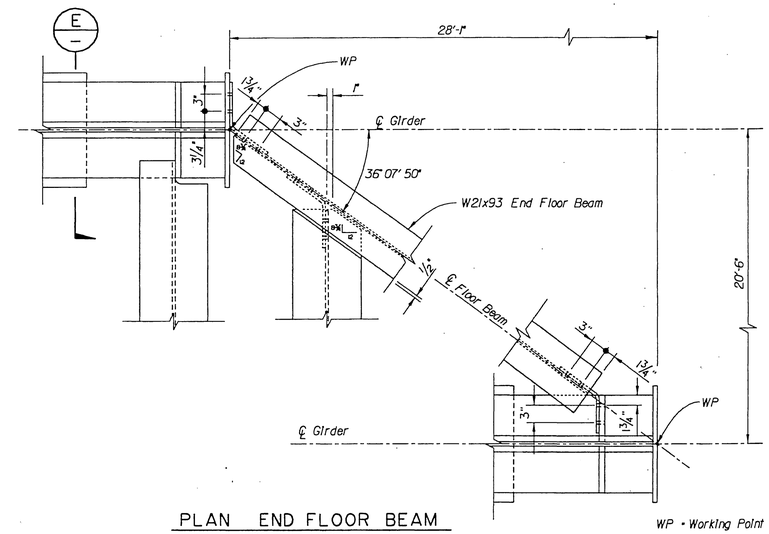

PLAN END FLOOR BEAM
SCALE: 1" = 1'-0"

WP = Working Point

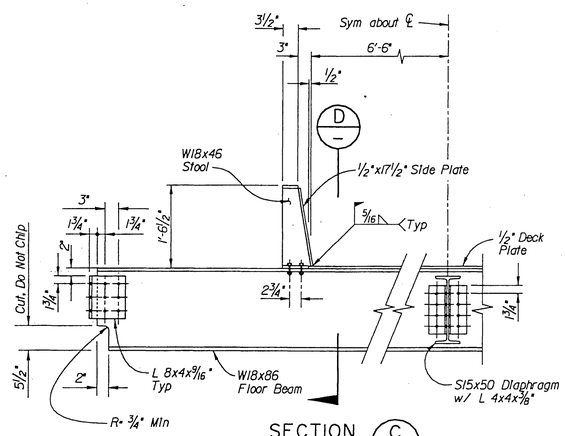

SECTION C S-8
SCALE: 3/4" = 1'-0"

Note:
Erect Floor Beams Individually
Place 1/2" Steel Deck Afterward.

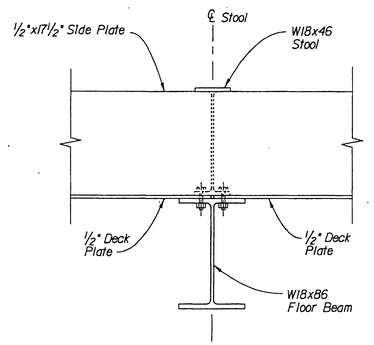

SECTION D
No Scale

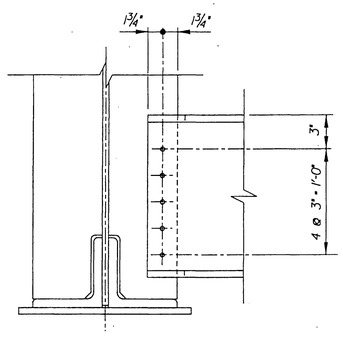

SECTION E
SCALE: 1 1/2" = 1'-0"

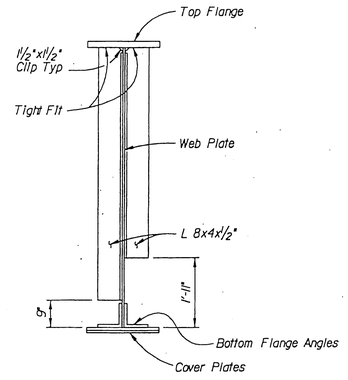

TYPICAL SECTION AT FLOOR BEAMS
Scale: 1/2" = 1'-0"

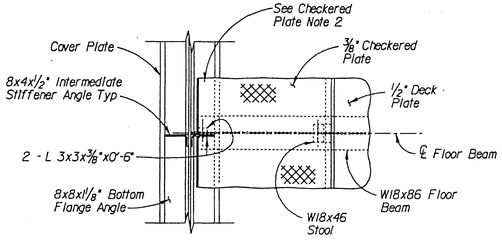

SECTION P S-9
Scale: 1/2" = 1'-0"

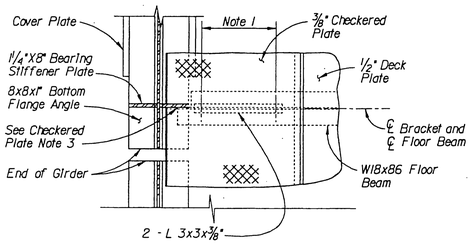

SECTION Q S-9
Scale: 1/2" = 1'-0"

RECEIVED
FEB 28 1995
DEPT. OF PUBLIC WORKS

For Reduced Plans
Original Scale Is In Inches
0 1" 2" 3"

Issue No.	Description	Date	Drwn.	Chkd.	Resp. Engr.	Proj. Mgr.

HDR
HDR Engineering, Inc.

6-28-95

Designed By	TDL
Drawn By	PZ
Checked By	HS
Approved By	JMJ
Date	07-15-1994

Santa Fe
ATCHISON, TOPEKA & SANTA FE RAILWAY COMPANY

CENTRAL AVENUE UNDERPASS GIRDER DETAILS NO. 2

R-3944

Scale	Project No.	Drawing No.	Sheet
AS NOTED	06791	S-10	10 of 18

FILE: c:\06791\016\central0.dgn
DATE: 9-Aug-94 08:0

INDEXED 6-08-06

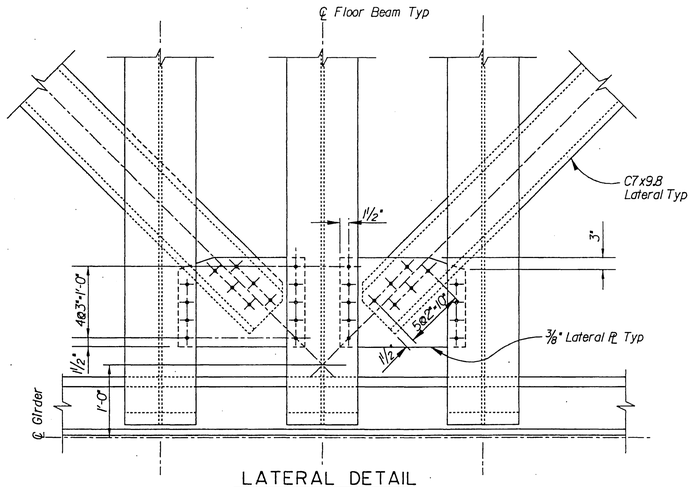

LATERAL DETAIL
SCALE: 1"=1'-0"

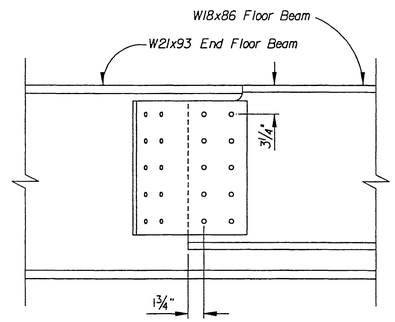

TYPICAL CONNECTION END FLOOR BEAM
SCALE: 1½"=1'-0"

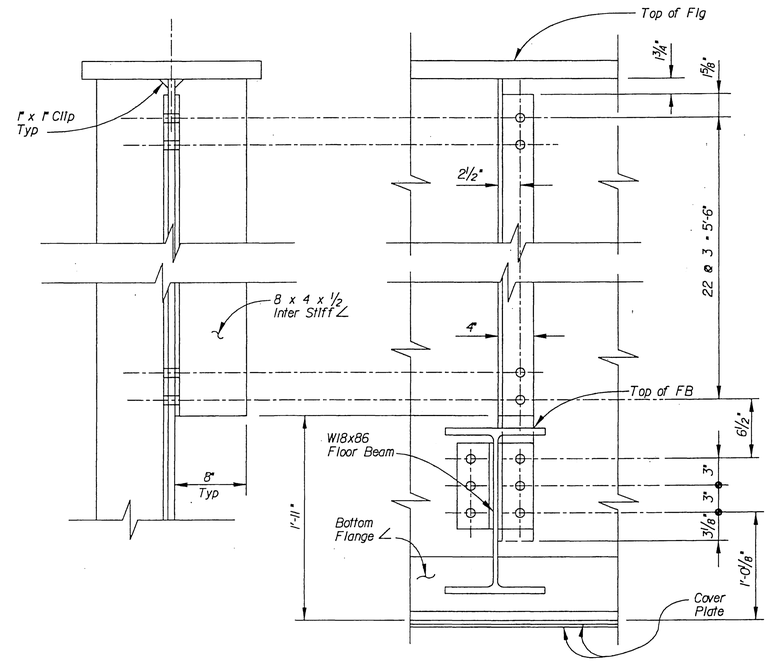

INTERMEDIATE STIFFENER
SCALE: 1½"=1'-0"

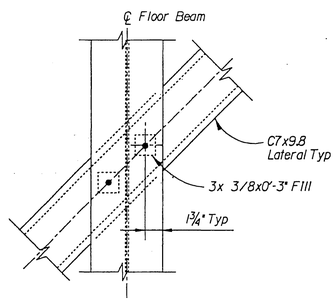

DETAIL "S"
SCALE: 1"=1'-0"

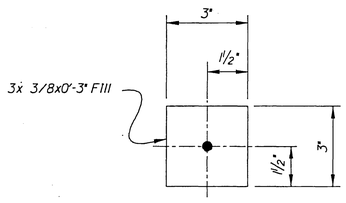

FILL PLATE
NO SCALE

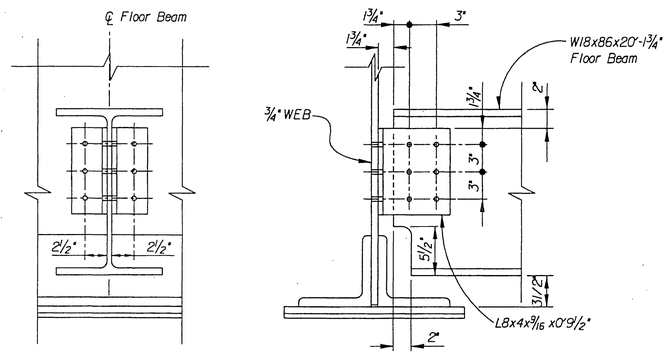

TYPICAL FLOOR BEAM CONNECTION
SCALE: 1½"=1'-0"

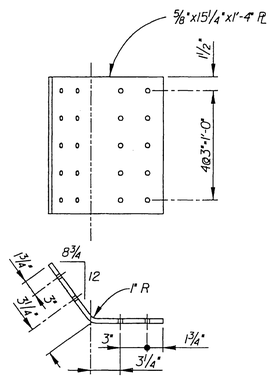

BENT PLATE
SCALE: 1½"=1'-0"

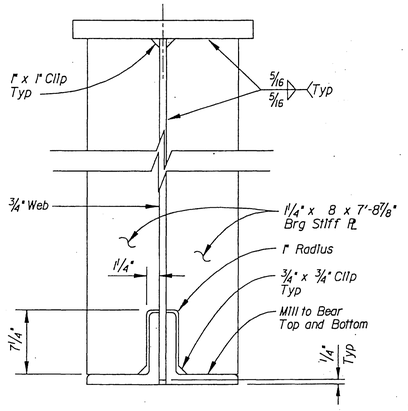

BEARING STIFFENER
SCALE: 1½"=1'-0"

RECEIVED
FEB 28 1995
DEPT. OF PUBLIC WORKS

For Reduced Plans
Original Scale Is In Inches
0 1" 2" 3"

Issue No.	Description	Date	Drwn.	Chkd.	Resp. Engr.	Proj. Mgr.

HDR
HDR Engineering, Inc.

Designed By	TDL
Drawn By	PZ
Checked By	HJ
Approved By	JMJ
Date	07-15-1994

ATCHISON, TOPEKA & SANTA FE RAILWAY COMPANY

CENTRAL AVENUE UNDERPASS GIRDER DETAILS NO. 3

R-3944

Scale	Project No.	Drawing No.	Sheet
AS NOTED	06791	S-11	11 of 18

FILE: c:\06791\016\centrall.dgn
DATE: 4-Aug-94 10:19

INDEXED 6-08-06 4H

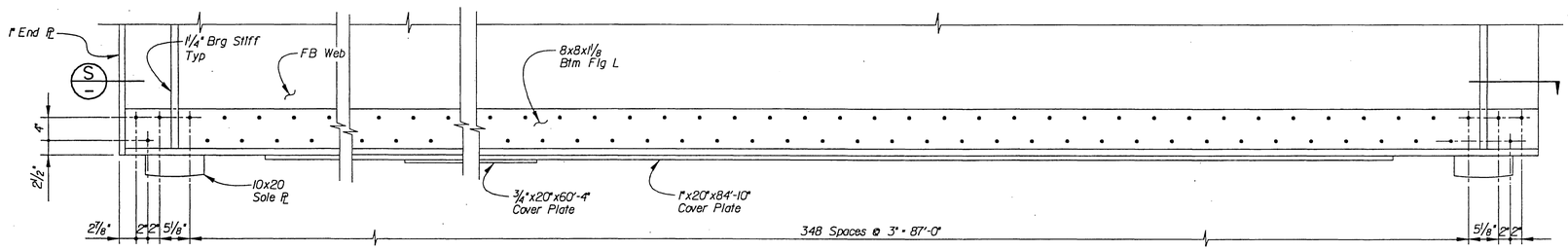

BOLT PATTERN FOR BOTTOM FLANGE

Scale: 1" = 1'

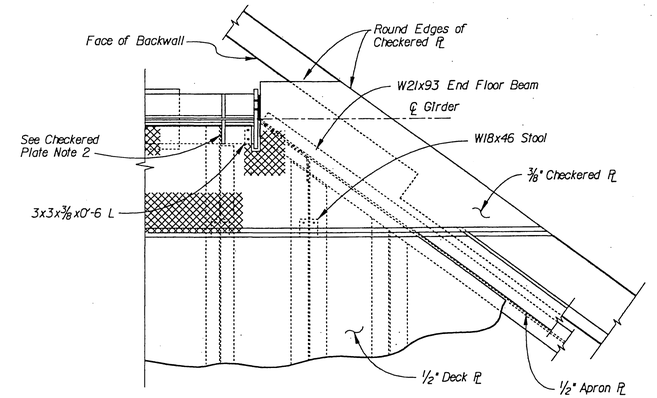

CHECKERED PLATE DETAIL AT ABUTMENT

Scale: 1/2" = 1'

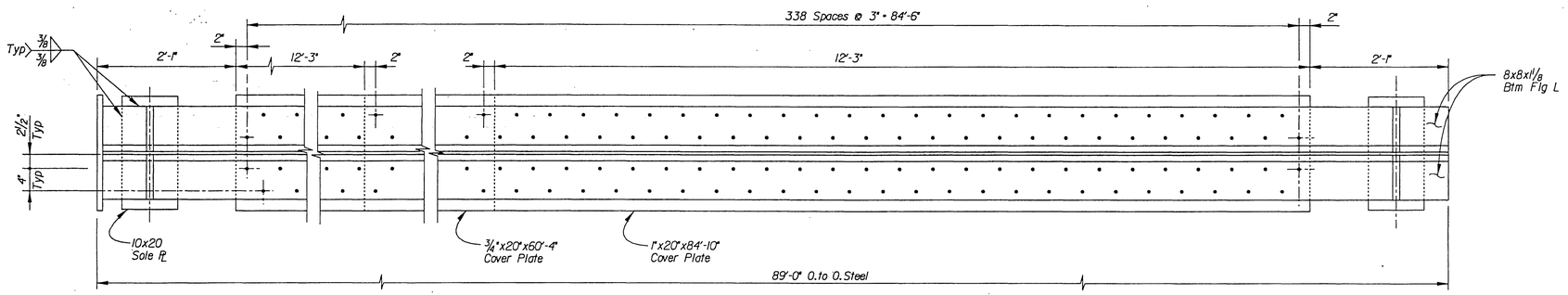

SECTION S

Scale: 1" = 1'

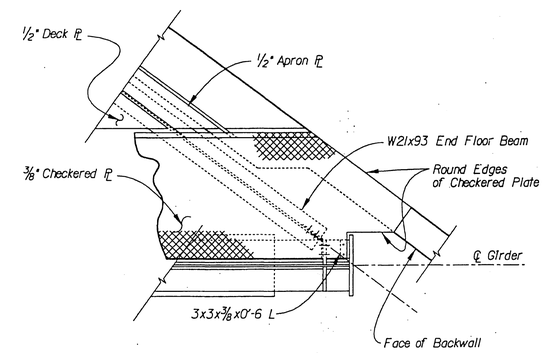

CHECKERED PLATE DETAIL AT ABUTMENT

Scale: 1/2" = 1'

CHECKERED PLATE NOTES:

1. Fasten 3/8" Checkered Plate to Stools and Angles with 1/2" Diameter Countersunk Flat Head Bolts. Nuts to be Tack Weld Under the Flanges After Field Assembled.
2. Notch Checkered Plate to Fit Around Stiffener.
3. Notch Checkered Plate to Fit Around Bracket Plate and Stiffener.

RECEIVED
FEB 28 1995
DEPT. OF PUBLIC WORKS

For Reduced Plans Original Scale Is In Inches 0 1" 2" 3"

Issue No.	Description	Date	Drwn.	Chkd.	Resp. Engr.	Proj. Mgr.

HDR Engineering, Inc.

Designed By	TDL
Drawn By	PZ
Checked By	HS
Approved By	JMJ
Date	07-15-1994

ATCHISON, TOPEKA & SANTA FE RAILWAY COMPANY

CENTRAL AVENUE UNDERPASS GIRDER DETAILS NO. 4

R-3944

Scale	Project No.	Drawing No.	Sheet
AS NOTED	06791	S-12	12 of 18

FILE: c:\06791\016\central2.dgn
DATE: 9-Aug-94 08:12

INDEXED 6-08-06 LH

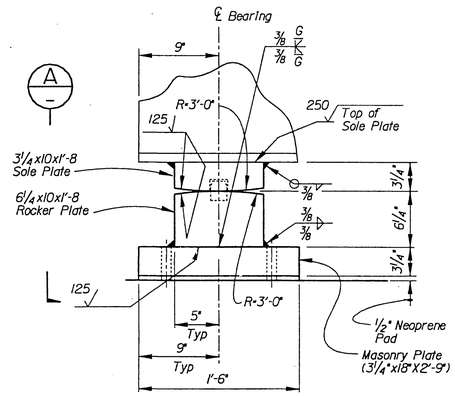

FIXED BEARING

Scale: 1½"=1'-0"

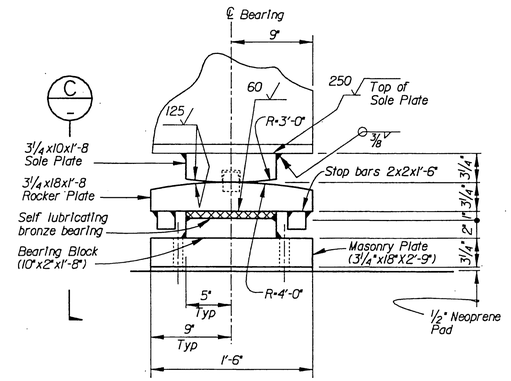

EXPANSION BEARING

Scale: 1½"=1'-0"

NOTE: Hold-Down Z Not Shown For Clarity

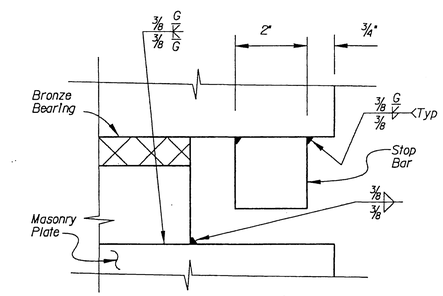

STOP BAR DETAIL

Scale: 3"=1'-0"

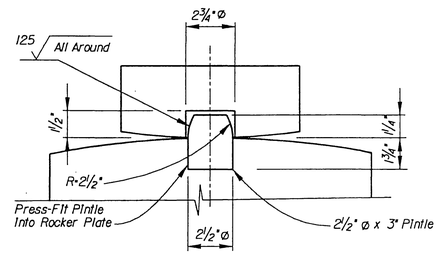

PINTLE DETAIL

Scale: 3"=1'-0"

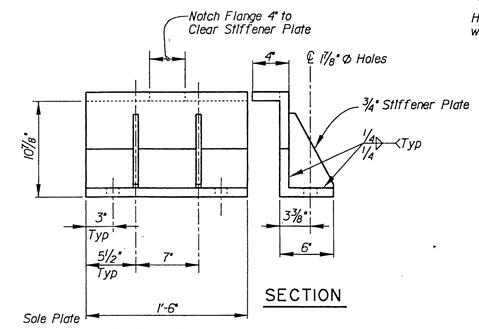

HOLD-DOWN Z DETAIL

Scale: 1½"=1'-0"

NOTE: Fabricate Hold-Down Z From 2 L 6x6x1 Angles.

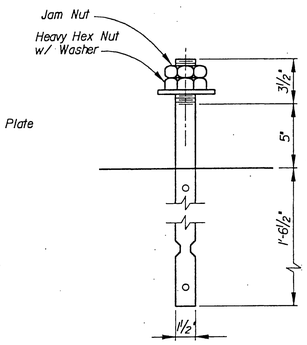

SWEDGE BOLT DETAIL

Scale: 3"=1'-0"

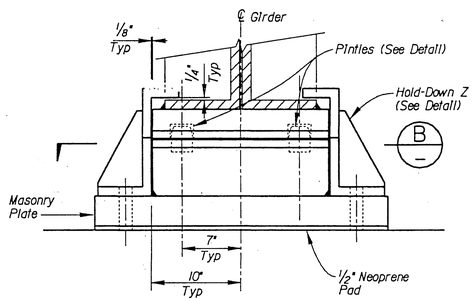

VIEW A

Scale: 1½"=1'-0"

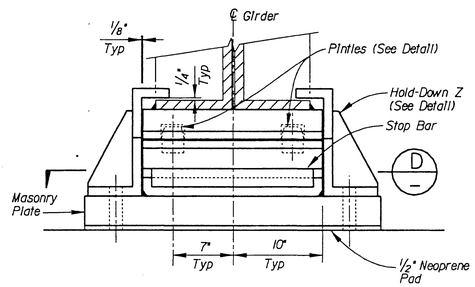

VIEW C

Scale: 1½"=1'-0"

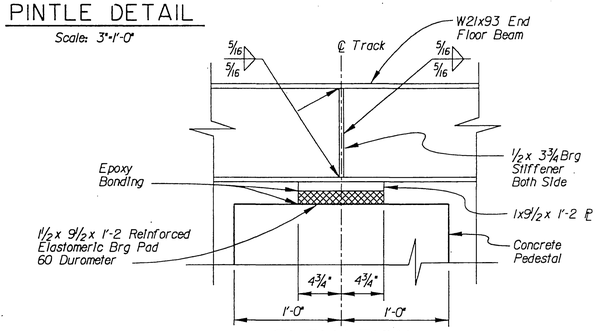

ELEVATION

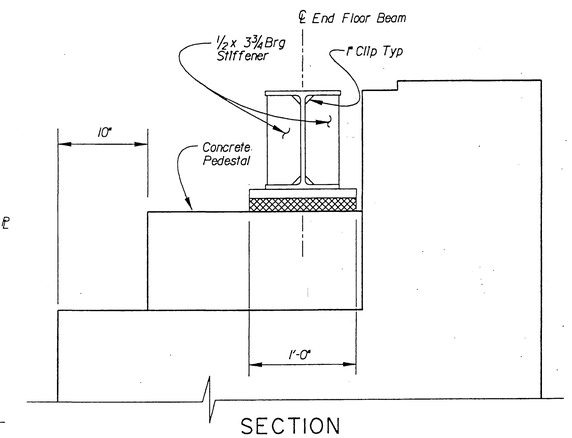

SECTION

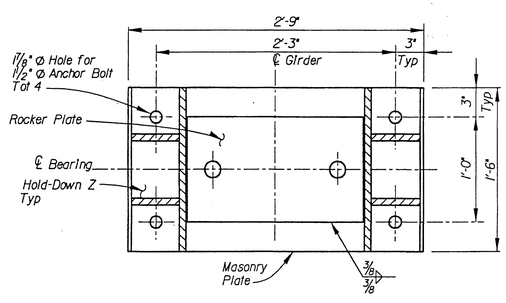

SECTION B

Scale: 1½"=1'-0"

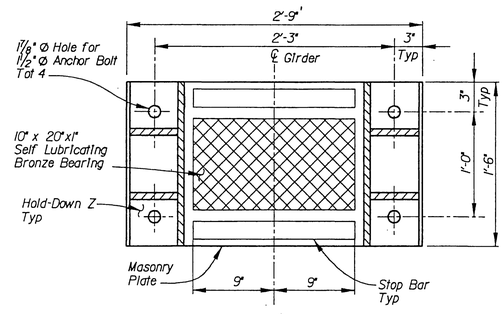

SECTION D

Scale: 1½"=1'-0"

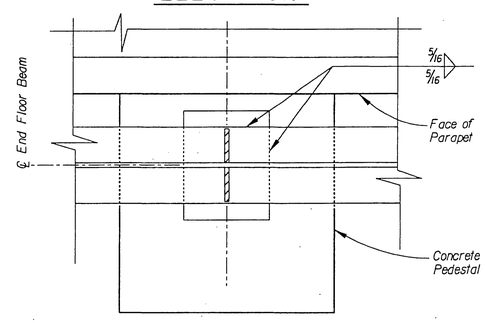

ELASTOMERIC BEARING DETAIL

Scale: 1½"=1'-0"

GENERAL NOTES FOR BEARINGS:

1. All Material shall conform to ASTM A-709,50 W specifications.
2. All welded assemblies shall be stress-relieved after fabrication.
3. All surfaces where finish is shown shall be machine finished.
4. Self lubricating bronze bearing plates to conform to ASTM, Specification B22. Alloy C91100. Edges to be machined.
5. All masonry plates to be set on ½" neoprene pad [illegible]
6. Elastomeric Bearing pad See GENERAL NOTES Sheet [illegible]

RECEIVED AUG 28 1995 DEPT. OF PUBLIC WORKS

For Reduced Plans Original Scale Is In Inches 0 1" 2" 3"

Issue No.	Description	Date	Drwn.	Chkd.	Resp. Engr.	Proj. Mgr.

HDR Engineering, Inc.

Designed By	TDL
Drawn By	PZ
Checked By	HS
Approved By	JMJ
Date	07-15-1994

ATCHISON, TOPEKA & SANTA FE RAILWAY COMPANY

CENTRAL AVENUE UNDERPASS BEARING DETAILS

R-3944

Scale	Project No.	Drawing No.	Sheet
AS NOTED	06791	S-13	13 of 18

FILE: c:\06791\016\central3.dgn
DATE: 4-Aug-94 11:01

INDEXED 6-08-06 HH

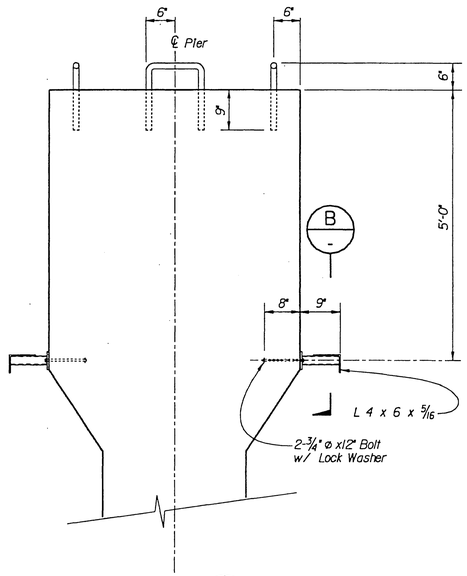

VIEW A
Scale: 3/4"=1'-0"

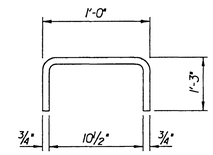

HANDHOLD DETAIL
Scale: 1 1/2" = 1'-0"

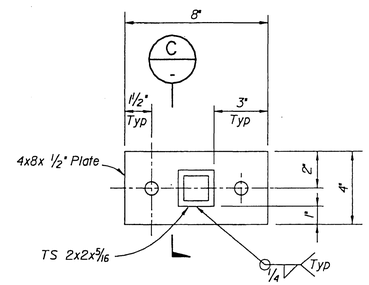

SECTION B
NO SCALE

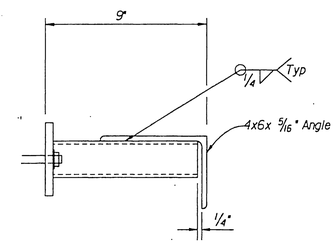

SECTION C
NO SCALE

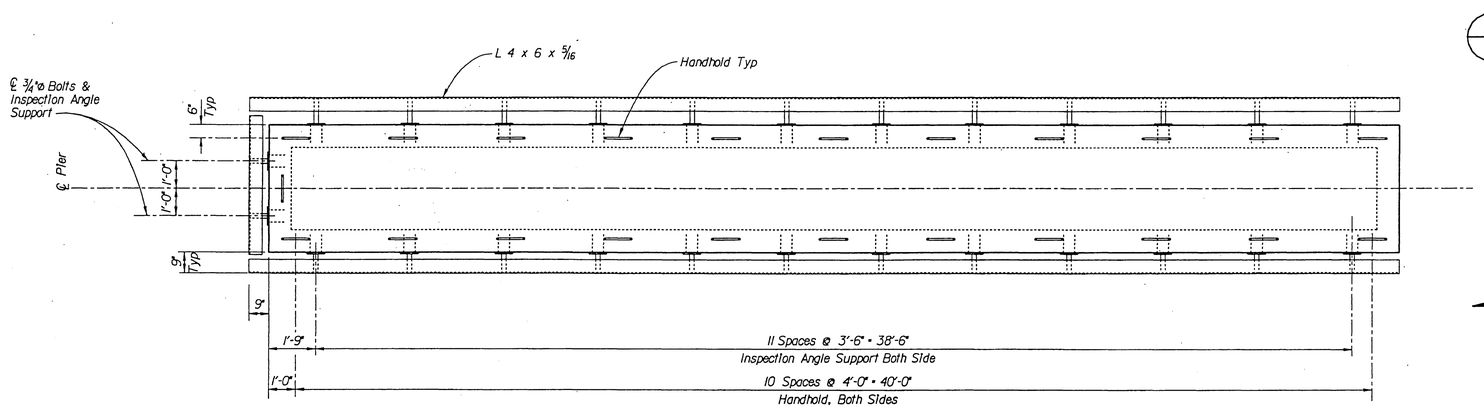

PLAN
Scale: 3/8" = 1'-0"

RECEIVED
FEB 28 1995
DEPT. OF PUBLIC WORKS

For Reduced Plans
Original Scale Is In Inches
0 1" 2" 3"

Issue No.	Description	Date	Drwn.	Chkd.	Resp. Engr.	Proj. Mgr.

HDR
HDR Engineering, Inc.

Designed By	TDL
Drawn By	PZ
Checked By	HS
Approved By	JMJ
Date	07-15-1994

ATCHISON, TOPEKA & SANTA FE RAILWAY COMPANY

CENTRAL AVENUE UNDERPASS INSPECTION FACILITIES DETAILS

R-3944

Scale	Project No.	Drawing No.	Sheet
AS NOTED	06791	S-14	14 of 18

FILE: c:\06791\06\central4.dgn
DATE: 4-Aug-94 11:03

INDEXED 6-08-06 HH

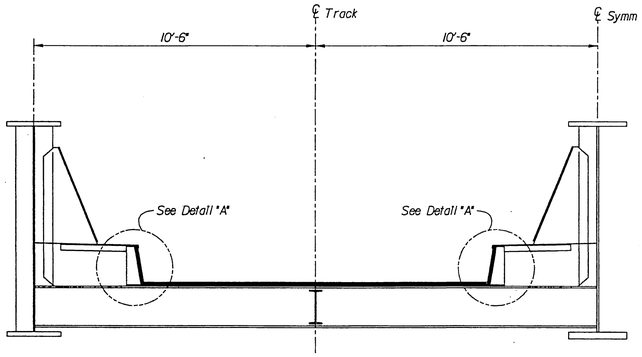

TYPICAL SECTION

Scale: 3/8"=1'-0"

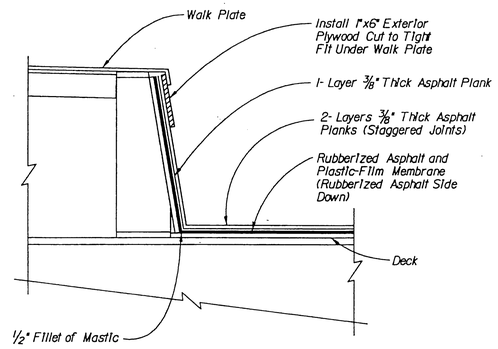

DETAIL 'A'

Scale: 1 1/2" = 1'-0"

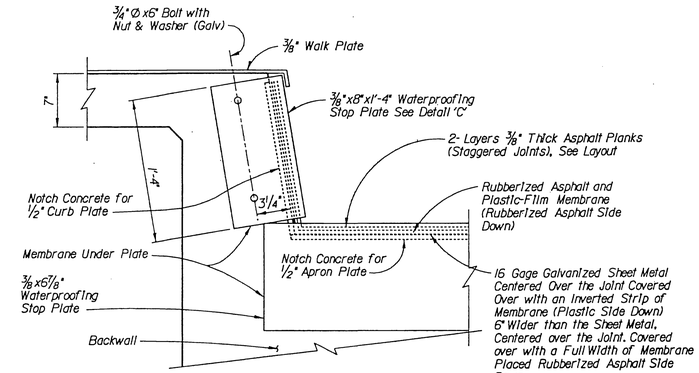

WATERPROOFING AT ABUTMENT CURB

Scale: 1 1/2"=1'-0"

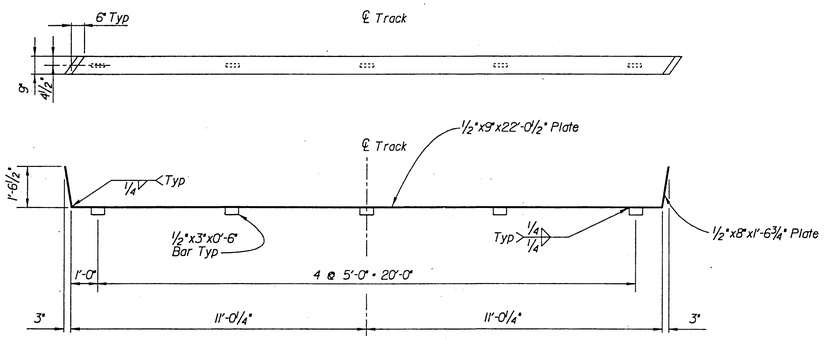

APRON PLATE DETAIL

Scale: 3/8"=1'-0"

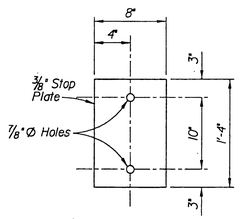

DETAIL 'C'

Not To Scale

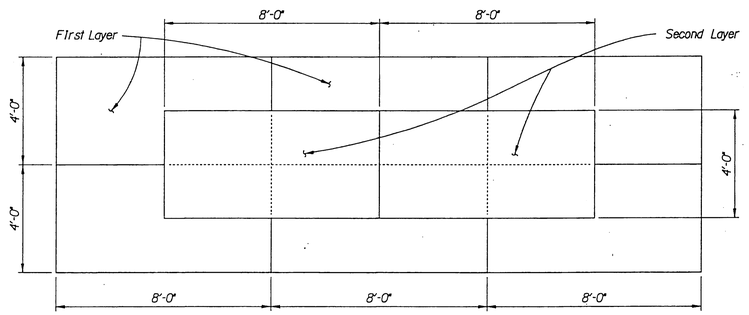

3/8" ASPHALT PLANKS LAYOUT

Scale: 3/8"=1'-0"

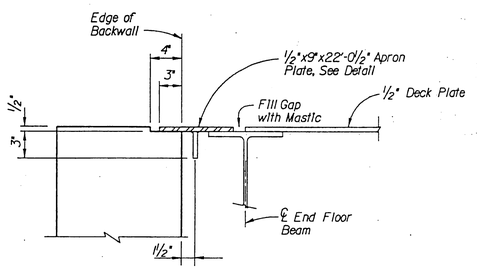

APRON PLATE AT ABUTMENTS

Scale: 1 1/2"=1'-0"

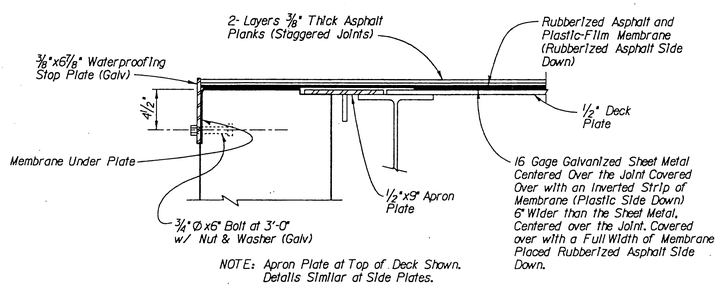

NOTE: Apron Plate at Top of Deck Shown. Details Similar at Side Plates.

WATERPROOFING AT ABUTMENT

Not To Scale

RECEIVED
FEB 28 1995
DEPT. OF PUBLIC WORKS

For Reduced Plans Original Scale Is In Inches 0 1" 2" 3"

Issue No.	Description	Date	Drwn.	Chkd.	Resp. Engr.	Proj. Mgr.

HDR Engineering, Inc.

Designed By	TDL
Drawn By	PZ
Checked By	HS
Approved By	JMJ
Date	07-15-1994

ATCHISON, TOPEKA & SANTA FE RAILWAY COMPANY

CENTRAL AVENUE UNDERPASS WATERPROOFING DETAILS

R-3944

Scale	Project No.	Drawing No.	Sheet
AS NOTED	06791	S-15	15 of 18

FILE: c:\06791\016\central5.dgn
DATE: 9-Aug-94 08:30A

INDEXED 6-08-06 FH

Max.Wall Height:	6.0	(Feet)
Base Width:	4.02	(Feet)
Backslope Angle:	0.00	(Degrees)
No.of Layers:	9	
Surcharge:	250.0	(PSF)

Layer	Toe	Heel	Width	Thickness
1	0.00	4.02	4.02 A6	0.67
2	0.22	4.01	3.79	0.67
3	0.44	4.00	3.56	0.67
4	0.67	4.00	3.33 A5	0.67
5	0.89	3.99	3.10	0.67
6	1.11	3.98	2.87	0.67
7	1.33	3.97	2.64 A4	0.67
8	1.56	3.97	2.41	0.67
9	1.78	3.96	2.18	0.67

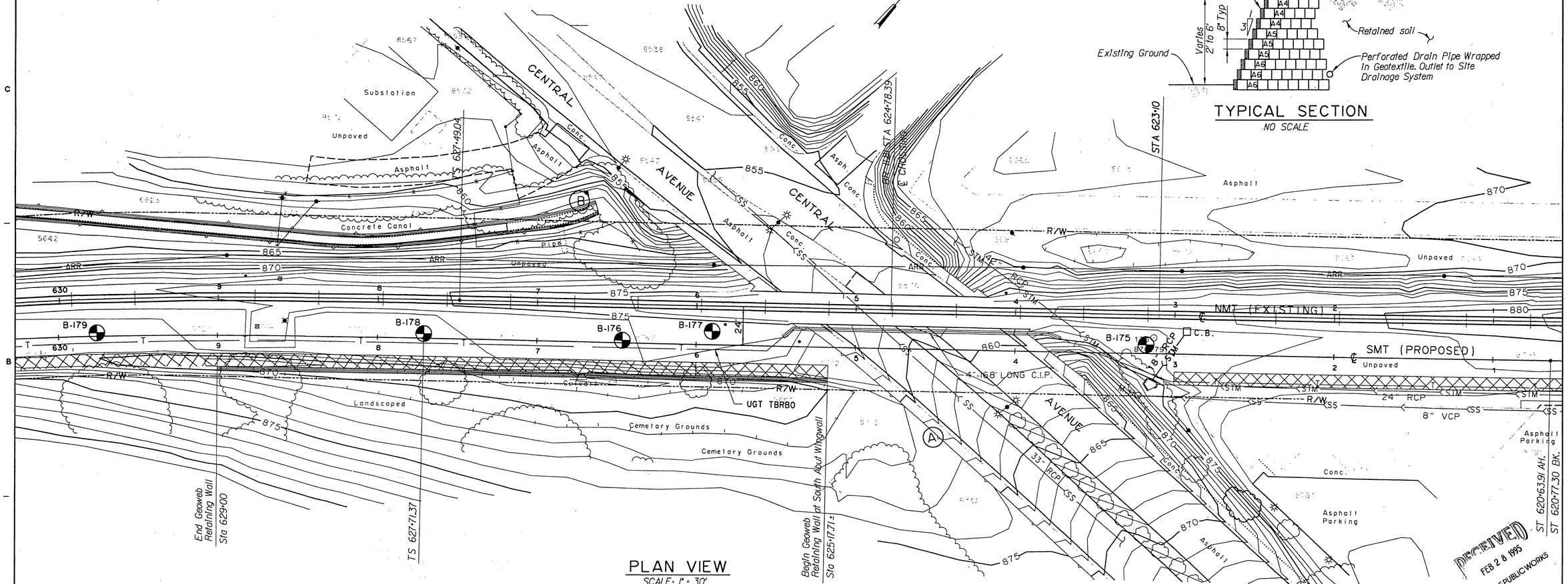

PLAN VIEW
SCALE: 1" = 30'

Geoweb Retaining Wall • 385 LF

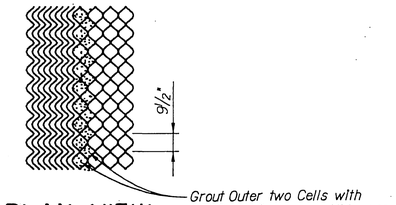

PLAN VIEW
NO SCALE

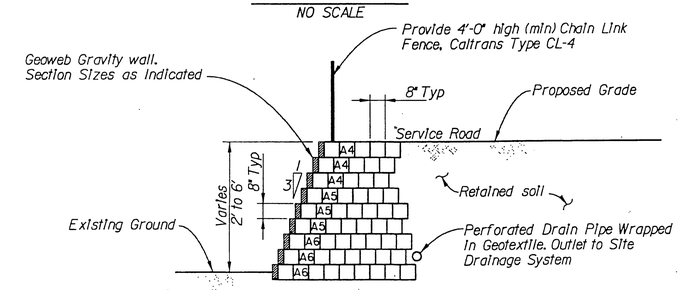

TYPICAL SECTION
NO SCALE

For Reduced Plans Original Scale Is In Inches 0 1" 2" 3"

Issue No.	Description	Date	Drwn.	Chkd.	Resp. Engr.	Proj. Mgr.

HDR
HDR Engineering, Inc.

Designed By	TDL/EH
Drawn By	PZ
Checked By	HS
Approved By	JMJ
Date	07-15-1994

ATCHISON, TOPEKA & SANTA FE RAILWAY COMPANY

CENTRAL AVENUE UNDERPASS GEOWEB RETAINING WALL
PLAN AND TYPICAL SECTION

R-3944

Scale	Project No.	Drawing No.	Sheet
AS NOTED	06791	S-16	16 of 18

FILE: c:\06791\016\central6.dgn
DATE: 4-Aug-94 11:26

INDEXED 6-08-06

GENERAL NOTES:

DESIGN SPECIFICATION:

Controlling specifications for design and construction of this project are as follows:

AT&SF Standard practice.

American Railway Engineering Association, Manual for Railway Engineering, Volumes I and II, latest edition, and Interim versions.

American Welding Society, Bridge Welding Code D1.5-88, latest edition.

Caltrans Standard Specifications, July 1992.

DESIGN LOADING:

Dead Load: As Calculated

Live Load: Coopers E-80 Plus Impact

TRACKWORK:

As specified by AT&SF and shown on the plans.

CAST-IN-PLACE CONCRETE:

All concrete, concrete work and placement of reinforcement shall be in accordance with Section 51 of Caltrans Standard Specification, July, 1992.

The ultimate compressive strength of concrete shall be not less than 4,000 psi in 28 days. Maximum size of coarse aggregate shall be one inch.

Minimum concrete cover on reinforcement shall be two inches, except on surfaces cast against earth which shall be three inches.

All exposed edges of concrete members shall be chamfered 3/4 inch.

All concrete shall receive an ordinary surface finish.

AIR-ENTRAINED CONCRETE:

Concrete in general shall be air-entrained containing not less than 4% nor more than 6% air by volume. Admixtures containing Chlorides are not permitted. Concrete shall be in accordance with Section 90 of Caltrans Standard Specification, July 1992.

REINFORCING STEEL:

All reinforcing steel shall be deformed bars meeting current A.S.T.M. designation: A615, grade 60. Fabrication of reinforcing steel shall be as per Section 52 of Caltrans Standard Specification, July 1992.

All reinforcing steel splices shall have a minimum lap of 30 bar diameters unless otherwise shown.

GROUT:

Grout shall be SEALTIGHT 588 Grout, non-ferrous, non-shrink grout as manufactured by W. R. Meadows, Inc, or similar.

GEOWEB RETAINING WALL:

The Geoweb retaining wall multi-layer retention structure shall be a cellular confinement system as manufactured by PRESTO Products Company and distributed by T.C. Johnson Co. (1-800-231 6341).

The installation of the retaining wall shall be supervised by a manufacturer's representative.

ELASTOMERIC BEARING PADS

The elastomeric bearing pads shall be 60 durometer and shall comform to AREA, chapter 8, part 18.

STRUCTURAL STEEL:

All structural steel shall conform to ASTM Specification A709-50W requirements unless otherwise shown on the plans. No painting of structural steel will be required.

A welding procedure shall be submitted and approved by the Engineer prior to commencement of fabrication of the superstructures.

Nondestructive testing and inspection will be required for all shop and field welding.

Girders are designed as Fracture Critical Members and shall meet the requirements of AREA Chapter 15, Article 1.14. Charpy V-Notch Impact test requirements as per Table 1.14.7 (-30°F) Minimum Service Temperature.

Personnel performing Non-Destructive Testing (NDT) shall be qualified as NDT level III. In accordance with ASNT recommended practice SNT-TC-1A, level III personnel must be certified by the ASNT.

Structural steel fabricators shall be currently certified under the AISC Quality Certification Program, Category III, Major Steel Bridges only.

The welds shall be performed with filler metal with atmospheric corrosion resistance, similar to the A709-50W steel.

All bolts shall be 7/8" dia. ASTM A-325 Type 3 with the same weathering characteristics as that of the A709-50W Structural Steels. Each bolt shall have one hardened washer under the turned element. Bolts shall be tightened by the turn-of-the-nut method as per AREA Chapter 15, Section 3.2.

The Through Plate Girder spans shall be completely shop assembled when sitting on level supports to the proper grade. All parts are to be match-marked for field erection.

The completed girders, including knee-bracing and the floor system, shall be shop blasted in accordance with SSPC-SP6 to remove all mill scale.

SHOP DRAWINGS:

Detailed shop drawings shall be submitted for review by the Engineer for conformance with the plans prior to beginning fabrication.

HANDRAILING/FENCING:

4'-0" high (min.) chain-link fencing (Caltrans Type CL-4) shall be provided at all locations conforming to the following diagram. These locations include, but are not limited to, the following:
1. Along the Geoweb retaining wall.
2. Along the existing and proposed retaining/wing walls adjacent to the bridge abutments.

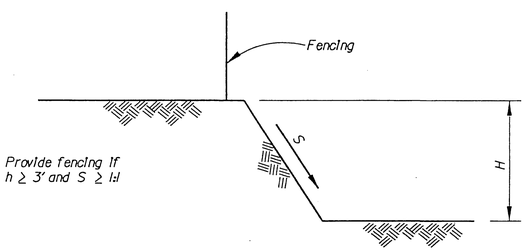

SITE CONDITIONS

The contractor shall verify all controlling field dimensions before ordering or fabricating any material.

QUANTITIES

All quantities listed in plans are for information purposes.
The contractor shall verify all quantities prior to submitting the bid.

	ITEM	UNIT	NORTH ABUTMENT WINGWALL	SOUTH ABUTMENT WINGWALL	BOTH APPROACH SLABS	BOTH ABUTMENT CAPS	SIX 36" DRILLED SHAFTS	SIXTEEN 24" DRILLED SHAFTS	PIER WALL	GEOWEB RETAINING WALL	TOTAL
ESTIMATED SUBSTRUCTURE QUANTITIES *	BAR REINFORCING STEEL	LB	870	370	2,610	27,902	18,594	18,544	36,340		105,230 LB
	STRUCTURAL CONCRETE	CY	4.3	2.2	12.4	89.9	48.9	85.0	164		407 CY
	36" DRILLED SHAFT	LF					183				183 LF
	24" DRILLED SHAFT	LF						315			315 LF
	HP 14 X 89 PILING	LF	60	24							84 LF
	GEOWEB RETAINING WALL	SF								1,800	1,800 SF
	PERVIOUS BACKFILL	CY	2.7	1.6		12.6					17 CY
	STRUCTURAL EXCAVATION	CY							160		160 CY
	STRUCTURAL BACKFILL	CY							76		76 CY

	ITEM	TOTAL
ESTIMATED SUPERSTRUCTURE QUANTITIES *	STRUCTURAL STEEL	494,349 LB
	WATERPROOFING	320 SY

* FOR INFORMATION ONLY

ITEM	Top of Rail to Bridge Seat Distance EXPAN IN	Top of Rail to Bridge Seat Distance FIXED IN	Top of Rail to Low Girder Distance IN	Top of Rail to End Floor Beam Beam Pedestal Seat Distance IN
Rail + Tie PL	8	8	8	8
Timber Tie	7	7	7	7
Ballast	8	8	8	8
Waterproofing	1	1	1	1
Steel Deck PL	0.5	0.5	0.5	0.5
Floor Beams	18.375	18.375	18.375	
Clearance	2.5	2.5	2.5	
Flange Angles	1.13	1.13	1.13	
Sole PL	3.25	3.25		
Rocker PL	3.25	6.25		
Bronze Bearing	3.00			
Masonry PL	3.25	3.25		
Neoprene Pad	0.5	0.5		
Cover PLs			1.25	
Bolt Heads			0.625	
End Floor Beam				21.625
End Floor Beam Sole PL				1
Bearing Pad				1.5
TOTAL INCHES	59.750	59.750	48.375	48.625
TOTAL FEET	4.98	4.98	4.03	4.05

RECEIVED
FEB 28 1995
DEPT. OF PUBLIC WORKS

Issue No.	Description	Date	Drwn.	Chkd.	Resp. Engr.	Proj. Mgr.

HDR Engineering, Inc.

Registered Professional Engineer, State of California, Civil, No. 41667, Exp. 6-30-95

Designed By	TDL
Drawn By	PZ
Checked By	HS
Approved By	JMJ
Date	07-15-1994

ATCHISON, TOPEKA & SANTA FE RAILWAY COMPANY

CENTRAL AVENUE UNDERPASS
GENERAL NOTES AND QUANTITIES

R-3944

Scale	Project No.	Drawing No.	Sheet
AS NOTED	06791	S-17	17 of 18

FILE: c:\06791\016\central7.dgn
DATE: 9-Aug-94 08:36

INDEXED 6-08-06 JH

For A.T.&S.F.
Date Explored: 3-10-93
Equipment: CME 55 Drill Rig
Hole Posit 11.90

Job Number: 92572-3
Boring Number: 175
Enclosure: "B-17"
Drilled By: TB

SPT Blows /6cm	Dry Density (pcf)	Field Moist. Content (%)	Rel. Comp. (%)	Sample Type	Visual Classification
		8.2%		Bulk	(SP) - (SM) Sand, fine to medium, with coarse, silt and gravel to 1/2", brown (7.5YR)
22/	122/	4.9%		Ring	
8/	102/	16.2%		Ring	(CL) - (ML) Sandy Silty Clay, fine, dark brown (7.5YR)
12/	114/	14.2%		Ring	
		10.5%		Bulk	(ML) Sandy Silt, fine to medium, with clay, brown
48/7"	121/	11.9%		Ring	(CL) - (ML) Sandy Silty Clay, fine to medium, with coarse, red brown
48/7"	130/	10.1%		Ring	(SM) Granodiorite recovered as Silty Sand, fine to medium, with coarse, red brown
48/4"	118/	9.1%		Ring	(SP) Granodiorite recovered as Sand, fine to medium, with coarse, red brown
48/2"	No Rec.			Ring	END OF BORING

REFUSAL AT 22.9'
REFUSAL AT 22.5' ON BEDROCK
FILL TO 14.0'
BORING CAVED TO 20.0'
NO FREE GROUNDWATER

For A.T.&S.F.
Date Explored: 3-22-93
Equipment: CME 55 Drill Rig
Hole Posit 11.87

Job Number: 92572-3
Boring Number: 176
Enclosure: "B-18"
Drilled By: TB

SPT Blows /6cm	Dry Density (pcf)	Field Moist. Content (%)	Rel. Comp. (%)	Sample Type	Visual Classification
		6.1%		Bulk	(SM) Silty Sand, fine to medium, with coarse and clay, brown (7.5YR)
20/	119/	7.8%		Ring	(ML) Sandy Silt, fine, with clay, brown (7.5YR)
		3.8%		Bulk	(SP) Sand, fine to medium, with coarse and gravel to 1/2", light brown (7.5YR)
12/No Rec.				Ring	
		6.8%		Bulk	(CL) - (ML) Silty Clay, with sand, fine, with medium, light red brown (7.5YR) to 10.0'?
34/	112/	7.5%		Ring	
48/7"	112/	7.5%		Ring	(SM) Granodiorite recovered as Silty Sand, fine to medium, with coarse and clay, brown
48/7"	112/	7.5%		Ring	
48/5"	114/	5.6%		Ring	
48/7"	120/	8.8%		Ring	

END OF BORING

REFUSAL AT 15.5'
NO REFUSAL
FILL TO 10.0'
BORING CAVED TO 27.0'
NO FREE GROUNDWATER

For A.T.&S.F.
Date Explored: 3-25-93
Equipment: CME 55 Drill Rig
Hole Posit 10.85

Job Number: 92572-3
Boring Number: 177
Enclosure: "B-19"
Drilled By: TB

SPT Blows /6cm	Dry Density (pcf)	Field Moist. Content (%)	Rel. Comp. (%)	Sample Type	Visual Classification
		13.2%		Bulk	(ML) Clayey Silt, fine to medium, brown (7.5YR)
9/	113/	14.2%		Ring	
		8.6%		Bulk	Clayey Silt, fine, red brown (7.5YR)
22/	84/	5.4%		Ring	
28/	101/	7.2%		Ring	Sandy Silt, fine, with clay and calcite, red brown
27/	116/	6.6%		Ring	
44/	120/	6.9%		Ring	(SC) - (SM) Silty Clayey Sand, fine to medium, with coarse, red brown
48/7"	123/	6.8%		Ring	(SM) Granodiorite recovered as Silty Sand, fine to medium, with coarse and clay, brown
48/4"	126/	5.3%		Ring	
74/	115/	10.8%		Ring	
84/10"	127/	7.3%		Ring	
63/	126/	7.8%		Ring	
		2.6%		Bulk	Granodiorite recovered as Silty Sand, fine to coarse, red brown
48/4"	127/	3.9%		Ring	
48/4"	125/	7.3%		Ring	
48/4"	128/	7.7%		Ring	

END OF BORING

REFUSAL AT 27.0'
REFUSAL AT 43.0' ON BEDROCK
FILL TO 12.0'
BORING CAVED TO 40.0'
NO FREE GROUNDWATER

SOIL CLASSIFICATION CHART

MAJOR DIVISIONS			GRAPH SYMBOL	LETTER SYMBOL	TYPICAL DESCRIPTIONS
COARSE GRAINED SOILS (MORE THAN 50% OF MATERIAL IS LARGER THAN NO. 200 SIEVE SIZE)	GRAVEL AND GRAVELLY SOILS	CLEAN GRAVELS (LITTLE OR NO FINES)		GW	WELL-GRADED GRAVELS, GRAVEL-SAND MIXTURES, LITTLE OR NO FINES
				GP	POORLY-GRADED GRAVELS, GRAVEL-SAND MIXTURES, LITTLE OR NO FINES
	(MORE THAN 50% OF COARSE FRACTION RETAINED ON NO. 4 SIEVE)	GRAVELS WITH FINES (APPRECIABLE AMOUNT OF FINES)		GM	SILTY GRAVELS, GRAVEL-SAND-SILT MIXTURES
				GC	CLAYEY GRAVELS, GRAVEL-SAND-CLAY MIX.
	SAND AND SANDY SOILS	CLEAN SAND (LITTLE OR NO FINES)		SW	WELL-GRADED SANDS, GRAVELLY SANDS, LITTLE OR NO FINES
				SP	POORLY-GRADED SANDS, GRAVELLY SANDS, LITTLE OR NO FINES
	(MORE THAN 50% OF COARSE FRACTION PASSES NO. 4 SIEVE)	SANDS WITH FINES (APPRECIABLE AMOUNT OF FINES)		SM	SILTY SANDS, SAND-SILT MIXTURES
				SC	CLAYEY SANDS, SAND-CLAY MIXTURES
FINE GRAINED SOILS	SILTS AND CLAYS	LIQUID LIMIT LESS THAN 50		ML	INORGANIC SILTS AND VERY FINE SANDS, ROCK FLOUR, SILTY OR CLAYEY FINE SANDS OR CLAYEY SILTS WITH SLIGHT PLASTICITY
				CL	INORGANIC CLAYS OF LOW TO MEDIUM PLASTICITY, GRAVELLY CLAYS, SANDY CLAYS, SILTY CLAYS, LEAN CLAYS
				OL	ORGANIC SILTS AND ORGANIC SILTY CLAYS OF LOW PLASTICITY
	SILTS AND CLAYS	LIQUID LIMIT GREATER THAN 50		MH	INORGANIC SILTS, MICACEOUS OR DIATOMACEOUS FINE SAND OR SILTY SOILS
				CH	INORGANIC CLAYS OF HIGH PLASTICITY, FAT CLAYS
				OH	ORGANIC CLAYS OF MEDIUM TO HIGH PLASTICITY, ORGANIC SILTS
HIGHLY ORGANIC SOILS				PT	PEAT, MUCK, SWAMP SOILS WITH HIGH ORGANIC CONTENTS

GRADATION CHART

IMPERIAL SIZE		PARTICLE SIZE			
		LOWER LIMIT		UPPER LIMIT	
		MILLIMETERS	SIEVE NO. SIZE	MILLIMETERS	SIEVE SIZE
SAND	FINE	.074	#200	0.42	#40
	MEDIUM	0.42	#40	2.00	#10
	COARSE	2.00	#10	4.76	#4
GRAVEL	FINE	4.76	#4	19.1	3/4"
	COARSE	19.1	3/4"	76.2	3"
COBBLES		76.2	3"	304.8	12"
BOULDERS		304.8	12"		

FOR STANDARD * CLEAR SQUARE OPENINGS

PLASTICITY CHART

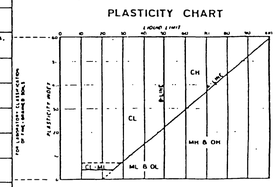

UNIFIED SOIL CLASSIFICATION SYSTEM

C·H·J· INCORPORATED

THE ATCHISON, TOPEKA AND SANTA FE RAILWAY COMPANY
TRACK EXPANSION REQUIRED FOR COMMUTER OPERATIONS
ON THE SAN BERNARDINO SUBDIVISION

NOVEMBER 18, 1992

Base Map Prepared By: Engineering and Technology Development

C.E. DRAWING NO. 12733

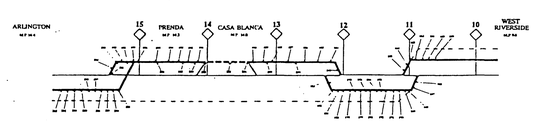

LEGEND:
- CONSTRUCT TRACKAGE SHOWN
- UPGRADE TRACKAGE SHOWN
- REMOVE TRACKAGE SHOWN
- EXPLORATORY BORING LOCATIONS
- EXISTING TRACK SHOWN
- PROPOSED 3RD. M/L

ALIGNMENT MAP

LINE A.T. & S.F. R.R.	MP 13.6 TO MP 15.9 WEST RIVERSIDE STATION TO ARLINGTON STATION (C74) RIVERSIDE, CALIFORNIA	ENCLOSURE "A-1"
DATE AUGUST 1993		JOB NUMBER 92572-3

C·H·J· INCORPORATED

RECEIVED
FEB 28 1995
DEPT. OF PUBLIC WORKS

Issue No.	Description	Date	Drwn.	Chkd.	Resp. Engr.	Proj. Mgr.

C·H·J· INCORPORATED

Designed By P.R.
Drawn By P.R.
Checked By GRG
Approved By R.M.M.
Date 6/21/94

ATCHISON, TOPEKA & SANTA FE RAILWAY COMPANY

CENTRAL AVENUE UNDERPASS LOG OF TEST BORINGS

R-3944

Scale	Project No.	Drawing No.	Sheet
	06791	S-18	18 of 18

INDEXED 6-08-06 GH