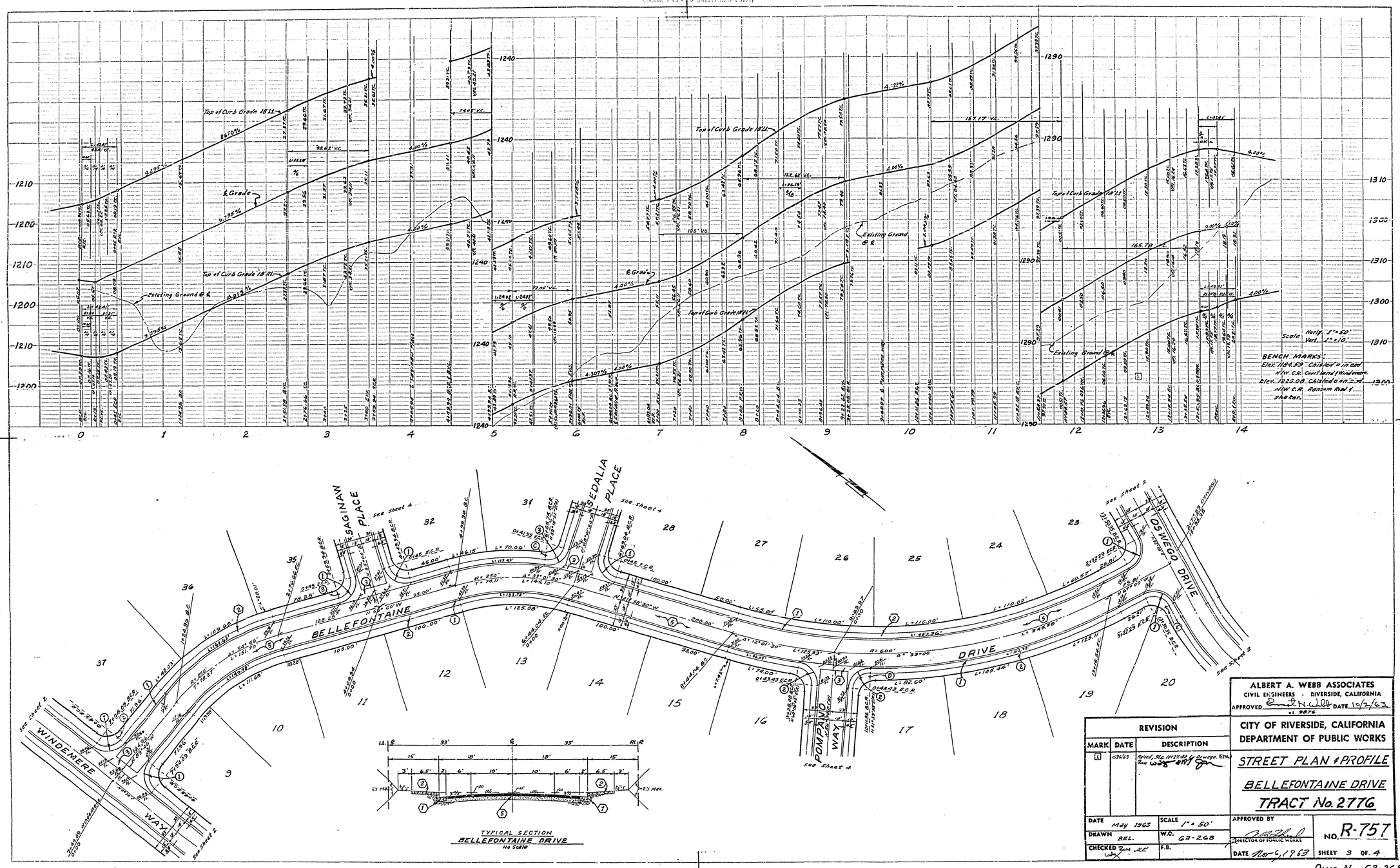

ALBERT A. WEBB ASSOCIATES
CIVIL ENGINEERS - RIVERSIDE, CALIFORNIA
APPROVED [signature] DATE 10/2/63
No. 9876

REVISION		
MARK	DATE	DESCRIPTION
1	11/26/63	Rolled, Sta. 10+27.40 to Oswego, Elev. Row [signature]

CITY OF RIVERSIDE, CALIFORNIA
DEPARTMENT OF PUBLIC WORKS

STREET PLAN & PROFILE
BELLEFONTAINE DRIVE
TRACT No. 2776

DATE May 1963	SCALE 1" = 50'	APPROVED BY [signature] DIRECTOR OF PUBLIC WORKS	NO. R-757
DRAWN BEL.	W.O. 63-268		
CHECKED [signature]	F.B.	DATE Nov 6, 1963	SHEET 3 OF 4

Dwg. No. 63-268-A

PROFILE
NOTE BOOK
NO.
SURVEYED
PLOTTED
GRADES CHECKED
ALIGNMENT CHECKED
RT. OF WAY CHECKED

PLAN
NOTE BOOK
NO.
SURVEYED
PLOTTED
ALIGNMENT CHECKED
RT. OF WAY CHECKED

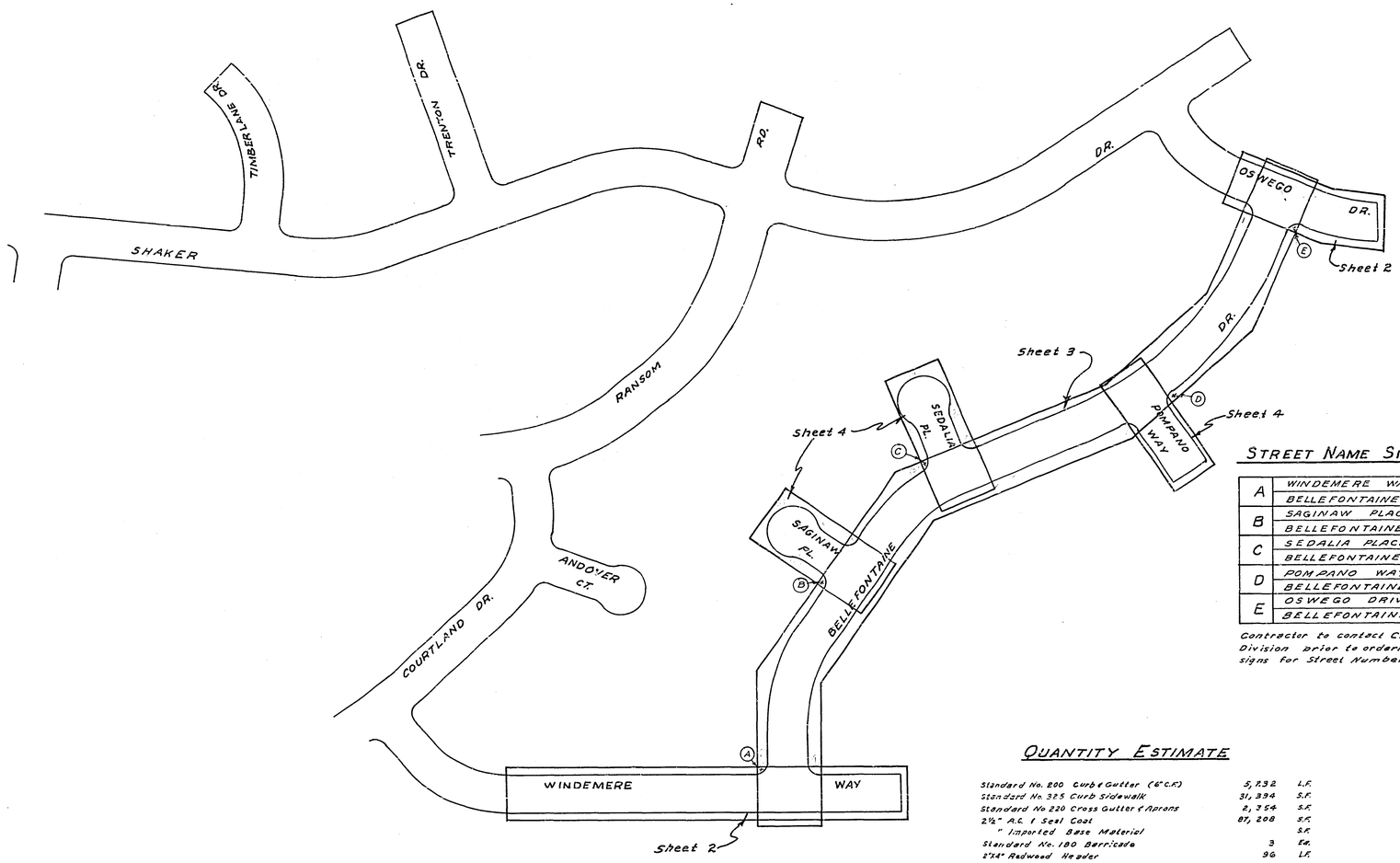

GENERAL NOTES:

1. It shall be the responsibility of the Contractor to clear the right of way in accordance with the provisions of the law as it affects each utility including irrigation lines and appurtenances and at no cost to the City.
2. Construction shall be in accordance with the City of Riverside, Department of Public Works Specifications No. 461 and Standard Drawings.
3. Prime coat and paint binder are required.
4. The City of Riverside will take a soil test to determine the requirement on Imported Base Material after the streets have been prepared to rough grade.
5. Street name signs and posts to be furnished and installed by the Subdivider per City Specifications and Standard Drawing No. 662.
6. Contractor shall not place rock Larger then 6" within 5' of proposed sewer as shown on City of Riverside Plan No. S-439. & S-442

CURB RETURN DATA:

No.	Δ	R	T	L
1	90°	27'	27'	42.41'
2	85°59'53"	27'	25.18'	40.53'
3	81°13'32"	27'	23.14'	38.28'
4	255°43'38"	30'		133.90'
5	37°51'49"	27'	9.27'	17.84'

STREET NAME SIGN SCHEDULE

A	WINDEMERE WAY
	BELLEFONTAINE DRIVE
B	SAGINAW PLACE
	BELLEFONTAINE DRIVE
C	SEDALIA PLACE
	BELLEFONTAINE DRIVE
D	POMPANO WAY
	BELLEFONTAINE DRIVE
E	OSWEGO DRIVE
	BELLEFONTAINE DRIVE

Contractor to contact City Traffic Division prior to ordering Street name signs for Street Numbers.

CONSTRUCTION NOTES:

1. Const. Curb & Gutter Std. Dwg. No. 200. (6" C.F.)
2. Const. Curb Sidewalk Std. Dwg. No. 325.
3. Const. Cross Gutter and Aprons Std. Dwg. No. 220.
4. Remove Existing Paving and Overlay as directed in the Field if necessary to produce a smooth Join.
5. Const. 2½" A.C. & Seal Coat over " I.B.M.
6.
7. Const. Barricade Std. Dwg. No. 180.
8. Const. 2"X4" Redwood Header.

QUANTITY ESTIMATE

Standard No. 200 Curb & Gutter (6" C.F.)	5,732	L.F.
Standard No. 325 Curb Sidewalk	31,394	S.F.
Standard No 220 Cross Gutter & Aprons	2,354	S.F.
2½" A.C. & Seal Coat	87,208	S.F.
" Imported Base Material		S.F.
Standard No. 180 Barricade	3	Ea.
2"X4" Redwood Header	96	L.F.

ALBERT A. WEBB ASSOCIATES
CIVIL ENGINEERS - RIVERSIDE, CALIFORNIA
APPROVED Ernest N. Webb DATE 10/2/63
R.E. 9876

CITY OF RIVERSIDE, CALIFORNIA
DEPARTMENT OF PUBLIC WORKS

INDEX MAP
STREET IMPROVEMENTS
TRACT No. 2776

REVISION		
MARK	DATE	DESCRIPTION

DATE Sept 1963 | SCALE 1" = 100' | APPROVED BY [signature] DIRECTOR OF PUBLIC WORKS | NO. R-757
DRAWN B.E.L. | W.O. 63-268
CHECKED Ron [signature] | F.B. 498 | DATE Nov 6, 1963 | SHEET 1 OF 4

DWG. No. 63-268-A

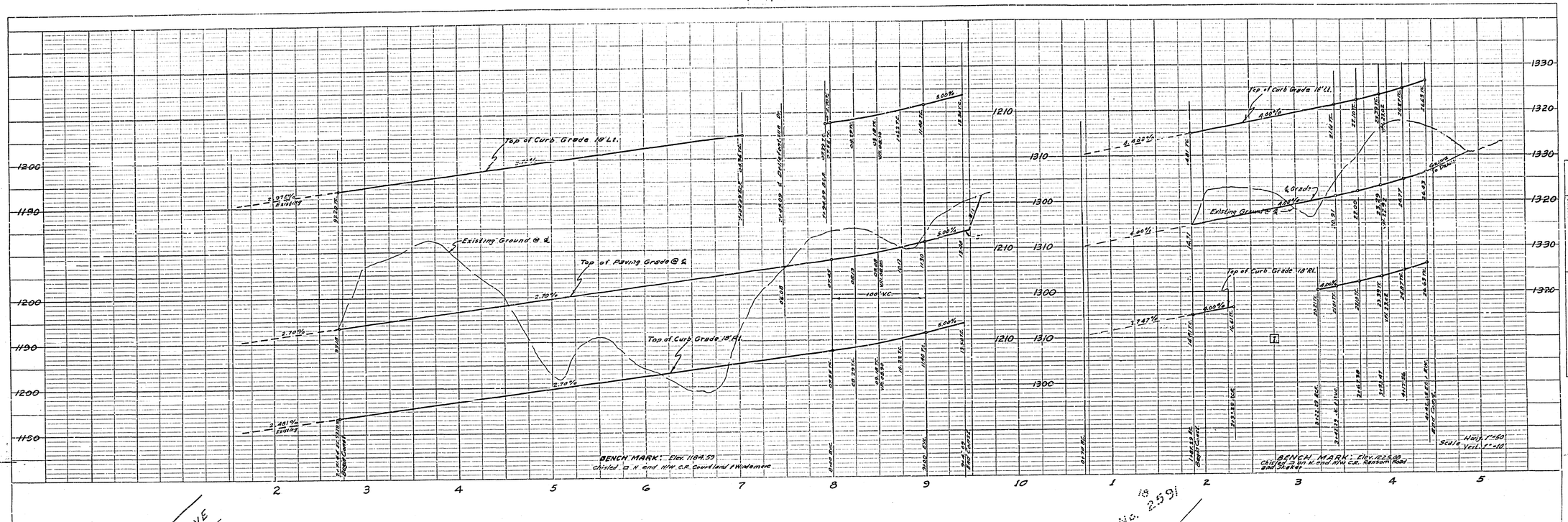

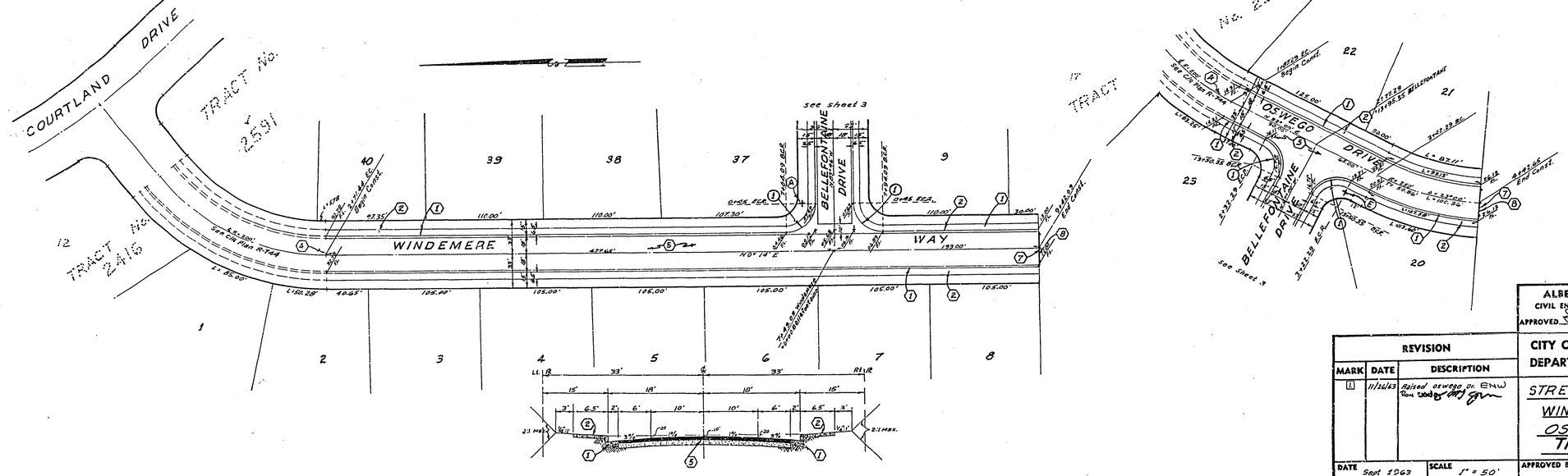

REVISION		
MARK	DATE	DESCRIPTION
1	11/26/63	Raised Oswego Dr. ENW

ALBERT A. WEBB ASSOCIATES
CIVIL ENGINEERS - RIVERSIDE, CALIFORNIA
APPROVED DATE 10/2/63

CITY OF RIVERSIDE, CALIFORNIA
DEPARTMENT OF PUBLIC WORKS

STREET PLAN & PROFILE
WINDEMERE WAY
OSWEGO DRIVE
TRACT No. 2776

DATE Sept 1963	SCALE 1" = 50'	APPROVED BY	
DRAWN B.E.L.	W.O. 63-268	DIRECTOR OF PUBLIC WORKS	NO. R-757
CHECKED Ross J.K.	F.B. 498	DATE Nov 6, 1963	SHEET 2 OF 4

DWG. No. 63-268-A

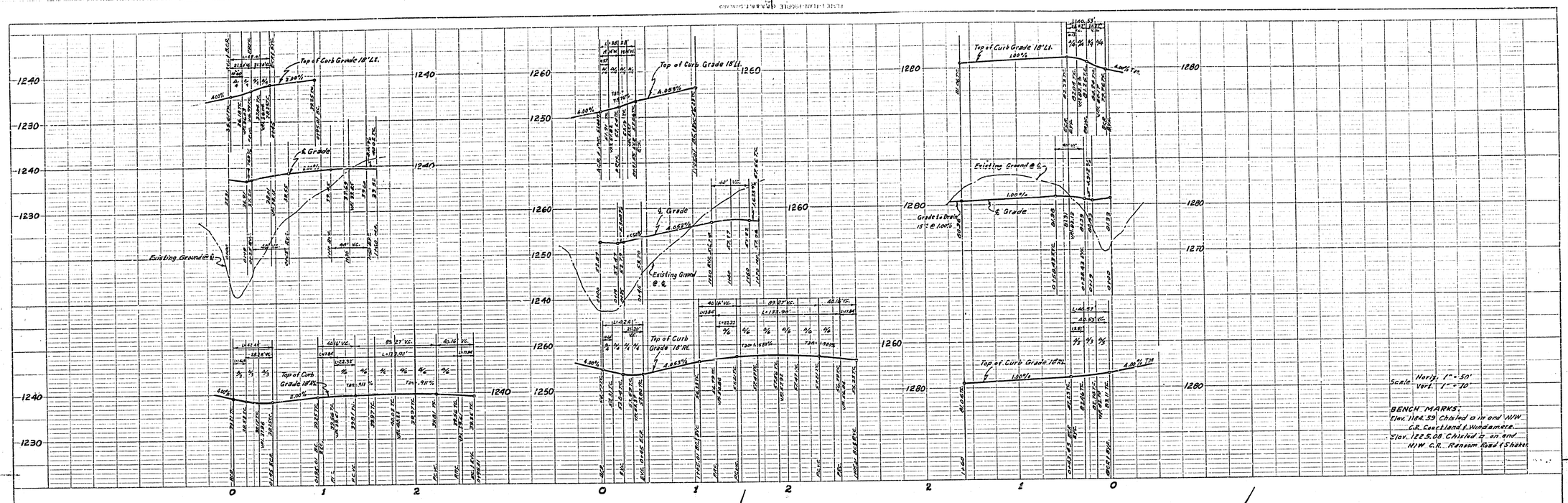

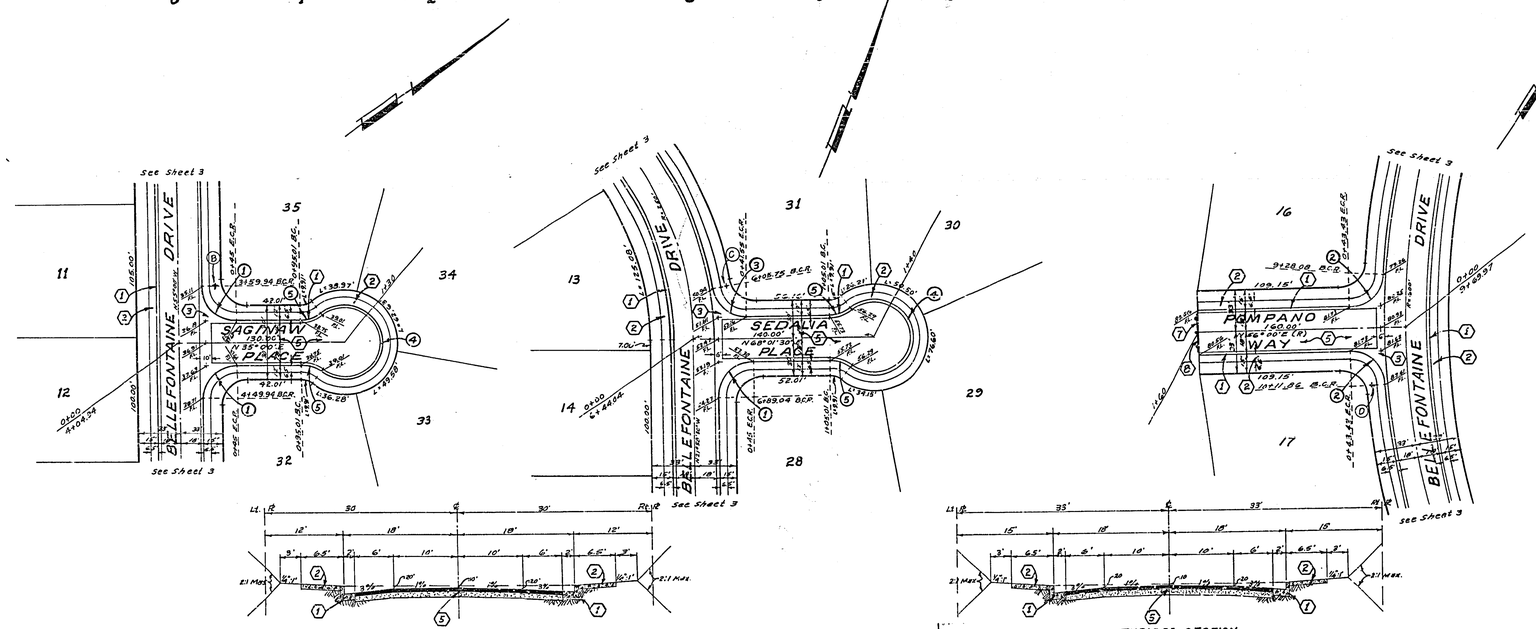

ALBERT A. WEBB ASSOCIATES
CIVIL ENGINEERS - RIVERSIDE, CALIFORNIA
APPROVED DATE 10/2/63
R.E. 9876

REVISION		
MARK	DATE	DESCRIPTION

CITY OF RIVERSIDE, CALIFORNIA
DEPARTMENT OF PUBLIC WORKS

STREET PLAN & PROFILE
SAGINAW PL., SEDALIA PL.
& POMPANO WAY
TRACT No. 2776

DATE May 1963	SCALE 1" = 50'	APPROVED BY DIRECTOR OF PUBLIC WORKS	NO. R-757
DRAWN B.E.L.	W.O. 63-268		
CHECKED	F.B.	DATE Mar 6 1963	SHEET 4 OF 4

DWG. No. 63-268-A