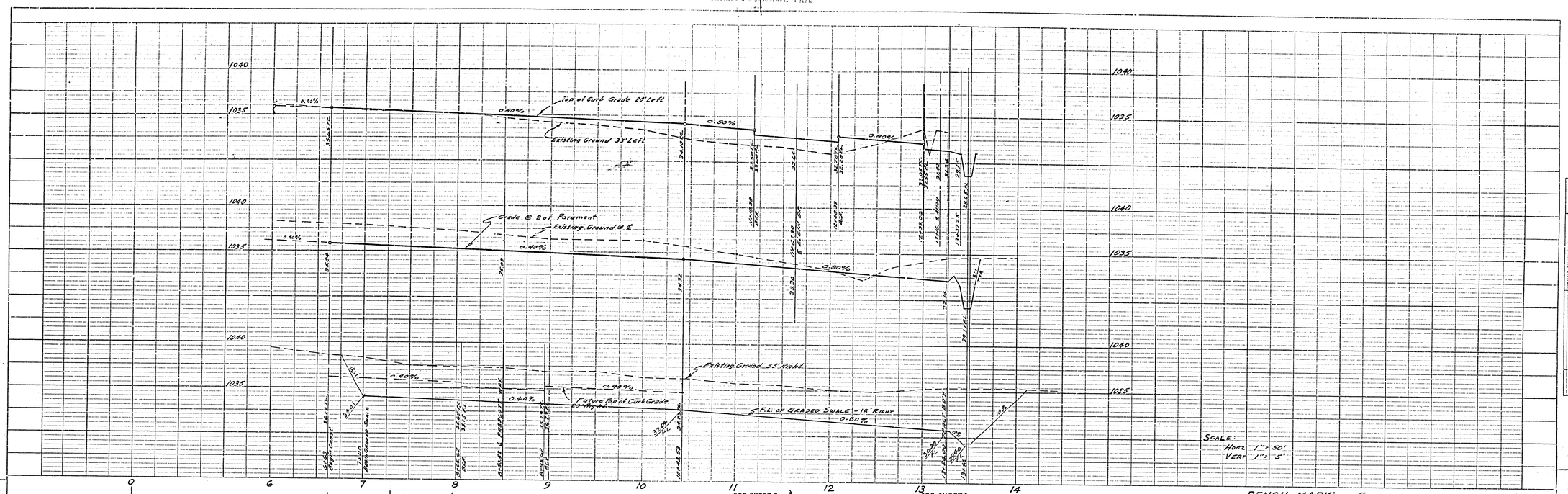

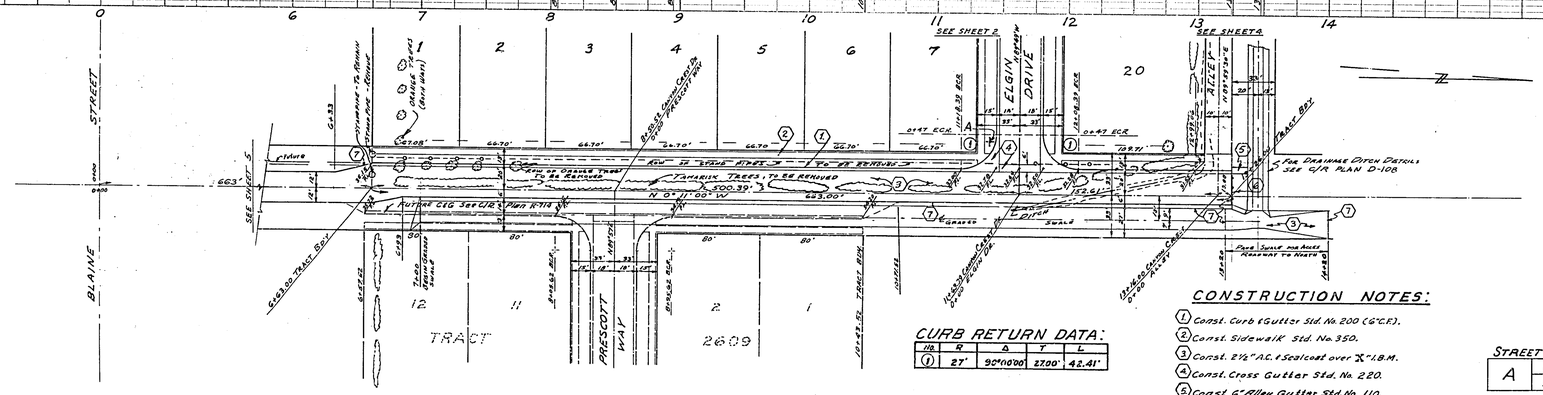

BENCH MARK:

Elev. 1037.03
Chisel ⊠ Sly end B.C.R. S.E. Cor. of Canyon Crest & Blaine St.

GENERAL NOTES:

1. It shall be the responsibility of the contractor to clear the right of way in accordance with the provisions of law or it affects each utility including irrigation lines and appurtenances and at no cost to the city.
2. Construction shall be in accordance with the City of Riverside, Department of Public Works, Specifications No. 461 and Standard Drawings.
3. Prime coat, seal coat, and paint binder are required.
4. Grading will require a permit under Ordinance 3093 for a cut or fill exceeding 100 cubic yards, or a fill over one foot in depth.
5. The City of Riverside will take a soil test to determine the requirement of imported base material after the streets have been prepared to rough grade. Construction is to notify City of Riverside when rough grading is accomplished.
6. Contractor to furnish & install street name sign and post per std dwg No. 662.

CONSTRUCTION NOTES:

1. Const. Curb & Gutter Std. No. 200 (6" C.F.).
2. Const. Sidewalk Std. No. 350.
3. Const. 2½" A.C. & Seal coat over X" I.B.M.
4. Const. Cross Gutter Std. No. 220.
5. Const. 6" Alley Gutter Std. No. 110.
6. Const. Barricade Std. No. 180.
7. Const. 2"X4" Redwood Header.
8. Const. Driveway Approach Std. No 302 A=20', B=34'
9. Const. Chain Link Fence Std. No. 900 (6')

CURB RETURN DATA:

No.	R	Δ	T	L
1	27'	90°00'00"	27.00'	42.41'

STREET NAME SIGN SCHEDULE

A	CANYON CREST DRIVE	≥ 2900
	ELGIN DRIVE	≥ 2900

CONTACT TRAFFIC DIVISION - 686-7575 EXT 246 FOR STREET NUMBERS BEFORE ORDERING SIGNS.

QUANTITY ESTIMATE:

Curb & Gutter Std. No. 200 (6" C.F.)	2,104	L.F.
Sidewalk Std. No. 350	9,748	S.F.
2½" A.C. & Seal coat	82,392	S.F.
Cross Gutter Std No. 220	1,133	S.F.
6" Conc. Alley Gutter Std. No. 110	4,961	S.F.
X" Imported Base Material	1,350	C.Y.
Barricade Std. No. 180.	3	Ea.
2"X4" Redwood Header	5,010	L.F.
Driveway Approach Std. No. 302	3	Ea.
6' Chain Link Fence Std. No. 900	1,011	L.F.

CANYON CREST DRIVE

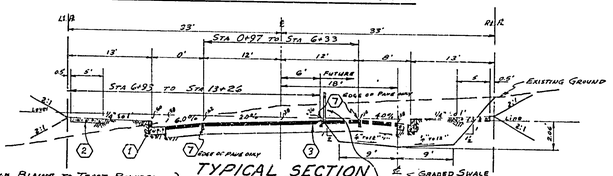

△ I.B.M.
8" FROM BLAINE TO TRACT BOUNDARY
6" FROM TRACT BDRY TO STA 9+00
3" FROM STA 9+00 TO STA 13+26

TYPICAL SECTION
CANYON CREST DR.
NO SCALE

ALBERT A. WEBB ASSOCIATES
CIVIL ENGINEERS - RIVERSIDE, CALIFORNIA
APPROVED Ernest N. Webb R.E. 9876 DATE 12/20/63

REVISION		
MARK	DATE	DESCRIPTION
△	6-2-64	Add I.B.M. INFO AW

CITY OF RIVERSIDE, CALIFORNIA
DEPARTMENT OF PUBLIC WORKS

STREET PLAN & PROFILE
CANYON CREST DR.
TRACT No. 2602

DATE Dec '63	SCALE As Shown	APPROVED BY	
DRAWN AW	W.O. 63-10	DIRECTOR OF PUBLIC WORKS	NO. R-774
CHECKED	F.P. 517	DATE 2-3-64	SHEET 1 OF 5

DWG. No. 63-10-A

PROFILE: NOTE BOOK NO. ___ SURVEYED ___ PLOTTED ___ GRADES CHECKED ___ R.C.E. 16902 STRUCTURE ___ DATE ___ BY ___

PLAN: NOTE BOOK NO. ___ SURVEYED ___ PLOTTED ___ ALIGNMENT CHECKED ___ RT. OF WAY CHECKED ___ DATE ___ BY ___

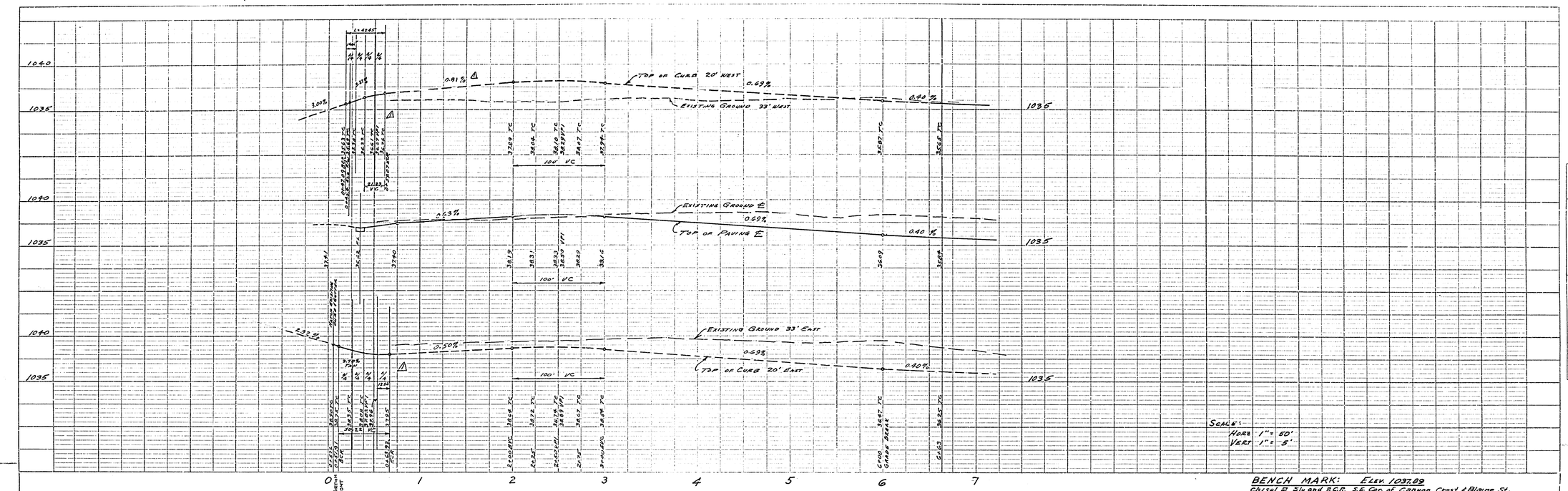

BENCH MARK: Elev. 1037.89
Chisel ☒ Sly and B.C.P. S.E. Cor. of Canyon Crest & Blaine St.

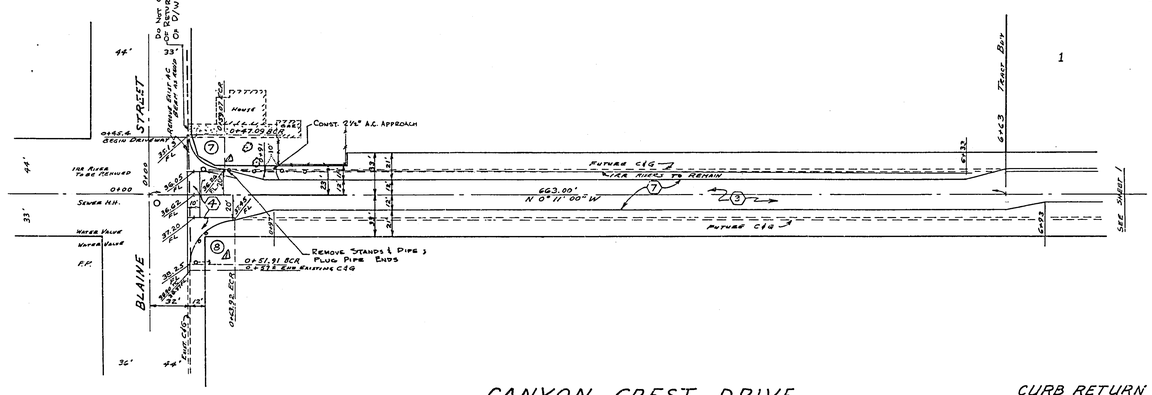

CURB RETURN DATA:

No.	R	Δ	T	L
7	27'	90°05'05"	27.04'	42.45'
8	32'	89°55'00"	31.94'	50.22'

ALBERT A. WEBB ASSOCIATES
CIVIL ENGINEERS - RIVERSIDE, CALIFORNIA
APPROVED Albert A. Webb DATE 1/20/64
R.E. 9876

REVISION		
MARK	DATE	DESCRIPTION
4	4-22-64	ENW wdg 4-27-64 Lower grade @ 8 & change radius at 8 by AW

CITY OF RIVERSIDE, CALIFORNIA
DEPARTMENT OF PUBLIC WORKS

STREET PLAN & PROFILE

CANYON CREST DR.

TRACT No. 2602

DATE	JAN '64	SCALE	As Shown
DRAWN	AW	W.O.	63-10
CHECKED		F.B.	517

APPROVED BY
DIRECTOR OF PUBLIC WORKS
DATE 2-3-64

NO. R-774

SHEET 5 OF 5

DWG. No. 63-10-A

PROFILE: SURVEYED, PLOTTED, ALIGNMENT CHECKED, GRADES & NOTES CHECKED, STRUCTURE DATA VERIFIED. NOTE BOOK NO. ____ BY ____ DATE ____

PLAN: SURVEYED, PLOTTED, ALIGNMENT CHECKED, RT. OF WAY CHECKED. NOTE BOOK NO. ____ BY ____ DATE ____

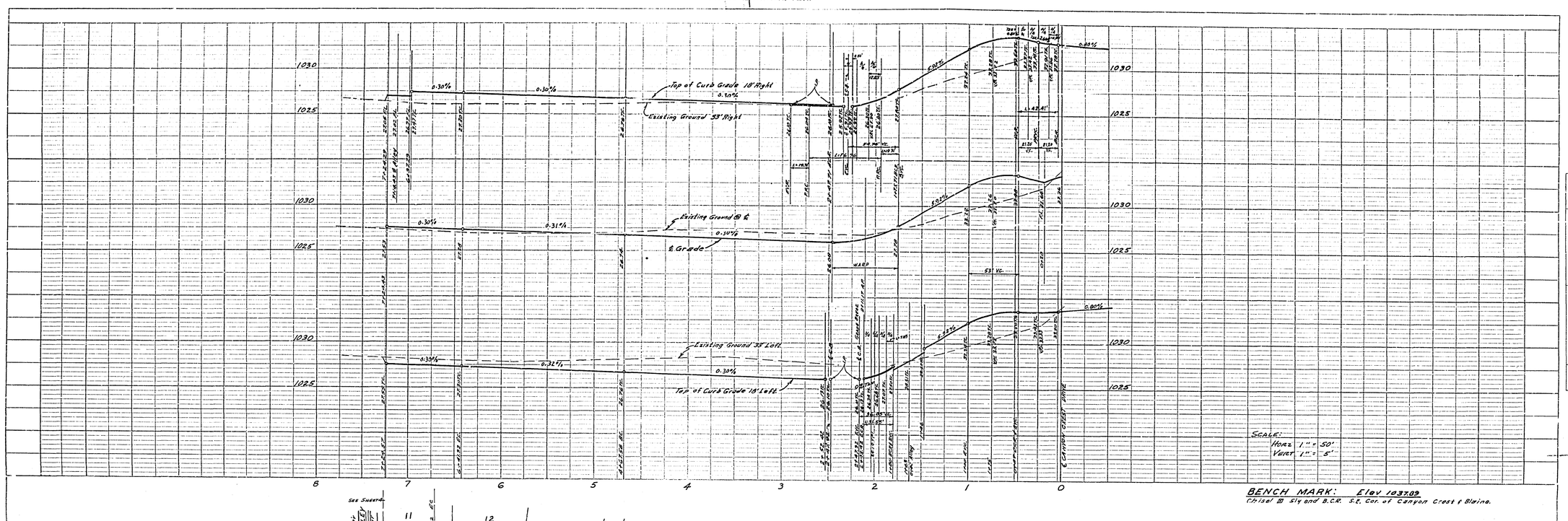

BENCH MARK: Elev 1037.09
Chisel ⊠ Sly and B.C.R. S.E. Cor. of Canyon Crest & Blaine.

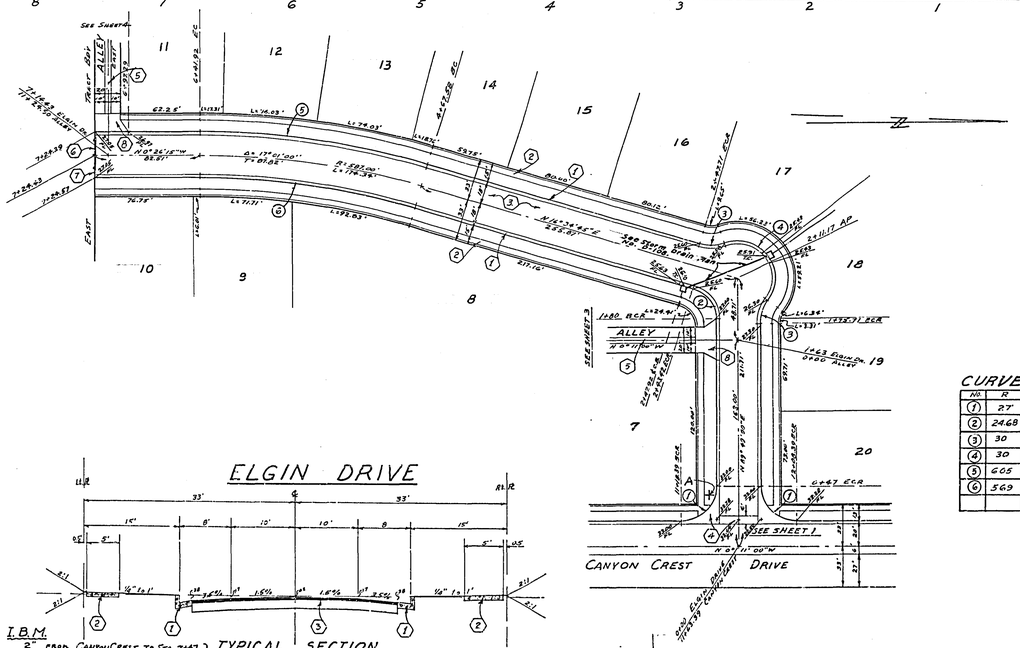

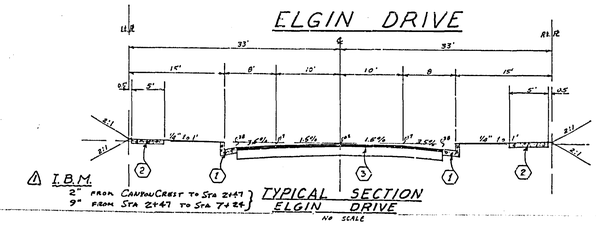

△1 I.B.M.
2" FROM CANYON CREST TO STA 2+47
9" FROM STA 2+47 TO STA 7+24
TYPICAL SECTION
ELGIN DRIVE
NO SCALE

CURVE & CURB RETURN DATA:

No.	R	Δ	T	L
1	27'	90°00'00"	27.00'	42.41'
2	24.68	73°14'15"	18.34'	31.55'
3	30	36°52'11"	10.00'	19.31
4	30	146°58'38"		76.96
5	60.5	17°01'00"	90.51	179.68
6	56.9	17°01'00"	85.12	168.99

PROFILE
SURVEYED
PLOTTED
CHECKED
NOTE BOOK
NO.
STRUCTURE NOTATIONS CHKD.
BY
DATE

PLAN
SURVEYED
PLOTTED
ALIGNMENT CHECKED
ST. OF WAY CHECKED
NOTE BOOK
NO.
BY
DATE

ALBERT A. WEBB ASSOCIATES
CIVIL ENGINEERS - RIVERSIDE, CALIFORNIA
APPROVED [signature] DATE 12/30/63
R.E. 9876

REVISION		
MARK	DATE	DESCRIPTION
△1	6-2-64	ADD IBM INFO AW

CITY OF RIVERSIDE, CALIFORNIA
DEPARTMENT OF PUBLIC WORKS

STREET PLAN & PROFILE

ELGIN DRIVE

TRACT No. 2602

DATE	DEC '63	SCALE	AS SHOWN
DRAWN	AW	W.O.	63-10
CHECKED	[signature]	F.B.	517

APPROVED BY [signature]
DIRECTOR OF PUBLIC WORKS
DATE 2-3-64

NO. R-774
SHEET 2 OF 5

DWG. No. 63-10-A

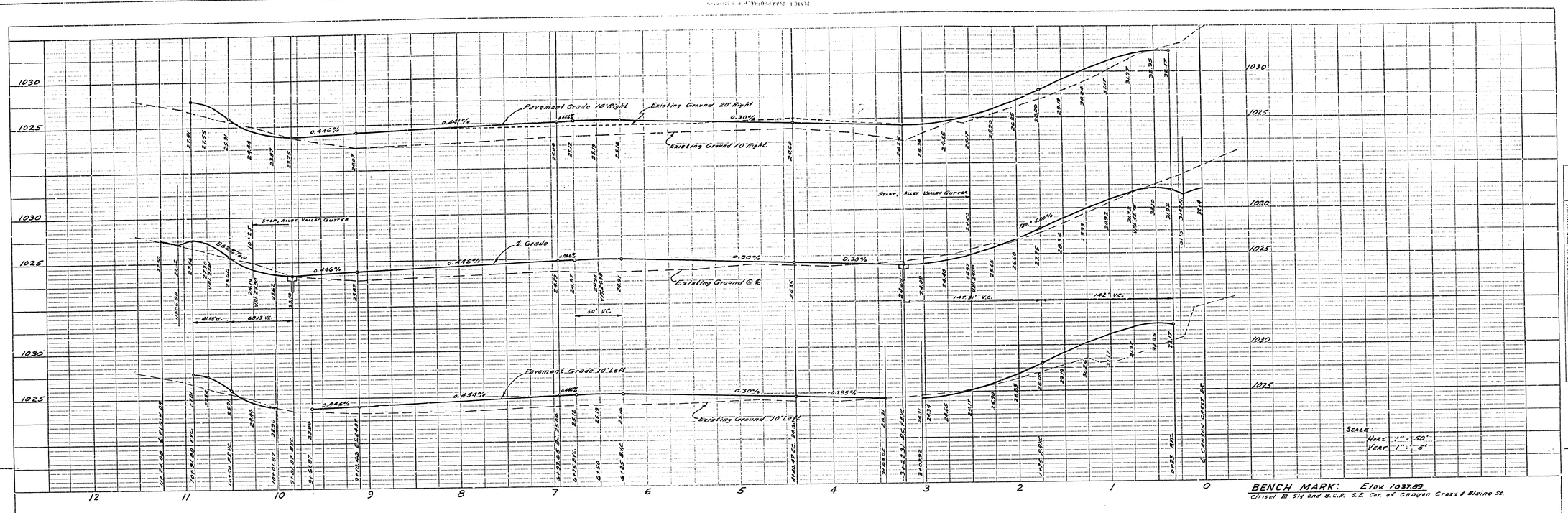

BENCH MARK: Elev 1037.89
Chisel ⊠ Sly and B.C.R. S.E. Cor. of Canyon Crest & Blaine St.

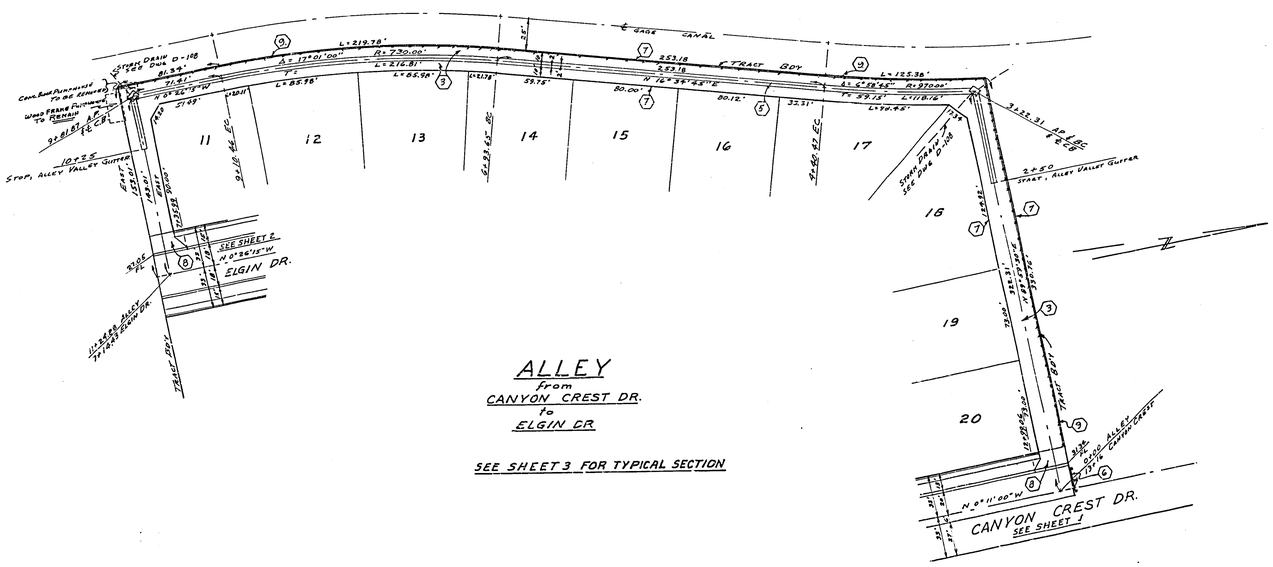

ALLEY
from
CANYON CREST DR.
to
ELGIN DR

SEE SHEET 3 FOR TYPICAL SECTION

PROFILE		BY	DATE
NOTE BOOK NO.	SURVEYED		
	PLOTTED		
	GRADES CHECKED		
	R.M.'S NOTED		
	STRUCTURE NOTATNS CHKD.		

PLAN		BY	DATE
NOTE BOOK NO.	SURVEYED		
	PLOTTED		
	ALIGNMENT CHECKED		
	RT. OF WAY CHECKED		

ALBERT A. WEBB ASSOCIATES
CIVIL ENGINEERS - RIVERSIDE, CALIFORNIA
APPROVED [signature] DATE 12/30/63
R.E. 9876

CITY OF RIVERSIDE, CALIFORNIA
DEPARTMENT OF PUBLIC WORKS

REVISION		
MARK	DATE	DESCRIPTION

STREET PLAN & PROFILE
ALLEY
from
CANYON CREST DR.
to
ELGIN DR.
TRACT No. 2602

DATE Dec '63	SCALE As Shown	APPROVED BY [signature] DIRECTOR OF PUBLIC WORKS	NO. R-774
DRAWN AW	W.O. 63-10		
CHECKED [signature]	F.S. 517	DATE 2-3-64	SHEET 4 OF 5

DWG. No. 63-10-A

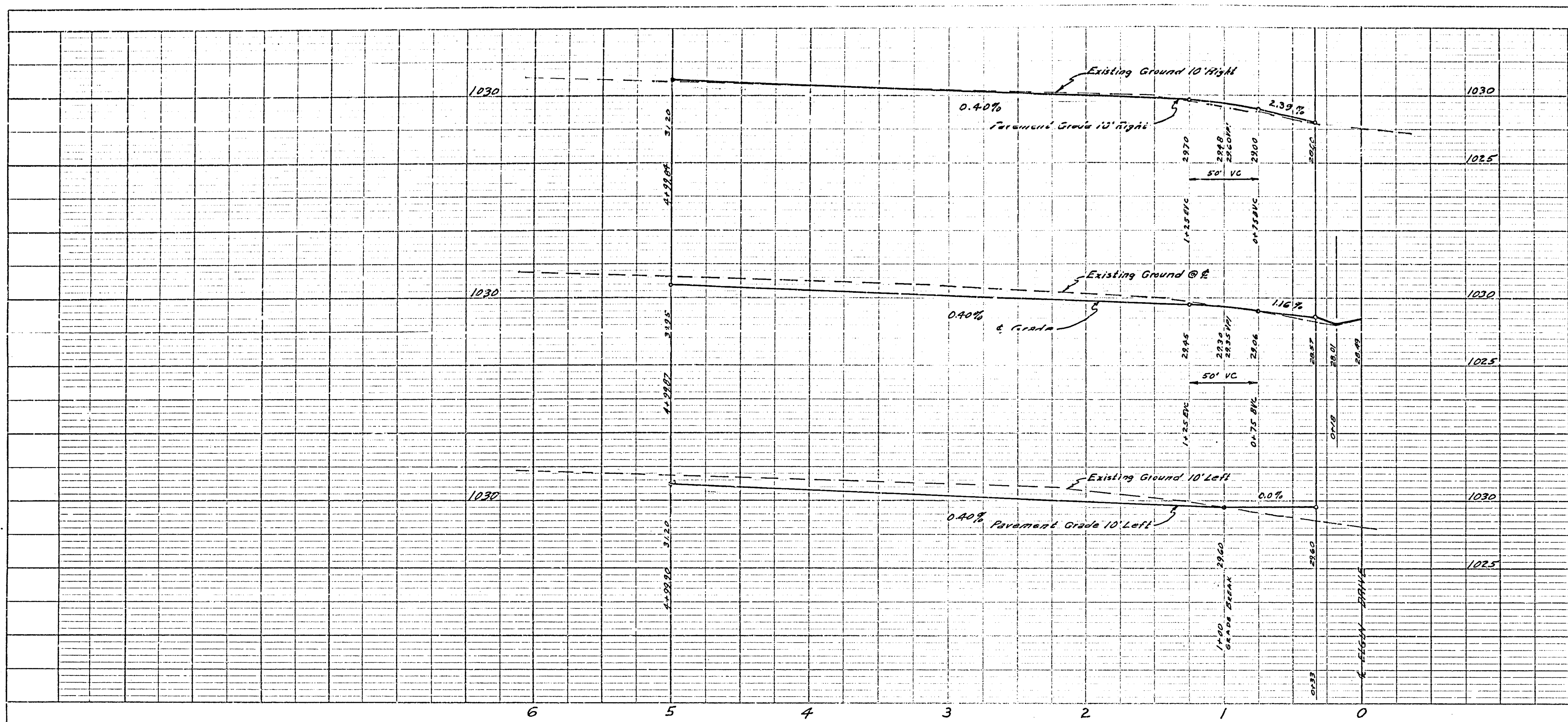

BENCH MARK: Elev. 1037.89
Chisel ⊠ Sly end B.C.R. S.E. Cor. of Canyon Crest & Blaine St.

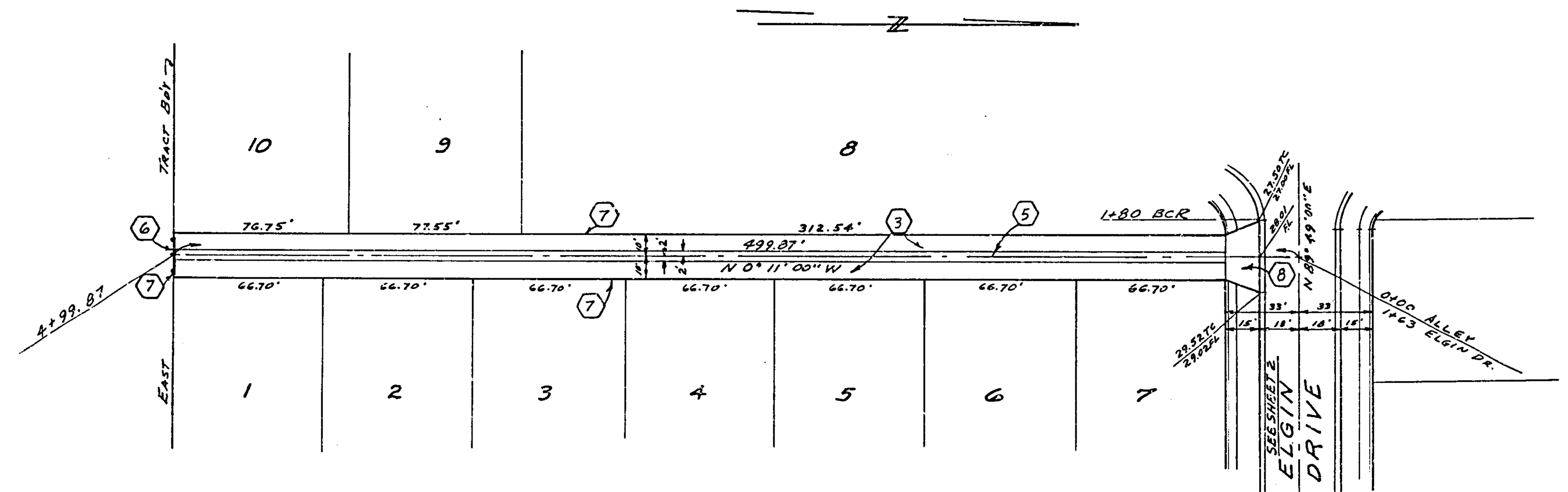

ALLEY
from
ELGIN DRIVE
to
SOUTH TRACT BOUNDARY

△1 I.B.M.
5" ELGIN DR TO TRACT BDRY
3" CANYON CREST DR TO ELGIN DR

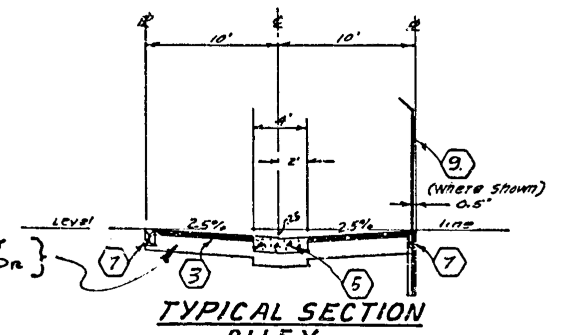

TYPICAL SECTION
ALLEY
NO SCALE

ALBERT A. WEBB ASSOCIATES
CIVIL ENGINEERS · RIVERSIDE, CALIFORNIA
APPROVED R.E. 9876 DATE 12/30/63

REVISION		
MARK	DATE	DESCRIPTION
△1	6-2-64	ADD I.B.M. INFO AW

CITY OF RIVERSIDE, CALIFORNIA
DEPARTMENT OF PUBLIC WORKS

STREET PLAN & PROFILE
ALLEY
from
ELGIN DRIVE
to
SOUTH TRACT BOUNDARY
TRACT No. 2602

DATE DEC '63 | SCALE AS SHOWN
DRAWN AW | W.O. 63-10
CHECKED | F.B. 517

APPROVED BY
DIRECTOR OF PUBLIC WORKS
DATE 2-3-64

NO. R-774
SHEET 3 OF 5

DWG. No. 63-10-A

PROFILE: NOTE BOOK No. ___ SURVEYED ___ PLOTTED ___ GRADES CHECKED ___ B.M.'S NOTED ___ STRUCTURE NOTATIONS CHKD. ___ BY DATE

PLAN: NOTE BOOK No. ___ SURVEYED ___ PLOTTED ___ ALIGNMENT CHECKED ___ RT. OF WAY CHECKED ___ BY DATE