CANYON SPRINGS ASSESSMENT DISTRICT
CONSTRUCTION PHASE II

SANITARY SEWER PLANS FOR:
PARCEL MAP NO. 19618
STAGE 1
CITY OF RIVERSIDE

CITY OF RIVERSIDE - SEWER NOTES:

SEWER NOTES - CITY OF RIVERSIDE

1. SEWER PROFILE ELEVATIONS ARE TO FLOW LINE (CONDUIT INVERT).
2. ALL STATIONS ARE SEWER CENTERLINE STATIONS.
3. A PLUG SHALL BE INSTALLED AND WILL REMAIN IN PLACE WHERE THE NEW SEWER CONNECTS WITH THE EXISTING SEWER UNTIL THE NEW SEWER IS ACCEPTED BY THE CITY.
4. PRIOR TO CONSTRUCTION OF SEWER, CONTRACTOR SHALL EXPOSE EXISTING SEWER AND VERIFY ITS EXISTING ELEVATION AND LOCATION. WHERE CONNECTING TO EXISTING MANHOLE AND INLET STUB OF PROPER SIZE EXISTS, NO ALTERATIONS SHALL BE MADE TO EXISTING MANHOLE BASE OR STUB EXCEPT AS SPECIFICALLY AUTHORIZED BY CITY OF RIVERSIDE.
5. ALL FLAGGED ELEVATIONS SHALL BE STAKED IN THE FIELD BY THE PRIVATE ENGINEER.
6. IT SHALL BE THE RESPONSIBILITY OF THE CONTRACTOR TO CLEAR THE RIGHT OF WAY IN ACCORDANCE WITH THE PROVISIONS OF LAW AS IT AFFECTS EACH UTILITY INCLUDING IRRIGATION LINES AND APPURTENANCES AND AT NO COST TO THE CITY.
7. CONSTRUCTION SHALL BE IN ACCORDANCE WITH THE CITY OF RIVERSIDE DEPARTMENT OF PUBLIC WORKS, STANDARD DRAWINGS, AND THE STANDARD SPECIFICATIONS FOR PUBLIC WORKS CONSTRUCTION, 1985 EDITION.
8. MANHOLES SHALL BE CONSTRUCTED IN ACCORDANCE WITH STD. DWG. 500.
9. THE SEWER CONTRACTOR SHALL ADJUST ALL MANHOLE COVERS TO FINAL GRADE AFTER PAVING IS COMPLETED.
10. SEWER LATERALS SHALL BE CONSTRUCTED IN ACCORDANCE WITH STD. DWG. 562. LOCATIONS OF WYES AND LATERALS, WHERE NOT SHOWN ON THE PLANS, ARE TO BE DETERMINED IN THE FIELD PRIOR TO CONSTRUCTION, TO MISS DRIVEWAYS AND PROPOSED OR EXISTING FACILITIES. ALL LATERALS ARE TO BE 4" DIAMETER UNLESS OTHERWISE SHOWN ON THE PLANS.
11. WHERE GROUNDWATER IS ENCOUNTERED, ALL V.C.P. PIPE SHALL BE TREATED FOR ABSORPTION RESISTANCE WITH A MINIMUM 3% (BY WEIGHT) SOLUTION OF DOW-CORNING 722 SILICON OR A MINIMUM 4% BY VOLUME OF POLYVINYL ACRYLIC EMULSION. APPLICATION SHALL BE BY TOTAL IMMERSION.
12. NO FINISHED FLOOR ELEVATION SHALL BE LESS THAN 4' ABOVE THE SEWER FLOW LINE AT POINT OF CONNECTION WITHOUT HAVING A PROPER BACKWATER VALVE INSTALLED IN THE LATERAL.
13. QUANTITIES SHOWN ARE FOR INFORMATION ONLY AND THE CITY OF RIVERSIDE IS NOT RESPONSIBLE FOR THEIR ACCURACY.
14. THE PRIVATE ENGINEER SIGNING THESE PLANS IS RESPONSIBLE FOR ASSURING THE ACCURACY AND ACCEPTABILITY OF THE WORK HERON. IN THE EVENT OF DISCREPANCIES ARISING DURING CONSTRUCTION, THE PRIVATE ENGINEER SHALL BE RESPONSIBLE FOR DETERMINING AN ACCEPTABLE SOLUTION AND REVISING THE PLANS FOR APPROVAL BY THE CITY.
15. THE CONTRACTOR SHALL CALL IN A LOCATION REQUEST TO UNDERGROUND SERVICE ALERT (USA), PHONE NO. 1-800-422-4133, TWO WORKING DAYS BEFORE DIGGING. NO CONSTRUCTION PERMIT WILL BE ISSUED BY THE PUBLIC WORKS DEPARTMENT INVOLVING EXCAVATION FOR UNDERGROUND FACILITIES UNLESS THE APPLICANT HAS BEEN PROVIDED AN INQUIRY IDENTIFICATION NUMBER BY U.S.A.
16. THE PRIVATE ENGINEER PREPARING THESE PLANS SHALL BE RESPONSIBLE FOR PRESERVING OR RE-ESTABLISHING AND REFERENCING SURVEY MONUMENTS DESTROYED, DISTURBED OR BURIED AS A RESULT OF CONSTRUCTION SHOWN THEREON.

△2 REVISION DELTA WITH LETTER INDICATE CHANGES AFTER BID SET ISSUANCE DATE (9-26-85)

△1 REVISION DELTA WITH NUMBER INDICATE CHANGES AFTER APPROVAL DATE ( )

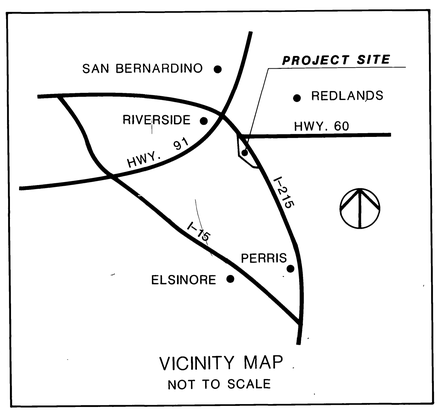

VICINITY MAP
NOT TO SCALE

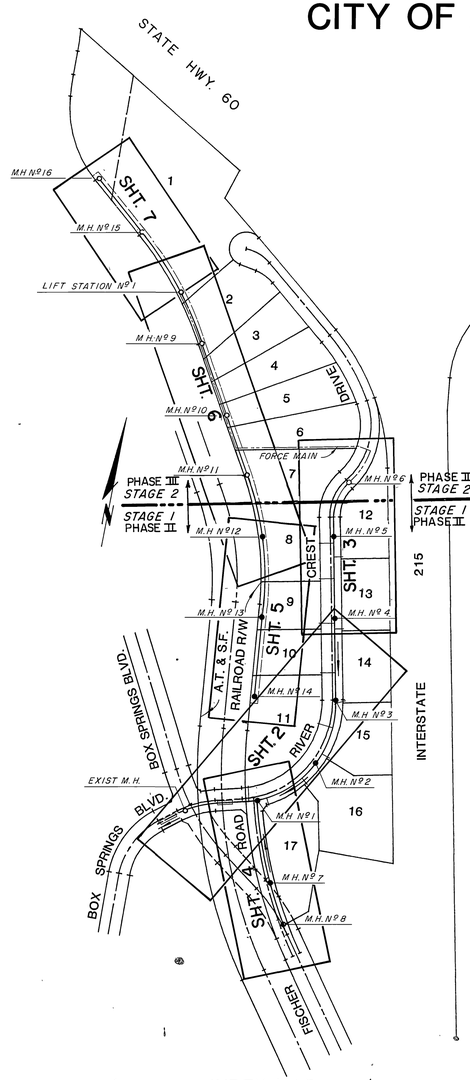

INDEX MAP
SCALE: 1"= 300'

LEGEND:

——— S ———	EXISTING SEWER MAIN
——┬—— S ——┬——	PROPOSED SEWER MAIN
●	PROPOSED SEWER MANHOLE
○	FUTURE SEWER MANHOLE

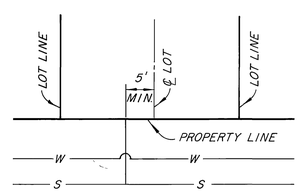

TYPICAL LOT SERVICE DETAIL
NOT TO SCALE

CONSTRUCTION NOTES AND QUANTITY ESTIMATE

	ITEM DESCRIPTION	UNIT	QUANTITY STAGE 1	QUANTITY STAGE 2	QUANTITY TOTAL
1	CONSTRUCT 8" VCP SEWER MAIN.	L.F.	2885.1	1606.04	4431.14
△2 2	CONSTRUCT 6" VCP SEWER LATERAL PER CITY OF RIVERSIDE STD. DWG. NO. 562.	L.F.	528	240	768
3	CONSTRUCT MANHOLE PER CITY OF RIVERSIDE STD. DWG. NO. 500.	EA	10	6	16
4	CONCRETE ENCASEMENT PER C/R PUD CWD-021,022 & 023				
5	CONSTRUCT 6" PVC FORCE MAIN. CL 160	L.F.		1300	1300
6	CONSTRUCT LIFT STATION PER DETAIL ON SHT. 8.		—	1	1
7	CONSTRUCT JACKED OR BORED 18" STEEL CASING 5/16" WALL.	L.F.	40	—	40

NOTIFICATIONS:

CONSTRUCTION WITHIN THE BOUNDARIES OF EDGEMONT COMMUNITY SERVICES DISTRICT
"CONTRACTOR SHALL NOTIFY EDGEMONT COMMUNITY SERVICES DISTRICT, CHUCK SANDERS, SUPT., AT (714) 653-5120 PRIOR TO STARTING CONSTRUCTION."

CONSTRUCTION AFFECTING OTHER UTILITIES.
"CONTRACTOR SHALL NOTIFY AT LEAST 48 HOURS PRIOR TO EXCAVATION."
SO. CALIF. GAS CO. AT ZENITH 5851
SO. CALIF. EDISON CO. AT (714) 657-5151
GENERAL TELEPHONE CO. AT (714) 925-2248
EASTERN MUNICIPAL WATER DISTRICT AT (714) 925-7676 EXT. 225
CITY OF RIVERSIDE AT (714) 787-7341
SOUTHERN PACIFIC PIPELINES AT (213) 629-6649
A.T.& S.F. RAILWAY; OFFICE ENGINEER AT (714) 884-2111

SEE ALSO SEWER NOTE NO. 15.

EXISTING UNDERGROUND STRUCTURES:

THE EXISTENCE AND LOCATION OF ANY UNDERGROUND UTILITY PIPES OR STRUCTURES OR CONDUITS SHOWN ON THESE PLANS ARE OBTAINED BY A SEARCH OF THE AVAILABLE RECORDS. TO THE BEST OF OUR KNOWLEDGE, THERE ARE NO EXISTING UTILITIES EXCEPT AS SHOWN ON THESE PLANS. THE CONTRACTOR IS REQUIRED TO TAKE DUE PRECAUTIONARY MEASURES TO PROTECT THE UTILITY LINES SHOWN AND ANY OTHER LINES NOT OF RECORD OR NOT SHOWN ON THESE PLANS. IT SHALL BE THE CONTRACTOR'S RESPONSIBILITY TO NOTIFY THE OWNERS OF THE UTILITIES OR STRUCTURES CONCERNED BEFORE STARTING WORK. CONTRACTOR FURTHER ASSUMES ALL LIABILITY AND RESPONSIBILITY FOR THE UNDERGROUND UTILITY PIPES, CONDUITS OR STRUCTURES SHOWN OR NOT SHOWN ON THESE PLANS.

NOTICE TO CONTRACTOR:

CONTRACTOR SHALL VERIFY ALL CONDITIONS AND DIMENSIONS AND SHALL REPORT ALL DISCREPANCIES TO THE ENGINEER PRIOR TO THE COMMENCEMENT OF WORK.

*AS-BUILT PER PLANS 1-12-06 GH

INDEXED

EASTERN MUNICIPAL WATER DISTRICT

Joe Van Sickle 11/27/85
REVIEWED BY: DATE

BENCH MARK: RIV. CO: B.M.
BRASS DISC MARKED M-64-69 IN THE CENTER OF A 8" x 16' HDWL @ THE S.W. CORNER OF HWY. 60 & DAY ST. 53" WEST OF DAY ST. & 23' S.E. OF N.E. CORNER OF A C.S.D.H. R/W FENCE.
ELEVATION = 1612.241

Greiner
Greiner Engineering of California
5225 Canyon Crest Drive
Bldg. 200, Suite 253
Riverside, California 92507
(714) 351-8328
(714) 788-7746
A Greiner Engineering, Inc. Company

PLANS PREPARED UNDER THE DIRECTION OF: Brian L. Lemon R.C.E. NO. 30534 DATE 9/23/85

MARK	REVISIONS	APPR.	DATE
△1	ADDED SEWER LATERAL QUANTITY		

DESIGNED BY W.E.D. DRAWN BY W.W. CHECKED BY B.L.J. PRED

CITY OF RIVERSIDE, CALIFORNIA
PUBLIC WORKS DEPARTMENT

APPROVED BY	BY	DATE
PRINCIPAL ENGINEER		11/23/86
PARK DEPARTMENT		
TRAFFIC DIVISION		
CHIEF PUB.WKS.ENGR.		

APPROVED BY William D. Kenedy
DIRECTOR OF PUBLIC WORKS
DATE 8-5-86

CANYON SPRINGS ASSESSMENT DISTRICT
CONSTRUCTION PHASE II
SANITARY SEWER PLANS FOR:
PARCEL MAP NO. 19618
STAGE 1
TITLE SHEET

SCALE:

ACCOUNT NO.
DRAWING NUMBER S-1410
SHEET 1 OF 8 △1

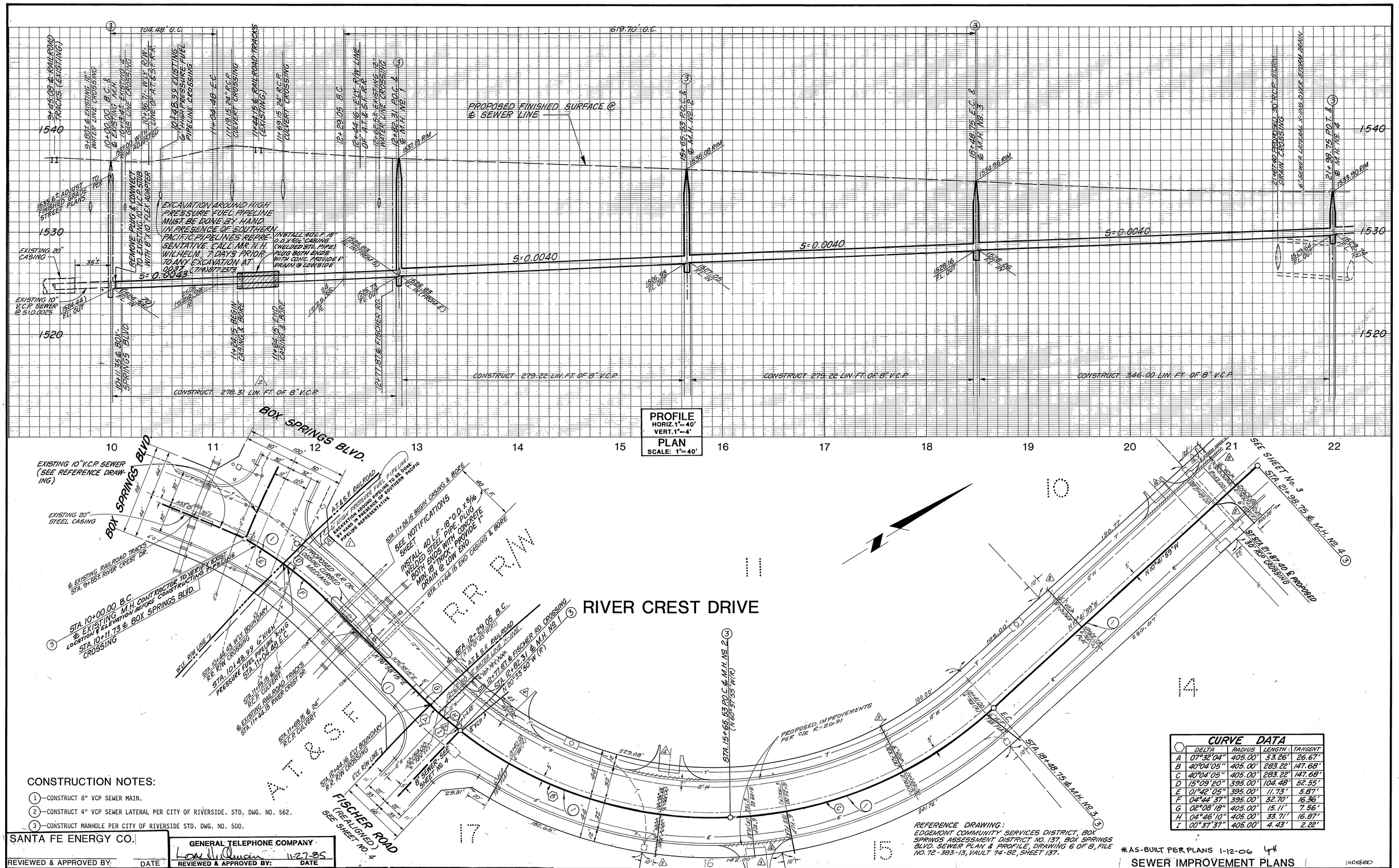

CONSTRUCTION NOTES:

1. CONSTRUCT 8" VCP SEWER MAIN.
2. CONSTRUCT 4" VCP SEWER LATERAL PER CITY OF RIVERSIDE. STD. DWG. NO. 562.
3. CONSTRUCT MANHOLE PER CITY OF RIVERSIDE STD. DWG. NO. 500.

CURVE DATA				
	DELTA	RADIUS	LENGTH	TANGENT
A	07°32'04"	405.00'	53.26'	26.67'
B	40°04'05"	405.00'	283.22'	147.68'
C	40°04'05"	405.00'	283.22'	147.68'
D	15°09'20"	395.00'	104.48'	52.55'
E	01°42'05"	395.00'	11.73'	5.87'
F	04°44'37"	395.00'	32.70'	16.36'
G	02°08'18"	405.00'	15.11'	7.56'
H	04°46'10"	405.00'	33.71'	16.87'
I	00°37'37"	405.00'	4.43'	2.22'

*AS-BUILT PER PLANS 1-12-06 JH

SANTA FE ENERGY CO.
REVIEWED & APPROVED BY DATE

GENERAL TELEPHONE COMPANY
REVIEWED & APPROVED BY: 11-27-85 DATE

SOUTHERN CALIF. GAS CO.
REVIEWED & APPROVED BY 10-25-85 DATE

SOUTHERN PACIFIC PIPELINES CO.
REVIEWED & APPROVED BY DATE

RIV. CO: B.M.
BRASS DISC MARKED M-64-69 IN THE CENTER OF A 8" x 16' HDWL @ THE S.W. CORNER OF HWY. 60 & DAY ST. 53" WEST OF DAY ST. & 23' S.E. OF N.E. CORNER OF A C.S.D.H. R/W FENCE. ELEVATION = 1612.241

EASTERN MUNICIPAL WATER DISTRICT
REVIEWED BY: 11/27/85 DATE

Greiner
Greiner Engineering of California
5225 Canyon Crest Drive
Bldg. 200, Suite 253
Riverside, California 92507
(714) 351-8328
(714) 788-7746
A Greiner Engineering, Inc. Company

PLANS PREPARED UNDER THE DIRECTION OF: R.C.E. NO. 30534 DATE 2/25/85

MARK	REVISIONS	APPR.	DATE
4	ADDED DRIVEWAY ENTRANCES		
3	MODIFIED SEWER LATERAL LOCATION		
2	REVISED SEWER GRADE & ELEVATIONS		
1	ADDED SD. PAC. PIPELINES NOTIFICATION		

DESIGNED BY W.E.D. DRAWN BY W.F.H. CHECKED BY H.A.F.

CITY OF RIVERSIDE, CALIFORNIA
PUBLIC WORKS DEPARTMENT

APPROVED BY	BY	DATE
PRINCIPAL ENGINEER		12/3/85
PARK DEPARTMENT		
TRAFFIC DIVISION		
CHIEF PUB. WKS. ENGR.		

APPROVED BY William D. Gardner
DIRECTOR OF PUBLIC WORKS
DATE 2-5-86

CANYON SPRINGS ASSESSMENT DISTRICT
PARCEL MAP NO. 19618
CONSTRUCTION PHASE II, STAGE I
RIVER CREST DRIVE
STA. 10+00.00 TO STA. 21+98.75

SCALE: HORIZ. 1"=40', VERT. 1"=4'

ACCOUNT NO.
DRAWING NUMBER S-1410
SHEET 2 OF 8

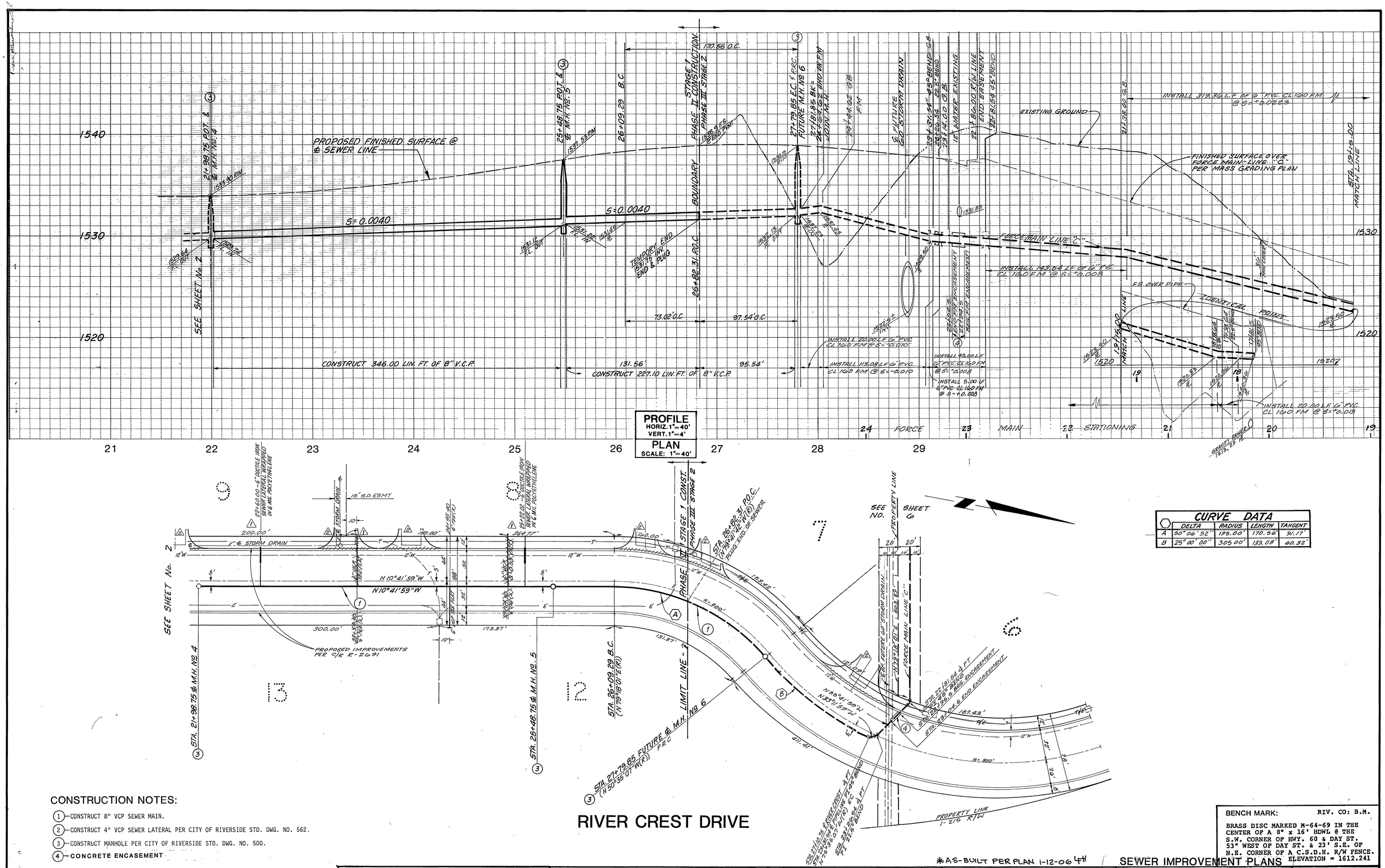

CURVE DATA				
	DELTA	RADIUS	LENGTH	TANGENT
A	50° 06' 52"	195.00'	170.56'	91.17'
B	25° 00' 00"	305.00'	133.08'	60.32'

CONSTRUCTION NOTES:

1. CONSTRUCT 8" VCP SEWER MAIN.
2. CONSTRUCT 4" VCP SEWER LATERAL PER CITY OF RIVERSIDE STD. DWG. NO. 562.
3. CONSTRUCT MANHOLE PER CITY OF RIVERSIDE STD. DWG. NO. 500.
4. CONCRETE ENCASEMENT

BENCH MARK: RIV. CO: B.M.

BRASS DISC MARKED M-64-69 IN THE CENTER OF A 8" x 16' HDWL @ THE S.W. CORNER OF HWY. 60 & DAY ST. 53" WEST OF DAY ST. & 23' S.E. OF N.E. CORNER OF A C.S.D.H. R/W FENCE. ELEVATION = 1612.241

*AS-BUILT PER PLAN 1-12-06 4H

SEWER IMPROVEMENT PLANS

EASTERN MUNICIPAL WATER DISTRICT

Joe Van Sickle 11/27/85

REVIEWED BY: DATE

Greiner

Greiner Engineering of California
5225 Canyon Crest Drive
Bldg. 200, Suite 253
Riverside, California 92507
(714) 351-8328
(714) 788-7746
A Greiner Engineering, Inc. Company

PLANS PREPARED UNDER THE DIRECTION OF: Brian L. Jensen R.C.E. NO. 30534 DATE 2/25/85

MARK	REVISIONS	APPR.	DATE
2	ADDED DRIVEWAY ENTRANCES		
1	MODIFIED SEWER LATERAL MATERIAL & LOCATION		

DESIGNED BY W.E.D. DRAWN BY G.H. CHECKED BY B.L.J.

CITY OF RIVERSIDE, CALIFORNIA
PUBLIC WORKS DEPARTMENT

APPROVED BY	BY	DATE
PRINCIPAL ENGINEER	[illegible]	1/27/86
PARK DEPARTMENT		
TRAFFIC DIVISION		
CHIEF PUB. WKS. ENGR.	[illegible]	1/28/86

APPROVED BY William D. Gardner
DIRECTOR OF PUBLIC WORKS
DATE 2-5-86

CANYON SPRINGS ASSESSMENT DISTRICT
PARCEL MAP NO. 19618
CONSTRUCTION PHASE II, STAGE I
RIVER CREST DRIVE
STA. 21+98.75 TO STA. 26+82.31

SCALE: HORIZ. 1"=40', VERT. 1"=4'

ACCOUNT NO.
DRAWING NUMBER S - 1410
SHEET 3 OF 8
J.N. 6651504

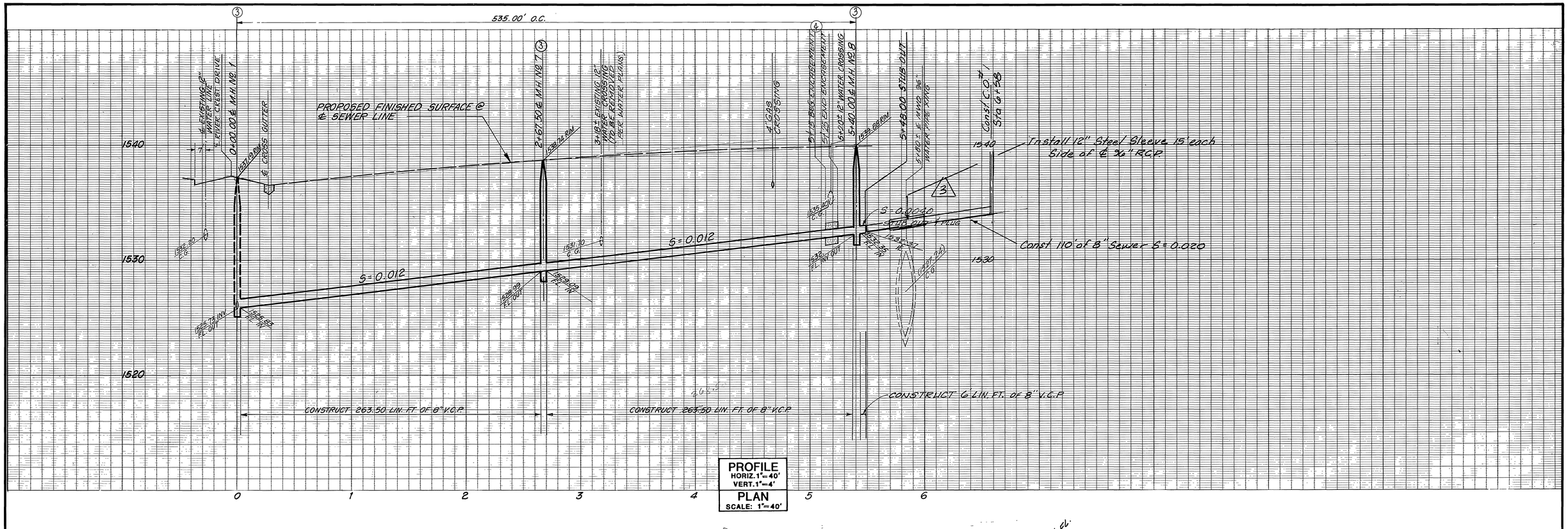

PROFILE
HORIZ. 1"=40'
VERT. 1"=4'
PLAN
SCALE: 1"=40'

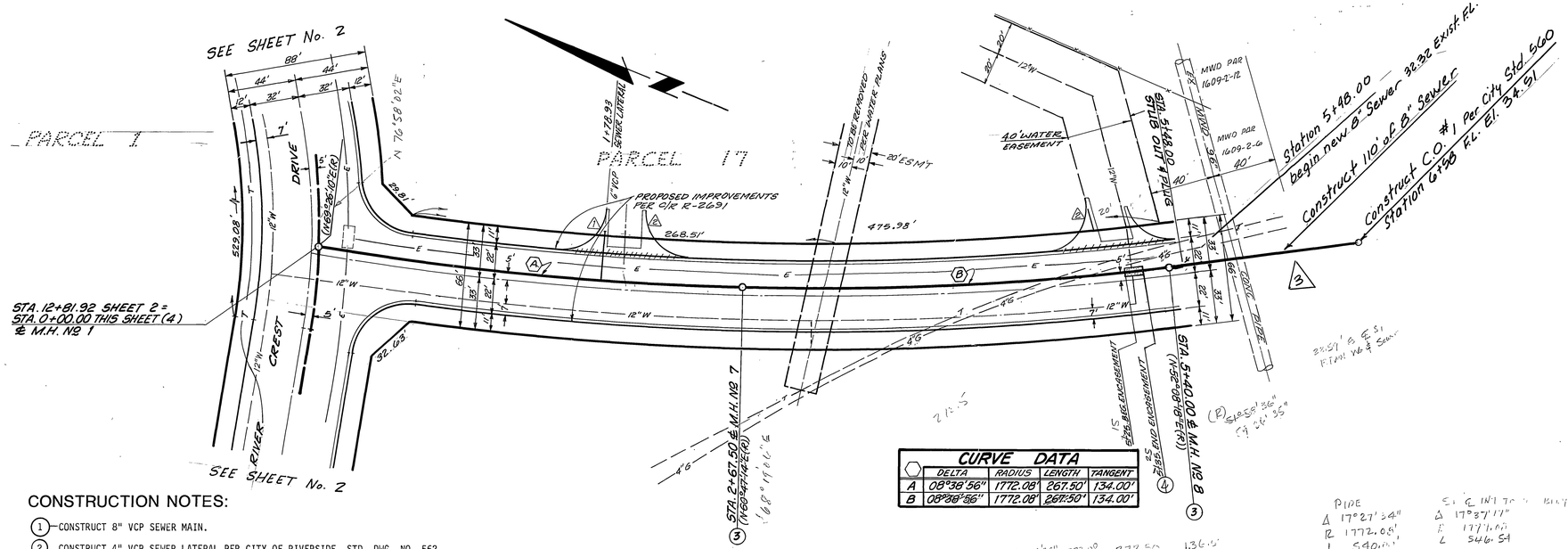

CURVE DATA				
	DELTA	RADIUS	LENGTH	TANGENT
A	08°38'56"	1772.08'	267.50'	134.00'
B	08°38'56"	1772.08'	267.50'	134.00'

CONSTRUCTION NOTES:

1. CONSTRUCT 8" VCP SEWER MAIN.
2. CONSTRUCT 4" VCP SEWER LATERAL PER CITY OF RIVERSIDE. STD. DWG. NO. 562.
3. CONSTRUCT MANHOLE PER CITY OF RIVERSIDE STD. DWG. NO. 500.
4. CONCRETE ENCASEMENT

FISCHER ROAD

Revisions Noted by 3 were prepared under the direction of William H. Addington RCE 26008 12055 Westwood Lane, Grand Terrace Ca. Tel. 909-825-6692

REGISTERED PROFESSIONAL ENGINEER WILLIAM H. ADDINGTON NO. 26008 Exp. 3-31-06 CIVIL STATE OF CALIFORNIA

4/19/05

BENCH MARK: RIV. CO: B.M.
BRASS DISC MARKED M-64-69 IN THE CENTER OF A 8" x 16' HDWL @ THE S.W. CORNER OF HWY. 60 & DAY ST. 53" WEST OF DAY ST. & 23' S.E. OF N.E. CORNER OF A C.S.D.H. R/W FENCE. ELEVATION = 1612.241

*AS-BUILT PER PLANS 1-12-06 4H

SEWER IMPROVEMENT PLANS

SOUTHERN CALIFORNIA GAS
E. P. Rucker 10-25-85
REVIEWED & APPROVED BY DATE

EASTERN MUNICIPAL WATER DISTRICT
Joe Van Sickle 11/27/85
REVIEWED BY: DATE

Greiner
Greiner Engineering of California
5225 Canyon Crest Drive
Bldg. 200, Suite 253
Riverside, California 92507
(714) 351-8328
(714) 788-7746
A Greiner Engineering, Inc. Company

PLANS PREPARED UNDER THE DIRECTION OF: Brian D. Jensen R.C.E. NO. 30534 DATE 9/25/85

MARK	REVISIONS	APPR.	DATE
3	Const 110' of 8" Sewer extention and Const. Cleanout	RVZ	4-20-05
2	ADDED DRIVEWAY ENTRANCES		
1	MODIFIED SEWER LATERAL LOCATION		

DESIGNED BY H.A. DRAWN BY G.W. CHECKED BY WED

CITY OF RIVERSIDE, CALIFORNIA
PUBLIC WORKS DEPARTMENT

APPROVED BY	BY	DATE
PRINCIPAL ENGINEER		1/23/86
PARK DEPARTMENT		
TRAFFIC DIVISION		
CHIEF PUB WKS. ENGR.		1/23/86

APPROVED BY William D. Gardner
DIRECTOR OF PUBLIC WORKS
DATE 2-5-86

CANYON SPRING ASSESSMENT DISTRICT
PARCEL MAP NO. 19618
CONSTRUCTION PHASE II, STAGE I
FISCHER ROAD
STA. 0+00.00 TO STA. 5+48.00

ACCOUNT NO.
DRAWING NUMBER S - 1410
SHEET 4 OF 8
SCALE: HORIZ. 1"=40', VERT. 1"=4'

INDEXED

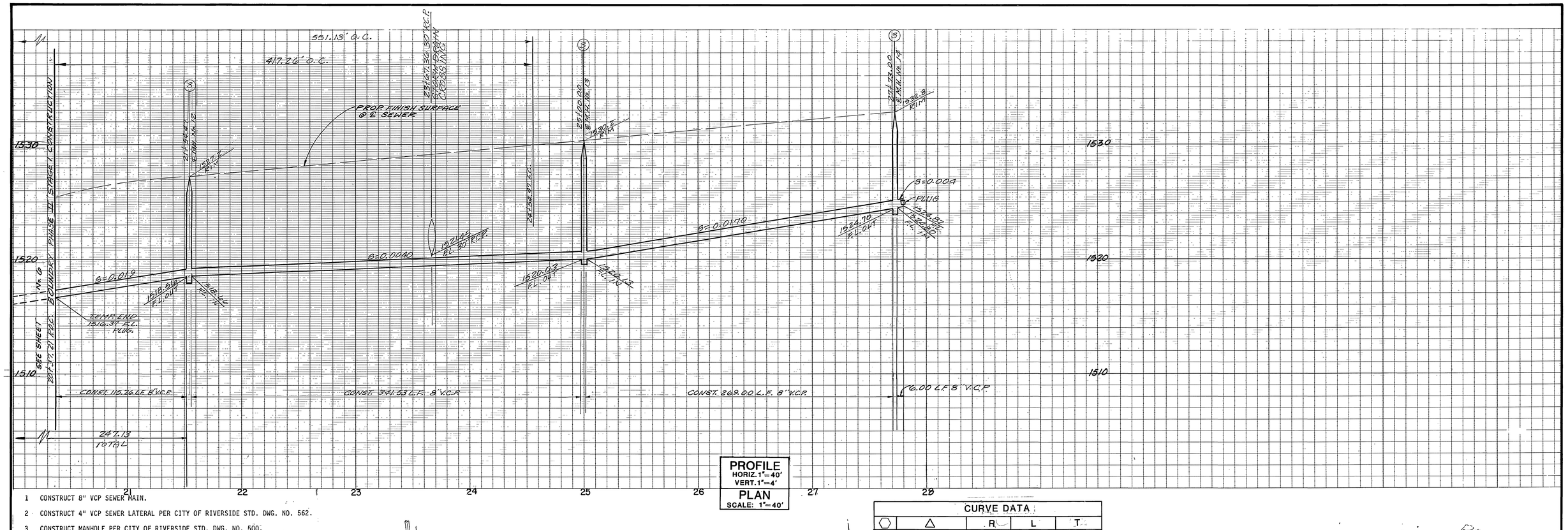

PROFILE
HORIZ. 1"=40'
VERT. 1"=4'

PLAN
SCALE: 1"=40'

1 CONSTRUCT 8" VCP SEWER MAIN.

2 CONSTRUCT 4" VCP SEWER LATERAL PER CITY OF RIVERSIDE STD. DWG. NO. 562.

3 CONSTRUCT MANHOLE PER CITY OF RIVERSIDE STD. DWG. NO. 500.

CURVE DATA				
	Δ	R	L	T
A	11° 24' 29"	1261.28'	251.13'	125.98'
B	13° 37' 41"	1261.28'	300.00'	150.71
C	5° 13' 36"	1261.28'	117.26'	58.67'

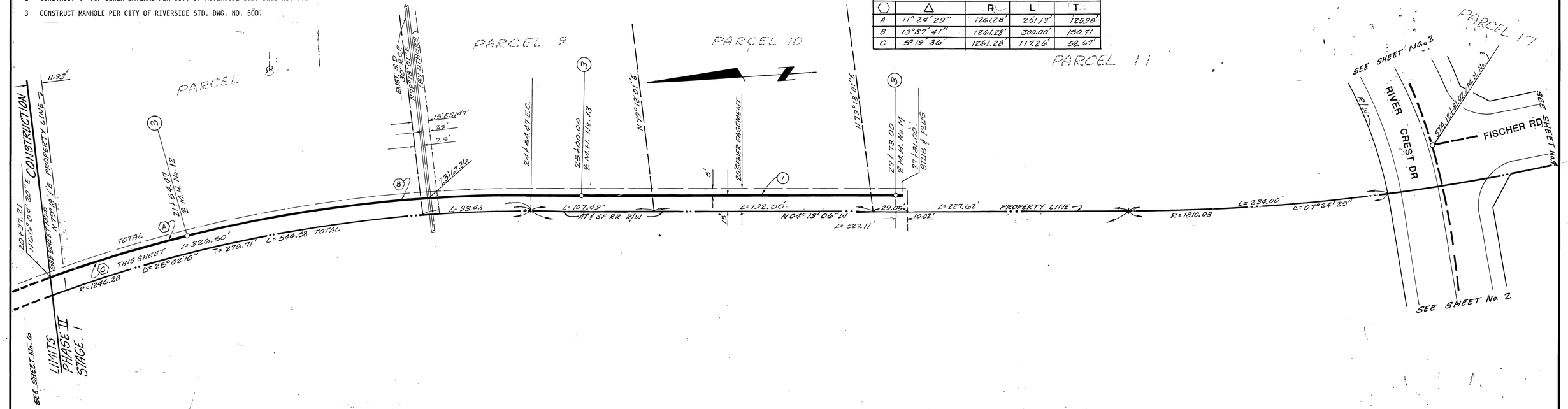

BENCHMARK: RIV. CO: B.M.

BRASS DISC MARKED M-64-69 IN THE CENTER OF A 8" x 16' HDWL @ THE S.W. CORNER OF HWY. 60 & DAY ST. 53" WEST OF DAY ST. & 23' S.E. OF N.E. CORNER OF A C.S.D.H. R/W FENCE. ELEVATION = 1612.241

EASTERN MUNICIPAL WATER DISTRICT

Joe Van Sickle 11/27/85
REVIEWED BY: DATE

Greiner
An International Professional Services Organization
5225 Canyon Crest Drive
Bldg. 200 Suite 253
Riverside, California 92507
714 351-8328
Engineering, Surveying, Planning, Architecture, Construction Management

PLANS PREPARED UNDER THE DIRECTION OF: Brian L. Jensen R.C.E. NO. 30534 DATE 9/26/85

MARK	REVISIONS	APPR.	DATE

DESIGNED BY WED DRAWN BY G.H. CHECKED BY H.A.

*AS-BUILT PER PLANS 1-12-06 4th

CITY OF RIVERSIDE, CALIFORNIA
PUBLIC WORKS DEPARTMENT

APPROVED BY	BY	DATE
PRINCIPAL ENGINEER		
PARK DEPARTMENT		
TRAFFIC DIVISION		
CHIEF PUB. WKS. ENGR.		

APPROVED BY William D. Gardner
DIRECTOR OF PUBLIC WORKS
DATE 2-5-86

SEWER IMPROVEMENT PLANS

CANYON SPRINGS ASSESSMENT DISTRICT
PARCEL MAP NO. 19618
CONSTRUCTION PHASE II, STAGE I
EASEMENT IN BACK OF PARCELS 8-10
STA. 20+37.21 TO STA. 27+81.00

SCALE: HORIZ. 1"=40', VERT. 1"=4'

ACCOUNT NO.

DRAWING NUMBER S - 1410

SHEET 5 OF 8

J.N. 6651504

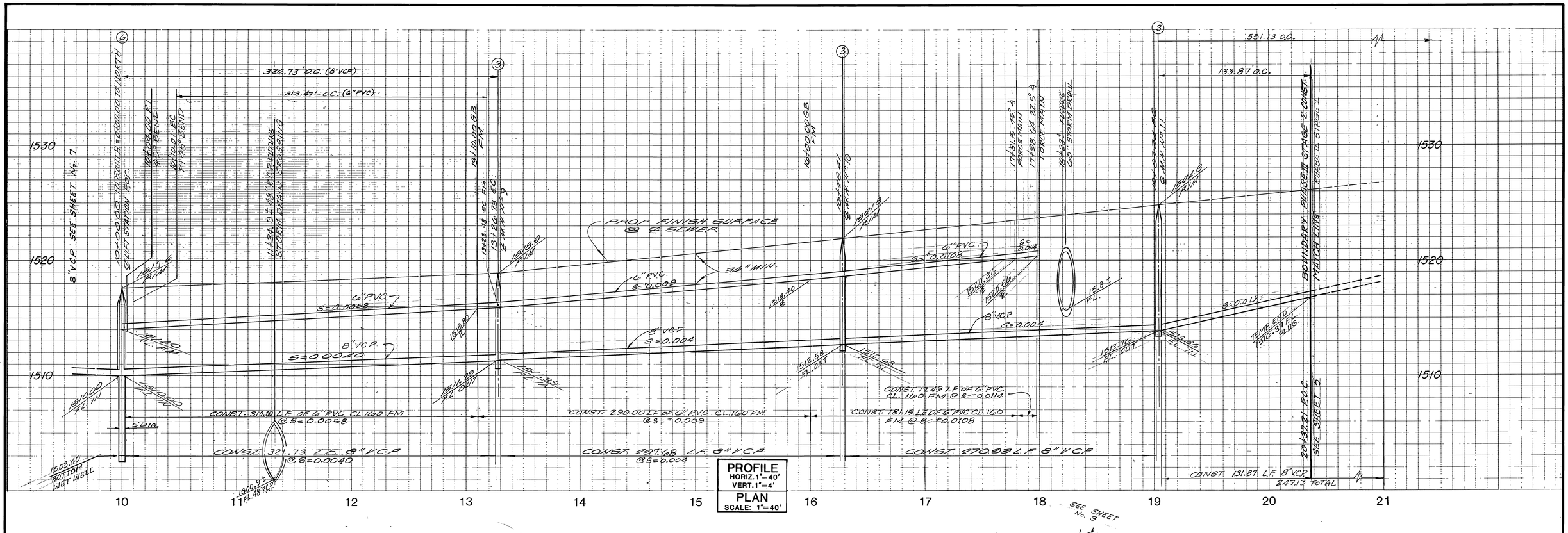

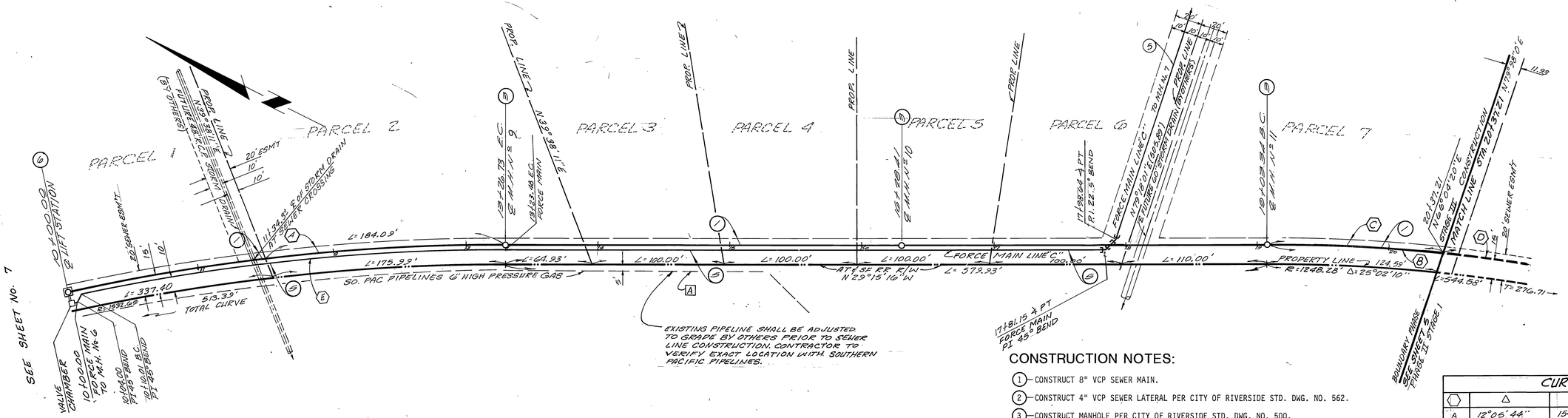

CONSTRUCTION NOTES:

1. CONSTRUCT 8" VCP SEWER MAIN.
2. CONSTRUCT 4" VCP SEWER LATERAL PER CITY OF RIVERSIDE STD. DWG. NO. 562.
3. CONSTRUCT MANHOLE PER CITY OF RIVERSIDE STD. DWG. NO. 500.
5. CONSTRUCT 6" PVC CL. 160 FORCE MAIN.
6. CONSTRUCT LIFT STATION PER DETAIL ON SHT. 8

CURVE DATA				
⬡	Δ	R	L	T
A	12°05'44"	1547.69'	326.73'	163.97'
B	11°24'29"	1261.28'	251.13'	125.98'
C	6°04'53"	1261.28'	133.87'	67.00'
D	5°19'36"	1261.28'	117.26'	58.67'
E	11°38'32"	1542.69'	313.47'	157.28'

VERIFICATION OF LOCATION ONLY
AS OF DATE:
SO. PACIFIC PIPELINE DATE:
SANTA FE ENERGY CO DATE

BENCHMARK: RIV. CO: B.M.
BRASS DISC MARKED M-64-69 IN THE CENTER OF A 8" x 16' HDWL @ THE S.W. CORNER OF HWY. 60 & DAY ST. 53" WEST OF DAY ST. & 23' S.E. OF N.E. CORNER OF A C.S.D.H. R/W FENCE. ELEVATION = 1612.241

EASTERN MUNICIPAL WATER DISTRICT
Joe Van Sickle 11/27/85
REVIEWED BY: DATE

Greiner
Greiner Engineering of California
5225 Canyon Crest Drive
Bldg. 200, Suite 253
Riverside, California 92507
(714) 351-8328
(714) 788-7746
A Greiner Engineering, Inc. Company

PLANS PREPARED UNDER THE DIRECTION OF: Bruce L. Jensen R.C.E. NO. 30534 DATE 9/25/85

MARK	REVISIONS	APPR.	DATE

DESIGNED BY HA DRAWN BY G.H. CHECKED BY WED
FRED

*AS-BUILT PER PLANS 1-12-06 4H

CITY OF RIVERSIDE, CALIFORNIA
PUBLIC WORKS DEPARTMENT

APPROVED BY	BY	DATE
PRINCIPAL ENGINEER	JAE	1/23/86
PARK DEPARTMENT		
TRAFFIC DIVISION		
CHIEF PUB WKS. ENGR.		

APPROVED BY William D. Gardner
DIRECTOR OF PUBLIC WORKS
DATE 2-5-86

SEWER IMPROVEMENT PLANS
INDEXED
CANYON SPRINGS ASSESSMENT DISTRICT
PARCEL MAP NO. 19618
CONSTRUCTION PHASE III, STAGE 2
EASEMENT IN BACK OF PARCELS 1-7
STA. 10+00.00 TO STA. 20+37.27
SCALE: HORIZ. 1"=40', VERT. 1"=4'

ACCOUNT NO.
DRAWING NUMBER S - 1410
SHEET 6 OF 8
J.N. 6651504

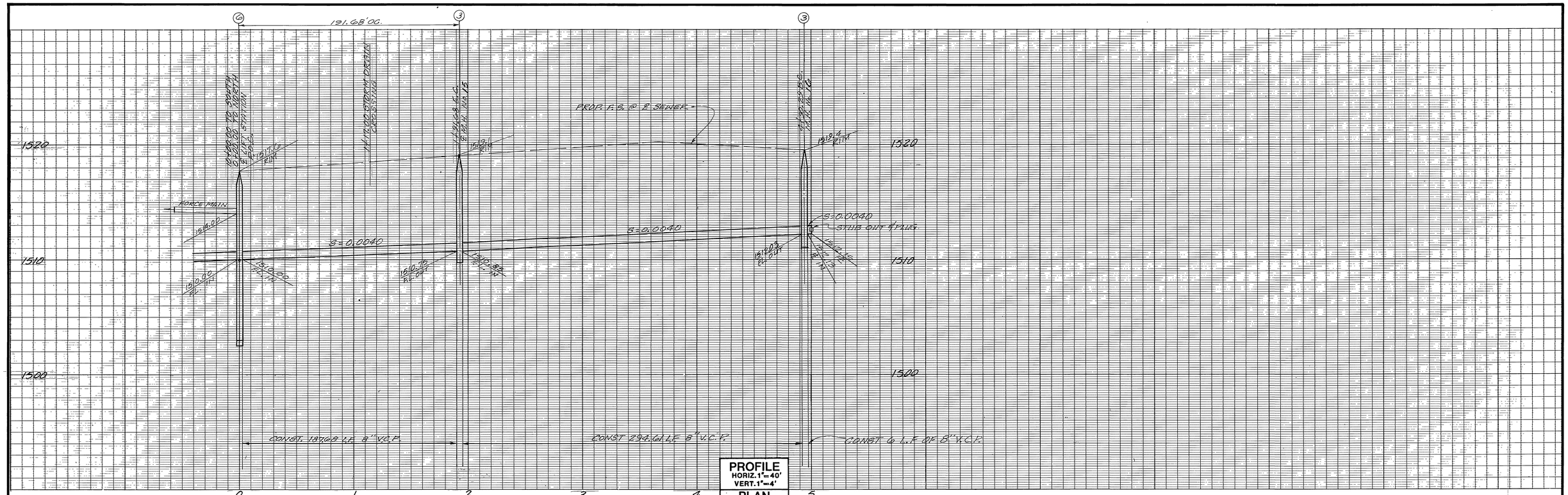

PROFILE
HORIZ. 1"=40'
VERT. 1"=4'

PLAN
SCALE: 1"=40'

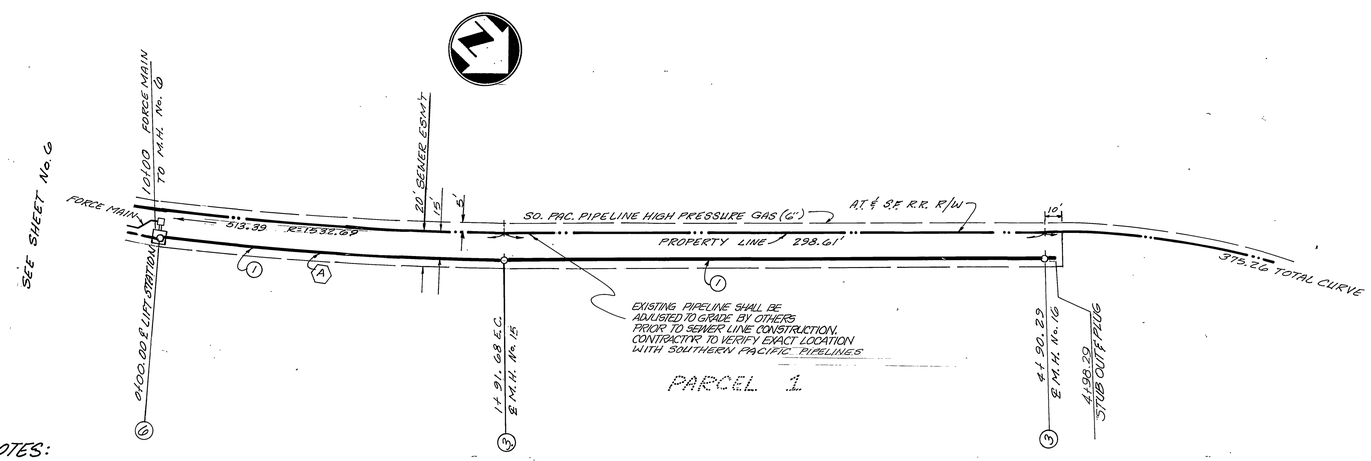

CONSTRUCTION NOTES:

1. CONSTRUCT 8" V.C.P. SEWER MAIN.
2. CONSTRUCT 4" V.C.P. SEWER LATERAL PER CITY OF RIVERSIDE STD. DWG. No. 562.
3. CONSTRUCT MANHOLE PER CITY OF RIVERSIDE STD. DWG. NO. 500
6. CONSTRUCT LIFT STATION PER DETAIL ON SHT 8

PIPE LINE CURVE DATA				
◯	Δ	R	L	T
A	7° 05' 46"	1547.69'	191.68'	95.96'

*AS-BUILT PER PLANS 1-12-06

SEWER IMPROVEMENT PLANS

INDEXED

VERIFICATION OF LOCATION ONLY
AS OF DATE: _____
SO. PACIFIC PIPELINE DATE
SANTA FE ENERGY CO. DATE

BENCH MARK: RIV. CO: B.M.
BRASS DISC MARKED M-64-69 IN THE CENTER OF A 8" x 16' HDWL @ THE S.W. CORNER OF HWY. 60 & DAY ST. 53" WEST OF DAY ST. & 23' S.E. OF N.E. CORNER OF A C.S.D.H. R/W FENCE. ELEVATION = 1612.241

Greiner
Greiner Engineering of California
5225 Canyon Crest Drive
Bldg. 200, Suite 253
Riverside, California 92507
(714) 351-8328
(714) 788-7746
A Greiner Engineering, Inc. Company

PLANS PREPARED UNDER THE DIRECTION OF: Brian L. Jensen R.C.E. NO. 30534 DATE 9/25/85

MARK	REVISIONS	APPR.	DATE

DESIGNED BY WED DRAWN BY G.H. CHECKED BY H.A.

CITY OF RIVERSIDE, CALIFORNIA
PUBLIC WORKS DEPARTMENT

APPROVED BY	BY	DATE
PRINCIPAL ENGINEER	[illegible]	1/23
PARK DEPARTMENT		
TRAFFIC DIVISION		
CHIEF PUB. WKS. ENGR.	[illegible]	1/23/86

APPROVED BY William D. Gardner
DIRECTOR OF PUBLIC WORKS
DATE 2-5-86

CANYON SPRINGS ASSESSMENT DISTRICT
PARCEL MAP NO. 19618
CONSTRUCTION PHASE III, STAGE 2
EASEMENT IN BACK OF PARCEL 1
STA. 0+00.00 TO STA. 4+98.29

SCALE: HORIZ. 1"=40', VERT. 1"=4'

ACCOUNT NO.
DRAWING NUMBER S - 1410
SHEET 7 OF 8

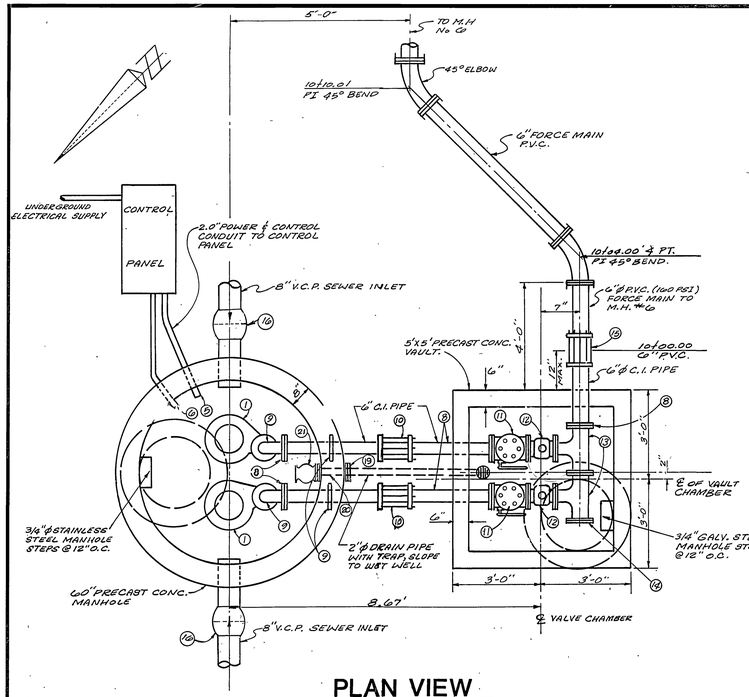

PLAN VIEW

NOT TO SCALE

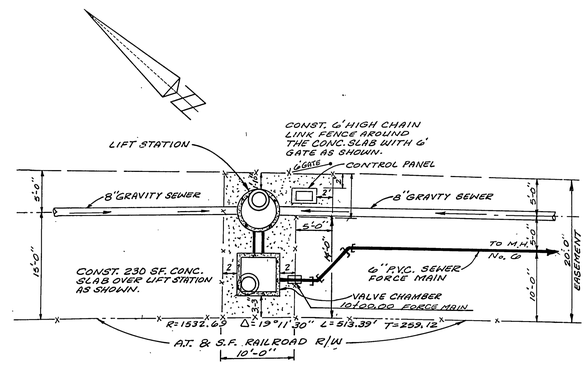

SITE PLAN

SCALE 1" = 10'

ESSCO TORQUE FLUID SUBMERSIBLE PUMPS OR EQUAL			
PUMP DESIGN CHARACTERISTICS			
250 GPM,	37' TDH,	7½ HP,	1155 RPM

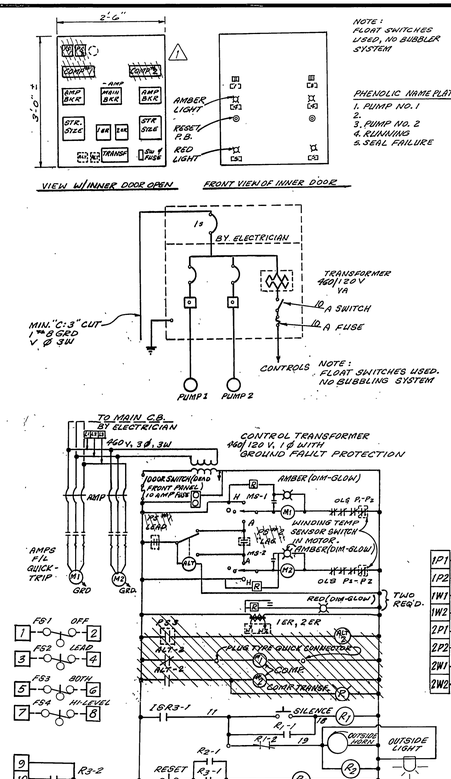

SCHEMATIC DIAGRAM
PUMP CONTROL SYSTEM

NOT TO SCALE

GENERAL NOTES

LIFT STATION, PHASE III, WEST FORTY (M-R002)

1. CONTRACTOR SHALL VERIFY ALL DIMENSIONS AND GENERAL ARRANGEMENT OF EQUIPMENT SHOWN.
2. CONTRACTOR SHALL INSTALL A DUPLEX, SUBMERSIBLE, AUTOMATIC SEWAGE LIFT STATION AS SHOWN. THE STATION SHALL BE COMPLETED WITH ALL NECESSARY ITEMS INCLUDING PUMP, CONTROL PANEL AND ALL ELECTRICAL WORKS.
3. CONTRACTOR SHALL VERIFY ELECTRICAL SERVICE REQUIREMENTS & SERVICE LOCATION WITH THE CITY OF RIVERSIDE PRIOR TO SUBMITTING BID.
4. ELECTRICAL INSTALLATION SHALL CONFORM TO ALL APPLICABLE REQUIREMENTS OF THE CITY OF RIVERSIDE, THE LATEST EDITION OF THE NATIONAL ELECTRICAL CODE AND THE STATE OF CALIFORNIA LOW VOLTAGE ELECTRICAL SAFETY ORDERS, TITLE 8.
5. ALL ELECTRICAL CONDUITS AND FITTINGS IN CONTACT WITH EARTH SHALL BE RIGID PVC. SCHEDULE 40 WITH 24" MINIMUM COVER
6. ALL EXPOSED ELECTRICAL CONDUITS AND FITTINGS SHALL BE RIGID GALVANIZED STEEL, EXCEPT FLEXIBLE CONDUIT SHALL BE LIQUID TIGHT.
7. ALL CONDUITS FROM WET WELL TO CONTROL PANEL SHALL BE SEALED.
8. AFTER INSTALLATION, THE LB'S AND CONNECTORS SHALL BE SEALED WATERTIGHT AND GASTIGHT USING A BITUMASTIC PAINT.
9. PUMPS, VALVES, CAST IRON PIPING, BOLTS, NUTS, AND ALL FITTINGS SHALL BE PAINTED WITH TWO 8 MIL. COATS OF KOPPERS 300M BITUMASTIC EPOXY.
10. CAST-IN-PLACE CONCRETE SHALL BE PORTLAND CEMENT CONCRETE AND SHALL DEVELOP A MINIMUM COMPRESSIVE STRENGTH OF 3000 PSI IN 28 DAYS.
11. PUMPS SHALL BE POSITIONED SO THAT HOSES ARE PLUMB. CUT HOSES TO PROPER LENGTH, INSTALL TAUT. USE STAINLESS STEEL CLAMPS.
12. MOTOR CONTROL CABLES TO BE STRAPPED TO POWER CABLE EVERY 12" USING PANDUIT #SST25-CP CABLE TIES. EXCESS MOTOR LEADS TO BE CUT AS REQUIRED, LEAVING 12" SLACK.
13. FLOOR OF WET WELL TO BE SMOOTH AND LEVEL.
14. EXACT SIZE OR REINFORCED CONCRETE FOOTING, FOR THE CONTROL PANEL SHALL BE DETERMINED BY SIZE OF CONTROL PANEL SUPPLIED BY THE PUMP MANUFACTURER.
15. CHECK VALVES, GATE VALVE AND TEES IN THE VALVE CHAMBER SHALL BE SUPPORTED WITH CONCRETE BRICKS.
16. ALL CAST IRON PIPE AND FITTINGS SHALL BE CEMENT MORTAR LINED
17. ALL CAST IRON PIPE FITTINGS AND VALVES SHALL BE FIELD COATED WITH 16 MIL OF COAL TAR EPOXY PER NOTE 9 HEREON.
18. PUMP #1 AND PUMP #2 SHALL BE PAINTED ON THE DISCHARGE PIPING OF EACH PUMP AT A POINT CLEARLY VISIBLE FROM GRADE, USING PAINT OF A CONTRASTING COLOR.
19. REQUIRED SUPERVISION FOR INSTALLING, TESTING, AND STARTING SHALL BE FURNISHED BY FACTORY TRAINED PERSONNEL AT NO CHANGE. VENDOR SHALL PROVIDE A LIST OF FIVE EQUIVALENT INSTALLATIONS SUCCESSFULLY OPERATING FOR A MINIMUM PERIOD OF 2 YEARS.
20. TO RECEIVE CONSIDERATION OF ANY ALTERNATE. FULL DESCRIPTIVE MATERIAL MUST BE SUBMITTED TO ENGINEER 10 DAYS PRIOR TO BID DATE.

MATERIAL SCHEDULE

LIFT STATION NOTES, PHASE III, WEST FORTY (M-R002)

NO.	ITEM
1	ESSCO MODEL 4 x 12-TP SIZE 6" "NON-CLOG VORTEX TORQUE FLUID HEAVY DUTY RAW SEWAGE PUMP FOR 250 GPM AT 37' TDH COUPLED TO U.L. TEXP. CLASS I, GROUP D. RELIANCE SUBMERSIBLE MOTOR. 7½ HP 1155 RPM WITH 30 FT. OF 8-WIRE CABLE, TWO SEPARATE SEALS, OIL LUBRICATION, 30-DAY WARNING SYSTEM, N/C THERMAL PROTECTION WITH ESSCO OIL AGIVENT APPARATUS. PATENT 4,134,711 (OR EQUAL).
2	POWER CABLE ASSEMBLY FURNISHED WITH PUMP 30' CABLE 4/C (3 TERMINAL, 1 GROUND), 30' CABLE 4/C (2 PROTECTION WIRES, 2 WARNING WIRES). (VERIFY WITH MFR.).
3	SIZE 1/4" x 5/16" STAINLESS STEEL NYLON COVERED LIFTING CABLES WITH 1/2" X 6" CAD. PLATED EYEBOLT AND HOOK.
4	SIZE 6" 100 PSI DISCHARGE HOSE COMPLETE WITH CADMIUM PLATED STEEL NIPPLES. STAINLESS STEEL BANDS AND 125# F.P. CAST IRON MATING FLANGES.
5	EXPLOSION-PROOF 1½ LB COMPLETE WITH FOUR WATERTIGHT CONNECTORS FOR MOTOR CONTROL LEADS. AFTER INSTALLATION THE LB AND CONNECTORS SHALL BE SEALED WATERTIGHT AND GASTIGHT, USING A BITUMASTIC PAINT. THE CONTRACTOR SHALL BE RESPONSIBLE FOR PROVIDING THIS SEAL AND WATERTIGHT CONDUITS.
6	EXPLOSION-PROOF 2½ LB WITH SEAL, CLASS 1, DIV. 1, PROVIDE WATERTIGHT CONNECTIONS FOR CABLE ENTRY INTO LB. DO NOT SLICE IN LB. (MINIMUM OF 3 WATERTIGHT CONNECTIONS FOR CABLES INTO LB) PROVIDE ONE SPARE PLUGGED ENTRY.
7	SIZE 4" x 6" CAST IRON FLANGED INCREASING 90° ELBOW.
8	SIZE 6" CAST IRON PIPE FLANGED x PE.
9	SIZE 6" CAST IRON WALL FLANGED ASSEMBLY, BOLT ON TYPE.
10	SIZE 6" CAST IRON COUPLING, SMITH-BLAIR NO. 431.
11	SIZE 6" 125# F.F. FLANGED I.B.B.M. SWING CHECK VALVE WITH OUTSIDE (LEVER AND SPRING), BRONZE MOUNTED.
12	SIZE 6" 125# F.F. FLANGED I.B.B.M. NON-RISING STEM GATE VALVE.
13	SIZE 6" x 6" CAST IRON FLANGED TEE.
14	SIZE 6" CAST IRON BLIND FLANGED.
15	SIZE 6" TRANSITION CAST COUPLING, SMITH-BLAIR NO. 433.
16	SIZE 8" FLEXIBLE COUPLING, MISSION CLAY PIPE, BOOT WITH S.S. CLAMPS.
17	FLOAT SWITCH SHALL BE ROTO-TYPE S SUSPENDED FORM 2700-A OR EQUAL WITH SEALED MERCURY SWITCH.
18	SIZE 2" FLANGED CHECK VALVE
19	SIZE 2" SCREW-ON FLANGED
20	SIZE 2" SPOOL WITH WATER STOP
21	SIZE 2" 125# F.F. FLANGED I.B.B.M. SWING CHECK VALVE WITH OUTSIDE (LEVER AND SPRING), BRONZE MOUNTED.

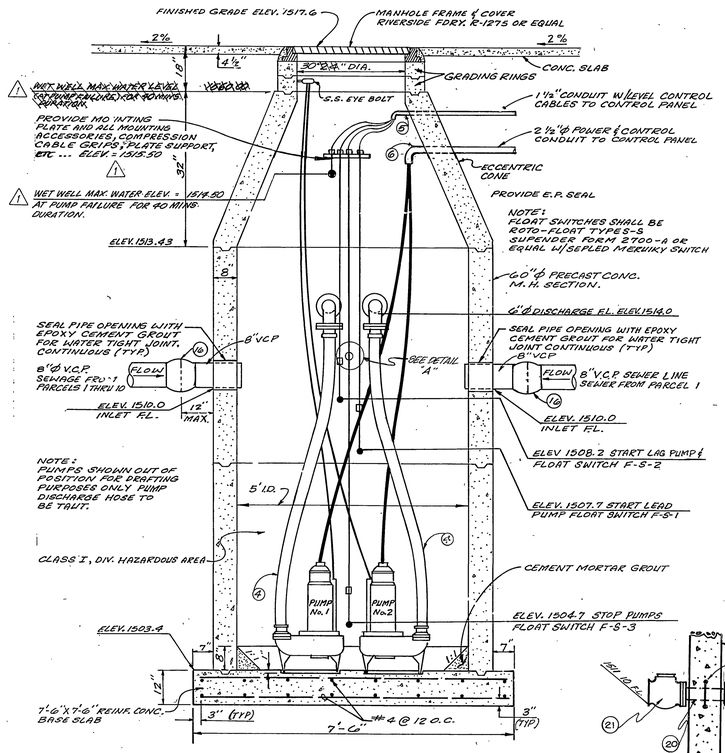

SECTION
LIFT STATION WET WELL

NOT TO SCALE

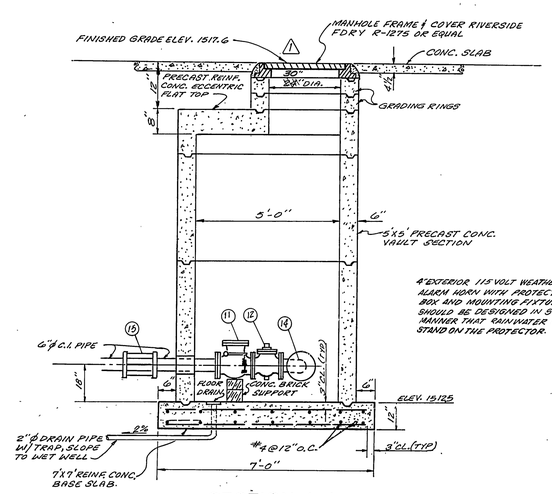

SECTION A-A
VALVE CHAMBER

NOT TO SCALE

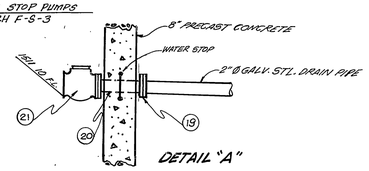

4" EXTERIOR 115 VOLT WEATHER PROOF ALARM HORN WITH PROTECTOR, CONDUIT BOX AND MOUNTING FIXTURES. THEY SHOULD BE DESIGNED IN SUCH A MANNER THAT RAINWATER CAN NOT STAND ON THE PROTECTOR.

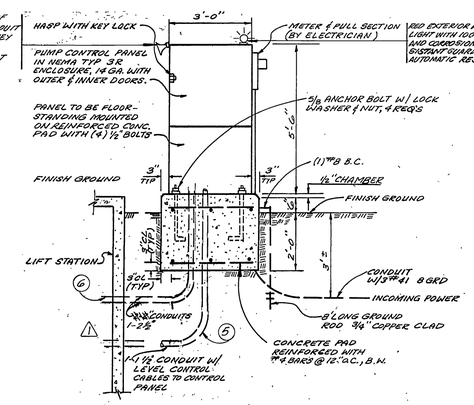

ESSCO PUMP CONTROL PANEL DETAIL

NOT TO SCALE * AS-BUILT PER PLANS 1-12-06

BENCH MARK: RIV. CO: B.M.

BRASS DISC MARKED M-64-69 IN THE CENTER OF A 8" x 16' HDWL @ THE S.W. CORNER OF HWY. 60 & DAY ST. 53" WEST OF DAY ST. & 23' S.E. OF N.E. CORNER OF A C.S.D.H. R/W FENCE, ELEVATION = 1612.241

Greiner

Greiner Engineering of California
5225 Canyon Crest Drive
Bldg 200, Suite 253
Riverside, California 92507
(714) 351-8328
(714) 788-7746
A Greiner Engineering, Inc. Company

PLANS PREPARED UNDER THE DIRECTION OF: Brian L. Jensen R.C.E. NO. 30534 DATE 9/25/85

MARK	REVISIONS	APPR.	DATE
1	ALARM SYSTEM & MAX WATER SURFACE ADDED, MH CHANGED	JLV	5/7/86

DESIGNED BY HA DRAWN BY GH CHECKED BY JLV

CITY OF RIVERSIDE, CALIFORNIA
PUBLIC WORKS DEPARTMENT

APPROVED BY	JY	DATE
PRINCIPAL ENGINEER		
PARK DEPARTMENT		
TRAFFIC DIVISION		
CHIEF PUB WKS. ENGR		

APPROVED BY: William D. Sanders, DIRECTOR OF PUBLIC WORKS
DATE 2-5-86

CANYON SPRING ASSESSMENT DISTRICT

PARCEL MAP NO. 19618
CONSTRUCTION PHASE III, STAGE 2
SEWER LIFT STATION AND DETAILS

SEWER IMPROVEMENT PLANS

INDEXED

ACCOUNT NO.
DRAWING NUMBER S - 1410
SHEET 8 OF 8
SCALE: NOT TO SCALE
J.N. 6651504