RIVERSIDE CALIFORNIA

CITY OF RIVERSIDE — INCORPORATED 1883

PUBLIC WORKS DEPARTMENT

PHOENIX AVENUE TRUNK SEWER

CENTRAL AVE. to ARLINGTON AVE.

CONSTRUCTION LEGEND

CENTER LINE
RIGHT-OF-WAY LINE
SUBDIVISION LOT LINE
TOP OF SLOPE
TOE OF SLOPE
DIRECTION OF FLOW

CONSTRUCTION NOTES

NUMBERS ABOVE 100 IN A HEXAGON ON THE PLAN REFER TO THE RESPECTIVE STANDARD DRAWING AND SHALL BE CONSTRUCTED ACCORDINGLY, UNLESS MODIFICATIONS ARE NOTED ON THE PLAN OR COVER SHEET. ANY NUMBER SHOWN BELOW THE STANDARD DRAWING NUMBER INDICATES THE SPECIFIC ALTERNATE TO BE CONSTRUCTED.

500 M — ALL MANHOLES SHALL BE CONSTRUCTED PER STANDARD DRAWING No. 500 WITH THE EXCEPTION THE FRAME AND COVER OPENING SHALL BE 36" DIAMETER.

PAVEMENT REPLACEMENT SECTION IN PHOENIX AVENUE SHALL BE 6" FULL DEPTH A.C. OR 4" A.C. OVER 4" CRUSHED AGGREGATE BASE. PAVEMENT REPLACEMENT SECTION IN ARLINGTON AVENUE AND CENTRAL AVENUE SHALL BE 13" FULL DEPTH A.C. OR 8" A.C. OVER 14" CRUSHED AGGREGATE BASE. REPLACEMENT OF SURFACE IMPROVEMENTS SHALL BE IN ACCORDANCE WITH STD. DWG. No. 453.

GENERAL NOTES

1. EXISTING UTILITIES SHOWN ON THIS PLAN ARE PLOTTED FROM UTILITY RECORDS. THE CONTRACTOR IS REQUIRED TO TAKE DUE PRECAUTIONARY MEASURES TO LOCATE AND PROTECT ALL UTILITIES WHETHER OR NOT SHOWN ON THIS PLAN. IF THE COVER OF A UTILITY IS KNOWN, IT IS SHOWN INTHE PROFILE. UTILITIES IN THE PROFILE AS ---1/2"--O INDICATES THAT THE COVER IS UNKNOWN, BUT THE UTILITY IS NOT EXPECTED TO CONFLICT WITH THE PROPOSED IMPROVEMENTS.
2. ALL ELEVATIONS SHOWN ON THE PLANS SHALL BE STAKED IN THE FIELD.
3. PRIME CONTRACTORS BIDDING THIS WORK SHALL HAVE A CLASS "A", "C-34" OR "C-42" LICENSE.
4. EXISTING 48" RCP AT STA. 36+00 SHALL BE EXPOSED AND ELEVATION VERIFIED BY CITY SURVEYORS PRIOR TO THE ISSUANCE OF GRADE SHEETS.
5. LOCATION OF SEWER LATERALS AND WATER SERVICES SHOWN ON THE PLAN ARE APPROXIMATE. SEWER LATERALS AND WATER SERVICES SHALL BE LOCATED IN THE FIELD BY THE CONTRACTOR AT THE TIME OF CONSTRUCTION.
6. ULTIMATE DESIGN PEAK FLOW IN PHOENIX AVENUE =10.8 C.F.S PER CITY OF RIVERSIDE COMPUTER MODEL OF SEWER SYSTEM DATED APRIL 1988. (SEE ULTIMATE FLOW SCHEMATIC AT RIGHT)

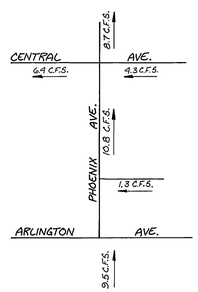

ULTIMATE FLOW SCHEMATIC
N.T.S.

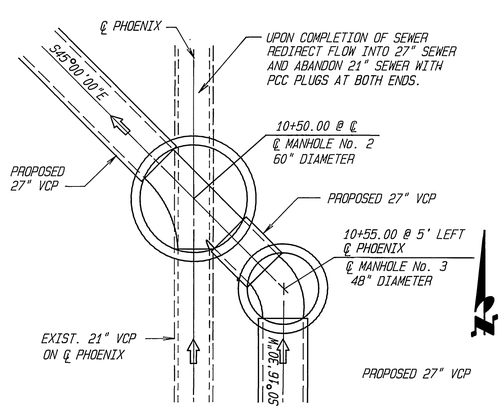

JUNCTION MANHOLE - STA. 10+50 — A
SCALE: 1" = 4'

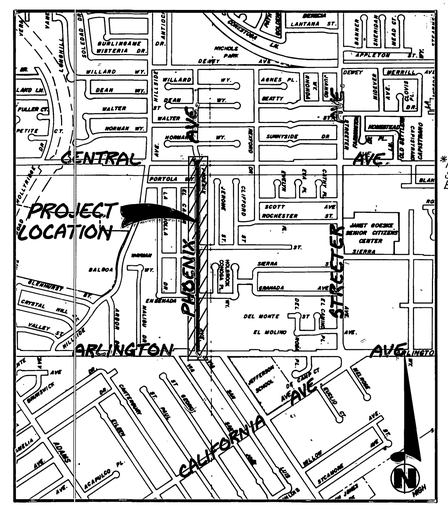

PROJECT LOCATION PLAN
0 KM. 0.5 KM. 1 KM. 1.5 KM.
0' 500' 1000' 2000' 3000' 4000' 5000' 6000'
SCALE 1" = 1000'

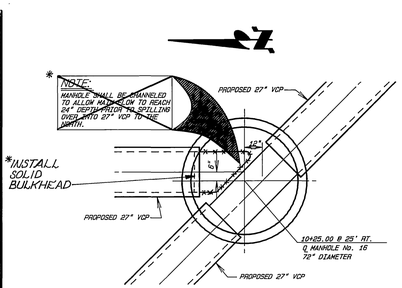

DETAIL — E/2
SCALE: 1" = 4'

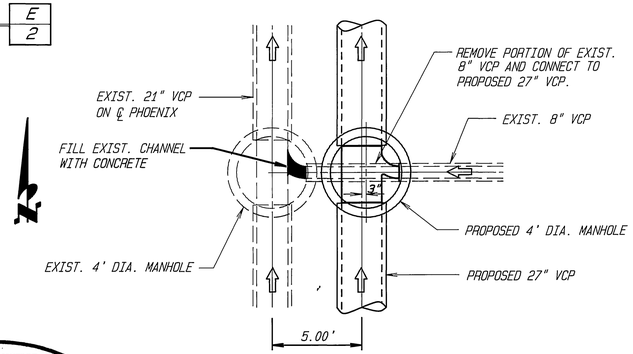

JUNCTION MANHOLE - TYPICAL — B
SCALE: 1" = 4'
STA. 21+77.90, 28+38.10, 29+81.10 & 31+58.30

EXISTING UNDERGROUND & TOPOGRAPHY LEGEND

EXISTING UNDERGROUND UTILITIES:

SANITARY SEWER — 8"S
WATER LINE — 6"W
STORM DRAIN — 24"S.D.
GAS LINE — 3"G
IRRIGATION LINE — 20" IRR.
ABANDONED UTILITY — 6"G (ABAN'D.)
TELEPHONE CONDUIT — T
ELECTRICAL CONDUIT — E
ELECTROLIER LIGHTING CONDUIT — ELC
TRAFFIC SIGNAL — SIG
FIRE ALARM — F

EXISTING TOPOGRAPHY:

BLOCK WALL
BOARD FENCE
WIRE FENCE
CHAIN LINK FENCE
TOP OF SLOPE
TOE OF SLOPE
DIRECTION OF FLOW

SANITARY SEWER M.H.
SANITARY SEWER CLEANOUT
STORM DRAIN M.H.
IRRIGATION WEIR
WATER M.H.
GAS M.H.
ELECTRIC M.H.
TELEPHONE M.H. OR VAULT
WATER METER
FIRE HYDRANT
SPRINKLER HEAD
VALVE
AIR VALVE
AIR VENT
POLE & GUY ANCHOR
ELECTRIC POLE
TELEPHONE POLE
JOINT USE POLE
PULL BOX
TRAFFIC SIGN
PARKING METER
FIRE ALARM BOX
STREET NAME SIGN
GAS METER
MAIL BOX
FAUCET
TELEPHONE RISER
WHEEL STOP
A.C. BERM
STEEL POST
WOOD POST
PEDESTRIAN PUSH BUTTON
RAILROAD TRACKS
RAILROAD SIGN
RAILROAD SIGNAL
STREET LIGHT & TRAFFIC SIGNAL ON MAST ARM
STREET LIGHT (UPRIGHT)
STREET LIGHT
TRAFFIC SIGNAL
TRAFFIC SIGNAL ON MAST ARM
TRAFFIC SIGNAL CONTROLLER
TRAFFIC SIGNAL PRESSURE DETECTOR
TRAFFIC SIGNAL LOOP DETECTOR
CONCRETE
ASPHALT
EDGE OF PAVEMENT
BUILDING
UNDERGROUND STRUCTURE
OVERHANGING STRUCTURE
CITRUS TREE
OR DECIDUOUS TREE
OR PALM TREE
OR SHRUBBERY
TREE STUMP
EVERGREEN TREE

IMPORTANT NOTICE
Section 4216/4217 of the Government Code requires a Dig Alert Identification Number be issued before a "Permit to Excavate" will be valid. For your Dig Alert I.D. Number Call Underground Service Alert
TOLL FREE 1-800-422-4133
Two working days before you dig

ENGINEER IN RESPONSIBLE CHARGE
Ronald C. Mueller
RONALD C. MUELLER
R.C.E. 29510 expires 3-31-91
DATE 2-1-88

REGISTERED PROFESSIONAL ENGINEER — RONALD C. MUELLER — NO. 29510 — Expires 3-31-91 — CIVIL — STATE OF CALIFORNIA

CITY OF RIVERSIDE
PUBLIC WORKS DEPARTMENT

	BY	DATE
APPROVED BY		
PRINCIPAL ENGINEER		2-17-89
SURVEYOR		1/18/89
TRAFFIC DIVISION		1-23-89
CHIEF P.W. INSPECTOR		1/20/89
DEPUTY P.W. DIRECTOR-ENG.		2-21

APPROVED BY: Barry Beck
PUBLIC WORKS DIRECTOR
DATE 2/22/89

PHOENIX AVENUE TRUNK SEWER
CENTRAL AVE. TO ARLINGTON AVE.
Title Sheet

DESIGNED BY JOV DRAWN BY JVE CHECKED BY RCM

*AS BUILT 6/29/90 JVE
ACCOUNT No. 32-577-203
DRAWING NUMBER S-1516
SHEET 1 OF 4

INDEXED 4-28-89 JH

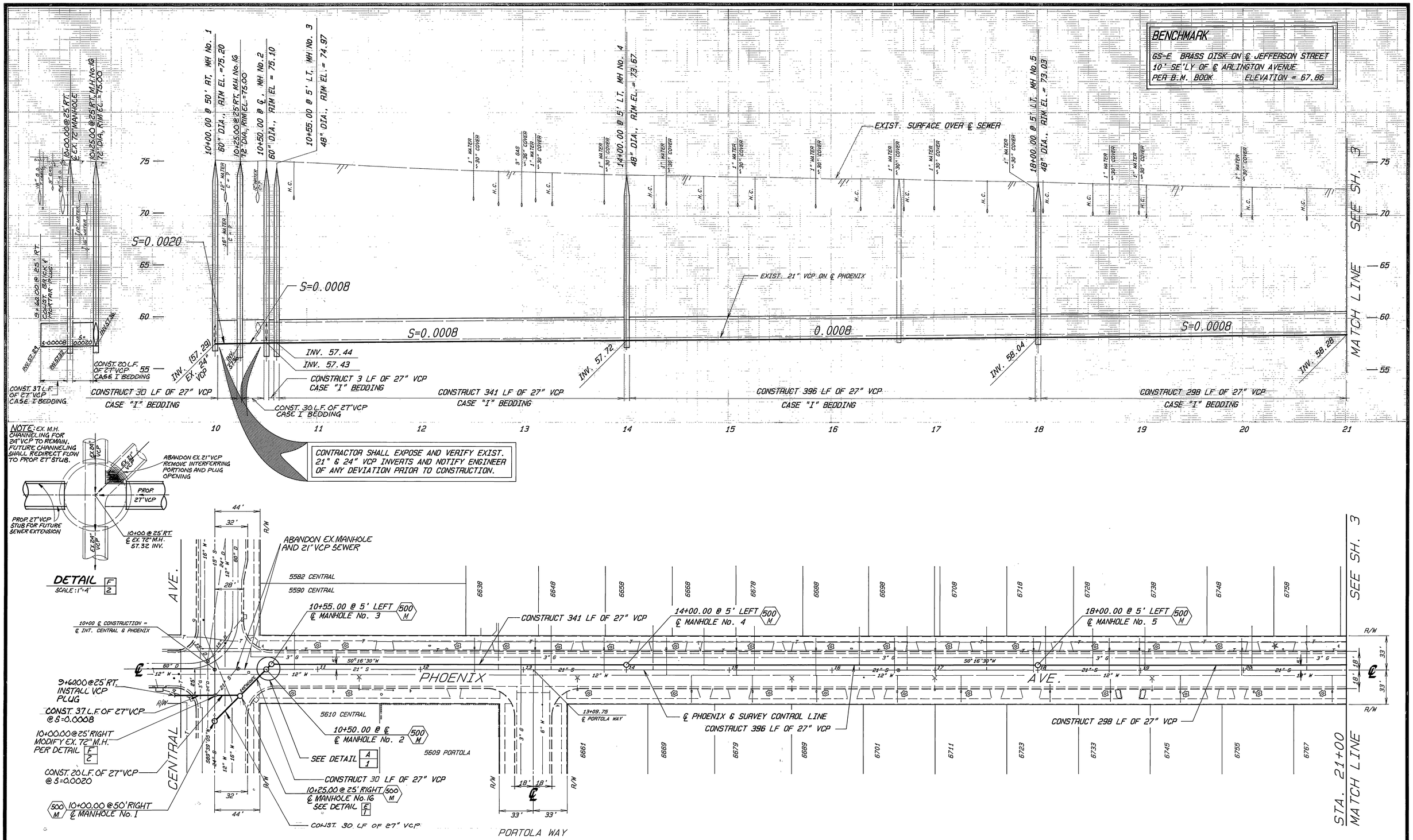

MARK	REVISIONS	APPR.	DATE

DESIGNED BY SM DRAWN BY RVZ CHECKED BY RCM

CITY OF RIVERSIDE
PUBLIC WORKS DEPARTMENT

APPROVED BY	DATE	BY
PRINCIPAL ENGINEER	2-17-89	
SURVEYOR	1/18/89	
TRAFFIC DIVISION	1-23-89	
CHIEF P.W. ENGINEER	2-21	
CHIEF P.W. INSPECTOR	1/23/89	

APPROVED BY Barry Beal
PUBLIC WORKS DIRECTOR
DATE 2/22/89

PHOENIX AVENUE TRUNK SEWER
CENTRAL AVE. TO ARLINGTON AVE.

Plan and Profile
Sta. 10+00 to Sta. 21+00

HORIZ. SCALE: 1"=40' VERT. SCALE: 1"=4'

AS BUILT 6/29/90 RCM
ACCOUNT NO. 32-577-503

S-1516

SHEET 2 OF 4

INDEXED 4-28-89 GH

OZALID- NO.1

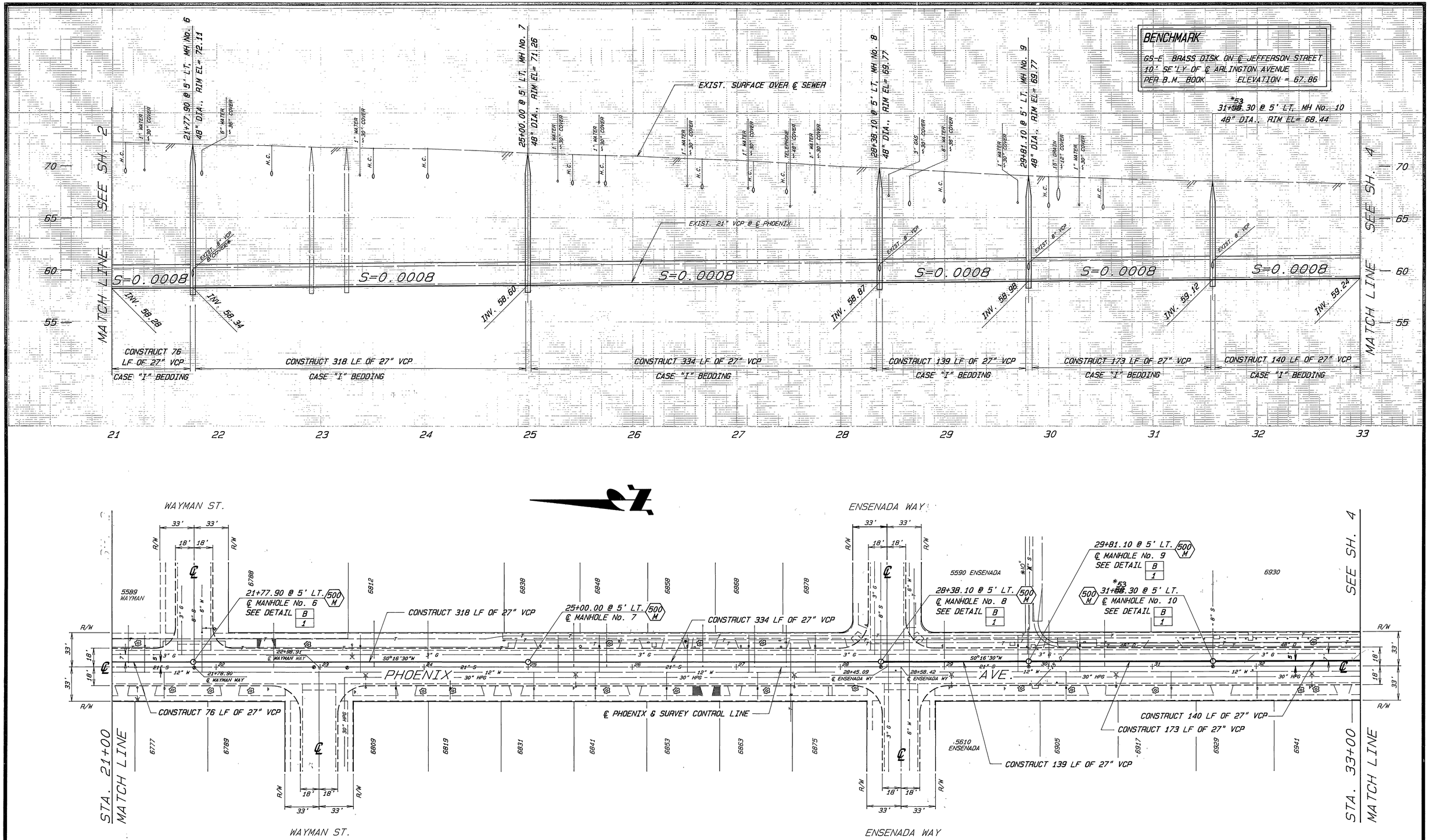

*AS BUILT 6/29/90

MARK	REVISIONS	APPR.	DATE

DESIGNED BY SW DRAWN BY RVE CHECKED BY RCM

CITY OF RIVERSIDE
PUBLIC WORKS DEPARTMENT

APPROVED BY	DATE	BY
PRINCIPAL ENGINEER	2-17-89	
SURVEYOR	1/18/89	
TRAFFIC DIVISION	1-23-89	
CHIEF P. W. ENGINEER	2-2-89	
CHIEF PW. INSPECTOR	1/23/89	

APPROVED BY Barry Beck
PUBLIC WORKS DIRECTOR
DATE 2/22/89

PHOENIX AVENUE TRUNK SEWER
CENTRAL AVE. TO ARLINGTON AVE.

Plan and Profile
Sta. 21+00 to Sta. 33+00

HORIZ. SCALE: 1" = 40' VERT. SCALE: 1" = 4'

ACCOUNT NO. 32-577-503

S-1516

SHEET 3 OF 4

INDEXED 4-28-89

81630

OZALID- NO.1

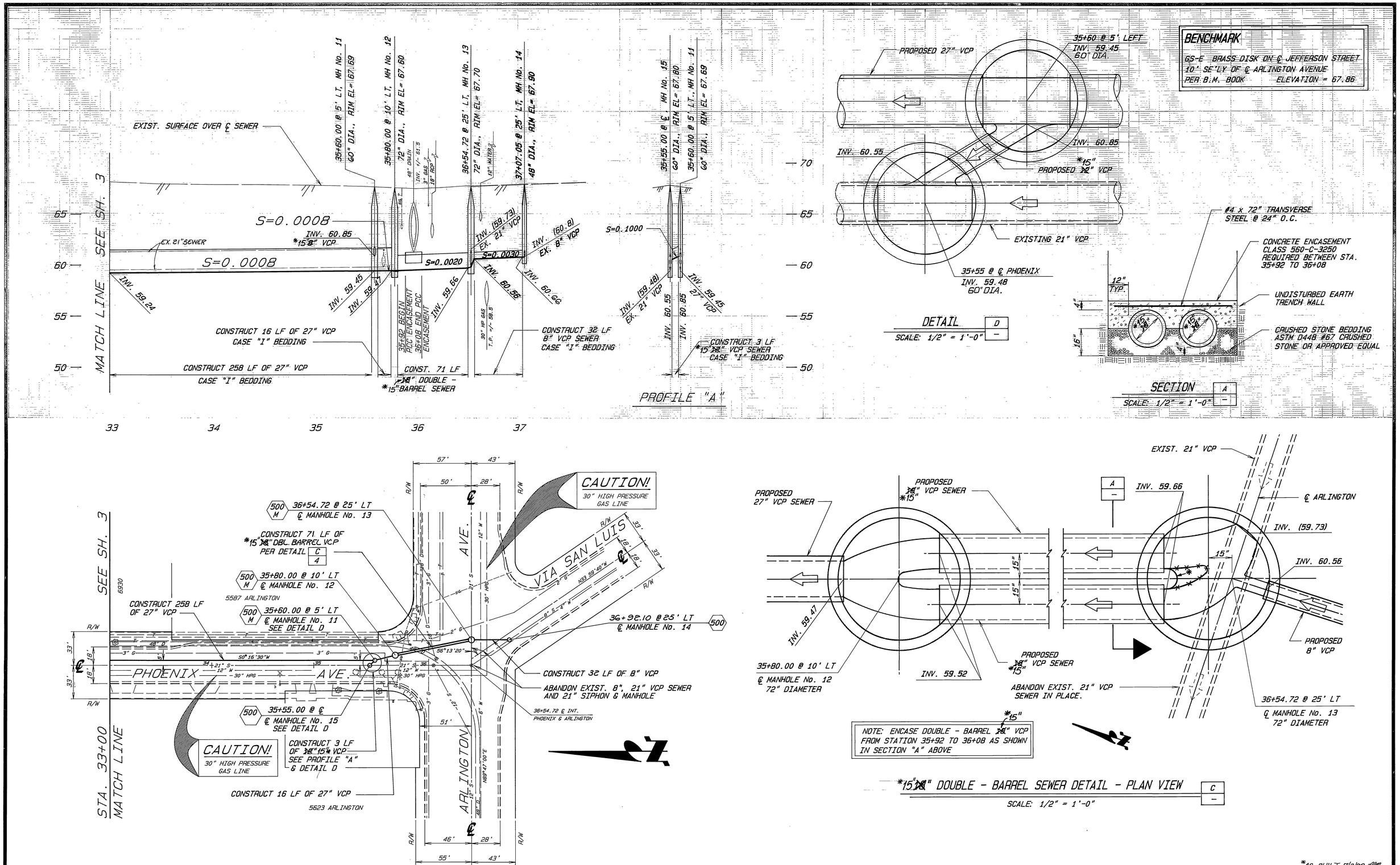

*AS BUILT 7/30/90

MARK	REVISIONS	APPR.	DATE

DESIGNED BY SJ DRAWN BY RVG CHECKED BY

CITY OF RIVERSIDE
PUBLIC WORKS DEPARTMENT

APPROVED BY	DATE	BY
PRINCIPAL ENGINEER	2-17-89	
SURVEYOR	1/19/89	
TRAFFIC DIVISION	1-23-89	
CHIEF P. W. ENGINEER	2-21	
CHIEF P.W. INSPECTOR	1/20/89	

APPROVED BY
PUBLIC WORKS DIRECTOR
DATE 2/22/89

PHOENIX AVENUE TRUNK SEWER
CENTRAL AVE. TO ARLINGTON AVE.

Plan and Profile
Sta. 33+00 to Sta. 36+92.10

HORIZ. SCALE: 1" = 40' VERT. SCALE: 1" = 4'

ACCOUNT NO. 32-577-505

S-1516

SHEET 4 OF 4

INDEXED 4-28-89

81630

OZALID-NO.1