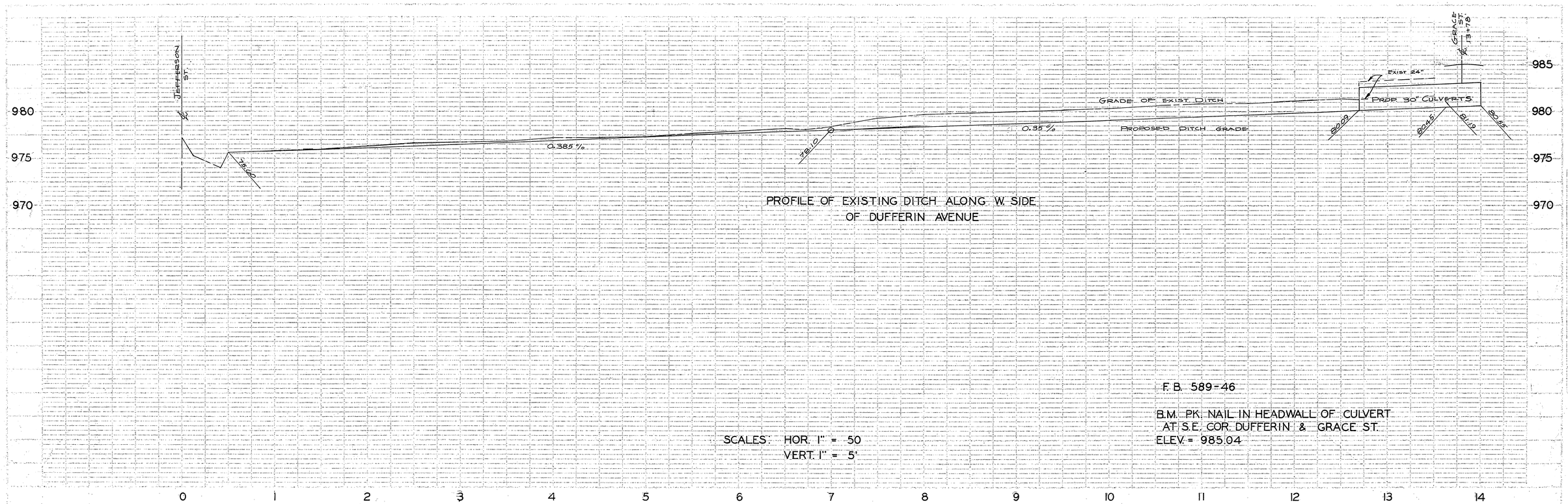

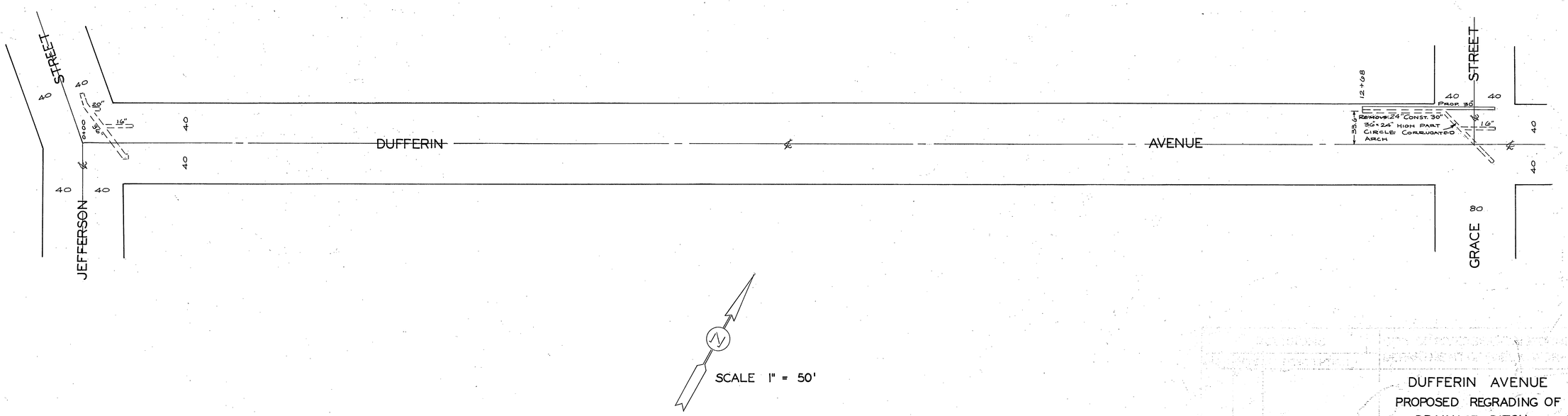

DUFFERIN AVENUE
PROPOSED REGRADING OF
DRAINAGE DITCH
JEFFERSON ST. TO GRACE ST.

B.S. Lee S. Whidden
Francis L. Taylor
Sept 4, 1956

D-11

INDEXED