APPROVED Oct. 1, 1956
A.C. Keith
A.C. KEITH, COUNTY SURVEYOR & ROAD COMMR.
R.E. 4388

DRAINAGE PLAN ARLANZA-VILLAGE SECTION

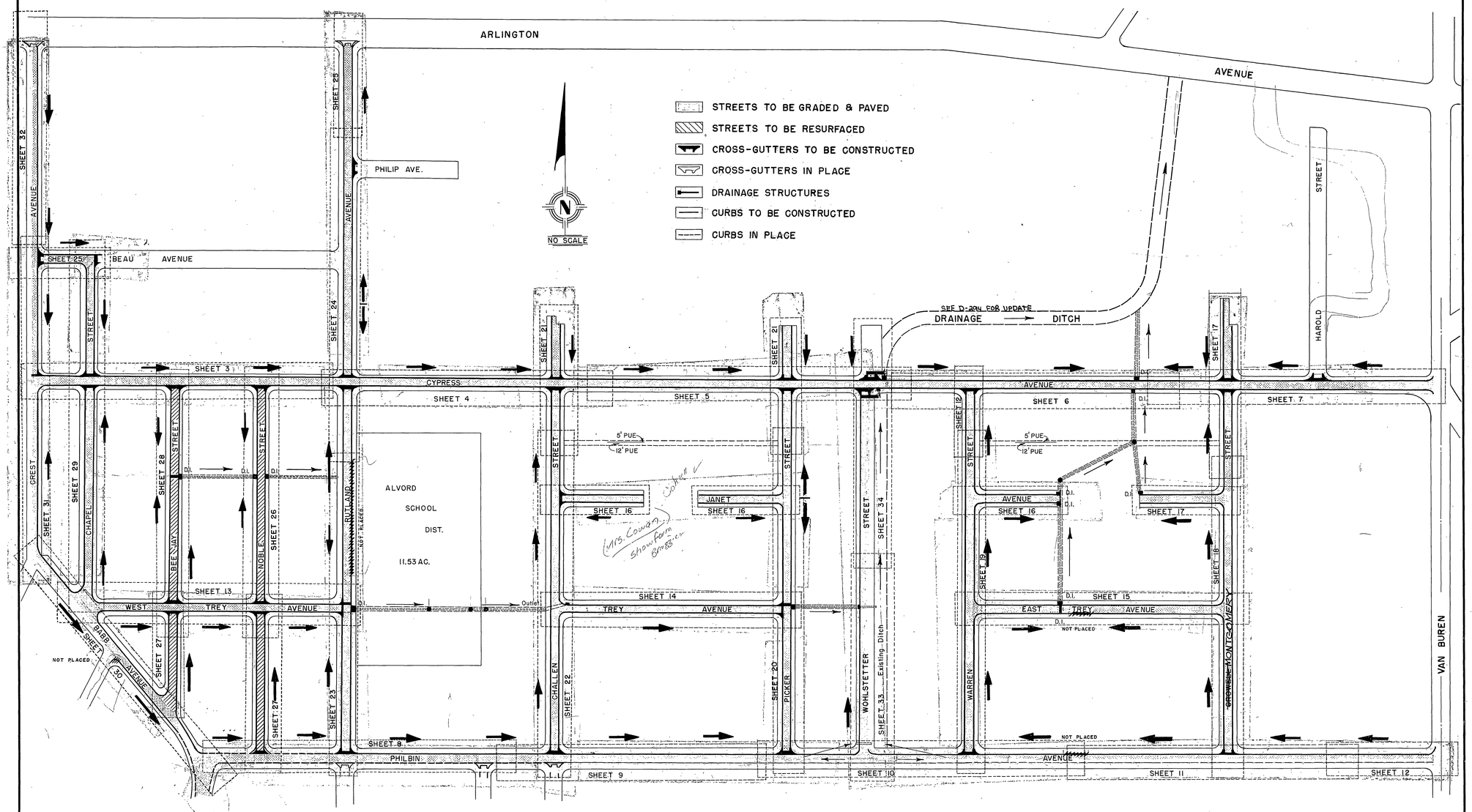

D-123

STORM DRAIN DETAILS OF RUTLAND AVENUE OUTFALL 1956

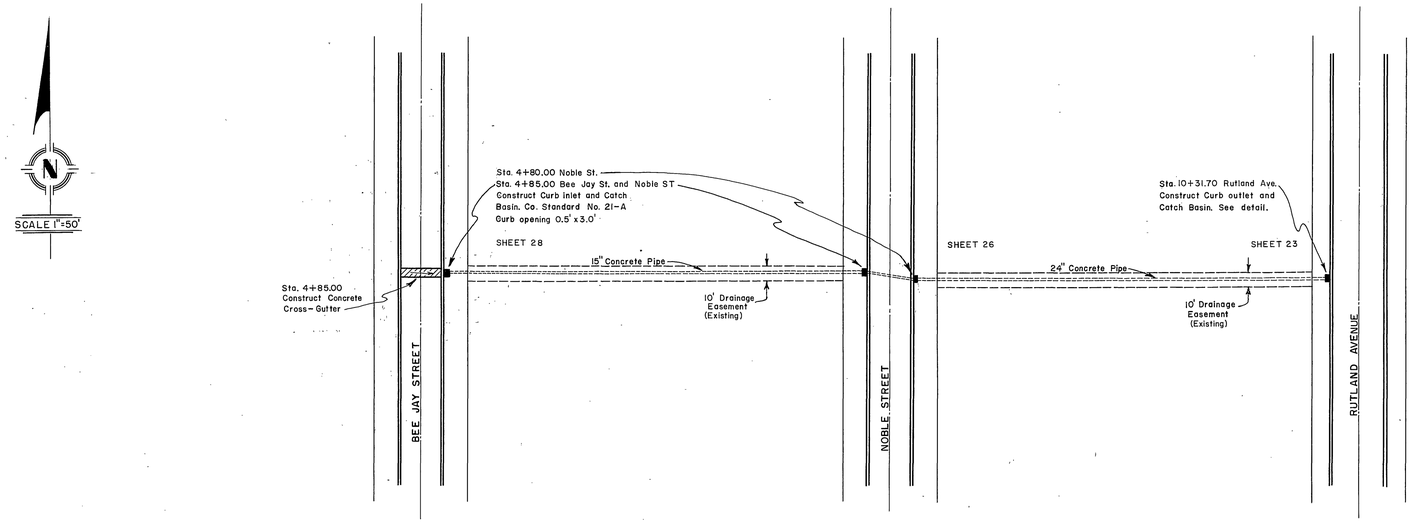

NOTE:
Siphon pipe Sta. 3+28 to Sta. 6+19 to have collared joints.

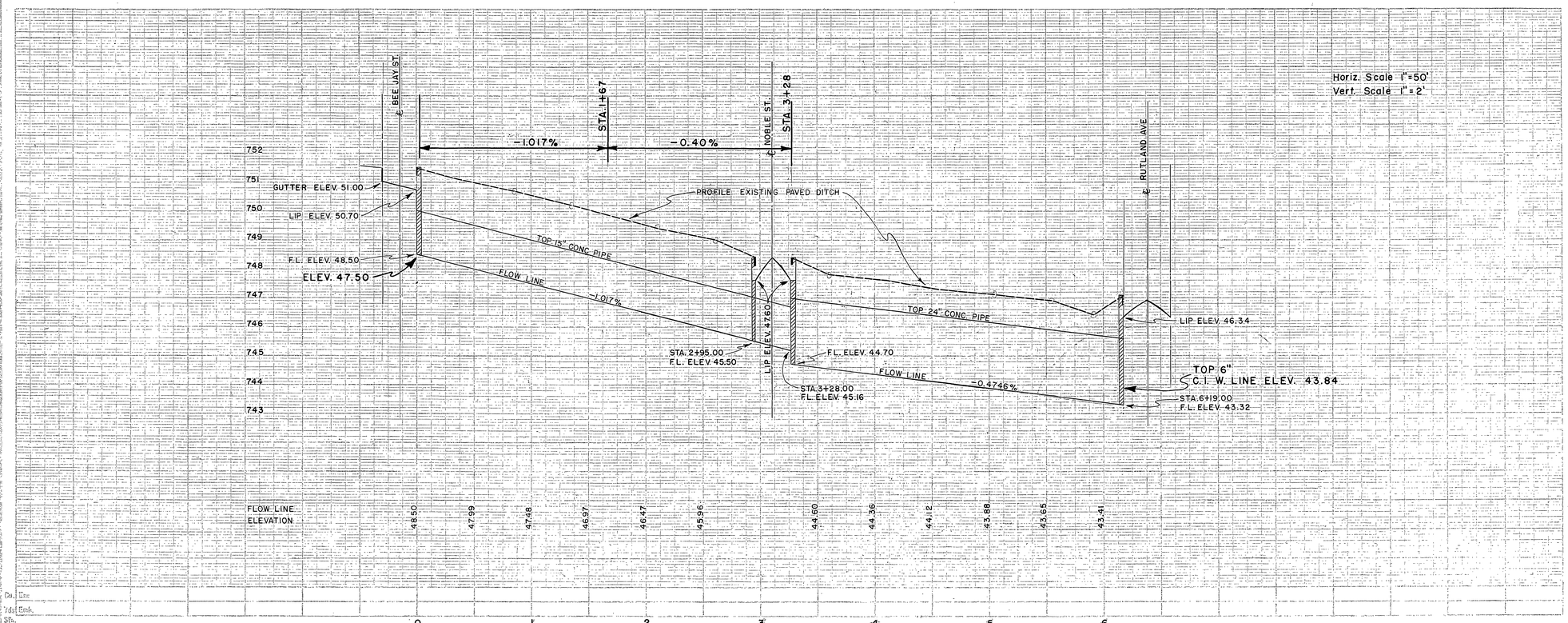

D-123
35/41

STORM DRAIN DETAILS OF CHALLEN STREET OUTFALL 1956

SCALE 1"=50'

ALVORD SCHOOL DIST.

RUTLAND AVENUE

WEST TREY AVE.

Sta. 5+69.20 Construct Curb inlet and Catch Basin. Co. Standard No. 21-A Curb opening 0.5' x 5.0'

SHEET 13 & 23

17.5

300'

10' P.U.E.

Construct 30" Cleanout See detail.

300'

21" Concrete Pipe

Construct 30" Cleanout See detail

56'

SHEET 14 & 22

17.5

Cohen, David I. 299

300

CHALLEN STREET

Transition to 6" Curb at P.C.R Sta. 5+92.87

Sta. 0+43.50 Construct Curb outlet and Catch Basin. See detail, Sheet 39

Transition to 6" Curb at Sta. 0+65.00

TREY AVE

STA. 0+00 TREY AVE.

NOTE:

30" Cleanout at Sta. 3+00 and Sta. 6+00 to be equipped with Alhambra Foundry Series A-1263 Medium Wt. Manhole Covers or equal.

Distance Inlet to Outlet 918' ±

Siphon pipe Sta. 6+00 to outlet box Sta. 0+43.50 Trey Ave. to have collared joints.

Horiz. Scale 1"=50'
Vert. Scale 1"=2'

LIP OF INLET ELEV. 45.00

30" CLEANOUT ELEV. 45.00

Existing Ground Line

30" CLEANOUT ELEV. 43.40

CHALLEN ST.

STA. 0+43.50 TRAY AVE.

TOP OF 21" R.C. PIPE

F.L. ELEV. 42.00

FLOW LINE

-0.5978%

21" CONC. PIPE

LIP OF OUTLET ELEV. 39.50

F.L. ELEV. 36.50

746 745 744 743 742 741 740 739 738 737 736

FLOW LINE GRADES

42.00 41.70 41.40 41.10 40.80 40.51 40.21 39.91 39.61 39.31 39.01 38.71 38.41 38.11 37.82 37.52 37.22 36.92 36.62

Cu. Yds. Exc.
Cu. Yds. Emb.
Sta.

0 1 2 3 4 5 6 7 8 9

D-123

STORM DRAIN DETAILS
OF
PICKER STREET OUTFALL
1956

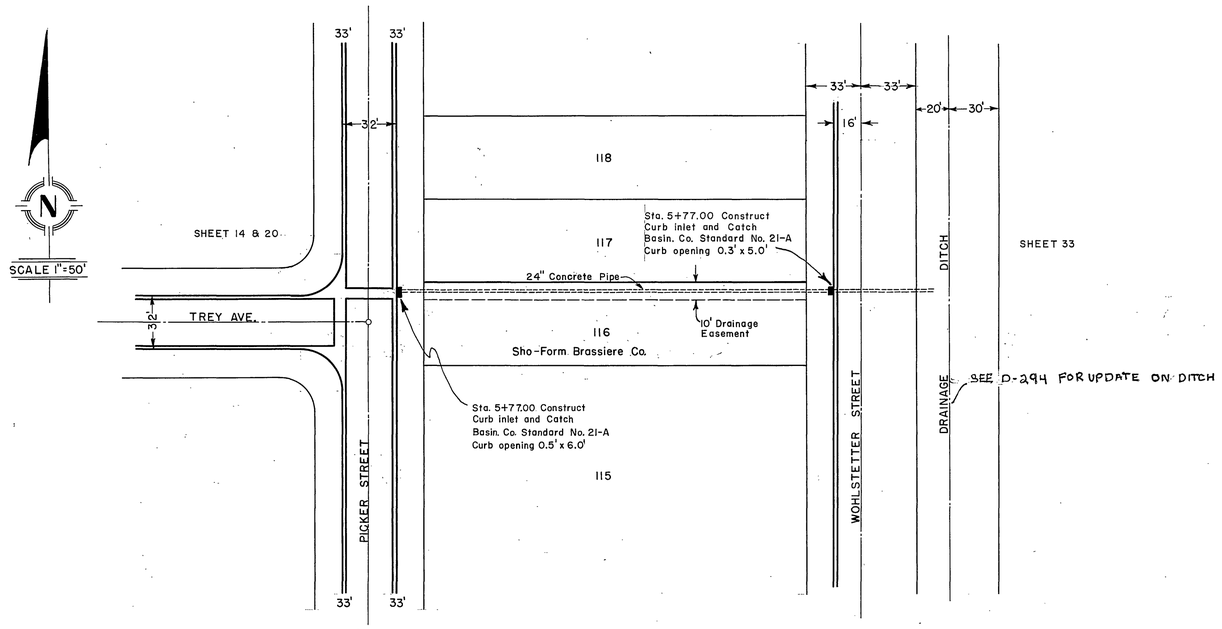

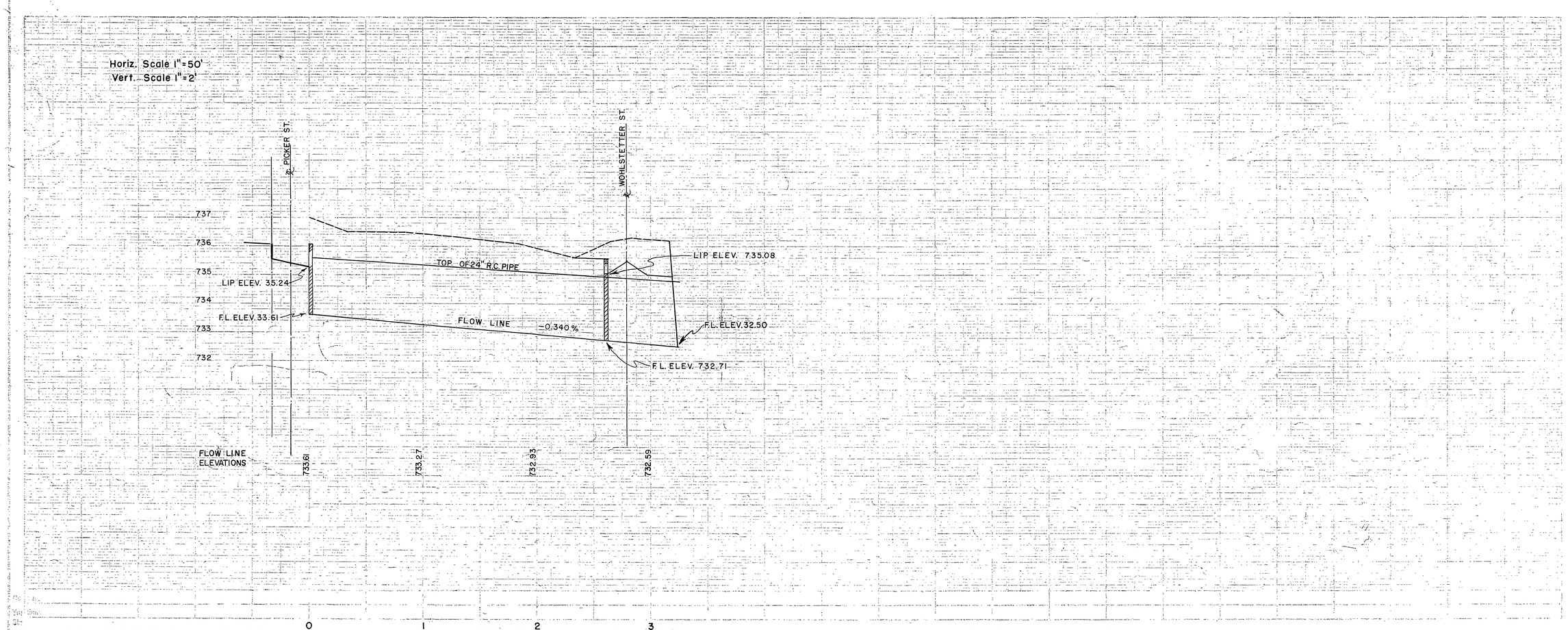

STORM DRAIN DETAILS OF CYPRESS AVENUE OUTFALL 1956

SHEET 15

Sta. 3+37.73 East Trey Ave. Construct Catch basin See Sheet 41

Sta. 3+37.73 Construct concrete cross gutter.

Carlson, Herbert E. (E.A) 195

196

Litke, Arnhold (Leah J.) 214

10' Drainage Easement

21" R.C. Pipe

JANET AVE.

(Sold for taxes) 225

Sta. 4+50.00 Construct 30" cleanout. See detail.

12' PUE.

5' PUE.

17' PUE (Existing)

Sta. 3+37.73 Janet Ave., both sides Construct Curb inlets and Catch basins. Co. Standard No. 21-A Curb openings. 0.5' x 3.0'

SHEET 16

238

21" R.C. Pipe

10' Drainage Easement

EAST TREY AVE.

CYPRESS AVE.

Parcel 23-84 Assessors Map

Hard, Homer E.

Sta. 44+00 Cypress Ave. Construct Curb inlet and Catch basin. Co. Standard No. 21-A Curb opening. 0.5' x 3.0'

SHEET 6

Sta. 44+18 Cypress Ave. Construct Curb inlet and Catch basin. Co. Standard No. 21-A Curb opening 0.5' x 3.0'

Hall, James (Dorothy M.) 262

10' Drainage Easement

21" R.C. Pipe

263

Haughtaling, Howard G. (Ruth P.)

278-C Manjoris, Costis (Ruth)

30' 20'

DRAINAGE DITCH

200' Rad.

SEE D-294 FOR UPDATE ON DRAIN DITCH

Sta. 0+03.00 Janet Ave. Construct Curb inlet and Catch basin. Co. Standard No. 21-A Curb opening 0.5' x 3.0'

SHEET 17

10' Drainage Easement

21" R.C. Pipe

Sta. 7+72.24 Construct 30" cleanout See detail

213

JANET AVE.

226

237

Thompson, William J.

SCALE 1"=50'

JANET AVE. DRAINAGE DETAIL
0+00 = BACK OF CURB

733
732
731
730
729

TOP 21" R.C. PIPE

LIP ELEV. = 32.42

0.40%

FLOW LINE

30.41 30.21 30.01 29.81 29.66

STA. 2+00± 30" CLEANOUT

STA. 7+72.24 BELOW

0 1 2

EAST TREY AVE. 0+00 = BACK OF CURB

CONC. X-GUTTER

734
733
732
731
730

TOP 21" R.C. PIPE

0.15%

FLOW LINE

JANET AVE. STA. 3+77.00 ℄

STA. 4+50 30" CLEANOUT TOP ELEV. = 34.00

IDENTICAL POINTS

STA. 7+72.24 CONSTRUCT 30" CLEANOUT TOP ELEV. 33.80

TOP OF 21" R.C. PIPE

TOP OF 21" R.C. PIPE

TOP OF 21" R.C. PIPE

0.20%

0.20%

CYPRESS AVE. STA. 9+89.67 ℄

734
733
732
731
730
729
728

JOIN EXISTING DRAIN DITCH STA. (12+80±) 12+86

Horiz. Scale 1"=50'
Vert. Scale 1"=2'

FLOW LINE ELEVATION

30.96 30.89 30.81 30.74 30.66 30.59 30.51 30.44 30.42 30.36 30.35 30.25 30.15 30.05 29.95 29.85 29.75 29.65 29.61 29.55 29.45 29.35 29.25 29.21 29.15 29.13 29.05 28.95 28.85 28.75 28.65

Sta. Inc.
Yd. Emb.

0 1 2 3 4 5 6 7 8 9 10 11 12

D-123

30

APPROVED Oct. 1 1956
G.C. Keith
A.C. KEITH, COUNTY SURVEYOR & ROAD COMMR.
R.E. 4388

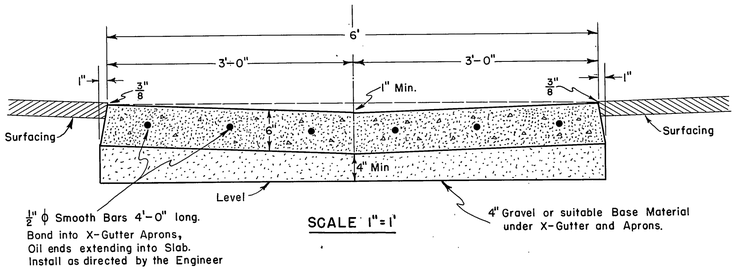

SCALE 1"=1'

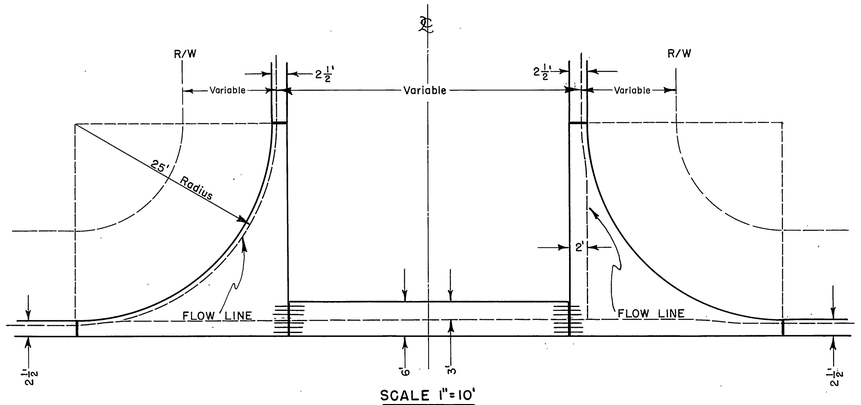

SCALE 1"=10'

Expansion Joint shown thus – ⊢⊣
Aprons shall be a Minimun of 6" thickness
X-Gutter shall be a Minimun of 6" thickness

CROSS GUTTER LAYOUT

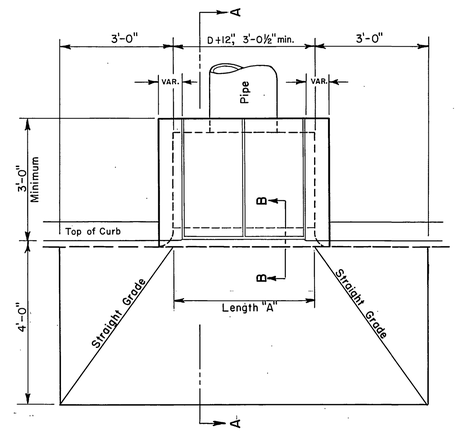

PLAN

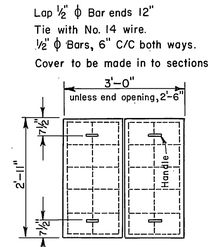

COVER PLAN

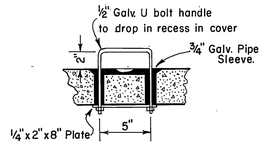

HANDLE DETAILS

NOTES:

1. Horizontal protection Bar shall be used when Curb Face is more than 12 inches.
2. Lettered dimensions are variable.
3. Outlet may be made in any direction.
4. All exposed concrete surfaces shall conform in grade color and finish. to all adjoining Curb.
5. Note: D= nominal diameter of Pipe.
6. Angle iron over end opening, when required, to be paid for as reinforcing steel. Fill space below invert of pipe with conc. when directed by the Engineer.

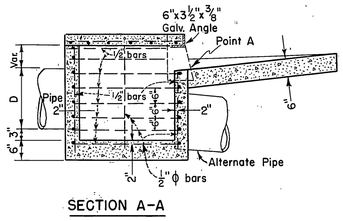

SECTION A-A

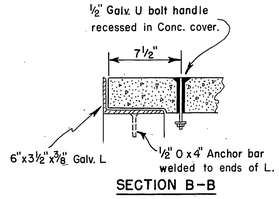

SECTION B-B

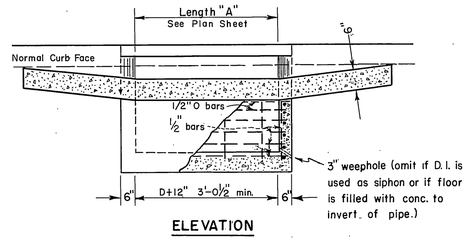

ELEVATION

CURB INLET CATCH BASIN

CO. STD. NO. 21-A

DETAILS 30" CLEANOUT

SEE PLANS FOR LOCATIONS

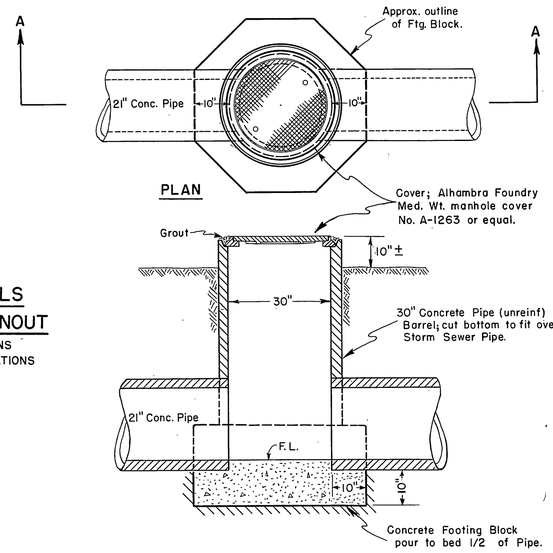

SECTION A-A

SCALE 1"=2'

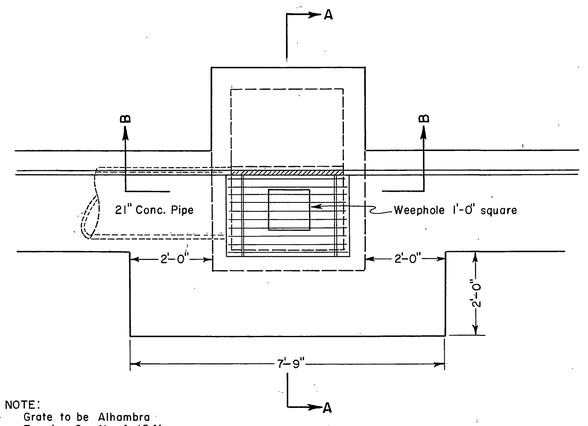

NOTE:
Grate to be Alhambra Foundry Co. No. A-1541 or equal.

PLAN

NOTE:
All reinforcing to be 1/2" bars at 12" centers.

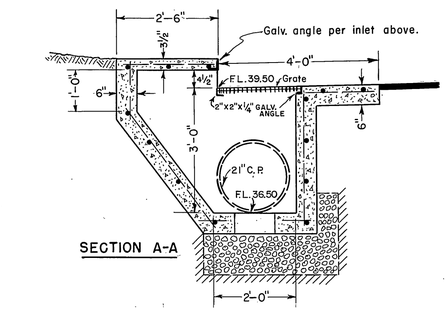

SECTION A-A

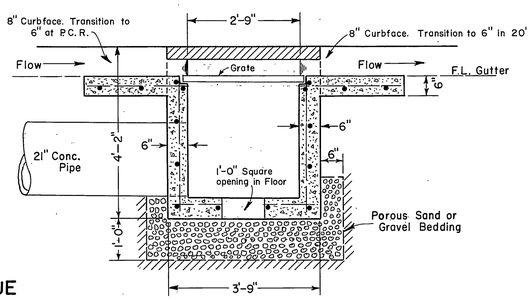

SECTION B-B

DETAILS FOR OUTLET at Sta. 0+43.50 TREY AVENUE

SCALE 1"=2'

SEE SHEET 14

D-123

39/41

APPROVED Oct 1 1956
G.C. Keith
A.C. KEITH, COUNTY SURVEYOR & ROAD COMMR.
R.E. 4388

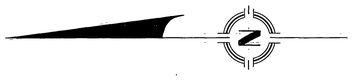

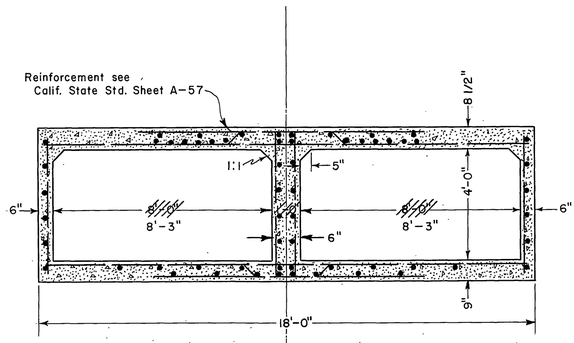

View A-A

CONCRETE ENTIRELY REMOVED TO MAKE POSSIBLE THE CONSTRUCTION OF NEW SIDE WALL, WINGWALL, AND FOOTING.

Type "B" Headwalls, Footings, and Cutoff walls will be built in conformance with California State Standard Sheet No. A-60.

CONCRETE REMOVED APPROX. 1' BACK TO JOIN TO EXISTING REINFORCING.

FLOW

GRANITE RIP-RAP 3' + IN DIA., REMOVED.

25'-5 1/2"

10"

Outside Edge Future Sidewalk

Face of Curb

P.C.R. End of Curb

P.C.R. Sta. 34+42.67

9'-0"

6'-0"

5'-0"

12" Headwall

DOWELS SET IN HOLES DRILLED IN BOTTOM SLAB.

DOWELS SET IN HOLES DRILLED IN CENTER WALL.

BOTTOM SLAB PREVIOUSLY IN PLACE

30'-0"

19'-0"

11'-0"

6"

8'-0"

12"

8'-0"

6"

4'-0"

27'-0"

BOTTOM SLAB PREVIOUSLY IN PLACE.

12" Headwall extending 12" above existing Pavement

DOWELS SET IN HOLES DRILLED IN CENTER WALL.

DOWELS SET IN HOLES DRILLED IN BOTTOM SLAB

9'-0"

17'-0"

5'-3"

10" 1'-5"

6'-0"

A

5'-0"

CONCRETE REMOVED APPROX. 1' BACK TO JOIN TO EXISTING REINFORCING.

Face of Curb

Outside Edge Future Sidewalk

18'-0"

17'-0"

A

P.C.R. Sta. 34+19.67

6'-0"

ALL EXISTING WINGWALLS APPROX 3' THICK AT BOTTOM.
REMOVED AS NECESSARY TO BUILD NEW SIDE WALLS.

Sta. 34+32, Cypress Ave. Lengthen existing double 4' x 8' Box Culvert as shown above. Removal of concrete headwalls and wingwalls will be considered as included in the Bid price. Existing structure is indicated by cross-hatched lines. Bar reinforcing steel will conform to California State Standard Sheet No. A-57, and A-60 attached. All existing wingwalls are 13' long

Approximate Quantities:
- Bar Reinf. Steel - 6500 lbs.
- Class "A" P.C.C. - 64.0 C.Y.

SCALE 1" = 3'

SEE SHEET 5

D-123

APPROVED Nov. 9, 1956
G. C. Keith
A. C. KEITH, COUNTY SURVEYOR & ROAD COMMR.
R.E. 4388

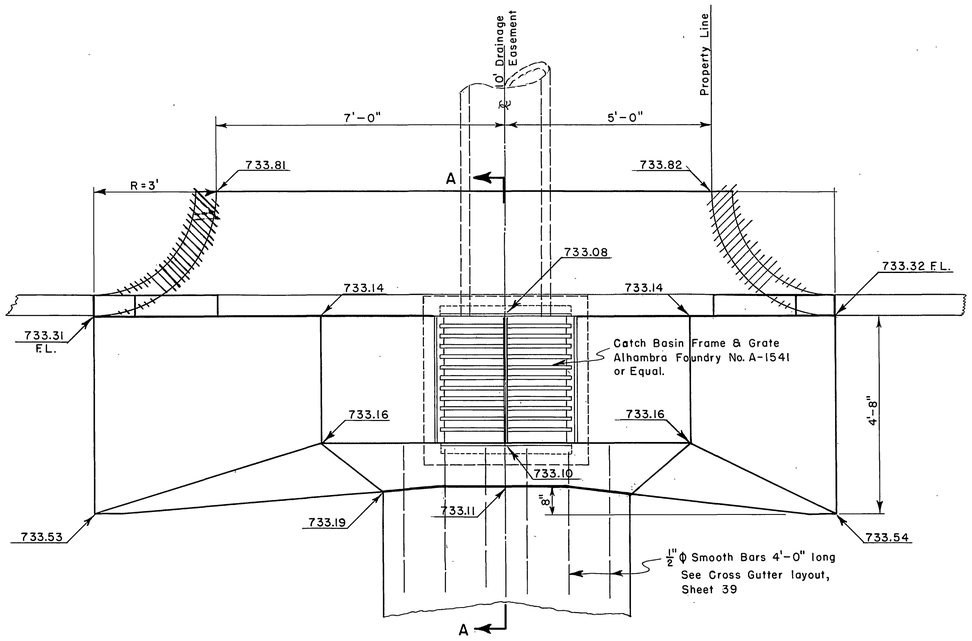

PLAN

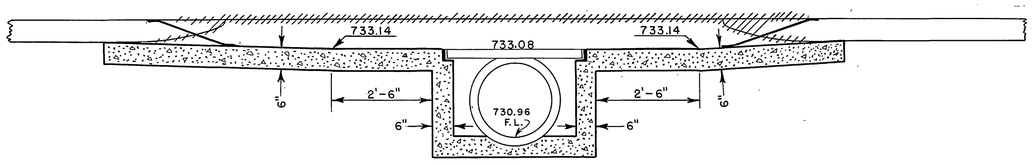

SECTION ALONG CURB FACE

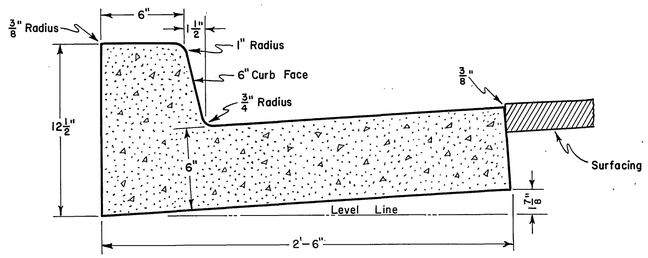

TYPE "B" CURB
SCALE 1"=6'

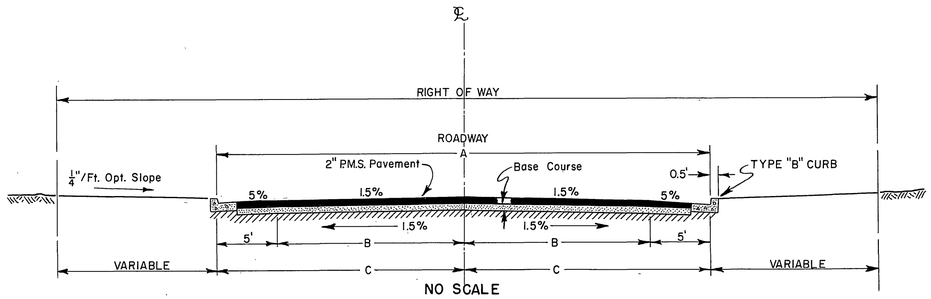

NO SCALE

A	30'	32'	36'	40'	44'
B	10'	11'	13'	15'	17'
C	15'	16'	18'	20'	22'

GRADING & PAVING NOT A PART OF THIS CONTRACT.

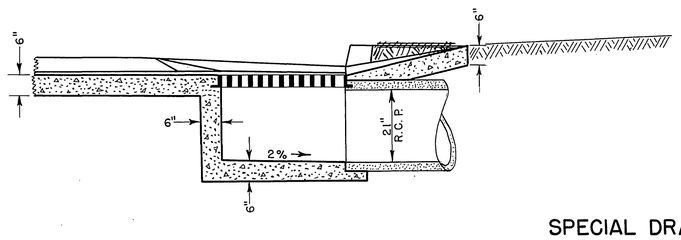

SECTION A-A

SPECIAL DRAINAGE STRUCTURE
STA. 3+37.73
EAST TREY AVE.
SCALE: 1/2"=1'-0"
SEE SHEET - 15

NAME		LIMITS			WIDTH
BABB	AVE.	CREST	TO	PHILBIN	36'
BEAU	AVE.	CREST	TO	CHAPEL	32'
BEE JAY	ST.	CYPRESS	TO	BABB	32'
CHALLEN	ST.	PHILBIN	TO	CYPRESS	36'
CHALLEN	ST.	CYPRESS	TO	END	32'
CHAPEL	ST.	WEST TREY	TO	CYPRESS	36'
CROWELL	ST.	PHILBIN	TO	CYPRESS	36'
CROWELL	ST.	CYPRESS	TO	END	32'
CYPRESS	AVE.	CREST	TO	VAN BUREN	44'
EAST TREY	AVE.	WARREN	TO	CROWELL	36'
JANET	AVE	CHALLEN	TO	PICKER	32'
JANET	AVE	WARREN	TO	CROWELL	32'
NOBLE	ST.	PHILBIN	TO	WEST TREY	36'
NOBLE	ST.	WEST TREY	TO	CYPRESS	32'
PHILBIN	AVE	BABB	TO	VAN BUREN	40'
PICKER	ST.	PHILBIN	TO	CYPRESS	36'
PICKER	ST.	CYPRESS	TO	END	32'
RUTLAND	AVE.	PHILBIN	TO	ARLINGTON	40'
TREY	AVE.	CHALLEN	TO	PICKER	36'
WARREN	ST.	PHILBIN	TO	CYPRESS	36'
WEST TREY	AVE.	BABB	TO	RUTLAND	32'
CHAPEL	ST.	CYPRESS	TO	BEAU	32'

D-123
41/41