## BENCH MARKS:

1. Elev. 997.623 C/R F.B. 625 PK in N.W. curb return University Ave & Iowa.
2. Elev. 996.63 F.B. 558 page 45, Top Mon. inside Caped Mon. Int. University & Iowa 4' North of & of R/W Sta. 0+00.

**CAUTION**

Telephone underground, contact Pacific Telephone Co. 24 hr. prior to Const. Phone 686-0037.

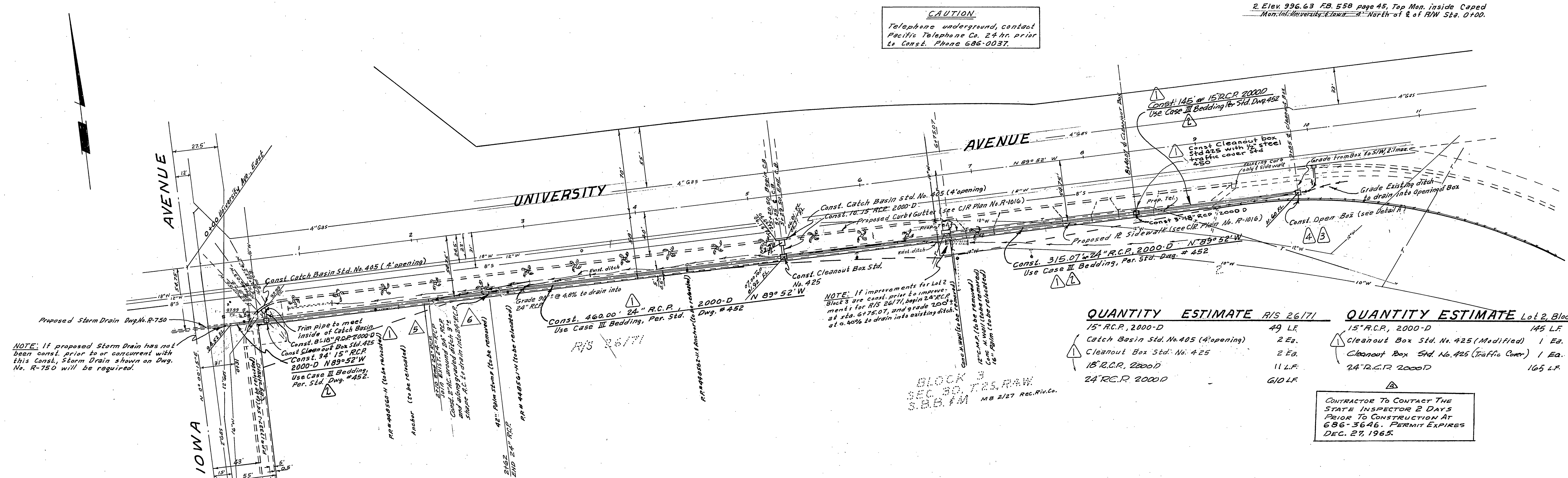


NOTE: If proposed Storm Drain has not been const. prior to or concurrent with this Const., Storm Drain shown on Dwg. No. R-750 will be required.

NOTE: If improvements for Lot 2 Block 3 are const. prior to improvements for R/S 26/71, begin 24" R.C.P. at sta. 6+75.07, and grade 200'± at 0.40% to drain into existing ditch.

### QUANTITY ESTIMATE R/S 26/71

| | |
|---|---|
| 15" R.C.P., 2000-D | 49 L.F. |
| Catch Basin Std. No. 405 (4' opening) | 2 Ea. |
| Cleanout Box Std. No. 425 | 2 Ea. |
| 18" R.C.P. 2000D | 11 L.F. |
| 24" R.C.P. 2000D | 610 L.F. |

### QUANTITY ESTIMATE Lot 2, Block 3

| | |
|---|---|
| 15" R.C.P., 2000-D | 145 L.F. |
| Cleanout Box Std. No. 425 (Modified) | 1 Ea. |
| Cleanout Box Std. No. 425 (Traffic Cover) | 1 Ea. |
| 24" R.C.P. 2000D | 165 L.F. |

CONTRACTOR TO CONTACT THE STATE INSPECTOR 2 DAYS PRIOR TO CONSTRUCTION AT 686-3646. PERMIT EXPIRES DEC. 27, 1965.

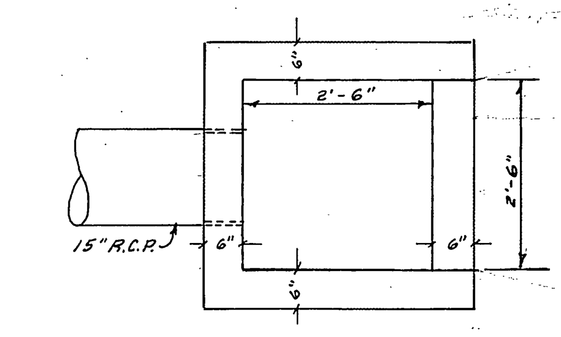


TOP VIEW
NO SCALE

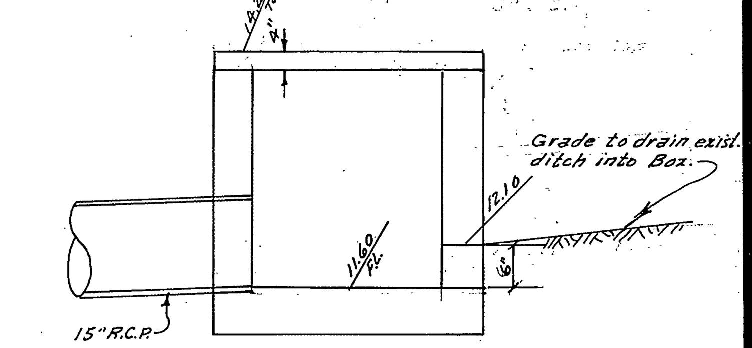


DETAIL A
NO SCALE

To be Const. per Standard Dwg. No. 425 without frame & cover & one side, as shown.

NOTE: The Contractor is to get the necessary encroachment permits, to work on State Right of Way.

| Mark | Revisions | Appr. | Date |
|---|---|---|---|
| 6 | Added End Const., 24" RCP @ 2+62 ENW | wbw | 10.28.71 |
| 5 | Added End Const., 24" RCP @ 2+10 ENW | | |
| 4 | Added Note To Contact State Insp. | | |
| 3 | Revised C.O. Box to Open Box / ENW | | |
| 2 | Changed Case I Bedding to Case III / E.N.W. | | 5.27 |
| 1 | Add C.O. Box - Changed Pipe Sizes / E.N.W. | | |

DESIGNED BY BEL DRAWN BY BEL CHECKED BY

ALBERT A. WEBB ASSOCIATES
CIVIL ENGINEERS
RIVERSIDE, CALIFORNIA

APPROVED BY Ernest N. Webb DATE 1/19/65
R.E. No. 9876

W.O. 64-402 FOR: JIMMY TOTMAN F.B. 558

CITY OF RIVERSIDE, CALIFORNIA
DEPARTMENT OF PUBLIC WORKS

| Approved by | By | Date |
|---|---|---|
| Office Engineer | wdg | 4-16 |
| Park Department | | |
| Traffic Division | | |
| Assistant City Eng. | | 4-16 |

APPROVED BY
DIRECTOR OF PUBLIC WORKS
DATE 4-19-65

# STORM DRAIN PLAN & PROFILE

## UNIVERSITY AVENUE
BETWEEN IOWA AVE & F/W
SOUTHERLY SIDE

HORIZ. SCALE: 1" = 50' VERT. SCALE: 1" = 5'

INDEXED

PROJECT NO. D-130

SHEET 1 OF 1

FILE NO. 64-402-D