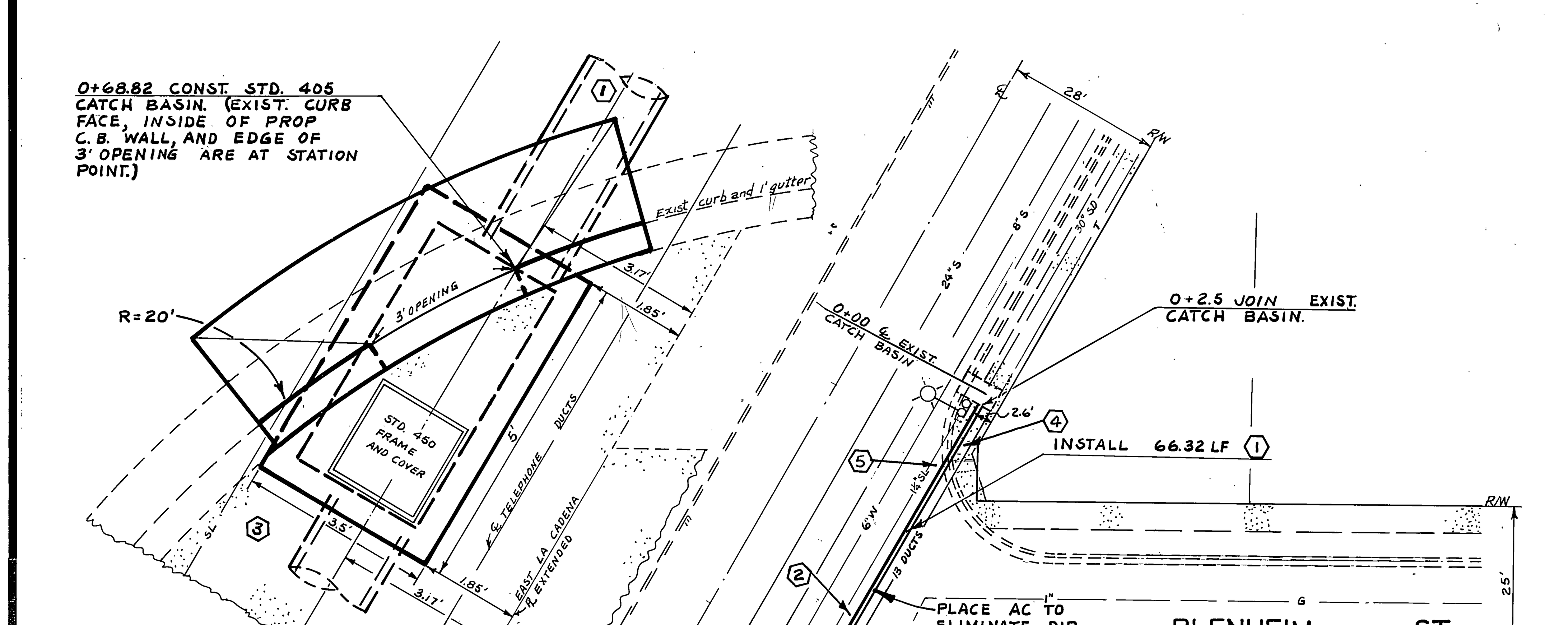

MODIFIED
CATCH BASIN
STD. 405

STATION POINT 0+68.82

SCALE 1"= 2'

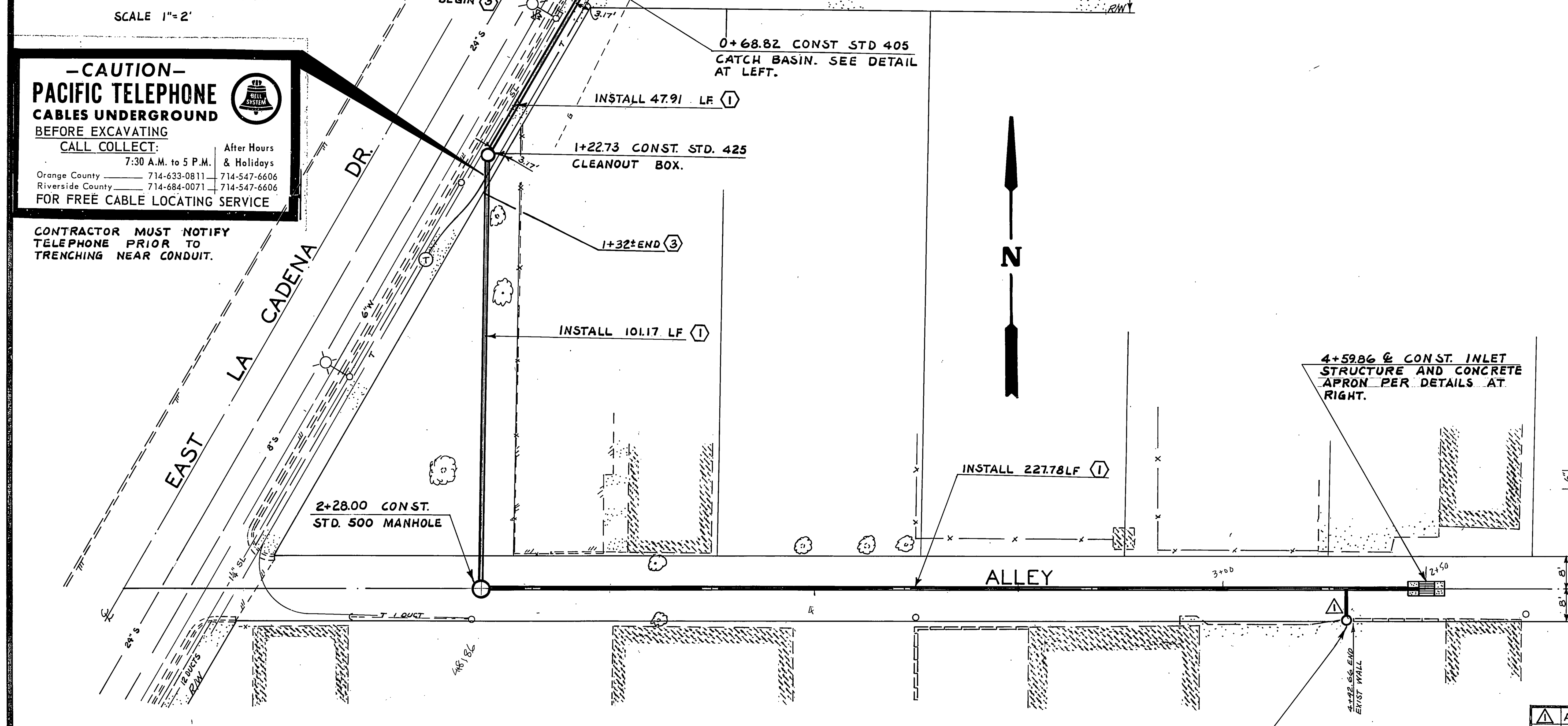

CONTRACTOR MUST NOTIFY TELEPHONE PRIOR TO TRENCHING NEAR CONDUIT.

4+42 7.3'± RIGHT INSTALL 8" DIAMETER GRATE INLET. GRATE TO BE ALHAMBRA FOUNDRY No. A-353-2 OR APPROVED EQUAL. CONNECT INLET TO 15" STORM DRAIN WITH 7' OF 8" PIPE. BED PER STD. 452 CASE IV. SEE PROFILE ABOVE RIGHT.

CONSTRUCTION NOTES

1. INSTALL 15" RCP OR 16" DOUBLEWALL CONCRETE PIPE, AS DETERMINED BY THE CONTRACTOR. BED PER SCHEDULES AT RIGHT. EXCEPT WHERE OTHERWISE NOTED, COMPACT TOP 12" OF DIRT BACKFILL IN TRENCHES TO 90% RELATIVE COMPACTION; COMPACT REST OF DIRT BACKFILL IN TRENCHES TO 85% RELATIVE COMPACTION. SAND BACKFILL MAY BE USED IN TRENCHES AT NO EXTRA COST TO THE CITY.
2. REPLACE A.C. IN STREET TRENCHES 6" AC OVER NATIVE SOIL COMPACTED TO 95% RELATIVE COMPACTION FOR THE TOP 6". AC TO BE PLACED IN ONE LIFT.
3. REMOVE 5' SIDEWALK IN ITS ENTIRETY. REPLACE PER STD. 350.
4. REMOVE SIDEWALK TO TRENCH WIDTH (OD+2') OR NEAREST SCORE LINE AS DIRECTED BY THE ENGINEER. REPLACE PER STD. 350. EXTRA SIDEWALK REMOVED AT THE CONTRACTOR'S OPTION SHALL BE REPLACED BY THE CONTRACTOR AT HIS EXPENSE.
5. REPLACE CURB AND GUTTER PER STD. No. 200.

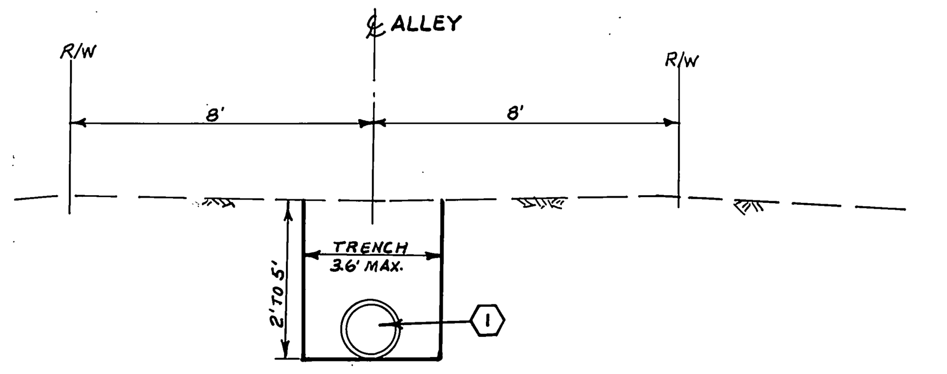

ALLEY TYPICAL
CROSS SECTION

STA. 2+33 TO STA 4+57.86

SCALE 1"= 4'

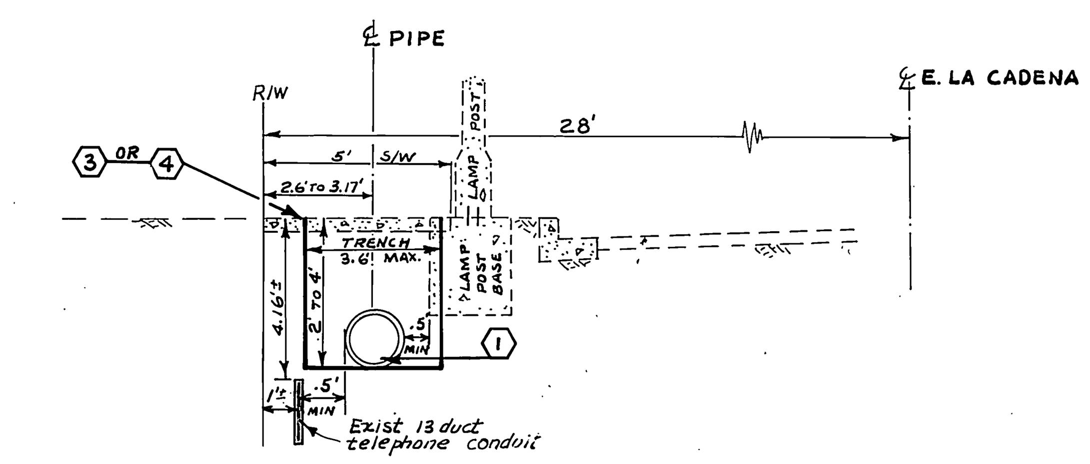

EAST LA CADENA DR.
TYPICAL CROSS SECTION

STA. 0+2.5 TO STA. 1+20.73

SCALE 1"= 4'

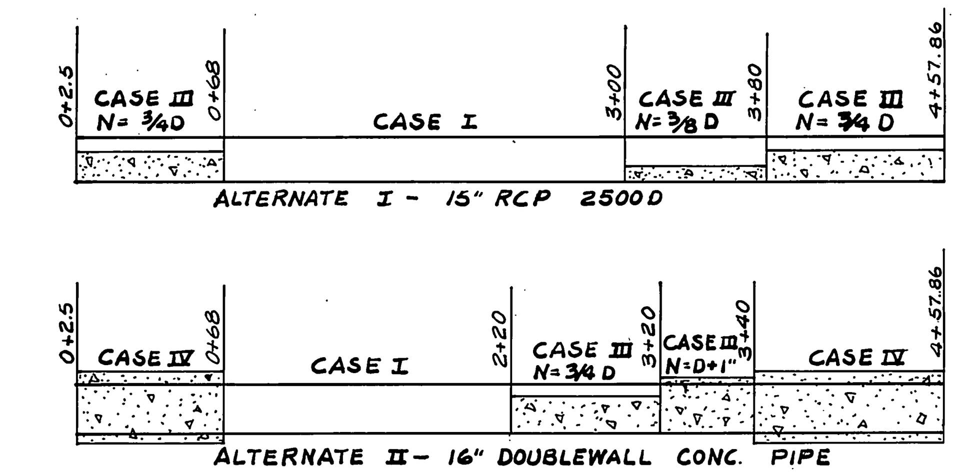

BEDDING SCHEDULES FOR
PROPOSED PIPE ALTERNATES

BEDDINGS FOR BOTH ALTENATES ARE PER STD. DWG. No. 452

NOT TO SCALE

FOR ELEVATIONS AND CONCRETE APRON LIMITS SEE DETAIL AT RIGHT.

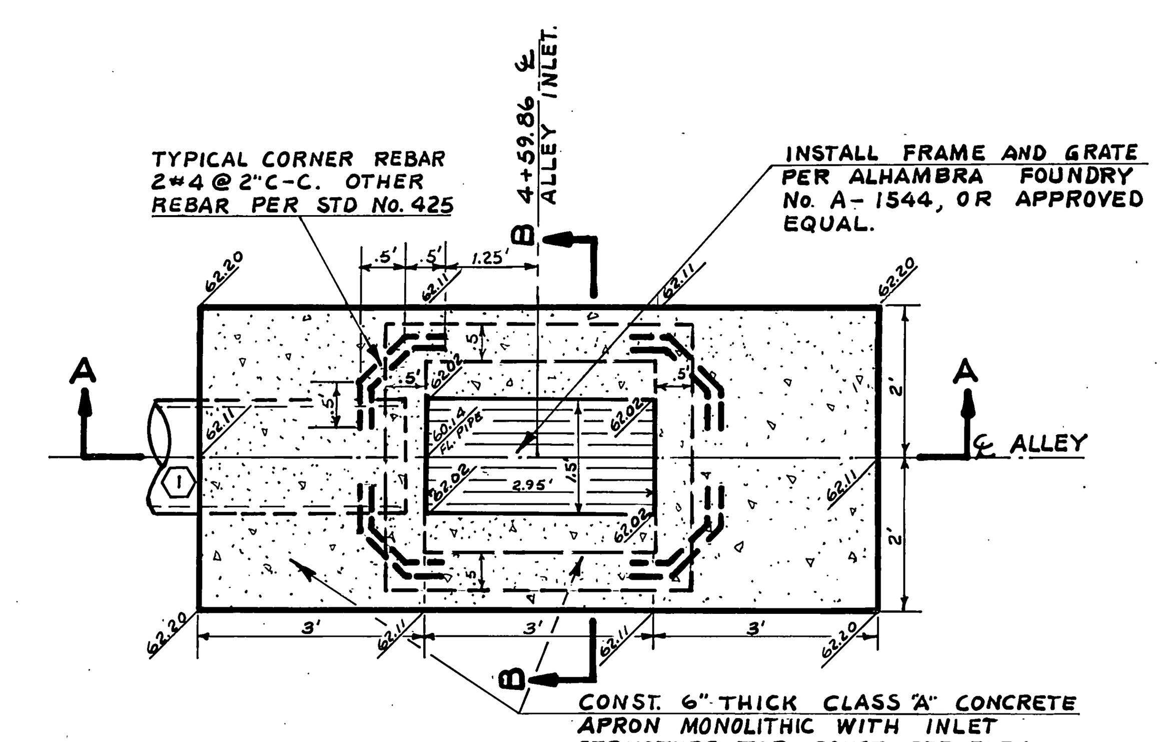

ALLEY INLET STRUCTURE

MODIFIED STD. 425
CLEANOUT BOX AND
CONCRETE APRON
STATION 4+59.86
SCALE 1"= 2'

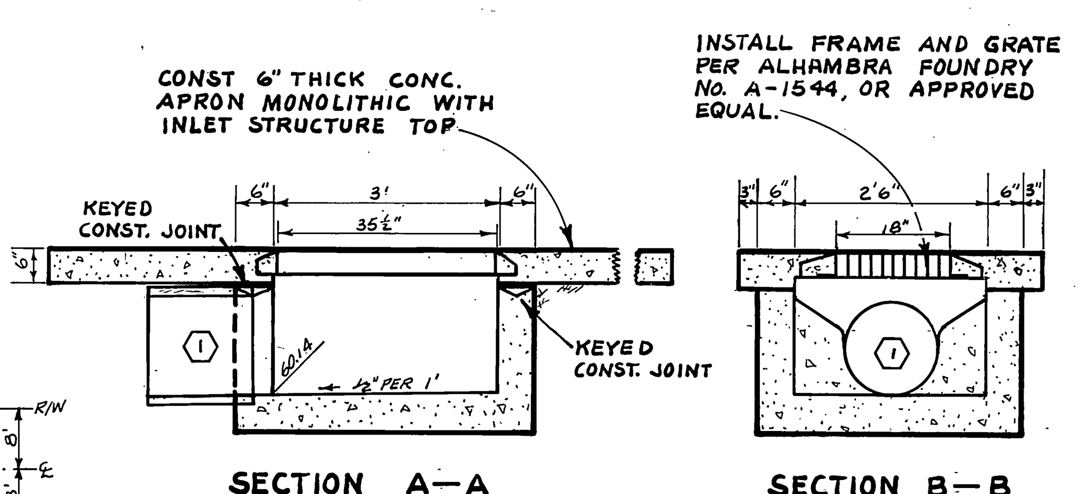

ALLEY INLET STRUCTURE

MODIFIED STD. 425
CLEANOUT BOX
STATION 4+59.86

SCALE 1"= 2'

MARK	REVISIONS	APPR.	DATE
1	ADDED 8" INLET AND CONNECTOR BE.	Wdg	2-28-68

DESIGNED BY BE DRAWN BY BE CHECKED BY ES

CITY OF RIVERSIDE, CALIFORNIA
DEPARTMENT OF PUBLIC WORKS

APPROVED BY	BY	DATE
OFFICE ENGINEER	JMK	10-20-67
PARK DEPARTMENT		
TRAFFIC DIVISION		
ASSISTANT CITY ENG.	Wdg	11/9

APPROVED BY [signature] DIRECTOR OF PUBLIC WORKS

DATE 11-8-67

THORNTON AVE. STORM DRAIN

EAST LA CADENA DR. TO BLENHEIM ST.

HORIZ. SCALE: 1" = 20' VERT. SCALE: 1" = 2'

PROJECT NO. 4028

D-152

SHEET 1 OF 1

FILE NO.