RIVERSIDE COUNTY FLOOD CONTROL AND WATER CONSERVATION DISTRICT

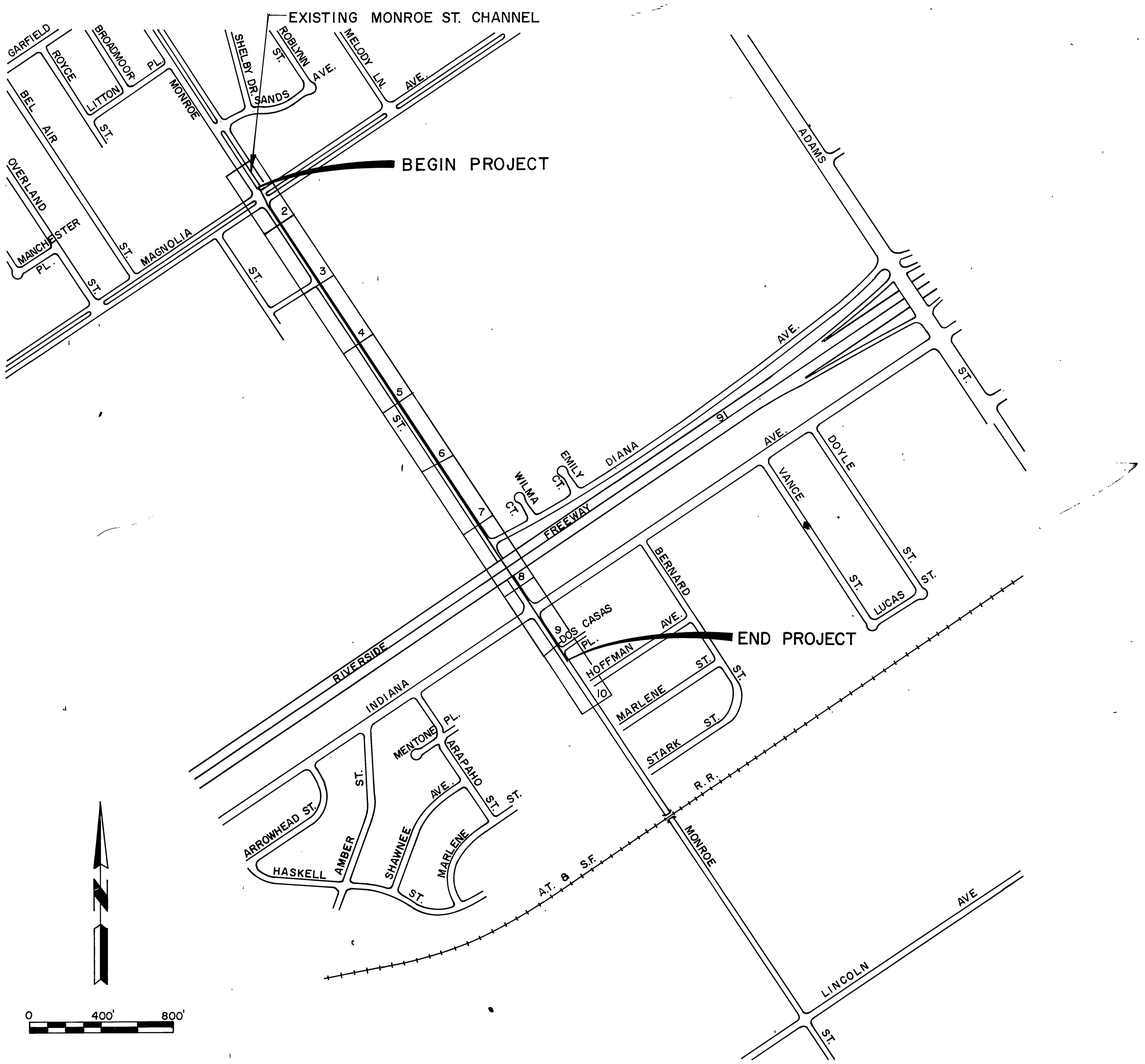

LOCATION MAP

GENERAL NOTES

1. JUNCTION STRUCTURE NO. 4 (PIPE) OR JUNCTION STRUCTURE NO. 3 (CHANNEL) SHALL BE CONSTRUCTED FOR JUNCTIONS NOT OTHERWISE SPECIFIED ON THE PLAN AND PROFILE.
2. TIES TO CATCH BASINS ARE FROM THE CURB RETURN TO THE CENTER LINE OF THE CATCH BASIN UNLESS OTHERWISE SHOWN. WHERE NO TIE IS SHOWN L.D. SHALL BEGIN AT THE CURB RETURN.
3. ALL OPENINGS RESULTING FROM CUTTING OR PARTIAL REMOVAL OF EXISTING CULVERTS, PIPES OR SIMILAR STRUCTURES TO BE ABANDONED SHALL BE SEALED WITH 6" OF CLASS "B" CONCRETE, NOTED ON THE DRAWINGS AS "PLUG".
4. STREET RESURFACING SHALL BE 3" AC. ON 6" CLASS 3 A.B. UNLESS OTHERWISE NOTED.
5. ALL RESURFACING, CURBS, GUTTERS, SIDEWALKS, DRIVEWAYS AND OTHER EXISTING IMPROVEMENTS TO BE RECONSTRUCTED SHALL BE CONSTRUCTED AT THE SAME ELEVATION AND LOCATION AS THE EXISTING IMPROVEMENTS, UNLESS OTHERWISE NOTED.
6. "V_i" IS THE DEPTH OF INLET PIPE OF CATCH BASINS IN SERIES MEASURED FROM TOP OF CURB TO INVERT OF CONNECTOR PIPE.

INDEX

	SHEET NO.
TITLE SHEET	1
MAIN LINE PLAN AND PROFILE SHEETS	2-10
CONNECTOR PIPE PROFILES	11-12
STRUCTURAL DETAILS	13-14
MISCELLANEOUS DETAILS	15
SEWER RECONSTRUCTION DETAIL	16
TRAFFIC DETAILS	17
TRAFFIC SIGNAL DETAILS	18

R.C.F.C. & W.C.D. STANDARD DRAWINGS

CB100	CATCH BASIN NO. 1	19
CB103	CATCH BASIN FRAME AND COVER (MANHOLE)	20
CB105	CATCH BASIN DETAIL OF OPENING	21
CB110	CONCRETE DROP INLET	22
LD201	LOCAL DEPRESSION NO. 2	23
JS227	JUNCTION STRUCTURE NO. 2	24-25
JS228	JUNCTION STRUCTURE NO. 3	26
JS229	JUNCTION STRUCTURE NO. 4	27
MH252	MANHOLE NO. 2	28
MH253	MANHOLE NO. 3	29
MH254	MANHOLE NO. 4	30-31
MH255	MANHOLE FRAME AND COVER (NON-ROCKING)	32
MH257	MANHOLE SHAFT	33
MH259	STANDARD DROP STEP	34
TS301	TRANSITION STRUCTURE NO. 1	35
TS303	TRANSITION STRUCTURE NO. 3	36
JS 226	JUNCTION STRUCTURE NO. 1.	37
M803	CONCRETE COLLAR FOR PIPES	38
M807	SANITARY SEWER PROTECTION	39
M808	REMODELING DETAILS HOUSE CONNECTION SEWERS	40-41
M813	CURB AND GUTTER	42
M814	ABBREVIATIONS AND SYMBOLS	43
M815	BEDDING AND PAY LINES	44
M816	CONCRETE BULKHEAD	45

CITY OF RIVERSIDE STANDARD DRAWINGS

304	WHEELCHAIR RAMPS	46-47
452	STANDARD PIPE BEDDINGS (STORM DRAINS & SEWERS)	48-49
453	TRENCH BACKFILL	50-51
500	PRECAST CONCRETE SEWER MANHOLE	52
504	DROP MANHOLE (FOR TRUNK SEWERS)	53
505	BRICK SEWER MANHOLE	54
606	TRAFFIC SIGNAL PULLBOX	55
900	CHAIN LINK FENCE	56
540	MANHOLE CASTINGS	57

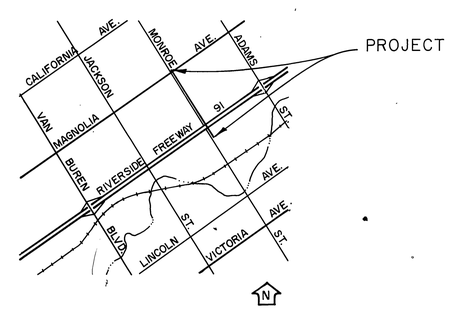

VICINITY MAP
NO SCALE

REVISIONS			
REF.	DESCRIPTION	APPR.	DATE

RIVERSIDE COUNTY FLOOD CONTROL AND WATER CONSERVATION DISTRICT

DESIGNED BY: A.G.K.
DRAWN BY: S. Moody
DATE DRAWN:
CHECKED BY:
APPROVED BY: John W. Bay Jr.
CHIEF ENGINEER R.E. NO. 8822
DATE: 11-3-76

MONROE STORM DRAIN
STAGE I
TITLE SHEET

1970 STORM DRAIN BOND ISSUE PROJECT NO. 17

INDEX 6F
PROJECT NO. 1-0-071
DRAWING NO. 1-313
SHEET NO. 1 OF 57

AS BUILT

D-352

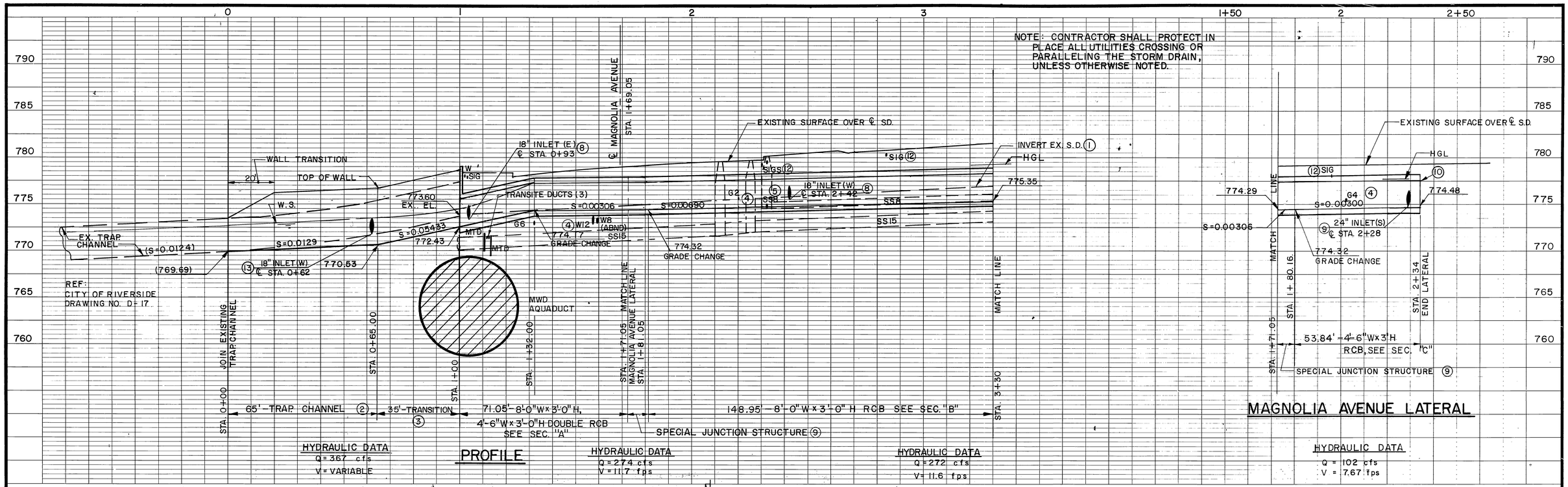
NOTE: CONTRACTOR SHALL PROTECT IN PLACE ALL UTILITIES CROSSING OR PARALLELING THE STORM DRAIN, UNLESS OTHERWISE NOTED.
EXISTING SURFACE OVER ℄ SD.
INVERT EX. S.D. (1)
HGL
775.35
18" INLET (E) (6)
℄ STA. 0+93
℄ MAGNOLIA AVENUE
STA. 1+69.05
WALL TRANSITION
TOP OF WALL
20'
W.S.
773.60
EX. EL.
TRANSITE DUCTS (3)
S=0.00306
S=0.00690
S=0.05433
S=0.0129
S=0.0124
EX. TRAP CHANNEL
(769.69)
770.53
18" INLET (W) (13)
℄ STA. 0+62
774.7
GRADE CHANGE
774.32
GRADE CHANGE
18" INLET (W) (8)
℄ STA. 2+42
SS8
SS15
SIG (12)
REF:
CITY OF RIVERSIDE
DRAWING NO. D-17
JOIN EXISTING TRAP CHANNEL
STA. 0+00
STA. 0+66.00
STA. 1+00
STA. 1+32.00
MWD AQUADUCT
STA. 1+71.05 MATCH LINE
MAGNOLIA AVENUE LATERAL
STA. 1+81.05
MATCH LINE
STA. 3+30
65'-TRAP. CHANNEL (2)
35'-TRANSITION (3)
71.05'-8'-0"W x 3'-0"H, 4'-6"W x 3'-0"H DOUBLE RCB SEE SEC. "A"
148.95'-8'-0"W x 3'-0" H RCB SEE SEC. "B"
SPECIAL JUNCTION STRUCTURE (9)
HYDRAULIC DATA
Q = 367 cfs
V = VARIABLE
PROFILE
HYDRAULIC DATA
Q = 274 cfs
V = 11.7 fps
HYDRAULIC DATA
Q = 272 cfs
V = 11.6 fps
EXISTING SURFACE OVER ℄ S.D.
HGL
(12) SIG
(10)
774.29
774.48
G4 (4)
S=0.00300
S=0.00306
24" INLET(S) (9)
℄ STA. 2+28
774.32
GRADE CHANGE
MATCH LINE
STA. 1+80.16
STA. 2+34 END LATERAL
STA. 1+71.05
53.84'-4'-6"W x 3'H
RCB, SEE SEC. "C"
SPECIAL JUNCTION STRUCTURE (9)
MAGNOLIA AVENUE LATERAL
HYDRAULIC DATA
Q = 102 cfs
V = 7.67 fps
MONROE
AVENUE
MAGNOLIA
STREET
M.W.D.
48" TREE
E.C.
P.T. 1°25'57" LT.
STA. 2+20
J.S. NO. 1
STA. 2+42
P.T. 1°25'57" RT.
STA. 2+00
J.S. NO. 1
STA. 0+93
CHAIN LINK FENCE
DETAIL SHEET NO. 15
℄ 8'W x 3'H RCB CROSSING MAGNOLIA
C.P. 305
2.05'
17.94'
16.5'
16'
10'
40'
65'
19'
MATCH LINE
STA. 3+30
GAS METERS
℄ CURVE DATA (A)
Δ = 90°01'00"
R = 30'
L = 47.13'
T = 30.01'
BC = 1+71.05
EC = 2+18.18
PLAN
1" = 20'
(1) REMOVE INTERFERING PORTIONS OF EX. S.D.
(2) REMOVE INTERFERING PORTIONS OF EX. TRAP CHANNEL. REPLACE WITH TRAP CHANNEL AT NEW GRADE. DETAIL SHEET NO. 13.
(3) TRANSITION, DETAIL SHEET NO. 13
(4) TO BE RELOCATED BY OTHERS.
(5) RELOCATE SS8 BELOW R.C.B, SEE DETAIL ON SHEET NO. 16
EXISTING SURFACE OVER S.D.
(1) EXISTING S.D.
771.90 TOP OF NORTH MTD.
771.45 TOP OF SOUTH MTD.
TRANSITE DUCTS (3)
8'W x 3'H, 4'-6"W x 3'H DOUBLE RCB
771.40 TOP OF M.T.D.
MTD'S
SECTION AT STA. 1+14
(6) C.B. NO. 1, W = 21', V = 5', 13'-24" RCP, CL. IV. A = MATCH NEW CURB & GUTTER. C.F. AT C.B. = 10" SEE PROFILE SHEET NO. 11.
(7) J.S. NO. 1, STA. 0+93, A = 30°, B = 18", C = 17'-6". J.S. NO. 1, STA. 2+42, A = 90°, B = 18", C = 5'-8".
(8) REMOVE INTERFERING PORTIONS OF SD18. CONNECT WITH 4'-18" RCP, CL. IV. SEE PROFILE SHEET NO. 11.
(9) SPECIAL JUNCTION STRUCTURE & JUNCTION STA. 2+28, DETAILS SHEET NO. 14.
(10) SEAL END WITH CONCRETE BULKHEAD.
(11) LANDSCAPING & IRRIGATION DETAIL SHEET NO. 15
(12) ABANDON SIG. SEE TRAFFIC SIG. DETAIL SHEET NO. 18.
(13) CONNECT EXISTING SD18. SEE PROFILE SHEET NO. 12.
(14) INTERSECTION OVERLAY & BUS BAY DETAIL SHEET NO. 15.
(15) REMOVE STREET LIGHT TEMPORARILY DURING CONSTRUCTION OF TRAP CHANNEL.
BENCH MARK C.P. 305
TOP OF 2 INCH I.P. EAST SIDE OF MAGNOLIA ON MONROE ST.
DOWN 0.16 EL. 779.319
SCALE:
DATE:
REVISIONS
No Change
REF. DESCRIPTION APPR. DATE
RIVERSIDE COUNTY FLOOD CONTROL AND WATER CONSERVATION DISTRICT
DESIGNED BY: A.G.K.
DRAWN BY: S. Moody
DATE DRAWN:
CHECKED BY:
APPROVED BY:
CHIEF ENGINEER R.E. NO. 8822
DATE: 11-3-76
MONROE STORM DRAIN
STAGE I
STA. 0+00 TO STA. 3+30
1970 STORM DRAIN BOND ISSUE PROJECT NO. 17
PROJECT NO. 1-0-071
DRAWING NO. 1-313
SHEET NO. 2 OF 57
AS BUILT
D-352

NOTE: CONTRACTOR SHALL PROTECT IN PLACE ALL UTILITIES CROSSING OR PARALLELING THE STORM DRAIN, UNLESS OTHERWISE NOTED.

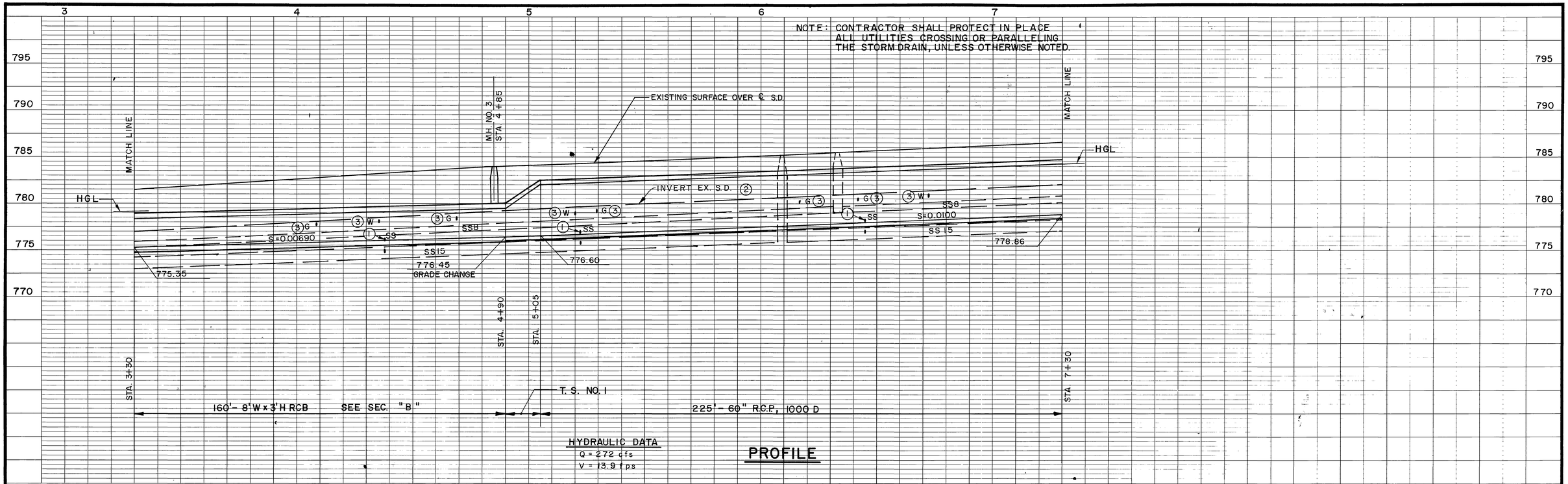

PROFILE

(1) REMODEL SEWER HOUSE CONNECTION, CASE E, L = 18'

(2) REMOVE INTERFERING PORTIONS OF EXISTING S.D.

(3) TO BE RELOCATED BY OTHERS.

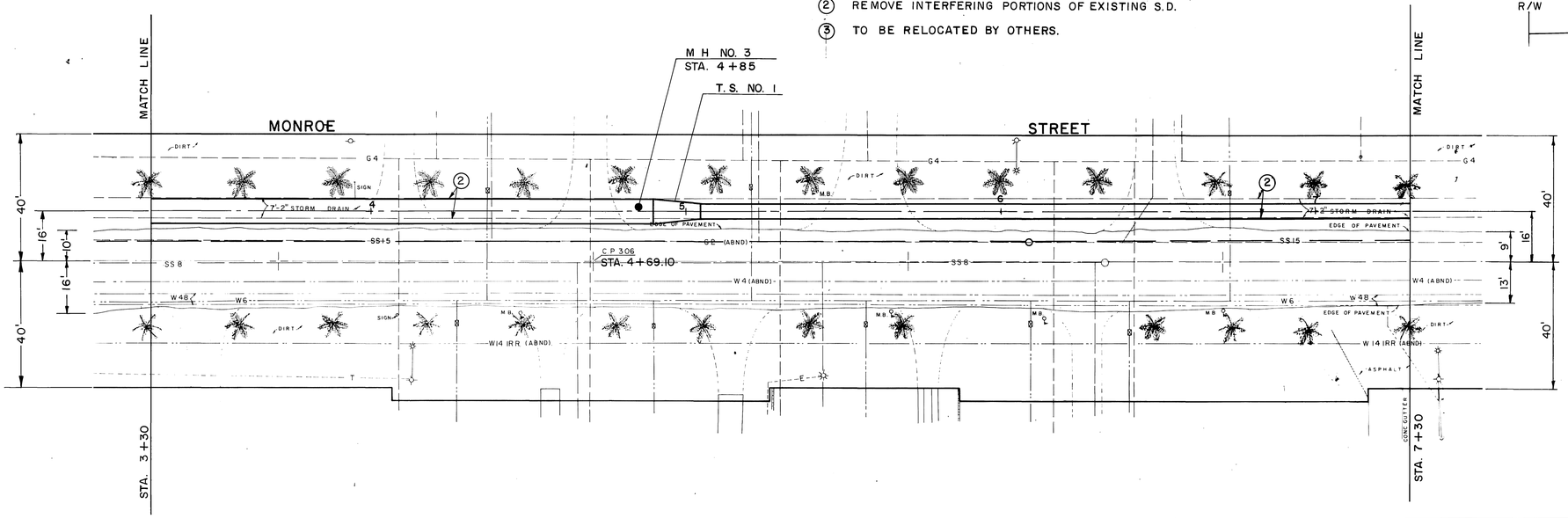

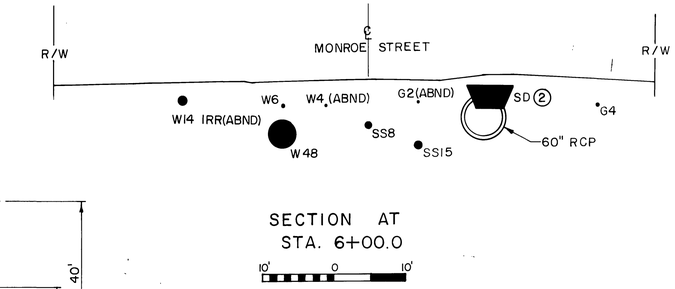

SECTION AT STA. 6+00.0

PLAN

1" = 20'

20' 0 20'

BENCH MARK C.P. 306 N & T ON THE MONROE ST. BASELINE AT STA. 3+00± EL. 783.681	REVISIONS	RIVERSIDE COUNTY FLOOD CONTROL AND WATER CONSERVATION DISTRICT	MONROE STORM DRAIN STAGE I STA. 3+30 TO STA. 7+30
SCALE:		DESIGNED BY: A.G.K. / DRAWN BY: / DATE DRAWN: / CHECKED BY:	APPROVED BY: / CHIEF ENGINEER R.E. NO. 8822 / DATE: 11-3-76
DATE:	REF. / DESCRIPTION / APPR. / DATE: No Change		1970 STORM DRAIN BOND ISSUE PROJECT NO. 17

PROJECT NO. 1-0-071

DRAWING NO. 1-313

SHEET NO. 3 OF 57

AS BUILT

D-352

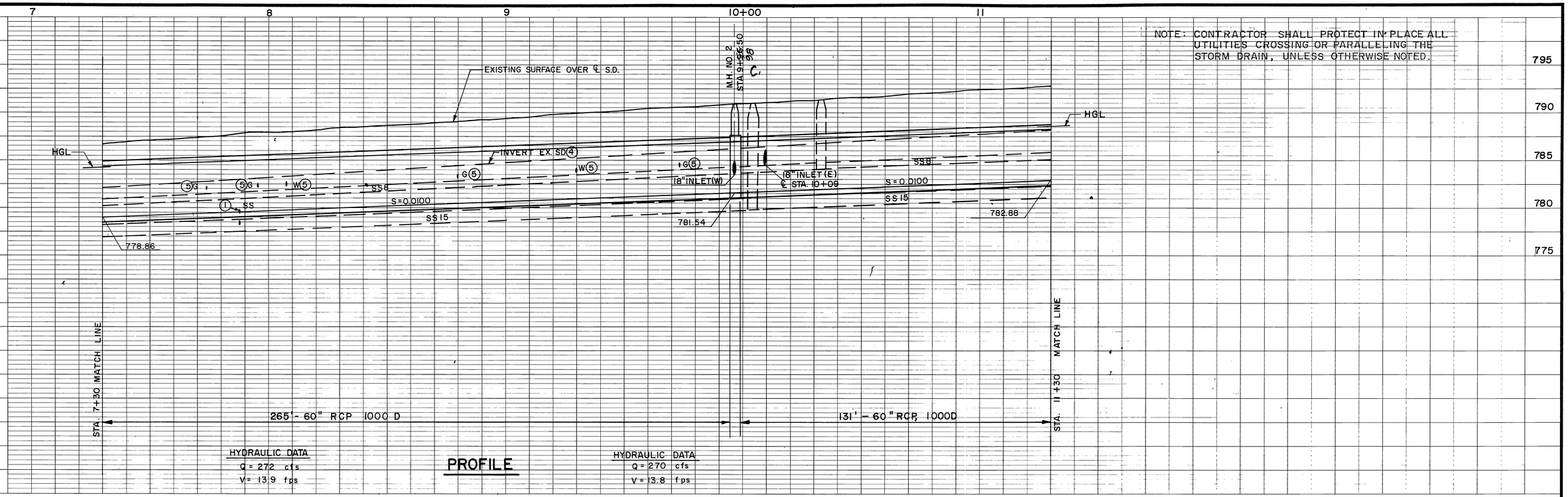

NOTE: CONTRACTOR SHALL PROTECT IN PLACE ALL UTILITIES CROSSING OR PARALLELING THE STORM DRAIN, UNLESS OTHERWISE NOTED.

1. REMODEL SEWER HOUSE CONNECTION, CASE E, L = 18'
2. CONCRETE DROP INLET, W = 3'-9", V=4', 4'-18" RCP, CL IV. SEE PROFILE SHEET NO. 11.
3. CONCRETE DROP INLET, W = 3'-9", V=3', 35'-18" RCP, CL. IV. SEE PROFILE SHEET NO. 11.
4. REMOVE INTERFERING PORTIONS OF EXISTING S.D.
5. TO BE RELOCATED BY OTHERS.
6. GRADE TO DRAIN.

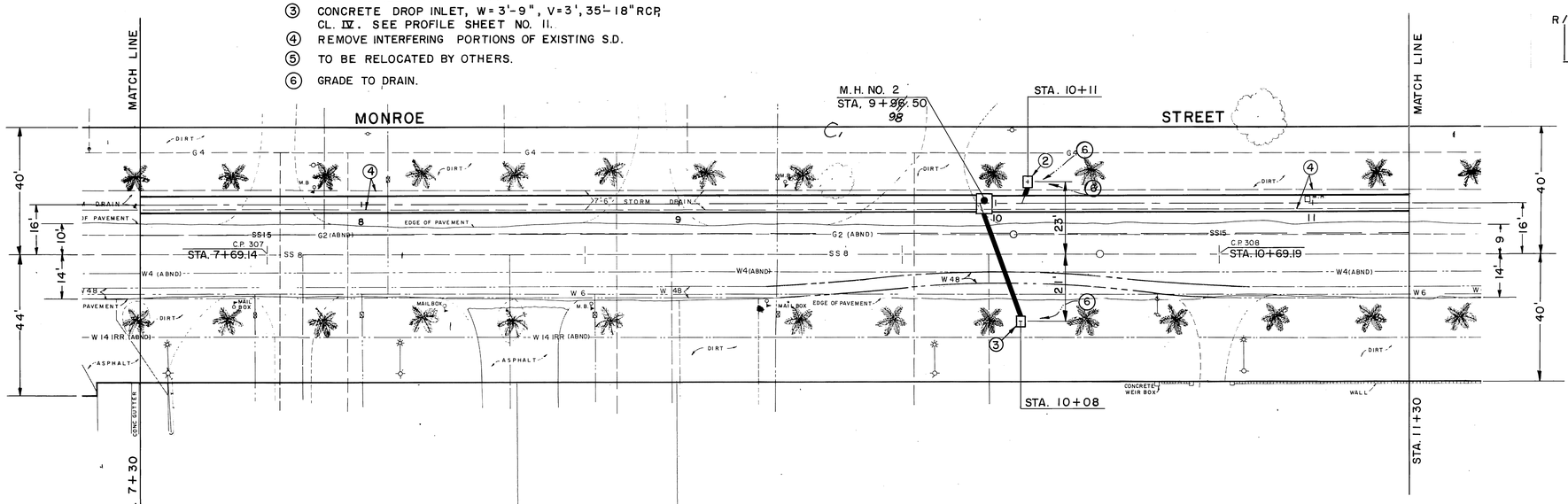

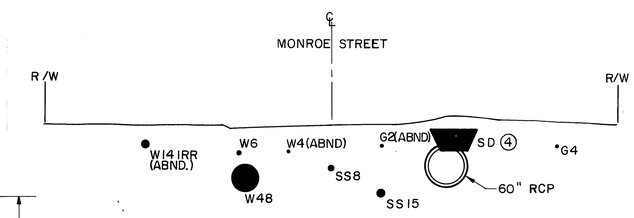

SECTION AT STA. 9+50.00

10' 0 10'

PLAN

1" = 20'

20' 0 20'

BENCH MARK CP 308	REVISIONS			
N & T ON THE MONROE ST. BASELINE AT STA. 9+00 ± EL. 790.634				
SCALE:				
DATE:	C.	M.H. No. 2 Sta. Change	WDW	1 Sep 77
	REF.	DESCRIPTION	APPR.	DATE

AS BUILT

RIVERSIDE COUNTY FLOOD CONTROL AND WATER CONSERVATION DISTRICT

DESIGNED BY: A.G.K.
DRAWN BY: S. Moody
DATE DRAWN:
CHECKED BY:
APPROVED BY: John H. Bryant
CHIEF ENGINEER R.E. NO. 8822
DATE: 11-3-76

MONROE STORM DRAIN

STAGE I

STA. 7+30 TO STA. 11+30

1970 STORM DRAIN BOND ISSUE PROJECT NO. 17

INDEX 6A

PROJECT NO. 1-0-071
DRAWING NO. 1-313
SHEET NO. 4 OF 57

D-352

NOTE: CONTRACTOR SHALL PROTECT IN PLACE ALL UTILITIES CROSSING OR PARALLELING THE STORM DRAIN, UNLESS OTHERWISE NOTED.

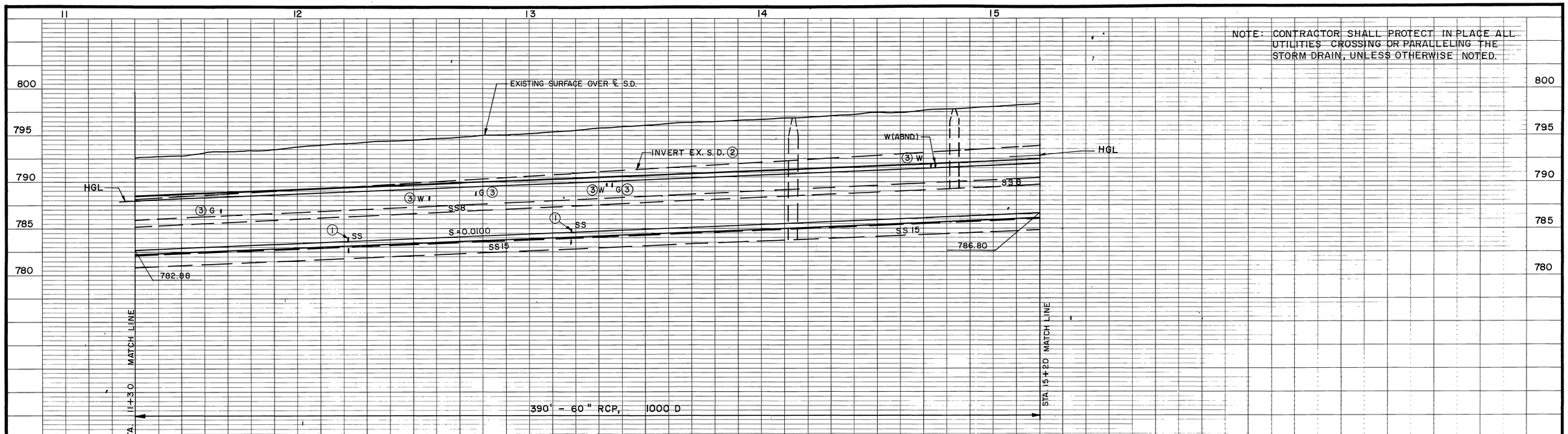

PROFILE

HYDRAULIC DATA
Q = 270 cfs
V = 13.8 fps

① REMODEL SEWER HOUSE CONNECTION, CASE E, L=18'
② REMOVE INTERFERING PORTIONS OF EXISTING S.D.
③ TO BE RELOCATED BY OTHERS.

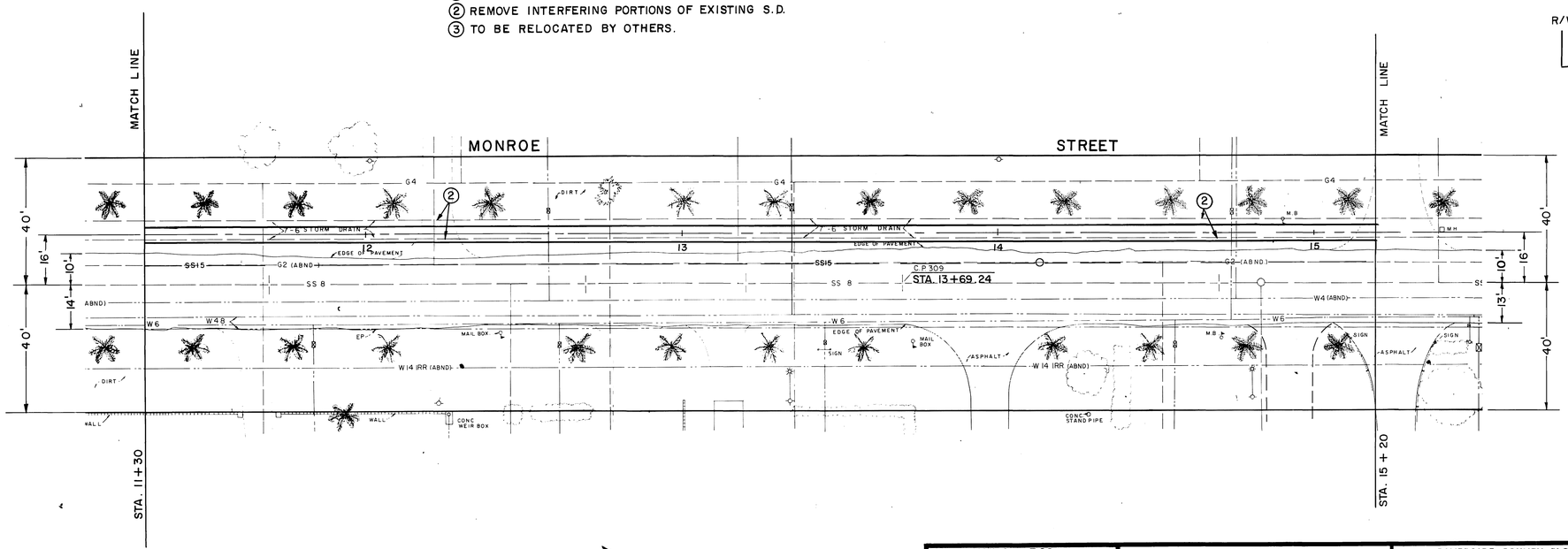

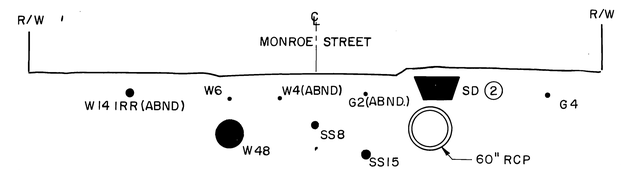

SECTION AT
STA. 13+50.00
10' 0 10'

PLAN

1"=20'

20' 0 20'

BENCH MARK C.P. 309 N&T ON THE MONROE ST. BASELINE AT STA. 12+00± EL. 795.396	REVISIONS	RIVERSIDE COUNTY FLOOD CONTROL AND WATER CONSERVATION DISTRICT	MONROE STORM DRAIN STAGE I STA. 11+30 TO STA. 15+20	PROJECT NO. 1-0-071
SCALE:	No Change	DESIGNED BY: AGK	APPROVED BY: John W. Bryant CHIEF ENGINEER R.E. NO. 8822	DRAWING NO. 1-313
DATE:	REF. DESCRIPTION APPR. DATE	DRAWN BY: S. Moody		SHEET NO. 5 OF 57
		DATE DRAWN:		
		CHECKED BY:	DATE: 11-3-76	1970 STORM DRAIN BOND ISSUE PROJECT NO. 17

INDEX UP

AS BUILT

D-352

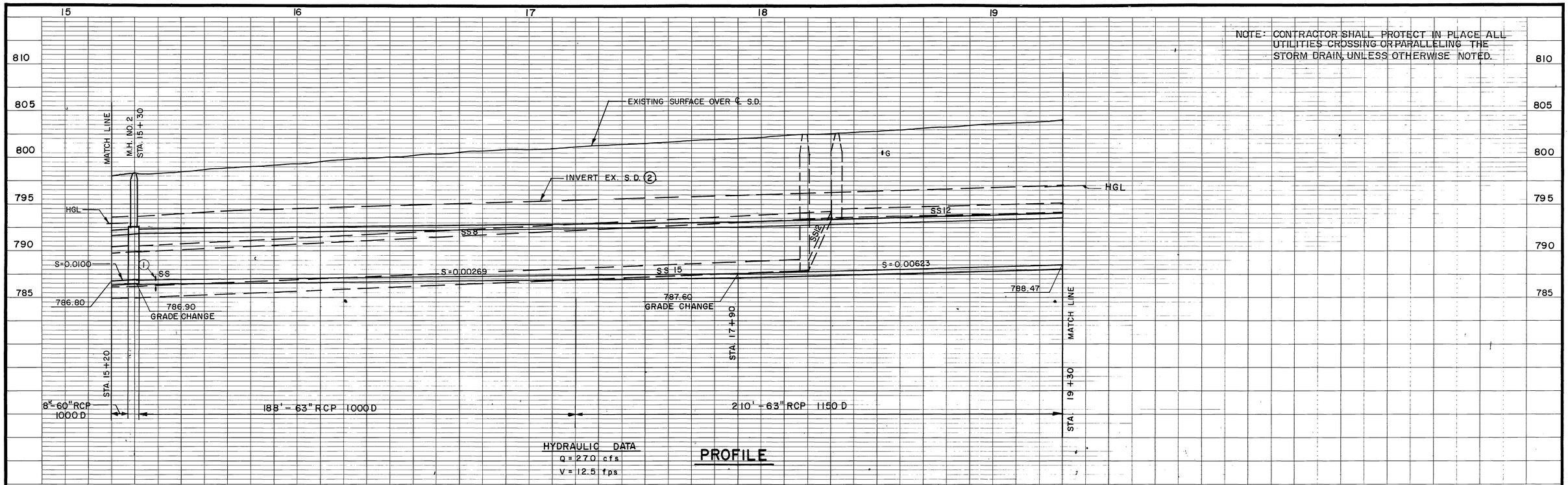

BENCH MARK C.P. 310 N & T ON THE MONROE ST. BASELINE AT STA. 15+00± EL. 800.534	REVISIONS	RIVERSIDE COUNTY FLOOD CONTROL AND WATER CONSERVATION DISTRICT	MONROE STORM DRAIN STAGE I STA. 15+20 TO STA. 19+30	PROJECT NO. 1-0-071
SCALE:	No Change	DESIGNED BY: AGK	1970 STORM DRAIN BOND ISSUE PROJECT NO. 17	DRAWING NO. 1-313
DATE:	REF. DESCRIPTION APPR. DATE	DRAWN BY: S. Moody		SHEET NO. 6 OF 57
		DATE DRAWN:		
		CHECKED BY:		
		APPROVED BY: John W. Bryant CHIEF ENGINEER R.E. NO. 8822 DATE: 11-3-76		

AS BUILT

D-352

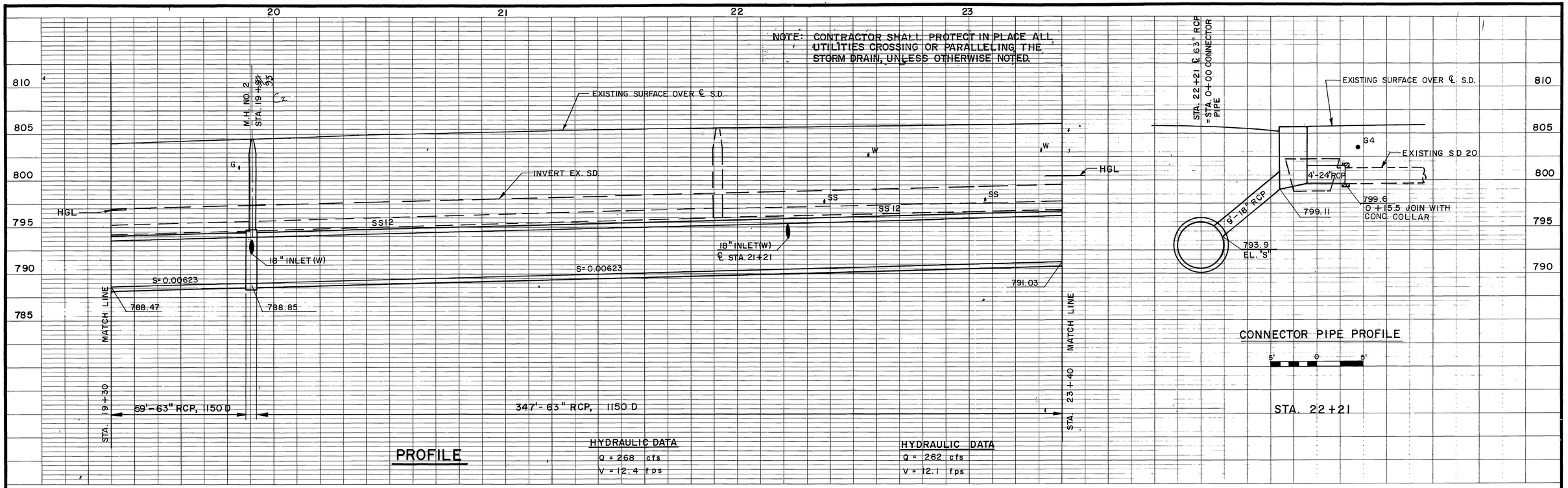

① C.B. NO. 1, W=7', V = 4', 34'- 18" RCP, CL. IV. SEE PROFILE SHEET NO. 11.
② C.B. NO. 1, W=7', V = 6.5', V_1 = 6', 9'-18" RCP CL. IV. SEE PROFILE THIS SHEET.
③ REMOVE INTERFERING PORTIONS OF EXISTING SD20. CONNECT TO REAR OF C.B. NO. 1 WITH 4'-24" RCP, CL. IV.

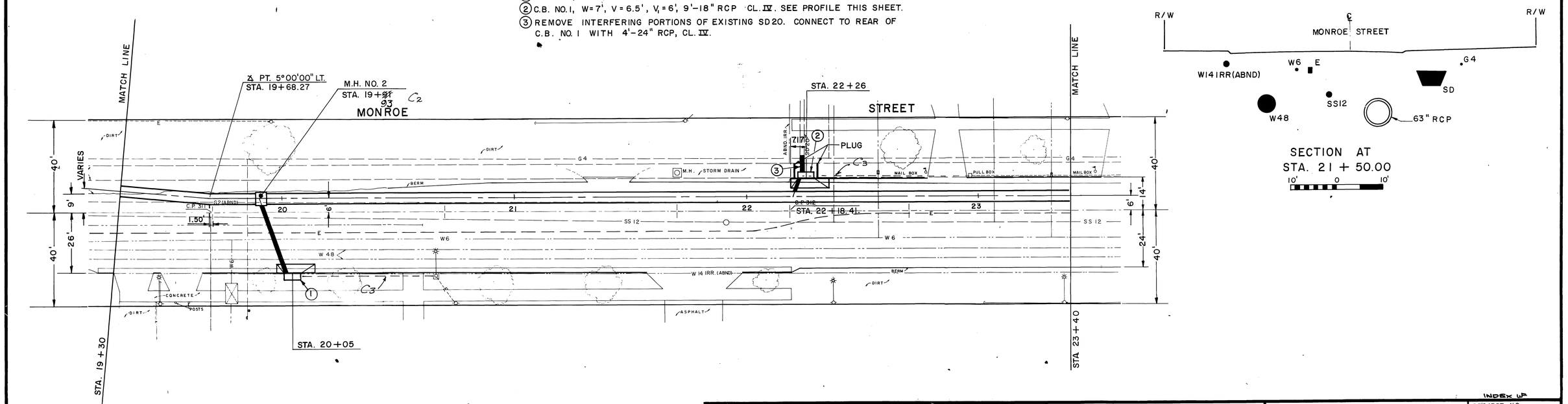

PLAN
1"=20'

BENCH MARK C.P. 312
TOP OF 3/4 INCH I.P. R.E. 9876 0.05 NORTHERLY OF BASELINE ON MONROE ST. AT STA. 20+48.60± EL. 805.684

DATE:

REVISIONS			
C3	Cut and Cap S.L. Conduit	WDG	1 Aug 77
C2	Sta. Change	WDG	1 Aug 77
REF.	DESCRIPTION	APPR.	DATE

RIVERSIDE COUNTY FLOOD CONTROL AND WATER CONSERVATION DISTRICT

DESIGNED BY: AGK
DRAWN BY: S. Moody
DATE DRAWN:
CHECKED BY:
APPROVED BY: John W. Bryant
CHIEF ENGINEER R.E. NO. 8822
DATE: 11-3-76

MONROE STORM DRAIN
STAGE I
STA. 19+30 TO STA. 23+40
1970 STORM DRAIN BOND ISSUE PROJECT NO. 17

INDEX UP
PROJECT NO. 1-0-071
DRAWING NO. 1-313
SHEET NO. 7 OF 57

AS BUILT

D-352

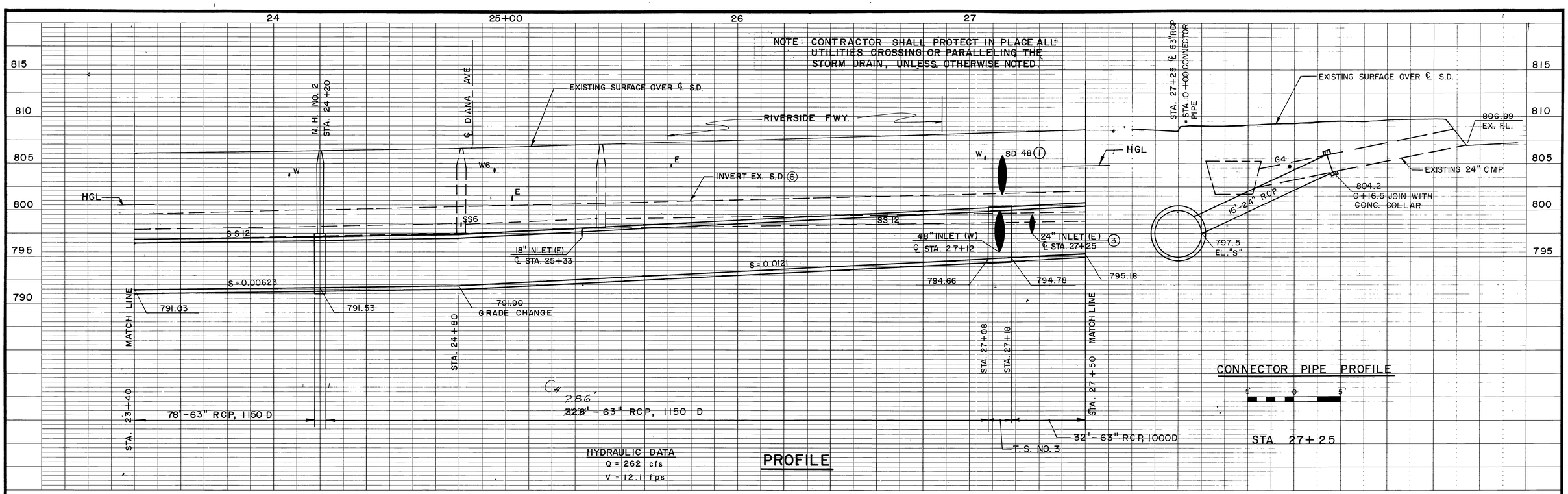

BENCH MARK C.P. 313 N&T ON THE MONROE ST. BASLINE AT STA. 23+00 ± EL. 806.440	REVISIONS	RIVERSIDE COUNTY FLOOD CONTROL AND WATER CONSERVATION DISTRICT	MONROE STORM DRAIN STAGE I STA. 23+40 TO STA. 27+50	INDEX UF
SCALE:		DESIGNED BY: A.G.K.		PROJECT NO. 1-0-071
		DRAWN BY: S. Moody		DRAWING NO. 1-313
DATE:	C4 Length of 63" RCP Change	DATE DRAWN:		SHEET NO. 8 OF 57
	REF. DESCRIPTION APPR. DATE	CHECKED BY:	1970 STORM DRAIN BOND ISSUE PROJECT NO. 17	

APPROVED BY: John W. Bryant, CHIEF ENGINEER R.E. NO. 8822, DATE: 11-3-76

AS BUILT

D-352

NOTE: CONTRACTOR SHALL PROTECT IN PLACE ALL UTILITIES CROSSING OR PARALLELING THE STORM DRAIN, UNLESS OTHERWISE NOTED.

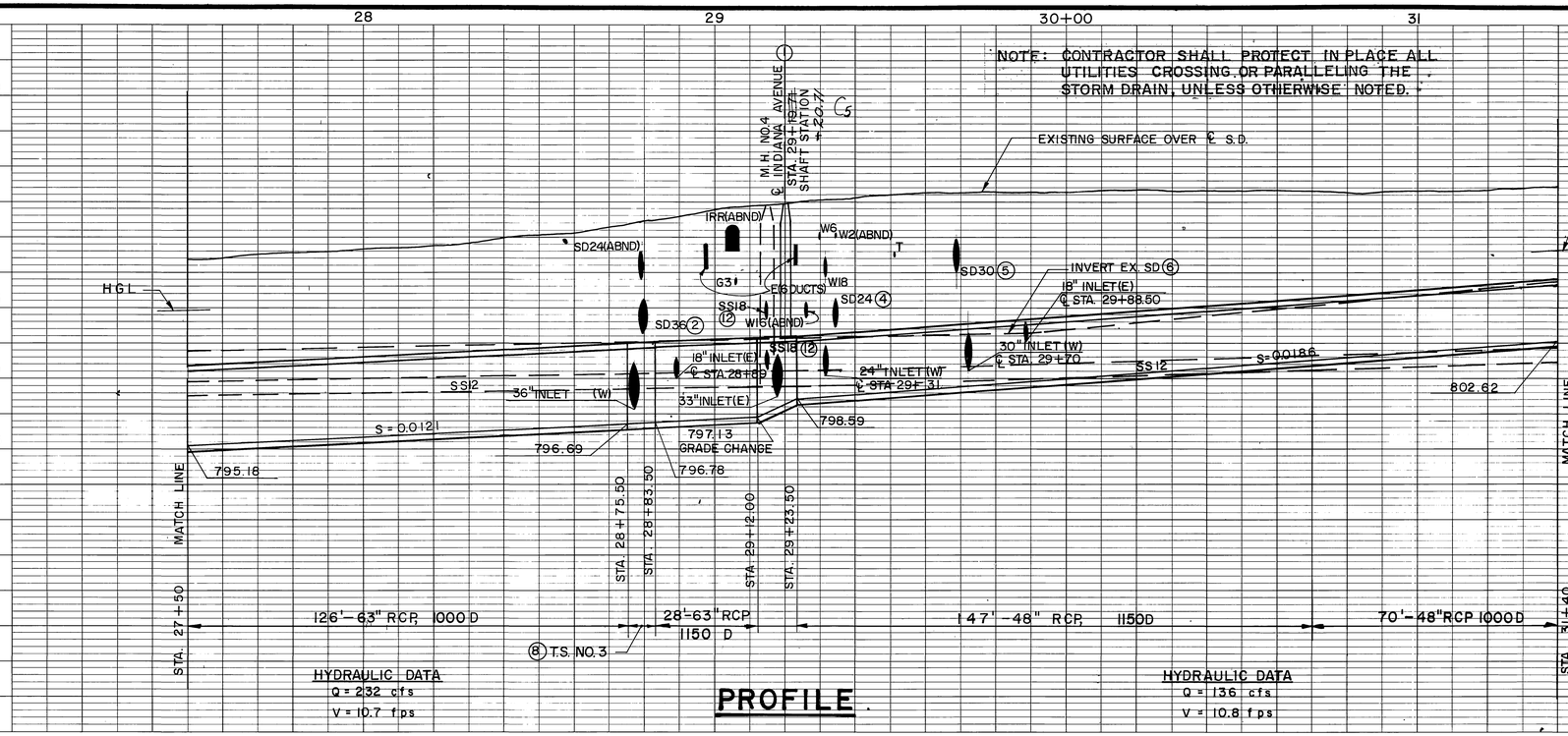

PROFILE

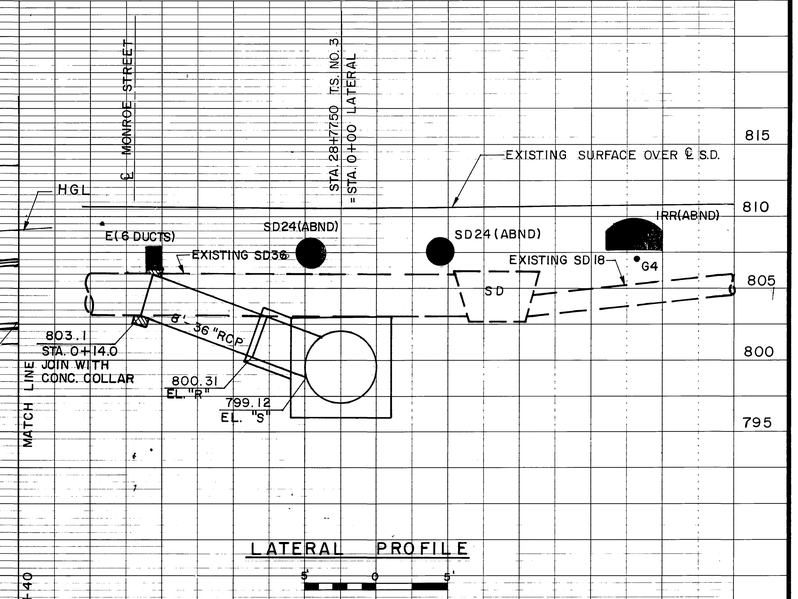

LATERAL PROFILE

STA. 28+77.50

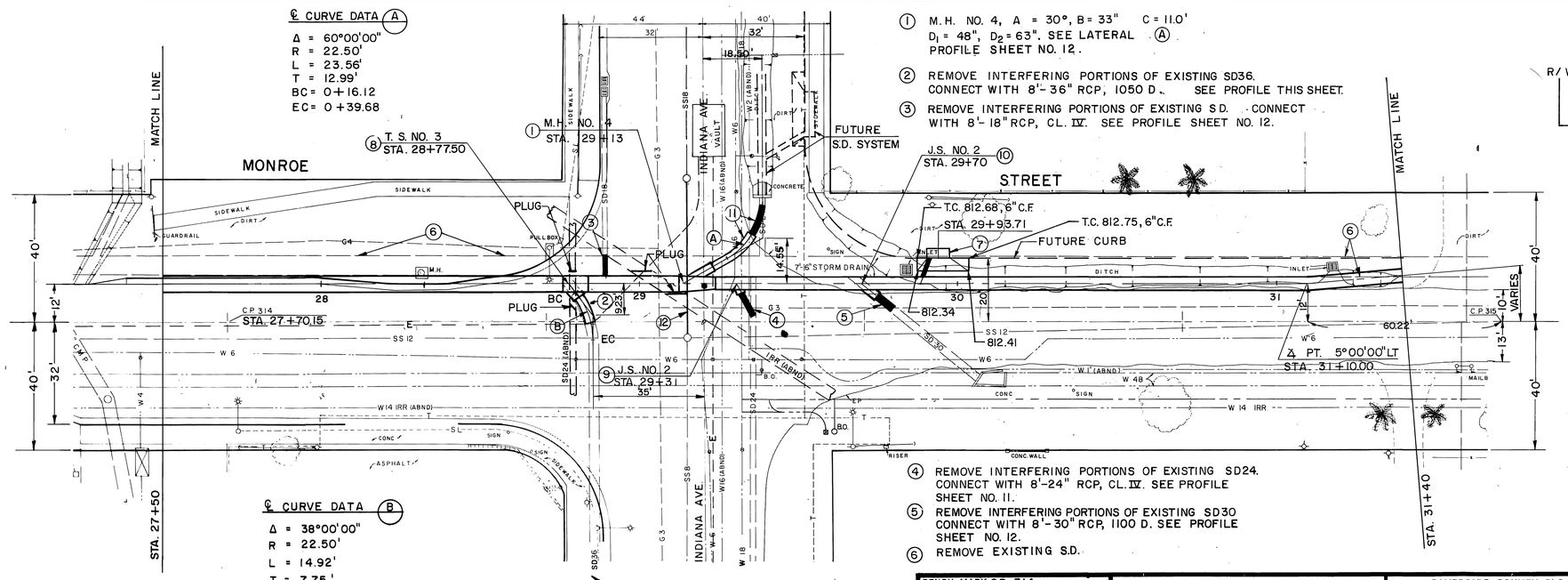

PLAN

1" = 20'

(1) M.H. NO. 4, A = 30°, B = 33" C = 11.0'
D_1 = 48", D_2 = 63". SEE LATERAL PROFILE SHEET NO. 12. (A)

(2) REMOVE INTERFERING PORTIONS OF EXISTING SD36. CONNECT WITH 8'-36" RCP, 1050 D. SEE PROFILE THIS SHEET.

(3) REMOVE INTERFERING PORTIONS OF EXISTING S.D. CONNECT WITH 8'-18" RCP, CL. IV. SEE PROFILE SHEET NO. 12.

(4) REMOVE INTERFERING PORTIONS OF EXISTING SD24. CONNECT WITH 8'-24" RCP, CL. IV. SEE PROFILE SHEET NO. 11.

(5) REMOVE INTERFERING PORTIONS OF EXISTING SD30 CONNECT WITH 8'-30" RCP, 1100 D. SEE PROFILE SHEET NO. 12.

(6) REMOVE EXISTING S.D.

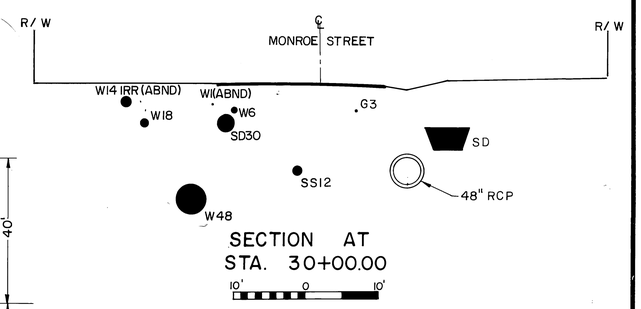

SECTION AT STA. 30+00.00

(7) C.B. NO. 1, W = 7', V = 4', 10'-18" RCP, CL. IV SEE PROFILE SHEET NO. 12.

(8) T.S. NO. 3, A = 52°, B = 36", C = 7.0'
D_1 = D_2 = 63"

(9) J.S. NO. 2, A = 60°, B = 24", C = 4.5', D = 48"
E = 3.0', F = 1.2', G = 1.8', L = 3.3'

(10) J.S. NO. 2, A = 40°, B = 30", C = 6.8', D = 48"
E = 5.5', F = 1.4', G = 1.4', L = 5.5'

(11) REALIGN EXISTING SD 24 TO DRAIN INTO NEW 33" RCP. SEE PROFILE SHEET NO. 12.

(12) SEWER RECONSTRUCTION. SEE DETAIL SHEET NO. 16.

BENCH MARK CP 314
N & T ON THE MONROE ST. BASELINE AT STA. 26+00±
EL. 808.738

SCALE:

DATE:

REVISIONS			
C5	Sta. Change	WDG	1-14-77
REF.	DESCRIPTION	APPR.	DATE

RIVERSIDE COUNTY FLOOD CONTROL AND WATER CONSERVATION DISTRICT

DESIGNED BY: A.G.K.
DRAWN BY: S. Moody
DATE DRAWN:
CHECKED BY:

APPROVED BY: John N. Bryant
CHIEF ENGINEER-R.E. NO. 8822
DATE: 11-3-76

MONROE STORM DRAIN
STAGE I

STA. 27+50 TO STA. 31+40

1970 STORM DRAIN BOND ISSUE PROJECT NO. 17

INDEX 68

PROJECT NO. 1-0-071
DRAWING NO. 1-313
SHEET NO. 9 OF 57

AS BUILT

D-352

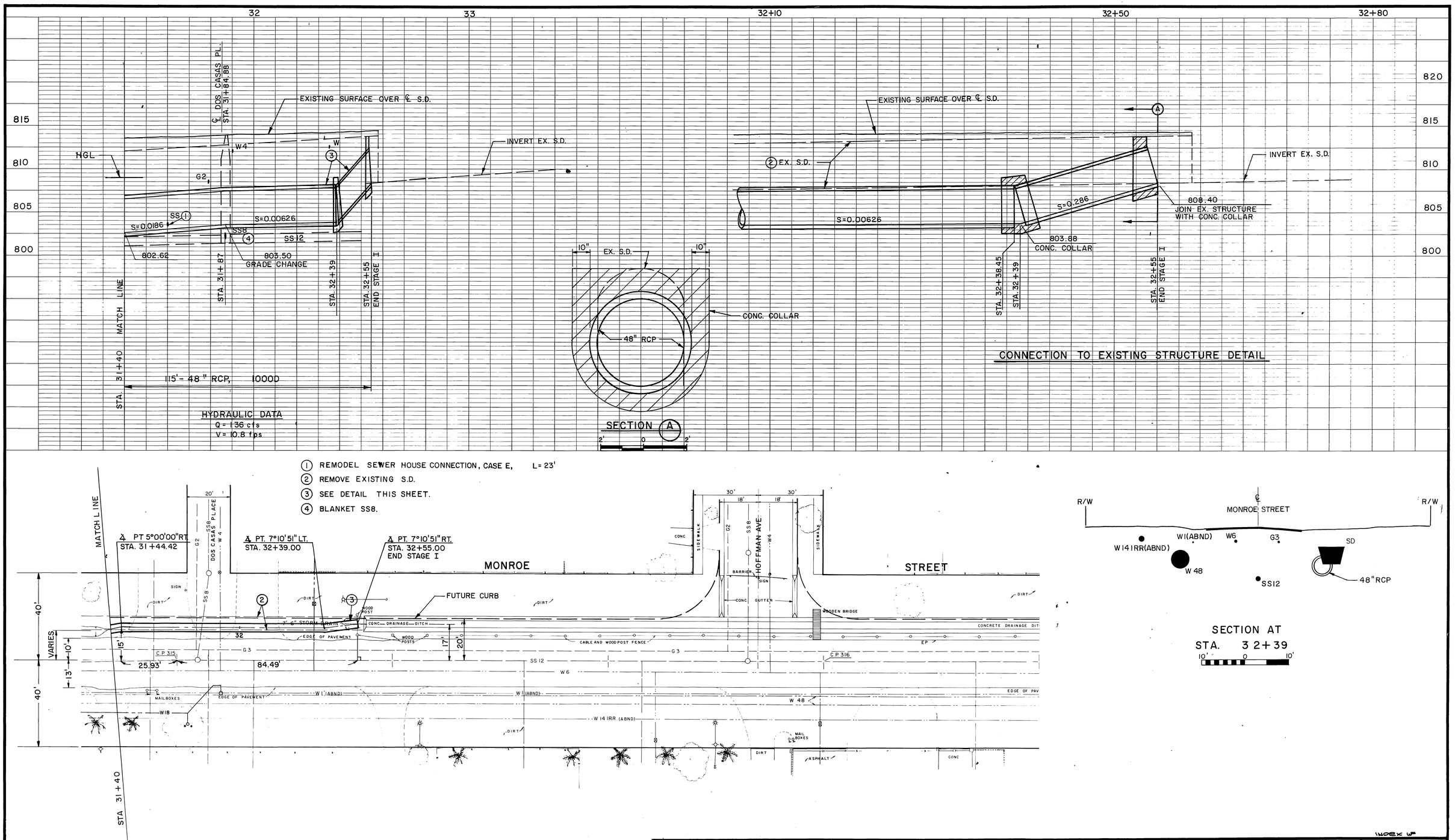

BENCH MARK CP 316 N & T ON THE MONROE ST BASELINE AT STA. 33+00± EL. 815.706	REVISIONS	RIVERSIDE COUNTY FLOOD CONTROL AND WATER CONSERVATION DISTRICT	MONROE STORM DRAIN STAGE I STA. 31+40 TO STA. 32+55
SCALE:		DESIGNED BY: AGK DRAWN BY: S. Moody DATE DRAWN:	APPROVED BY: John N. Bryant CHIEF ENGINEER R.E. NO. 8822 DATE: 11-1-76
DATE:	No Change REF. DESCRIPTION APPR. DATE	CHECKED BY:	1970 STORM DRAIN BOND ISSUE PROJECT NO. 17

INDEX 4

PROJECT NO. 1-0-071

DRAWING NO. 1-313

SHEET NO. 10 OF 57

AS BUILT

D-352

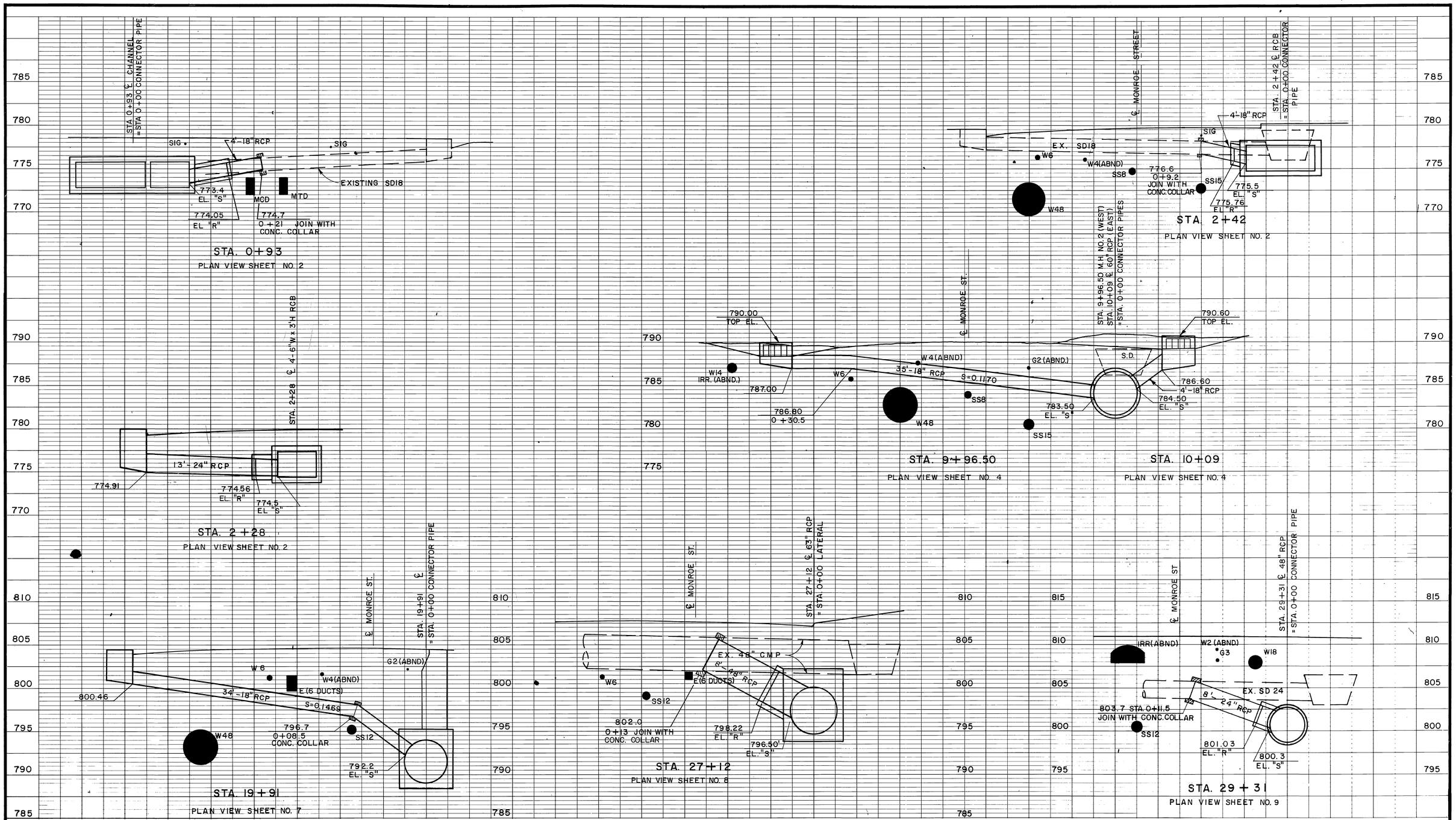

INDEX 5

REVISIONS			
REF.	DESCRIPTION	APPR.	DATE
	No Change		

AS BUILT

RIVERSIDE COUNTY FLOOD CONTROL AND WATER CONSERVATION DISTRICT

DESIGNED BY: AGK
DRAWN BY: S. Moody
DATE DRAWN:
CHECKED BY:
APPROVED BY: John W. Bryant
CHIEF ENGINEER R.E. NO. 8822
DATE: 11-3-76

MONROE STORM DRAIN
STAGE I
CONNECTOR PIPE PROFILES
1970 STORM DRAIN BOND ISSUE PROJECT NO. 17

PROJECT NO. 1-0-071
DRAWING NO. 1-313
SHEET NO. 11 OF 57

D-352

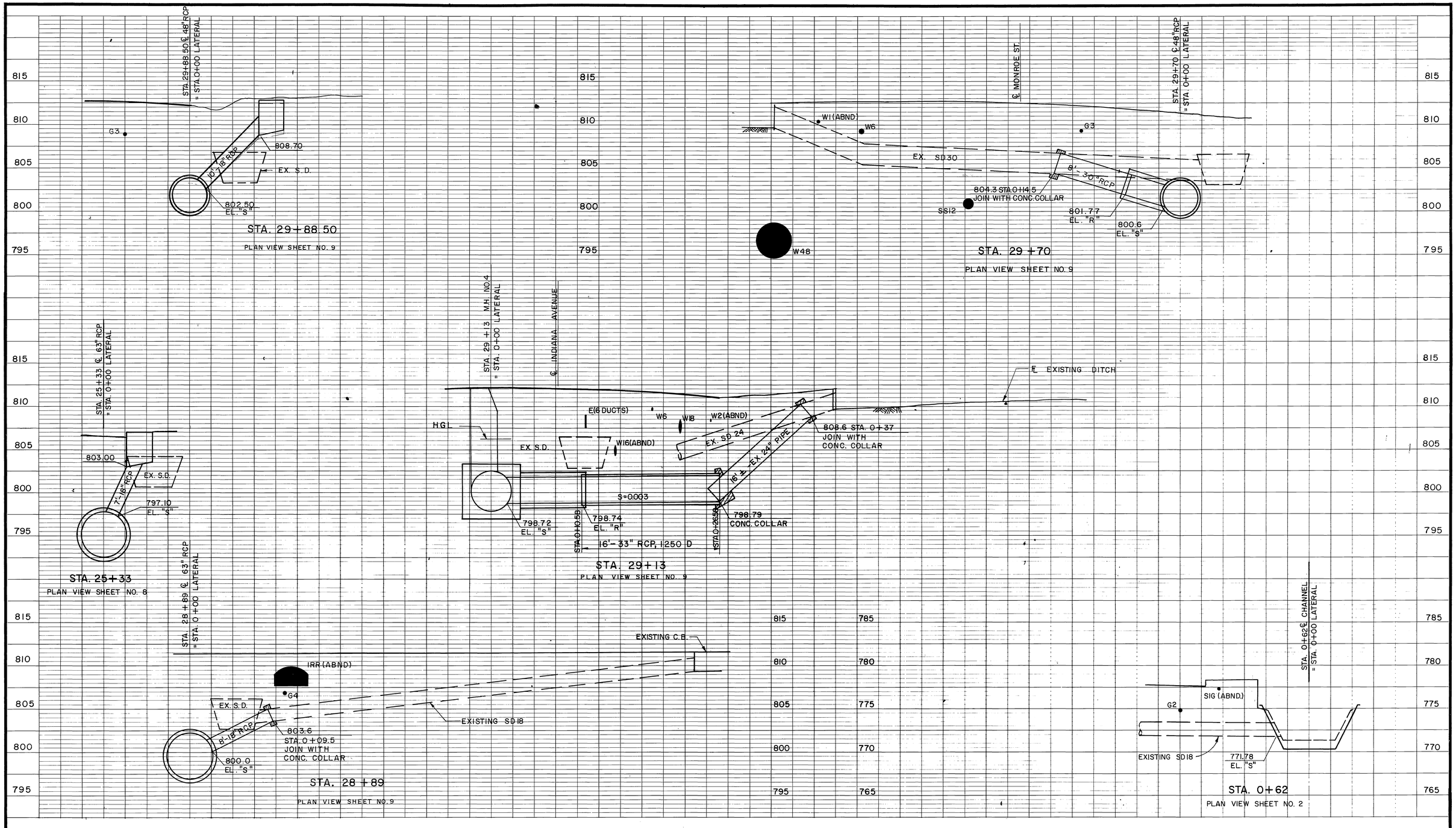

REVISIONS			
REF.	DESCRIPTION	APPR.	DATE
	No Change		

AS BUILT

RIVERSIDE COUNTY FLOOD CONTROL AND WATER CONSERVATION DISTRICT

DESIGNED BY: AGK
DRAWN BY: J. Moody
DATE DRAWN:
CHECKED BY:
APPROVED BY: John W. Bryant
CHIEF ENGINEER R.E. NO. 8822
DATE: 11-3-76

MONROE STORM DRAIN
STAGE I
CONNECTOR PIPE PROFILES
1970 STORM DRAIN BOND ISSUE PROJECT NO. 17

INDEX OF

PROJECT NO. 1-0-071
DRAWING NO. 1-313
SHEET NO. 12 OF 57

D-352

C6 3'-0"

DETAIL SCHEDULE				
BOX SECTION		A	B	C
DESIGN COVER		1'-0"	1' TO 4'	1'-0"
A BAR	BAR NO. & SPACING	5@8	6@9	5@10
	HORIZ. LENGTH	2'-4"	2'-8"	1'-9"
	VERT. LENGTH	3'-0"	3'-0"	3'-4"
B BAR	BAR NO. & SPACING	4@8	5@9	4@10
	HORIZ. LENGTH	2'-0"	2'-2"	1'-3"
	VERT. LENGTH	2'-7"	3'-0"	2'-7"
C BAR	BAR NO. & SPACING	5@10	—	—
	HORIZ. LENGTH	1'-6"	—	—
	VERT. LENGTH	3'-0"	—	—
D BAR	BAR NO. & SPACING	4@10	—	—
	HORIZ. LENGTH	1'-0"	—	—
	VERT. LENGTH	2'-7"	—	—
E BAR	BAR NO. & SPACING	5@10	—	—
	HORIZ. LENGTH	2'-0"	—	—
	VERT. LENGTH	3'-0"	—	—
F BAR	BAR NO. & SPACING	4@10	—	—
	HORIZ. LENGTH	4'-8"	—	—
	VERT. LENGTH	2'-7"	—	—
G BAR	BAR NO. & SPACING	5@10	—	—
	HORIZ. LENGTH	6'-6"	—	—
H BAR	BAR NO. & SPACING	5@10	—	—
	HORIZ. LENGTH	5'-7"	—	—
I BAR	BAR NO. & SPACING	4@8	5@9	—
	HORIZ. LENGTH	4'-8"	6'-7"	—
J BAR	BAR NO. & SPACING	5@8	5@9	6@10
	HORIZ. LENGTH	14'-3"	6'-7"	5'-7"
K BAR	BAR NO. & SPACING	4@12	4@9	—
	HORIZ. LENGTH	5'-9"	7'-2"	—
L BAR	BAR NO. & SPACING	4@12	4@9	4@10
	HORIZ. LENGTH	14'-3"	7'-2"	5'-7"
M BAR	BAR NO. & SPACING	4@18	4@18	—
	VERT. LENGTH	3'-11½"	3'-11½"	—
LONGITUDINAL REINFORCEMENT				
DISTRIBUTION *		4@9	5@7	4@6
NO.		19	15	11
LONGITUDINAL		4@12	4@12	4@12
NO.		48	33	20
QUANTITIES				
CONCRETE	C.Y./L.F.	.894	.581	.418
STEEL	LBS./L.F.	135	108	54

SPLICES		
BAR SIZE	LENGTH	REMARKS
4	16"	M BAR ONLY
4	28"	LONGITUDINAL IN WALLS
4	20"	ALL NOT SPECIFIED
5	26"	ALL
6	31"	ALL

*NOTE: DISTRIBUTION STEEL DEFINED AS ALL LONGITUDINAL BOTTOM STEEL IN TOP SLAB.

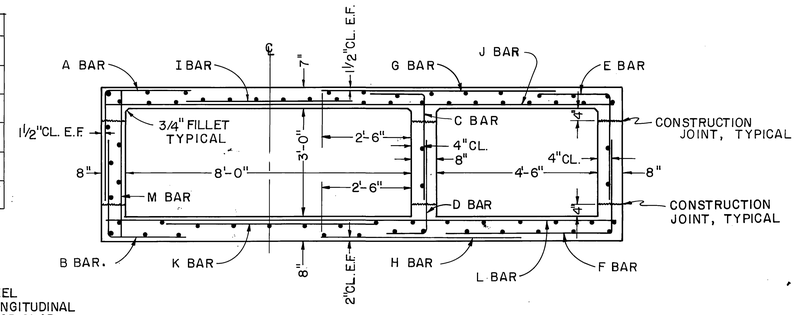

BOX SECTION A

8'-0" W x 3'-0" H, 4'-6" W x 3'-0" H DOUBLE R.C.B.
STA. 1+00.00 TO STA. 1+71.05
SCALE: 1" = 2'-0"

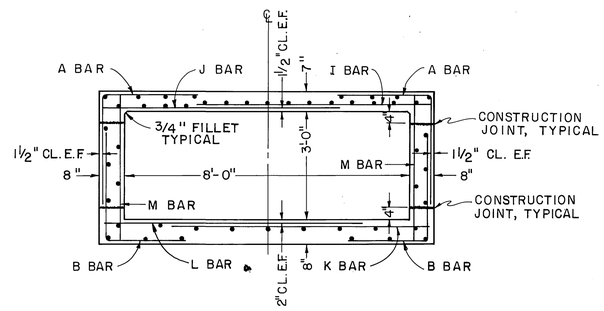

BOX SECTION B

8'-0" W x 3'-0" H R.C.B.
STA. 1+81.05 TO STA. 4+90.00
SCALE: 1" = 2'-0"

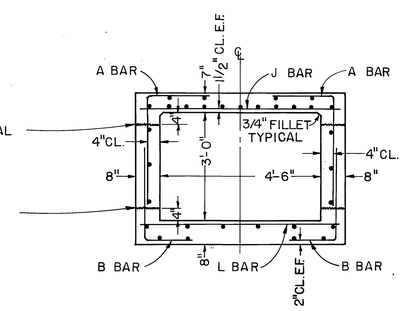

BOX SECTION C

4'-6" W x 3'-0" H R.C.B.
STA. 1+80.16 TO STA. 2+30.00
SCALE: 1" = 2'-0"

NOTES

1. STRUCTURAL CONCRETE SHALL BE CLASS "A".
2. CLEAR COVER FOR STEEL SHALL BE 1½ INCHES FOR TOP SLAB AND SIDE WALLS AND 2 INCHES FOR EACH FACE OF BOTTOM SLAB, UNLESS OTHERWISE NOTED.
3. LONGITUDINAL BARS SHALL BE PLACED IN TOP AND BOTTOM SLABS SYMMETRICALLY ABOUT CENTERLINE. PLACE BARS IN BOX WALLS SYMMETRICALLY ABOUT MID-HEIGHT OF WALLS AND PLACE BARS IN CHANNEL WALLS STARTING AT TOP WITH 1½ INCHES OF CLEAR COVER.
4. STEEL IS DIMENSIONED TO BACK OF BAR BEND.
5. FOR CONSTRUCTION ON CURVES, STRAIGHT TRANSVERSE BARS IN TOP AND BOTTOM SLABS SHALL BE ALIGNED RADIALLY WITH SPACING MEASURED AT CENTERLINE. FOR STRAIGHT BARS AND L-BARS IN WALLS, SPACING SHALL BE MEASURED BETWEEN THE VERTICAL LEGS OF BARS.
6. ALL TRANSVERSE CONSTRUCTION JOINTS SHALL BE IN A VERTICAL PLANE NORMAL TO THE CENTERLINE AND THE SPACING THEREOF SHALL NOT EXCEED 50 FEET OR BE LESS THAN 10 FEET. CONTINUOUS KEYWAYS SHALL BE CONSTRUCTED AS SHOWN IN DETAIL G. A COMPLETE CURTAIN OF TRANSVERSE STEEL SHALL BE PLACED 3 INCHES FROM EACH FACE OF THE JOINTS AND LONGITUDINAL STEEL WILL NOT BE CONTINUOUS THROUGH THE JOINTS. IN ADDITION, EXPANSION JOINTS SHALL BE CONSTRUCTED BETWEEN REINFORCED CONCRETE CHANNEL AND REINFORCED CONCRETE BOX SECTIONS AS SHOWN IN DETAIL H. DOWELS SHALL BE PLACED AT 12" SPACING CENTERED IN THE MIDDLE THIRD OF THE BOTTOM SLAB AND THE TOP THIRD OF SIDE WALLS. A MINIMUM OF 3 DOWELS PER SLAB AND WALLS SHALL BE PLACED.
7. THE WALLS AND TOP SLAB MAY BE POURED MONOLITHIC IN BOX CONSTRUCTION, BUT AFTER THE WALLS HAVE BEEN POURED, A DELAY OF NOT LESS THAN 2 HOURS SHALL BE MADE BEFORE POURING THE TOP SLAB.
8. A 3/4" CHAMFER SHALL BE CONSTRUCTED AT ALL SHARP EDGES OF EXPOSED CONCRETE.
9. WEEPHOLES SHALL BE FORMED AS SHOWN IN BOTH CHANNEL WALLS AT A SPACING OF 10 FEET WITH ONE CUBIC FOOT OF FILTER MATERIAL PLACED AT EACH HOLE.
10. ALL QUANTITIES SHOWN ARE APPROXIMATE.
11. ALL SPLICES ARE SUBJECT TO APPROVAL BY THE ENGINEER.

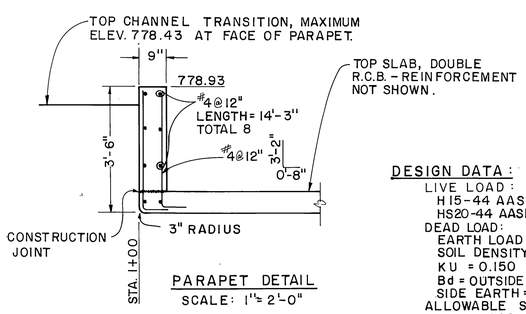

PARAPET DETAIL

SCALE: 1" = 2'-0"

DESIGN DATA:

LIVE LOAD:
H15-44 AASHTO TRUCK (CHAN. SEC.)
HS20-44 AASHTO TRUCK (BOX SEC.)
DEAD LOAD:
EARTH LOAD PER MARSTON'S FORMULA
SOIL DENSITY = 120 PCF
KU = 0.150
Bd = OUTSIDE WIDTH OF BOX + 3 FT.
SIDE EARTH = 40 PCF
ALLOWABLE STRESSES:
f_y = 60,000 psi f_s = 24,000 psi
f'c = 4,000 psi @ 28 DAYS
fc = 1800 psi

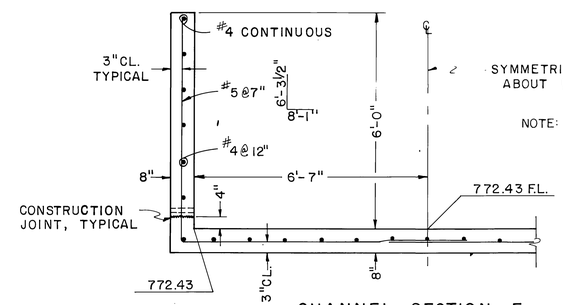

NOTE: TRANSITION CHANNEL SEC. E TO SEC. F, STA. 0+65 TO STA. 1+00. CUTOFF STEEL AT NOTED COVER.

CHANNEL SECTION F

STA. 1+00
SCALE: 1" = 2'-0"

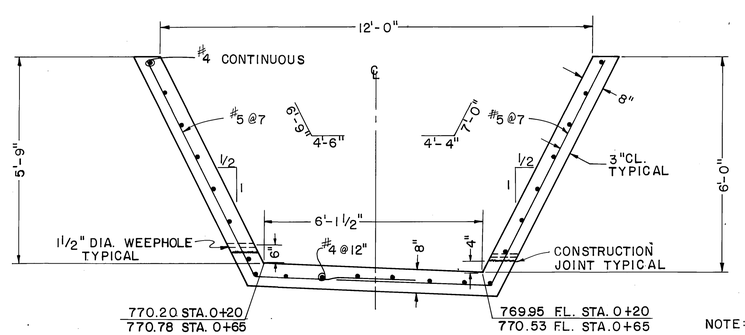

CHANNEL SECTION E

STA. 0+20 TO STA. 0+65
SCALE: 1" = 2'-0"

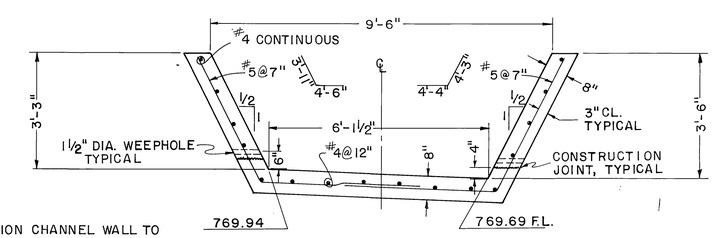

NOTE: TRANSITION CHANNEL WALL TO MEET EXISTING CHANNEL FROM FROM STA. 0+00 TO STA. 0+20. CUTOFF STEEL AT NOTED COVER.

CHANNEL SECTION D

STA. 0+00
SCALE: 1" = 2'-0"

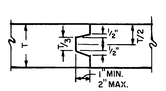

TRANSVERSE CONSTRUCTION JOINT
DETAIL G
NO SCALE

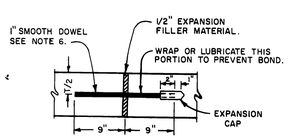

TRANSVERSE EXPANSION JOINT
DETAIL H
NO SCALE

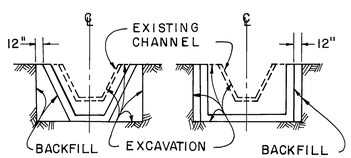

PAY LINES

NOTE: SEE STD. DWG. M815 FOR R.C.B. PAY LINES

CHANNEL QUANTITIES			
SECTION	D	E	F
CONCRETE cy/lf	.366	.504	.654
STEEL lbs/lf	41	55	69

SCALE: 1" = 2'-0"
2' 0 2'

REVISIONS			
C6	A Bar Vert Length Change	WDC	11-3-77
REF.	DESCRIPTION	APPR.	DATE

AS BUILT

RIVERSIDE COUNTY FLOOD CONTROL AND WATER CONSERVATION DISTRICT

DESIGNED BY: R. M.
DRAWN BY: S. Moody
DATE DRAWN: JULY 76
CHECKED BY:
APPROVED BY: John W. Bryant
CHIEF ENGINEER R.E. NO. 8822
DATE: 11-3-76

MONROE STORM DRAIN
STAGE I
STRUCTURAL DETAILS
1970 STORM DRAIN BOND ISSUE PROJECT NO. 17

INDEX OF
PROJECT NO. 1-0-071
DRAWING NO. 1-313
SHEET NO. 13 OF 57

D-352

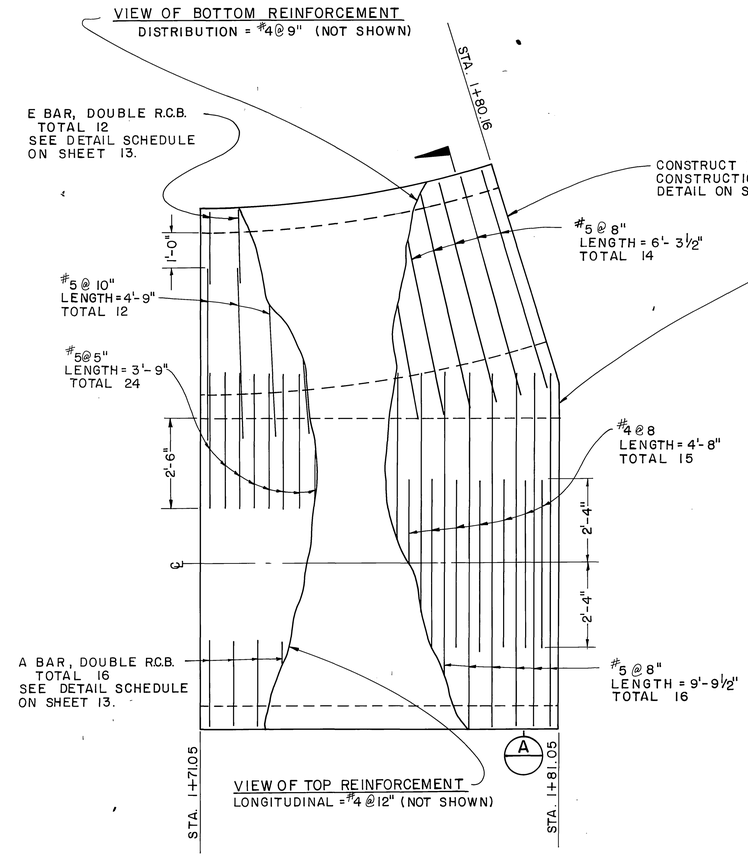

PLAN VIEW TOP SLAB
SPECIAL JUNCTION STRUCTURE
SCALE: 1" = 2'-0"

FOR OVERALL PLAN VIEW, SEE SHEET 2
REFER TO SHEET 13
FOR STRUCTURAL NOTES.

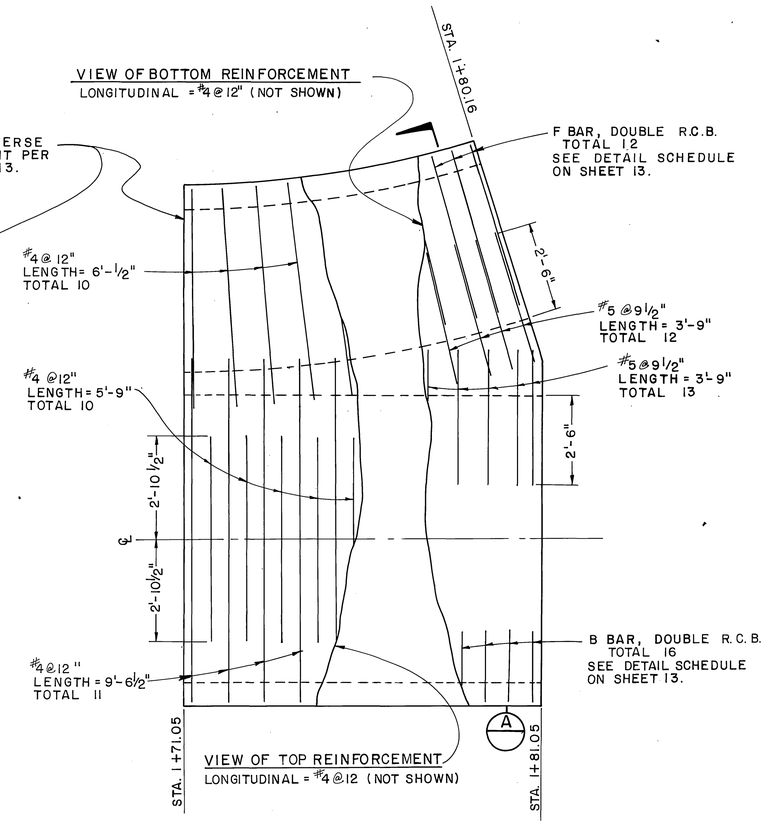

PLAN VIEW BOTTOM SLAB
SPECIAL JUNCTION STRUCTURE
SCALE: 1" = 2'-0"

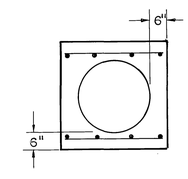

SECTION D
SCALE: 1"=2'-0"

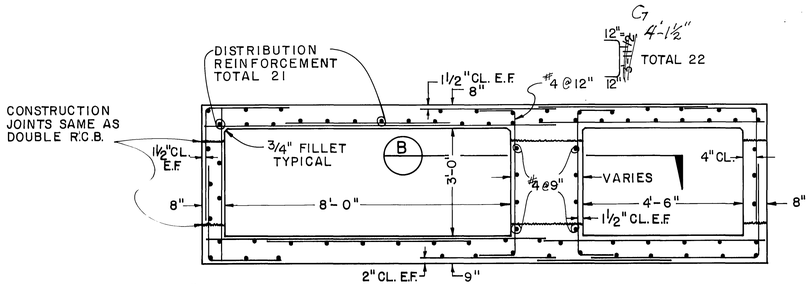

NOTE: LONGITUDINAL = #4 @12,
UNLESS OTHERWISE NOTED.
TOTAL 58

SECTION A
SCALE: 1" = 2'-0"

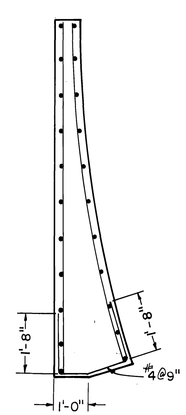

SECTION B
SCALE: 1" = 2'-0"

SCALE: 1" = 2'-0"
2' 0 2'

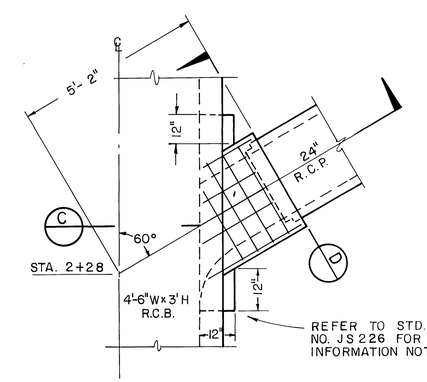

FOR OVERALL PLAN VIEW, SEE
MAGNOLIA AVE. LATERAL, SHEET 2

PLAN — JUNCTION STA. 2+28
SCALE: 1" = 2'-0"

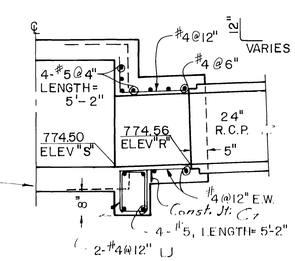

SECTION C
SCALE: 1"=2'-0"

REVISIONS			
CT	Bar Length Change & Const. Jt Added	WBC	July 77
REF.	DESCRIPTION	APPR.	DATE

AS BUILT

RIVERSIDE COUNTY FLOOD CONTROL
AND
WATER CONSERVATION DISTRICT

DESIGNED BY: R. M.
DRAWN BY:
DATE DRAWN: AUG 76
CHECKED BY:
APPROVED BY: Allen W. Bergquist
CHIEF ENGINEER R.E. NO. 8822
DATE: 11-3-76

MONROE STORM DRAIN
STAGE I
STRUCTURAL DETAILS
1970 STORM DRAIN BOND ISSUE PROJECT NO. 17

INDEX UF

PROJECT NO. 1-0-071
DRAWING NO. 1-313
SHEET NO. 14 OF 57

D-352

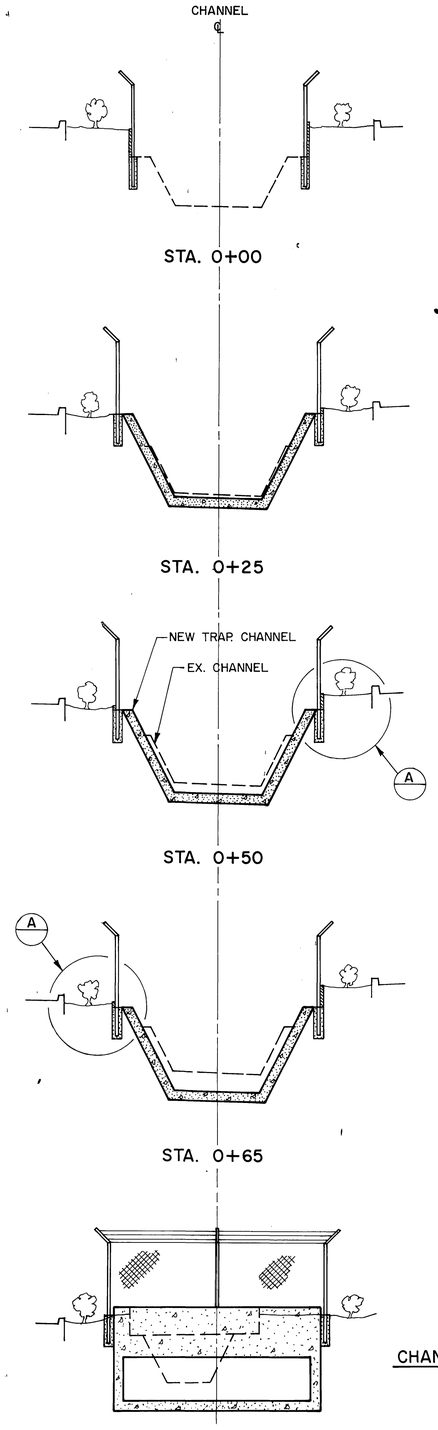

CHANNEL CROSS SECTIONS

5' 0 5'

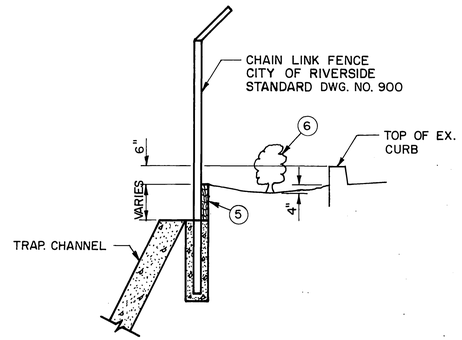

LANDSCAPING DETAIL (A)
(TYPICAL BOTH SIDES OF CHANNEL)
NO SCALE

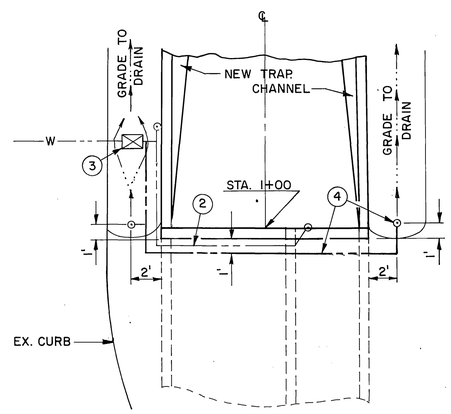

IRRIGATION DETAIL (B)
NO SCALE

NOTES

1. FOR OVERALL PLAN VIEW SEE SHEET NO. 2.
2. REMOVE EXISTING 3/4" GALVANIZED IRON PIPE AND WATER FAUCETS.
3. PROTECT WATER METER IN PLACE OR REMOVE DURING CONSTRUCTION OF CHANNEL AND REPLACE.
4. INSTALL 3/4" GALVANIZED IRON PIPE, 1/2" GALVANIZED IRON PIPE RISERS AND WATER FAUCETS.
5. PLACE 2"x12" REDWOOD TIMBERS AGAINST FENCE FABRIC TO RETAIN FILL BETWEEN STA. 0+00 & STA. 0+95 ON EAST SIDE AND BETWEEN STA. 0+35.5 & STA. 0+76.5 ON WEST SIDE.
6. PLANT MYRTUS COMPACTA, ONE GALLON SIZE, 12" O.C., EACH SIDE OF CHANNEL BETWEEN STA. 0+00 TO STA. 1+00.
7. REMOVE APPROXIMATELY 163 L.F. OF CURB & GUTTER, C.B. AND 48" DIA. TREE AS REQUIRED FOR THE TRAFFIC DETAIL ON SHEET NO. 17 AND INTERSECTION OVERLAY AND BUS BAY DETAIL ON THIS SHEET.

NOTES (CONTINUED)

8. CONSTRUCT CURB AND GUTTER, CASE IB. INCLUDE DEPRESSED CURB FOR WHEELCHAIR RAMP, CITY OF RIVERSIDE STANDARD NO. 304.
9. C.B. NO. 1, DETAIL SHEET NO. 2.
10. 3:1 TAPER. TRANSITION LAST 10' TO JOIN EXISTING CURB AND GUTTER.
11. OVERLAY VARIABLE THICKNESS AC PAVEMENT OVER EXISTING PAVEMENT.

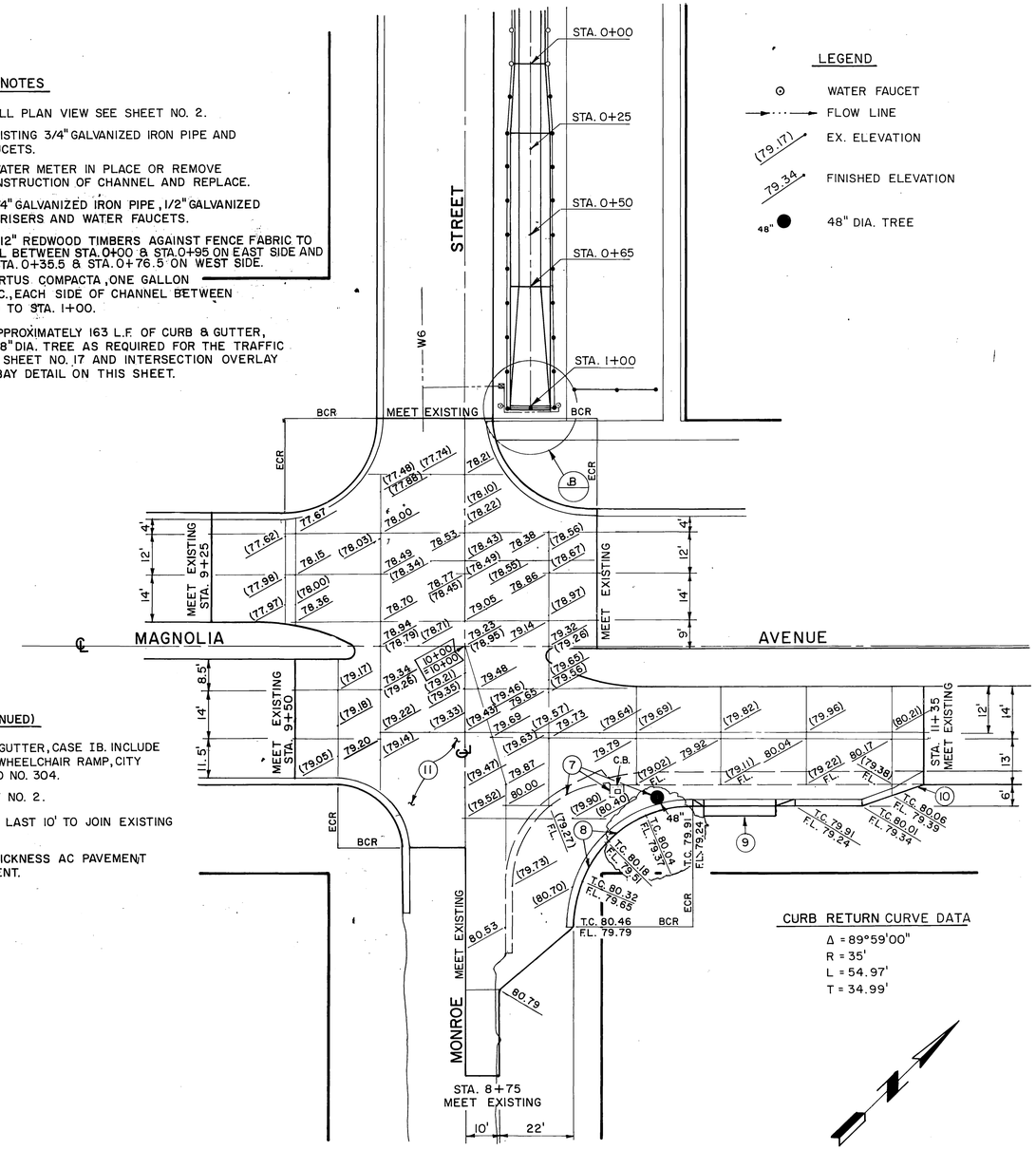

LEGEND

- WATER FAUCET
- FLOW LINE
- (79.17) EX. ELEVATION
- 79.34 FINISHED ELEVATION
- 48" DIA. TREE

CURB RETURN CURVE DATA

Δ = 89°59'00"
R = 35'
L = 54.97'
T = 34.99'

INTERSECTION OVERLAY & BUS BAY DETAIL

20' 10' 0 20'

CITY OF RIVERSIDE PUBLIC WORKS DEPARTMENT			REVISIONS			RIVERSIDE COUNTY FLOOD CONTROL AND WATER CONSERVATION DISTRICT		MONROE STORM DRAIN STAGE I MISCELLANEOUS DETAILS	INDEX WF PROJECT NO. 10 071
APPROVED BY PRINCIPAL ENGINEER	11/1/76	APPROVED BY William D. Gardner PUBLIC WORKS DIRECTOR				DESIGNED BY: R.H. & A.G.K.	APPROVED BY: John M. Bryant CHIEF ENGINEER R.E. NO. 8822		DRAWING NO. 1-313
SENIOR ENGINEER	11-2-76	DATE: 11/2/76	No Change			DRAWN BY: R.A.S.		1970 STORM DRAIN BOND ISSUE PROJECT NO. 17	SHEET NO. 15 OF 57
			REF.	DESCRIPTION	APPR. DATE	DATE DRAWN:	DATE: 11-3-76		
						CHECKED BY:			

AS BUILT

D-352

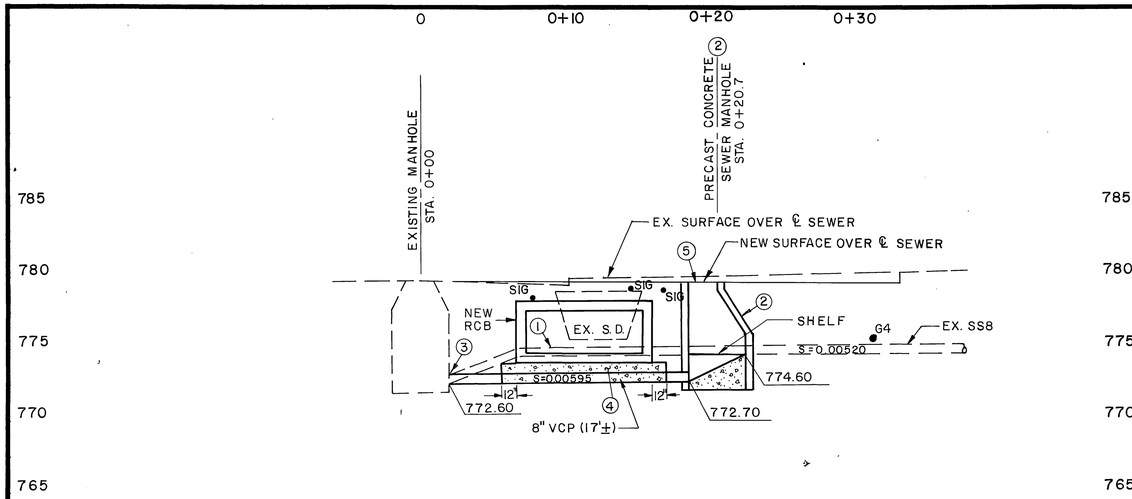

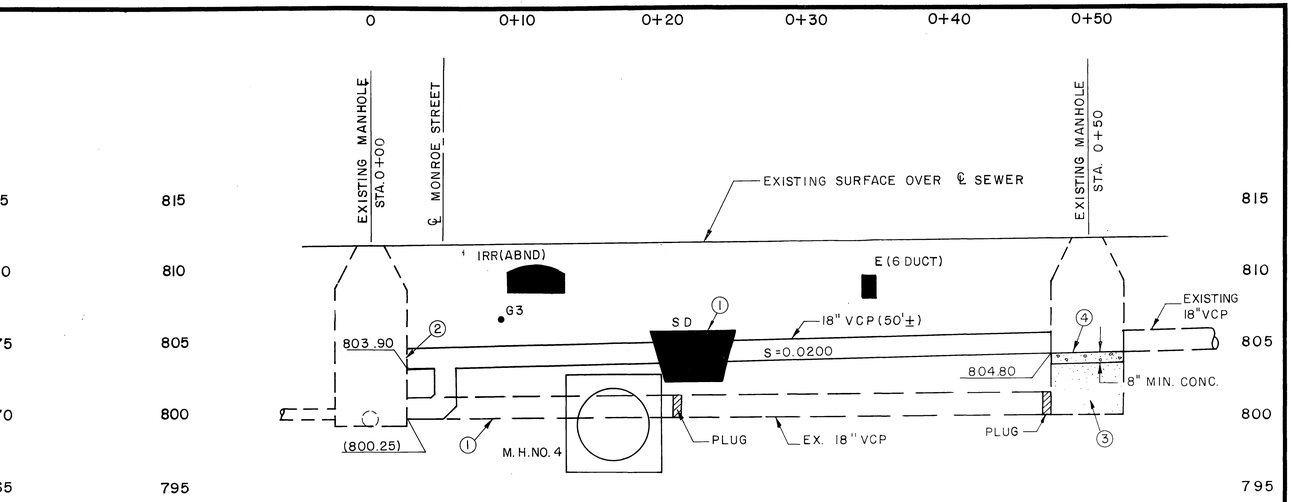

PROFILE

PLAN VIEW BELOW

NOTE: STATIONING FOR SEWER PIPE TO BE CONSTRUCTED IS MEASURED ALONG ℄ OF NEW PIPE.

SEWER RECONSTRUCTION

MONROE STREET & INDIANA AVENUE

PLAN VIEW SHEET NO. 9

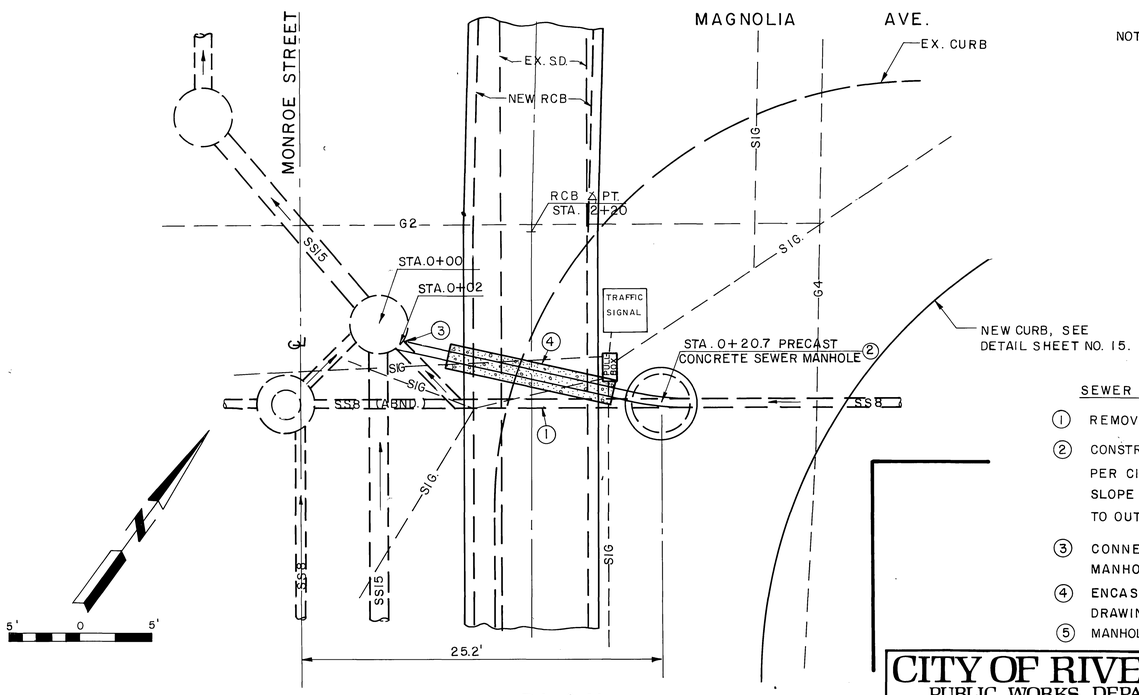

PLAN

SEWER RECONSTRUCTION – MONROE STREET & MAGNOLIA AVE.

OVERALL PLAN VIEW SHEET NO.2

NOTE:
ALL WORK ON THIS SHEET SHALL COMPLY WITH APPLICABLE CITY OF RIVERSIDE STANDARD DRAWINGS.

SEWER CONSTRUCTION NOTES (FOR ABOVE DETAIL)

1. REMOVE INTERFERING PORTIONS OF EXISTING 18" VCP & EXISTING S.D.
2. BREAK INTO EXISTING MANHOLE. CONSTRUCT DROP PER CITY OF RIVERSIDE STANDARD DRAWING NO. 503.
3. FILL BOTTOM OF EXISTING MANHOLE WITH SAND OR CLASS "B" CONCRETE.
4. CHANNELIZE NEW BOTTOM PER CITY OF RIVERSIDE STANDARD DRAWING NO. 504.

SEWER CONSTRUCTION NOTES (FOR DETAIL TO THE LEFT)

1. REMOVE INTERFERING PORTIONS OF EXISTING SS8
2. CONSTRUCT PRECAST CONCRETE SEWER MANHOLE PER CITY OF RIVERSIDE STANDARD DRAWING NO. 500. SLOPE FLOWLINE OF MANHOLE FROM INLET ELEV. TO OUTLET ELEV. AS SHOWN IN PROFILE.
3. CONNECT NEW 8" VCP TO 8" OPENING IN EXISTING MANHOLE.
4. ENCASE NEW SS8 PER RCFC & WCD STANDARD DRAWING NO. M807.
5. MANHOLE FRAME & COVER PER CITY OF RIVERSIDE STANDARD DRAWING NO. 540.

INDEX WF

CITY OF RIVERSIDE
PUBLIC WORKS DEPARTMENT

APPROVED BY PRINCIPAL ENGINEER — SEWER SYSTEMS — APPROVED BY William D. Gardner, PUBLIC WORKS DIRECTOR — DATE 11/2/76

REVISIONS

REF.	DESCRIPTION	APPR.	DATE
	No Change		

RIVERSIDE COUNTY FLOOD CONTROL AND WATER CONSERVATION DISTRICT

DESIGNED BY: A.G.K.
DRAWN BY: S. Moody
DATE DRAWN: 8-2-76
CHECKED BY:
APPROVED BY: John W. Bryant, CHIEF ENGINEER R.E. NO. 8822
DATE: 11-3-76

MONROE STORM DRAIN
STAGE I
SEWER RECONSTRUCTION DETAILS
1970 STORM DRAIN BOND ISSUE PROJECT NO. 17

PROJECT NO. 1-0-071
DRAWING NO. 1-313
SHEET NO. 16 OF 57

AS BUILT

D-352

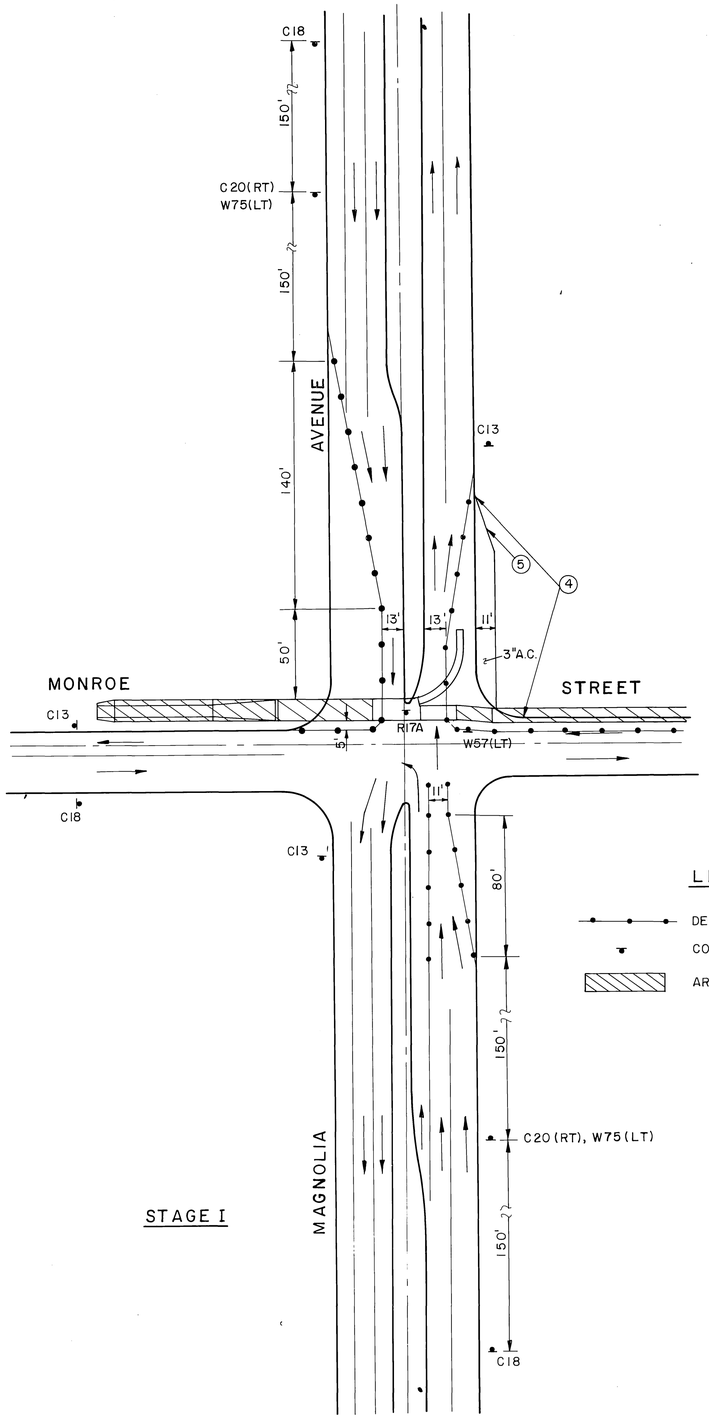

STAGE I

GENERAL TRAFFIC NOTES

1. THE CONTRACTOR SHALL CONSTRUCT THE STORM DRAIN FACILITIES IN STAGES AS SHOWN ON THESE PLANS.
2. THESE ARE MINIMUM SIGNING REQUIREMENTS; FLAGMEN OR ADDITIONAL SIGNS MAY BE REQUIRED TO FACILITATE PUBLIC SAFETY AND TRAFFIC FLOW IF DEEMED NECESSARY BY THE ENGINEER.
3. THE CONTRACTOR SHALL CONTACT THE TRAFFIC SIGNAL SHOP (787-7576) 48 HOURS PRIOR TO BEGINING CONSTRUCTION IN THE INTERSECTION.

(4) REMOVE APPROXIMATELY 163 L.F OF EXISTING CURB AND GUTTER. PAVE 11 FOOT WIDE STRIP OF 3" A.C. FOR USE AS TEMPORARY ROADWAY IN STAGE II.

(5) EASTERLY EDGE OF BUS BAY. SEE DETAIL ON SHEET NO. 15.

6 TRAFFIC SIGNAL DETAIL SHEET NO. 18

LEGEND

DELINEATORS, MAX. SPACING 20 FEET.

CONSTRUCTION SIGNING

AREA UNDER CONSTRUCTION

1" = 40'

40' 0 40'

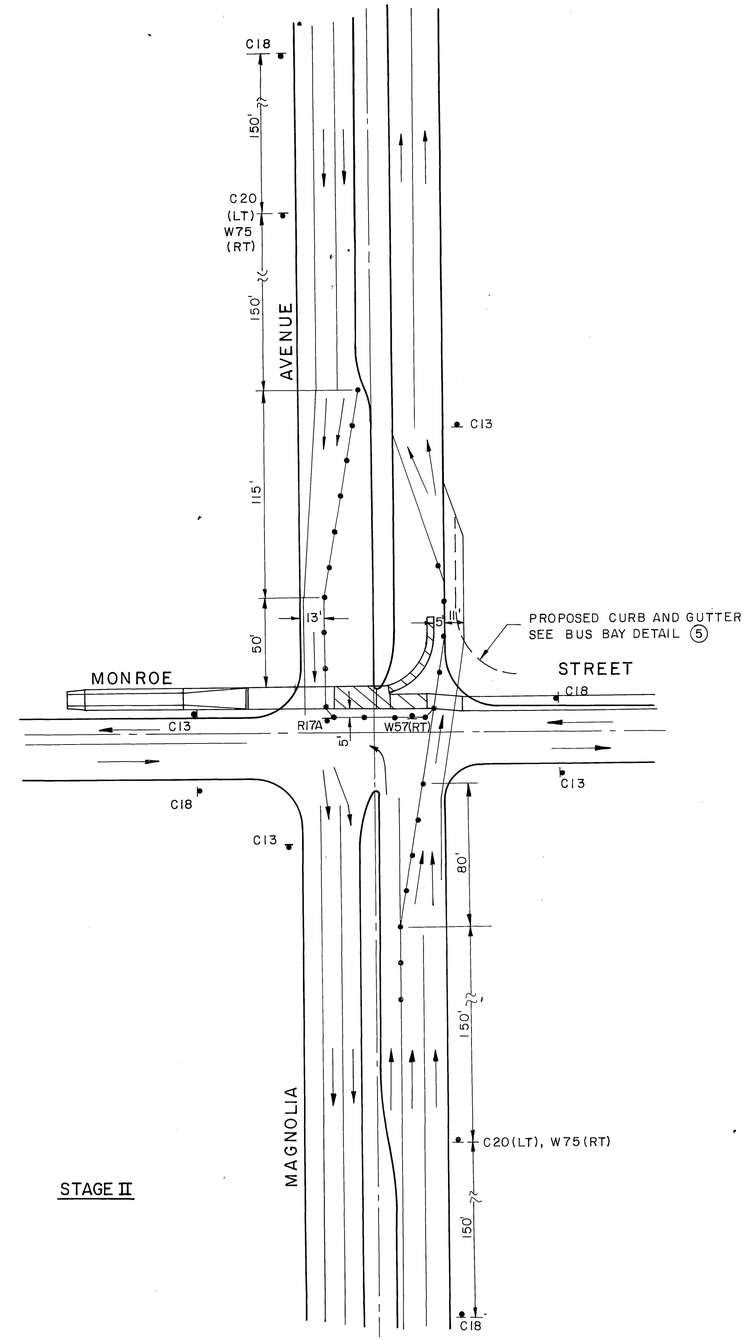

STAGE II

REVISIONS			
REF.	DESCRIPTION	APPR.	DATE

RIVERSIDE COUNTY FLOOD CONTROL AND WATER CONSERVATION DISTRICT

DESIGNED BY: A.G.K.
DRAWN BY: S. Moody
DATE DRAWN: 8-76
CHECKED BY:

APPROVED BY: John W. Bryant
CHIEF ENGINEER R.E. NO. 8822
DATE: 11-3-76

MONROE STORM DRAIN
STAGE I
MAGNOLIA AVE. & MONROE ST.
TRAFFIC DETAIL
1970 STORM DRAIN BOND ISSUE PROJECT NO. 17

INDEX UE

PROJECT NO. 1-0-071
DRAWING NO. 1-313
SHEET NO. 17 OF 57

D-352

EQUIPMENT SCHEDULE

LOCATION	STD.	VEHICLE EQUIPMENT				PED. EQUIPMENT			LUMINAIRES	REMARKS
		HEADS	MTG'S	BACK PLATE	LOUVER	HEADS	MTG'S	PPB'S	WATTAGE	
A	TYPE 2	1W3C	SV-1-T	1		1W2C	SP-1-T	1		EXISTING
	18' SA	1W3C(12")	MAS	1						
B	TYPE 1C	1W3C	TV-1	1		1W2C	SP-1-T			EXISTING
C	45D4	1W3C	SV-1-T	1		1W2C	SP-1-T		400	EXISTING, PROVIDE TEMPORARY SERVICE IF STANDARD INTERFERES DURING CONSTRUCTION
D	TYPE 1C					1W2C	TP-1	1		RELOCATE EXISTING
E	TYPE 18	1W3C	SV-1-T	1						
	25' SA	1W3C(12")	MAS	1		1W2C	SP-1-T	1		PROVIDE AND INSTALL NEW STANDARD, SIGNAL ARM, PED PUSH BUTTON, AND SIGNAL HEAD MOUNTINGS. INSTALL SALVAGED VEHICULAR AND PEDESTRIAN HEADS FROM LOCATION "J"
F	TYPE 1C	1W3C	TV-1	1		1W2C	SP-1-T			INSTALL STANDARD AND EQUIP SALVAGED FROM LOCATION "I"
G	45D4	1W3C	SV-1-T	1		1W2C	SP-1-T		400	EXISTING
H	TYPE 1C					1W2C	TP-1	1		EXISTING
I	TYPE 1C	1W3C	TV-1	1		1W2C	SP-1-T	1		SALVAGE STANDARD AND EQUIPMENT FOR LOCATION "F" AND REMOVE BASE
J	TYPE 2	1W3C	SV-1-T	1		1W2C	SP-1-T	1		SALVAGE STANDARD AND EQUIPMENT, REUSE VEHICULAR AND PEDESTRIAN HEADS FOR LOCATION "E" REMOVE BASE
	18' SA	1W3C(12")	MAS	1						

CONDUCTOR SCHEDULE

CONTROL FUNCTION	CONDUCTORS SIZE	CONDUCTORS INSULATION	CONDUIT RUN 1	2	3	4	5	6	7	8	9	10	11	12	13
VEHICLE HEADS	#14	U.F.													
ØA			3	6	6	6	9	3	3	3	3				
ØB					3	3	6	3	3	3		3	3	3	
PED HEADS															
ØA					2	2	4	2	2	2		2	2	2	
ØB				2	2	2	4	2	2	2	4	2	2		2
PED PUSH BUTTON															
ØBW			1	2	2	2	6	4	3	2	1	1	1		1
SPARES			3	3	3	3	6	3	3	3	3	3	3	3	3
DETECTOR CABLE															
ØB LOOP	#12/2	P.E.					1	1	1	1		1			
ØB MAGNETOMETER	#18/4					1	1								
FUTURE ØA DET.	#12	U.F.	1	1	1	1	1								
12V COMMON	#12		1	1	1	1	2	1	1	1	1	1	1		1
120V COMMON	#10		1	1	1	1	2	1	1	1	1	1	1	1	1
SIGNAL SERVICE	#8	T.H.W.	2	2	2	2	2								
LUMINAIRES	#8		2	2	2										
TOTALS	#14	U.F.	7	13	18	18	35	17	16	15	11	11	11	8	5
	#12/2	P.E.					1	1	1	1		1			
	#18/4					1	1								
	#12	U.F.	2	2	2	2	2	1	1	1	1	1	1		1
	#10		1	1	1	1	2	1	1	1	1	1	1	1	1
	#8	T.H.W.	4	4	4	2	2								
CONDUIT SIZE			2"	2"	2½"	2"		2"	1½"	2"	2"	2"	2"	1½"	1½"
			EXISTING							NEW				EXIST	

NOTES

1. ALL WORK SHALL CONFORM TO SECTION 86 OF THE STATE STANDARD SPECIFICATIONS, THE STANDARD PLANS AND THE CITY OF RIVERSIDE STANDARD DRAWING NO. 606.
2. ALL PULLBOXES, DETECTOR LOOPS AND STANDARDS WILL BE LOCATED IN THE FIELD BY THE TRAFFIC ENGINEER OR HIS REPRESENTATIVE.
3. DETECTOR LOOPS SHALL BE INSTALLED IN THE PRESENCE OF THE TRAFFIC ENGINEER OR HIS REPRESENTATIVE.
4. NEW CONDUCTORS SHALL BE INSTALLED IN RUNS 6 7 8 9 10 11 12 13 AND AFFECTED CONDUCTORS IN RUN 5.
5. ALL SIGNAL CONDUCTORS SHALL BE CONTINUOUS.
6. DELIVER SALVAGED STANDARD AND EQUIPMENT TO 3970 MULBERRY STREET.

SYMBOLS

- NEW CONDUIT RUNS
- EXISTING CONDUIT RUNS (To remain in service).
- EXISTING CONDUIT RUNS (To be abandoned).
- B/I — 6' x 6' LOOP (3 TURNS), WHERE B INDICATES PHASE CODE TO CORRESPOND WITH CONDUCTOR LABELING.

EXISTING PHASE DIAGRAM

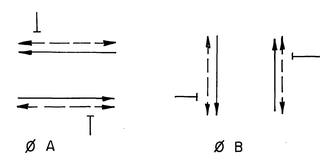

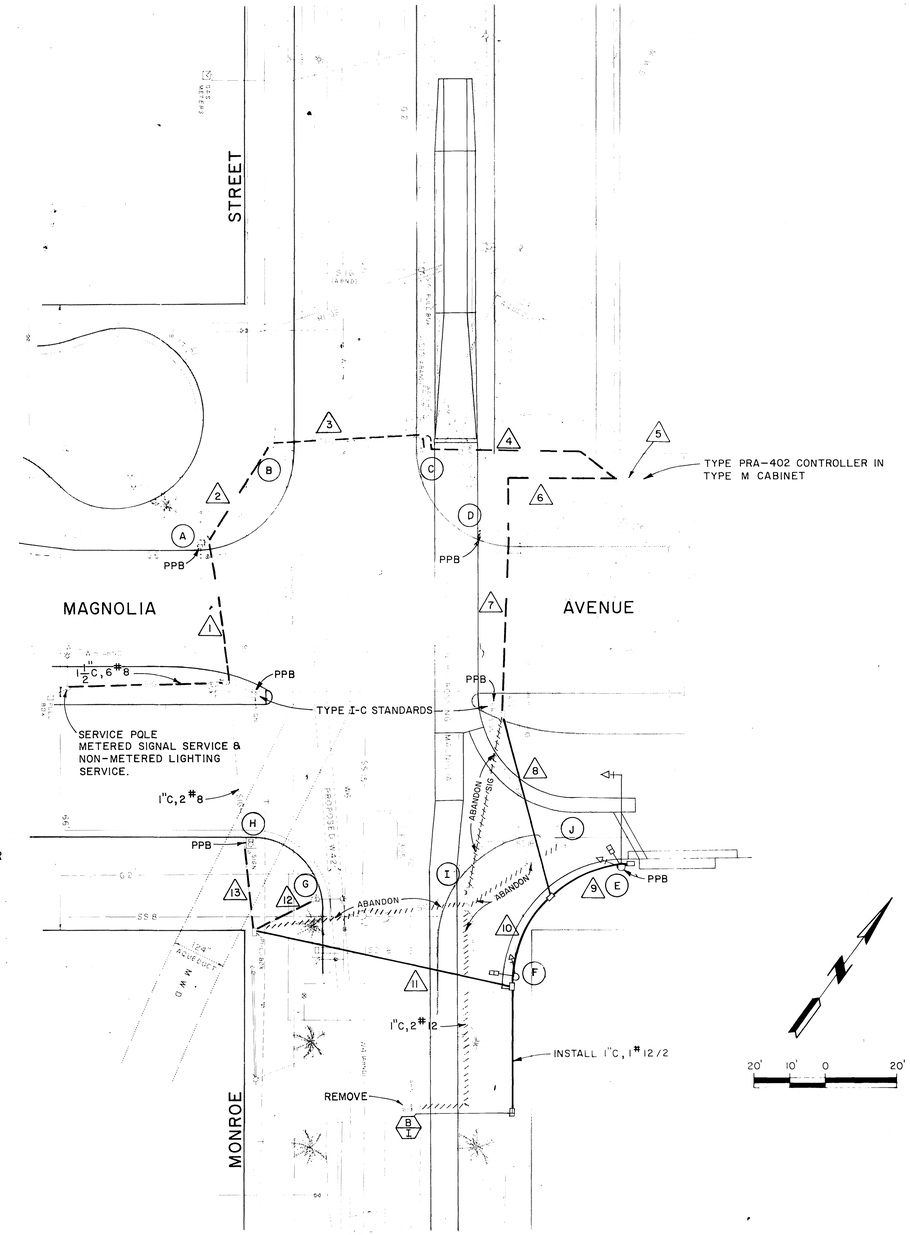

INDEX UP

CITY OF RIVERSIDE PUBLIC WORKS DEPARTMENT				REVISIONS				RIVERSIDE COUNTY FLOOD CONTROL AND WATER CONSERVATION DISTRICT		MONROE STORM DRAIN STAGE I MAGNOLIA AVE. & MONROE ST. TRAFFIC SIGNAL DETAIL 1970 STORM DRAIN BOND ISSUE PROJECT NO. 17	PROJECT NO. 1-0-071
APPROVED BY			APPROVED BY					DESIGNED BY:	APPROVED BY:		DRAWING NO. 1-313
PRINCIPAL ENGINEER		11/1/76	PUBLIC WORKS DIRECTOR					DRAWN BY: R.A.S.	CHIEF ENGINEER REG. NO. 8822		SHEET NO. 18 OF 57
TRAFFIC ENGINEER		11/1/76						DATE DRAWN:	DATE: 11-3-76		
CHIEF R.W. ENGINEER			DATE: 11/2/76	REF.	DESCRIPTION	APPR.	DATE	CHECKED BY:			

D-352