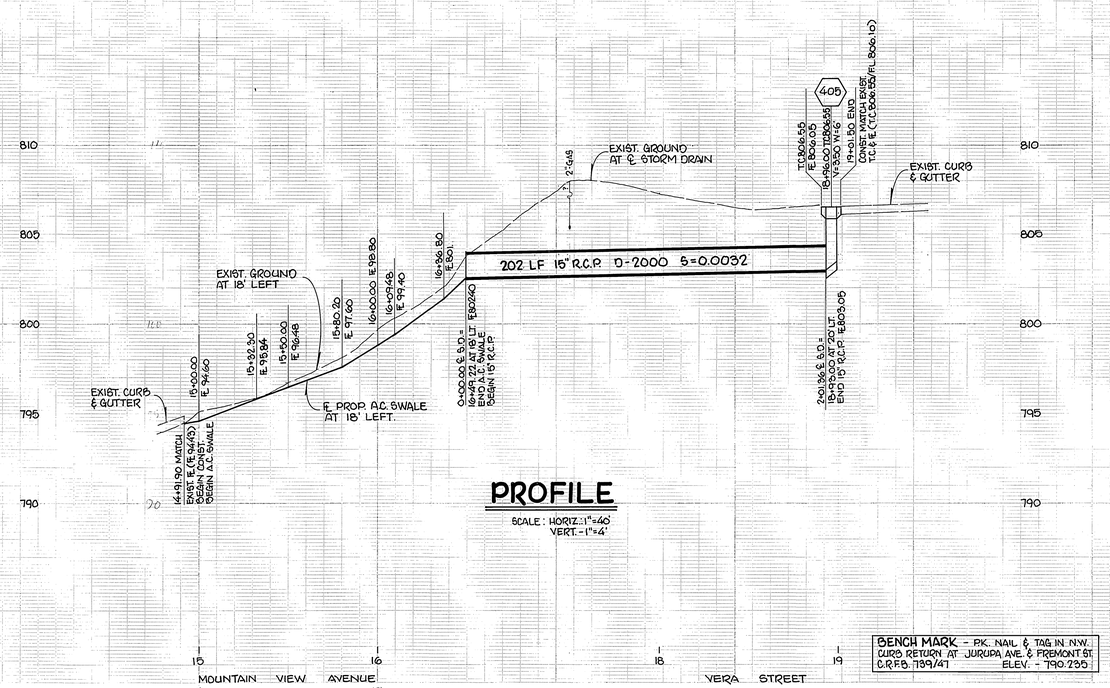


## PROFILE

SCALE: HORIZ.: 1" = 40'
VERT. - 1" = 4'

BENCH MARK - P.K. NAIL & TAG IN N.W. CURB RETURN AT JURUPA AVE. & FREMONT ST. C.R.F.B. 139/47 ELEV. - 790.235

## CONSTRUCTION LEGEND

CENTERLINE ——℄—— SUBDIVISION LOT LINE ——P/L——
RIGHT-OF-WAY LINE ——R/W—— DIRECTION OF FLOW

CONSTRUCT STRUCTURAL SECTION OF 0.35' A.C. OVER 0.55' CLASS 2 AGGREGATE BASE.

REGRADE AND PAVE DRIVEWAYS AS SHOWN ON THE PLAN WITH 0.21' A.C.

## SPECIAL CONSTRUCTION NOTES

NUMBERS ABOVE 100 IN A HEXAGON ON THE PLAN REFER TO THE RESPECTIVE STANDARD DRAWING AND SHALL BE CONSTRUCTED ACCORDINGLY, UNLESS MODIFICATIONS ARE NOTED ON THE PLAN. ANY NUMBER SHOWN BELOW THE STANDARD DRAWING NUMBER INDICATES THE SPECIFIC ALTERNATE TO BE CONSTRUCTED.

## GENERAL CONSTRUCTION NOTES

1. EXISTING UTILITIES SHOWN ON THIS PLAN, ARE PLOTTED FROM UTILITY RECORDS. THE CONTRACTOR IS REQUIRED TO TAKE DUE PRECAUTIONARY MEASURES TO LOCATE AND PROTECT ALL UTILITIES WHETHER OR NOT SHOWN ON THIS PLAN. IF THE COVER OF A UTILITY IS KNOWN IT IS SHOWN IN THE PROFILE. UTILITIES SHOWN IN THE PROFILE AS "A" INDICATES THAT COVER IS UNKNOWN, BUT THE UTILITY IS NOT EXPECTED TO CONFLICT WITH THE PROPOSED IMPROVEMENTS.
2. ALL ELEVATIONS SHOWN ON THE PLAN SHALL BE STAKED IN THE FIELD.
3. UTILITIES SHOWN IN CONFLICT WITH PROPOSED STORM DRAIN FACILITIES WILL BE RELOCATED PRIOR TO CONSTRUCTION.
4. THE CONTRACTOR SHALL TRIM EXISTING PAVEMENT TO A NEAT LINE PRIOR TO PLACEMENT OF MATCHUP PAVEMENT.

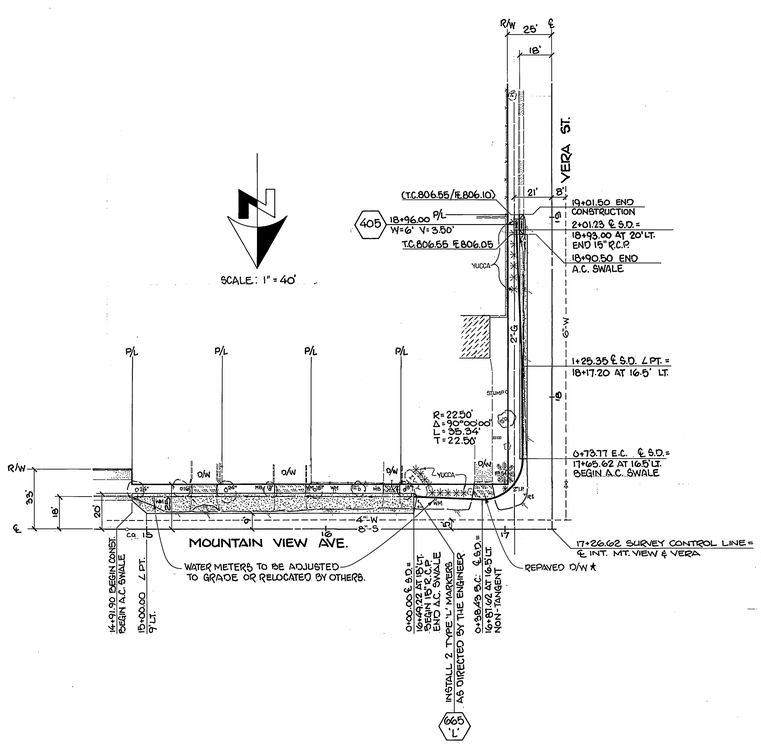


## TYPICAL SECTIONS

SCALE: HORIZ. - 1" = 5'
VERT. - 1" = 1'

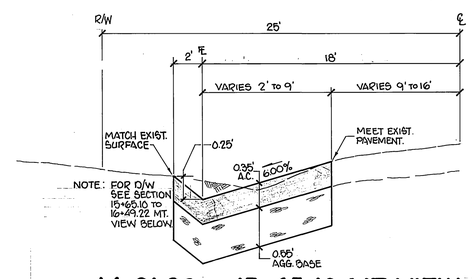


### 14+91.90 TO 15+65.10 MT. VIEW

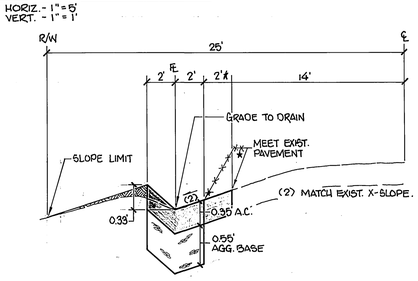


### 17+65.62 TO 18+90.50 VERA ST.

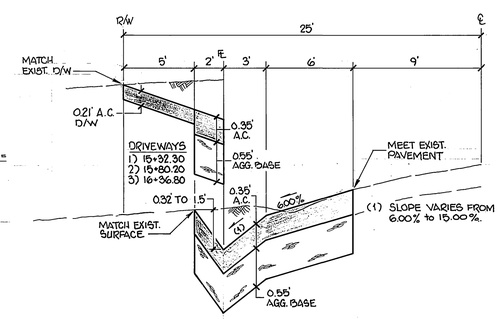


### 15+65.10 TO 16+49.22 MT. VIEW

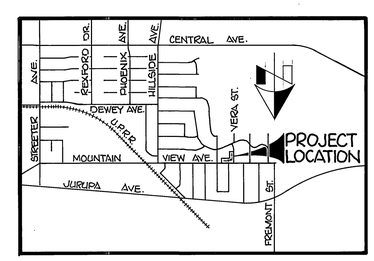


## PROJECT LOCATION MAP

SCALE: 1" = 1600'

★AS BUILT 3/24/82 G.K.

| MARK | REVISIONS | APPR. | DATE |
|---|---|---|---|

DESIGNED BY BJM DRAWN BY SK CHECKED BY DMS

CITY OF RIVERSIDE
PUBLIC WORKS DEPARTMENT

| APPROVED BY | | |
|---|---|---|
| PRINCIPAL ENGINEER | | 10/26/81 |
| PARK DEPARTMENT | | |
| TRAFFIC DIVISION | | 10/26/81 |
| CHIEF P. W. ENGINEER | | 11/2 |

APPROVED BY Robert Nichols
PUBLIC WORKS DIRECTOR
DATE 11/2/81

# VERA ST. STORM DRAIN

HORIZ. SCALE: 1" - AS SHOWN VERT. SCALE: 1" - AS SHOWN

INDEXED B.C.D.
ACCOUNT NO. 09-573-458

D-403

SHEET 1 OF 1

FILE NO.