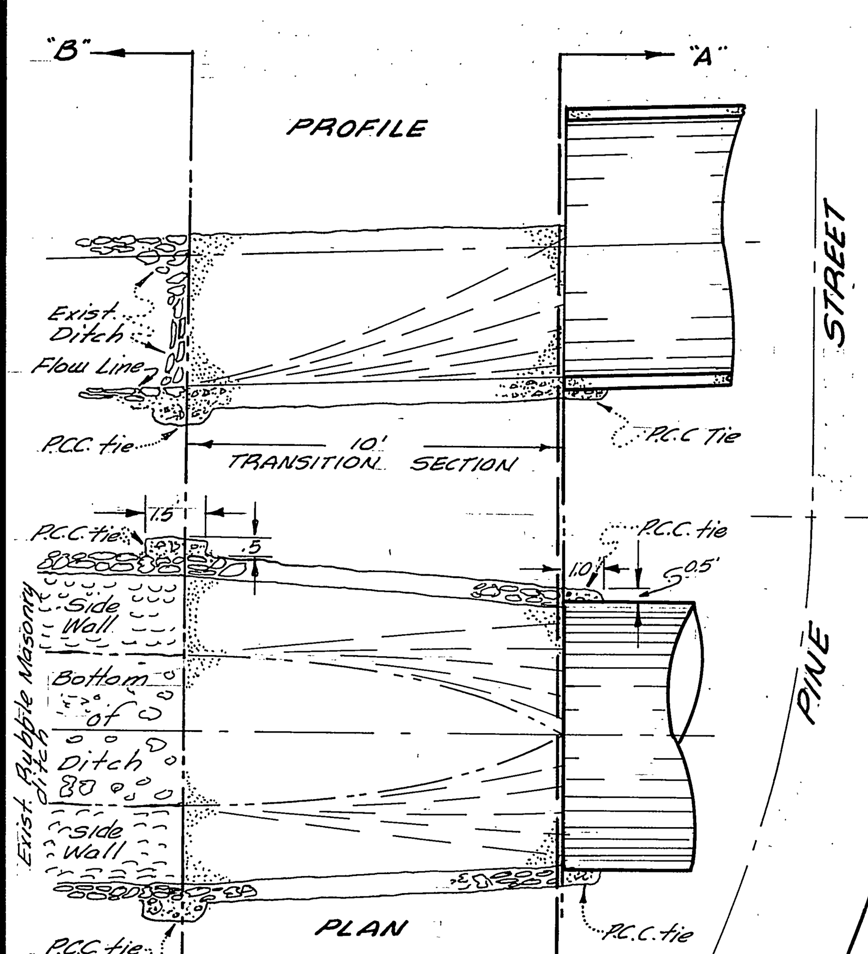

TRANSITION SECTION DETAILS
SCALE 1"=4'

NOTE:
Transition Section to be Rubble Masonry Const., sides and bottom to be 6" thick (min.) with trowled cement finish inside with P.C.C. ties as shown.
ALTERNATE - 4" thick Gunite reinforced with 4"x4"x10x10 wire mesh with P.C.C. ties as shown.

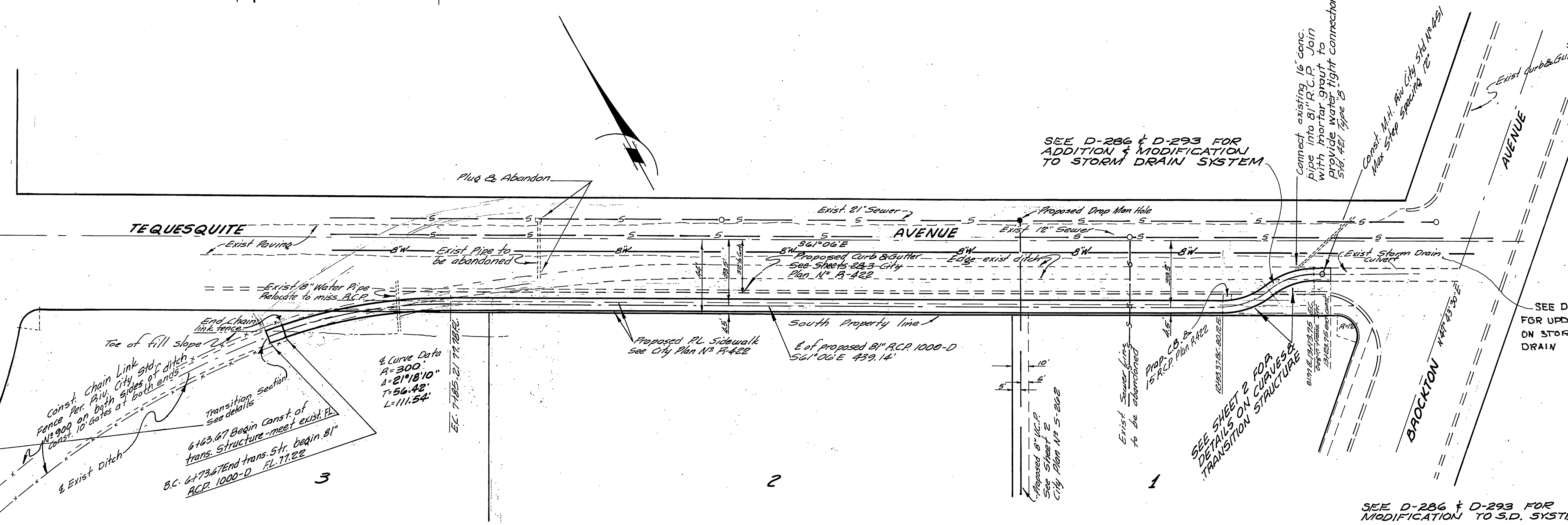

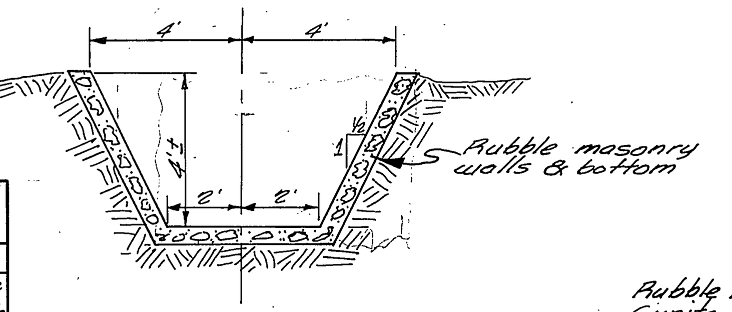

TYPICAL SECTION "B""B" EXISTING DITCH
SCALE 1"=4'

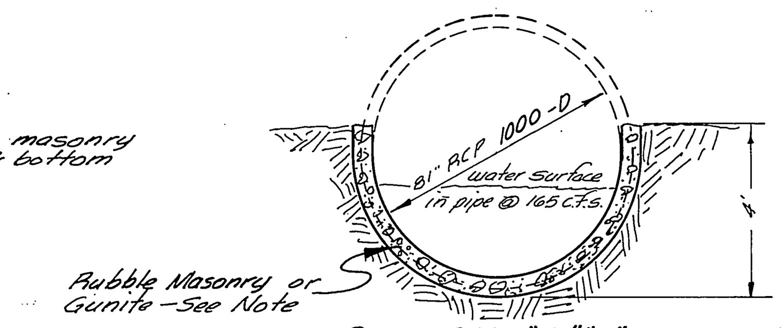

SECTION "A""A" TRANSITION SECTION
SCALE 1"=4'

HYDRAULIC DATA
based on the Manning Formula

Section	n =	S_{ave} =	Q =	
"A""A"	0.016	.0050	170 cfs.	Gunite
"B""B"	0.025	.0075	165 cfs.	Rubble

With ditch flowing full, pipe depth would be 29"

CONSTRUCTION NOTES:

R.C.P. is to be 1000-D minimum

R.C.P. is to be bedded Per Case II Riv. City Standard No 452.

Concrete used shall be Class "A" Concrete

All construction shall be in accordance with City of Riverside Standard Specifications #460

Storm Drain Sta. 13+23.75 = Tequesquite Ave. Sta. 13+23.75 - Riv. City Plan No R-422.

It shall be the responsibility of the Contractor to clear the Right of Way in accordance with the provisions of the law as it affects each utility, including irrigation lines and appurtenances and at no extra cost to the City.

BENCH MARK:
R.R. Spike in Power Pole #12439-J N.E. cor. Pine Street and Tequesquite Avenue. Elevation 785.61
F.B. 717

J. F. DAVIDSON-CIVIL ENGINEER
R.E. NO. 66
RIVERSIDE, CA
APPROVED BY J.F. Davidson 12/19/60

CITY OF RIVERSIDE
DEPARTMENT OF PUBLIC WORKS

PTION

STORM DRAIN

TEQUESQUITE STORM DRAIN
STATION 7+04.03 TO 13+23.75

TRACT 2175

1"=40' 1"=4'

CHECKED BY W.J.

[signature] 2-6-61

D-56

1 2

INDEXED

2147

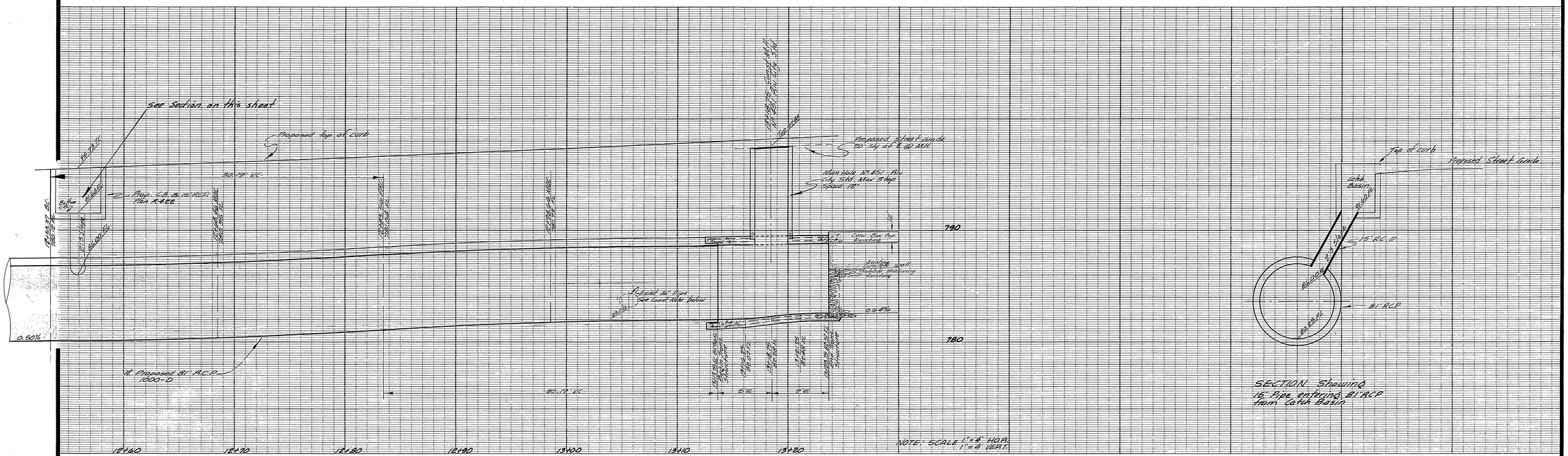

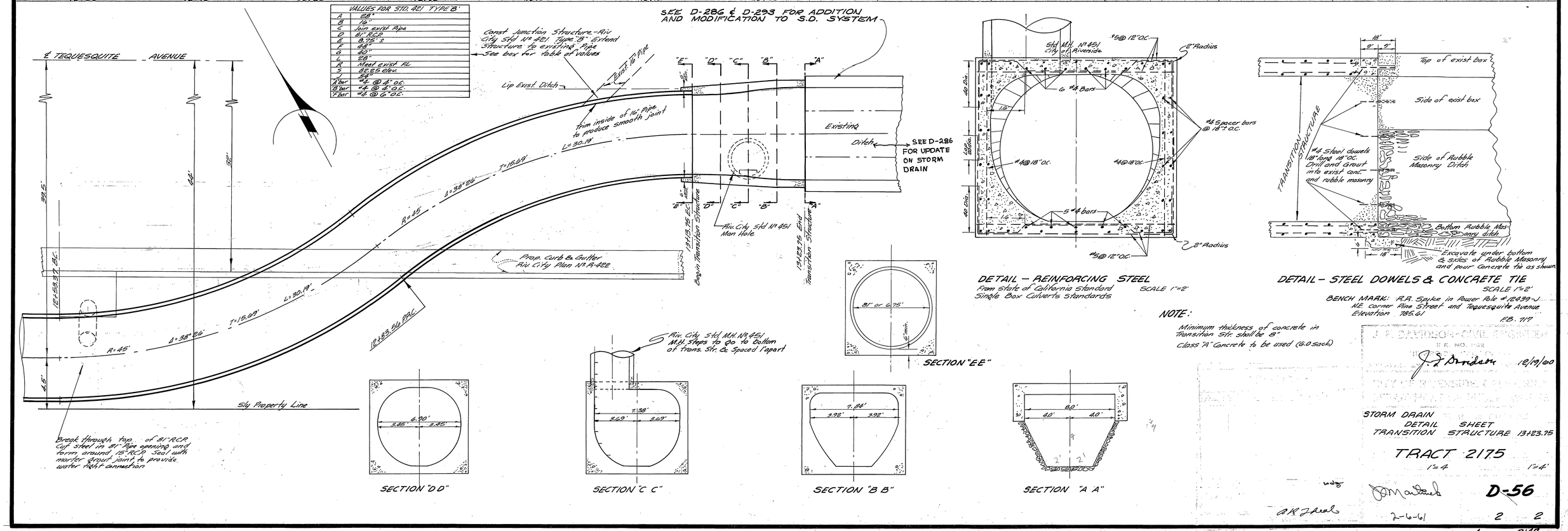

VALUES FOR STD. 421 TYPE "B"	
A	28"
B	16"
C	Join exist Pipe
D	81" R.C.P.
E	8.75' ±
F	48"
G	40"
L	28"
R	Meet exist F.L.
S	82.25 elev.
J	54"
A bar	#4 @ 4" O.C.
B bar	#4 @ 4" O.C.
F bar	#4 @ 6" O.C.

DETAIL – REINFORCING STEEL
From State of California Standard Single Box Culverts Standards
SCALE 1"=2'

DETAIL – STEEL DOWELS & CONCRETE TIE
SCALE 1"=2'

BENCH MARK: R.R. Spike in Power Pole # 12439-J N.E. corner Pine Street and Tequesquite Avenue Elevation 785.61

F.B. 717

NOTE:
Minimum thickness of concrete in Transition Str. shall be 8"
Class "A" Concrete to be used (6.0 sack)

J. F. DAVIDSON-CIVIL ENGINEER
R.E. NO. 1142
J. F. Davidson 12/19/60

STORM DRAIN
DETAIL SHEET
TRANSITION STRUCTURE 13+23.75

TRACT 2175
1"=4' 1"=4'

D-56

2-6-61

2 2

2147