RIVERSIDE COUNTY FLOOD CONTROL AND WATER CONSERVATION DISTRICT

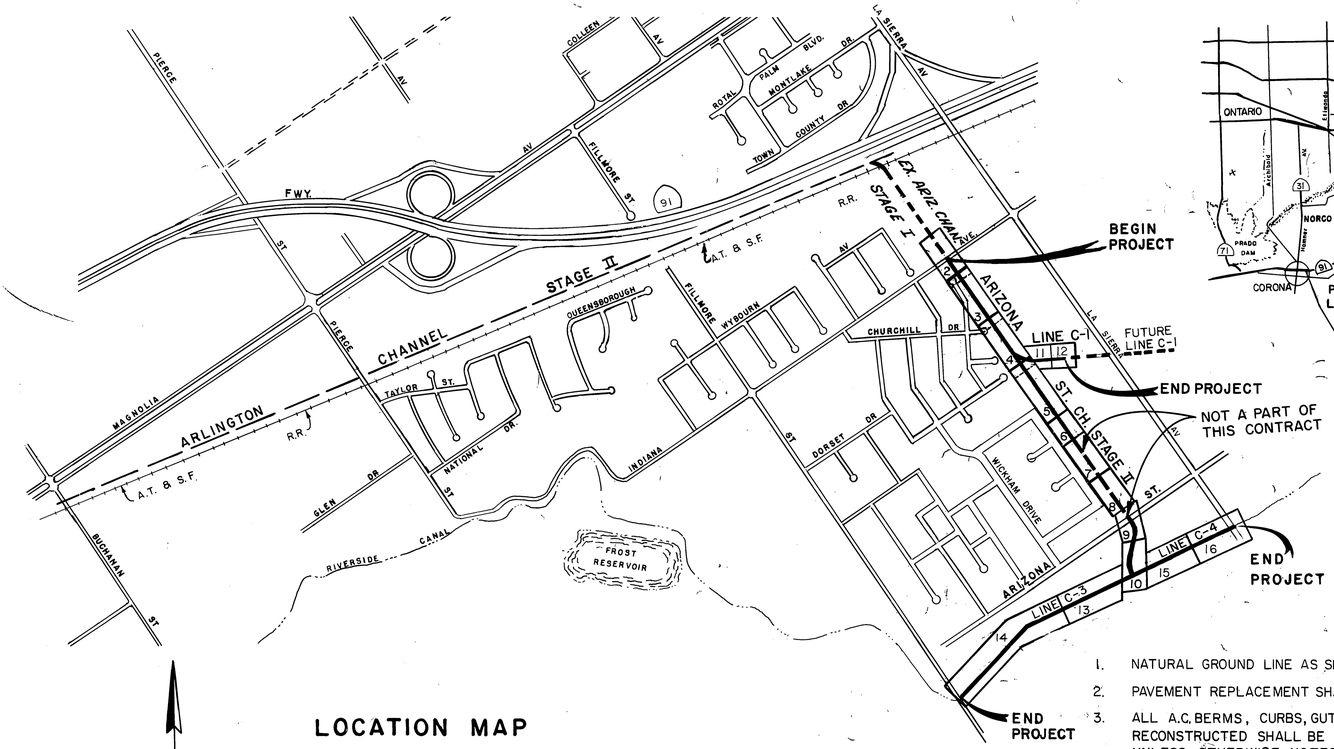

LOCATION MAP

600' 0 600'

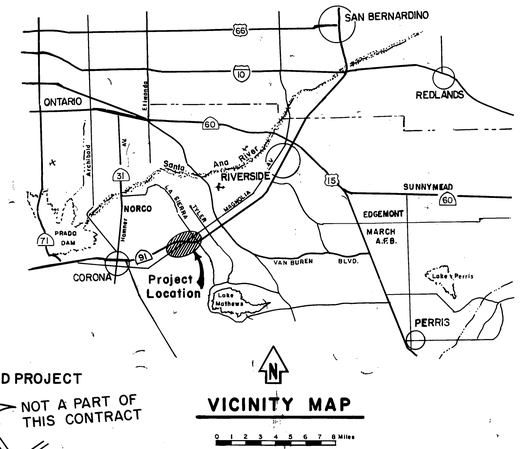

VICINITY MAP

0 1 2 3 4 5 6 7 8 Miles

1. NATURAL GROUND LINE AS SHOWN IS AT THE ℄ OF R/W.
2. PAVEMENT REPLACEMENT SHALL BE 3" OF ASPHALT CONC. & 6" OF CLASS 2 BASE.
3. ALL A.C. BERMS, CURBS, GUTTERS, SIDEWALKS, DRIVEWAYS & OTHER EX. IMPROVEMENTS TO BE RECONSTRUCTED SHALL BE CONSTRUCTED AT SAME EL. & LOCATION AS THE EX. IMPROVEMENTS UNLESS OTHERWISE NOTED.
4. ELEVATIONS & LOCATIONS OF UTILITIES ARE SHOWN APPROX. ON PLANS, 48 HOURS BEFORE EXCAVATION CALL UNDERGROUND SERVICE ALERT 1-800-422-4133. ALL UTILITIES SHALL BE PROTECTED IN PLACE EXCEPT AS NOTED ON PLANS & SPECIFICATIONS.
5. ALL OPENINGS RESULTING FROM CUTTING OR PARTIAL REMOVAL OF EX. CULVERTS, PIPES OR SIMILAR STRUCTURES TO BE ABANDONED SHALL BE SEALED, BOTH ENDS, WITH 6" OF CLASS "B" CONCRETE.
6. CUT AND PLUG ALL INTERFERING IRRIGATION LINES UNLESS OTHERWISE SPECIFIED.
7. ALL TRAPEZOIDAL CHANNELS SHALL HAVE A 6" CONCRETE INVERT.
8. CONTOURS SHOWN ON THE DRAWINGS DO NOT REFLECT EX. GRADES.
9. SEE SHEETS 14, 23, 25, 26, 27 & 33 FOR EARTHWORK PAYLINES.

INDEX

	SHEET NO.
TITLE SHEET	1
PLAN AND PROFILE	2-16
SEWER REMODEL, CHURCHILL DR.	17
STRUCTURAL DETAILS	18-19

R.C.F.C.D STANDARD DRAWINGS

JS 228	JUNCTION STRUCTURE NO. 3	20
JS 231	JUNCTION STRUCTURE NO. 6	21
MH 259	STANDARD DROP STEP	22
CH 326	TRAPEZOIDAL CHANNEL DETAILS	23
CH 327	RECTANGULAR CHANNEL STRUCTURAL DETAILS	24
CH 329	TRANSITION STRUCTURAL DETAILS	25-27
CH 332	SUBDRAIN DETAILS	28
BX 401	SINGLE CELL REINFORCED CONCRETE BOX	29
M 801	CHAIN LINK FENCE DETAILS	30
M 806	PIPE SUPPORTS ACROSS TRENCHES	31
M 814	ABBREVIATIONS AND SYMBOLS	32
M 815	BEDDING AND PAY LINES	33
M 816	CONCRETE BULKHEAD	34
M 819	MAXIMUM CHORD LENGTHS FOR CURVED SECTIONS	35

CITY OF RIVERSIDE STANDARDS

NO 200	CURB AND GUTTER	36
NO 302	DRIVE WAY APPROACHES	37-38
NO 500	PRECAST CONC. SEWER MANHOLE	39
NO 503	DROP MANHOLE	40

STATE OF CALIFORNIA DEPARTMENT OF TRANSPORTION STANDARDS

MISCELLANEOUS DETAILS AND SINGLE BOX CULVERT		41-42

TRAFFIC & DETOURS

TRAFFIC PLAN		43

REGISTERED PROFESSIONAL ENGINEER KEITH C. EDWARDS No. 12400 EXP. 3-31-87 C.E. STATE OF CALIFORNIA

INDEXED-CD

REVISIONS			
REF	DESCRIPTION	APPR	DATE
	No Change		

AS BUILT

RIVERSIDE COUNTY FLOOD CONTROL AND WATER CONSERVATION DISTRICT

DESIGNED BY: A.E.P.
DRAWN BY: K.R.B.
DATE DRAWN: MAY 1984
CHECKED BY: K.S.P.

RECOMMENDED FOR APPROVAL BY: DESIGN ENGINEER R.E. NO. 16757 DATE: 11-21-86

APPROVED BY: CHIEF ENGINEER R.E. NO. 12400 DATE: 11-26-86

ARIZONA STREET CHANNEL
STAGE II
TITLE SHEET
1970 STORM DRAIN BOND ISSUE PROJECT NO. S-8

PROJECT NO. 1-0-170
DRAWING NO. 1-447
SHEET NO. 1 OF 43

D-607

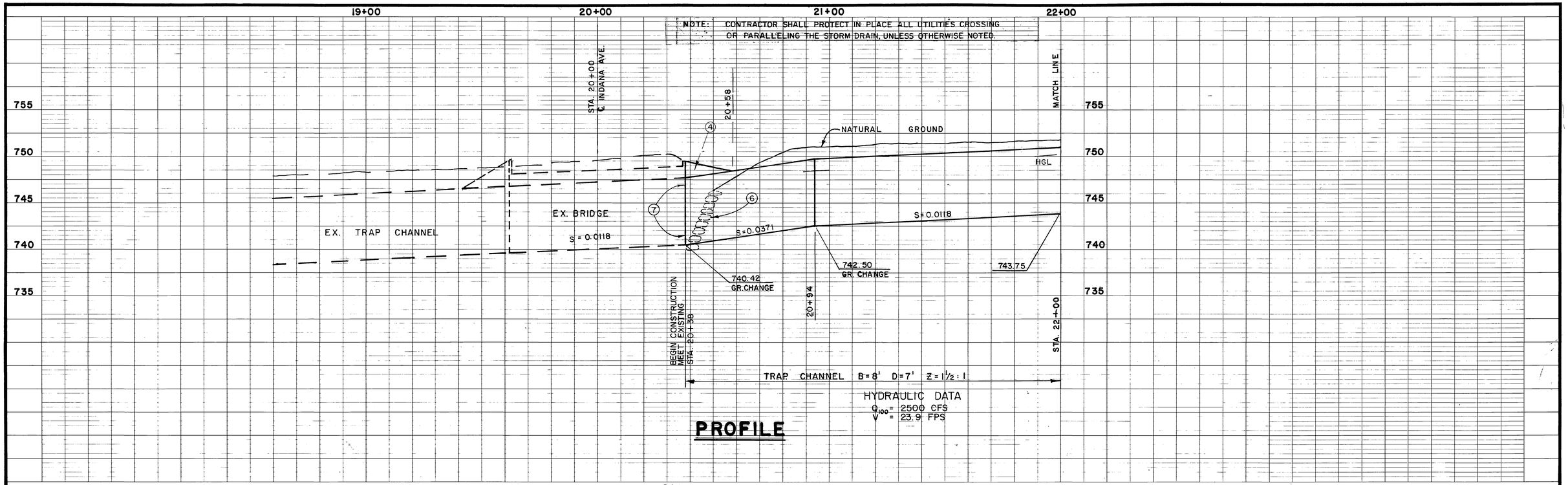

PROFILE

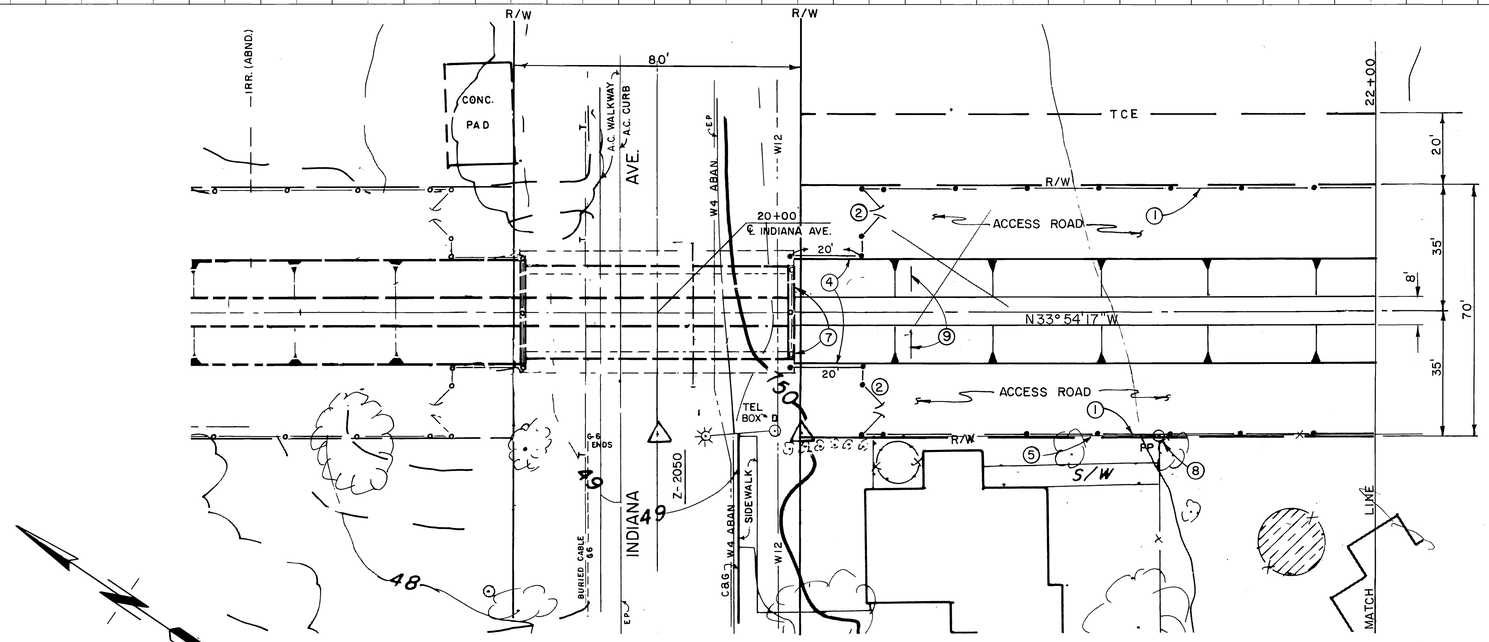

PLAN

20' 0 20'

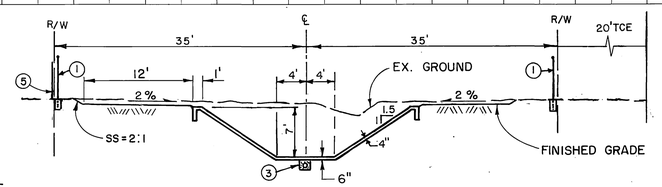

TYPICAL SECTION
STA. 22+00

10' 0 10'

NOTES:

1. 6' CHAIN LINK FENCE
2. CHAIN LINK 14' DOUBLE GATE
3. BEGIN SUBDRAIN AT STA. 20+40.
4. CONSTRUCT RETAINING WALLS PER DETAIL ON SHT. 19.
5. PROTECT EXISTING FENCE.
6. REMOVE EX. CEMENT TREATED SANDBAG REVETMENT AROUND INLET TO EX. BRIDGE.
7. TIE INTO EX. KEYED CONST. JT. ALL CHAN. LINING TO BE 6" THICK WITHIN 1' OF CONST. JT.
8. PROTECT EX. POWER POLES TYP.
9. INSTALL CHANNEL LADDERS STA. 20+70 PER DETAIL SHT. 5.

INDEXED-CD

BENCH MARK
CHISELED BOX ON CURB SO SIDE OF INDIANA APPROX. 400' E OF INTERSECTION WICKHAM AND INDIANA
EL. 748.88

REVISIONS			
REF.	DESCRIPTION	APPR.	DATE
	No Change		

RIVERSIDE COUNTY FLOOD CONTROL AND WATER CONSERVATION DISTRICT

DESIGNED BY: A.E.P.
DRAWN BY: K.R.B.
DATE DRAWN: SEPT. 85
CHECKED BY: E.T.P.

RECOMMENDED FOR APPROVAL BY: Neil A. Thelen, DESIGN ENGINEER R.E. NO. 16757, DATE: 11/14/86

APPROVED BY: Kenneth Edwards, CHIEF ENGINEER R.E. NO. 12400, DATE: 11-26-86

ARIZONA STREET CHANNEL
STAGE II
STA. 20+38 TO STA. 22+00
1970 STORM DRAIN BOND ISSUE PROJECT NO. S-8

PROJECT NO. 1-0-170
DRAWING NO. 1-447
SHEET NO. 2 OF 43

AS BUILT

D-607

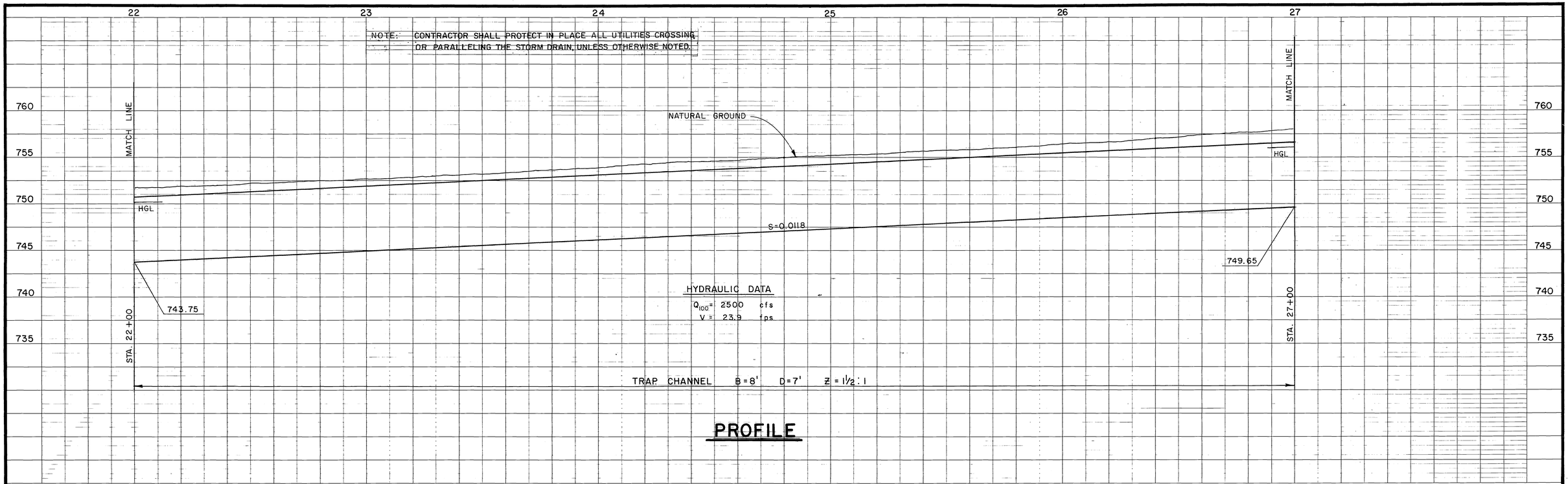

PROFILE

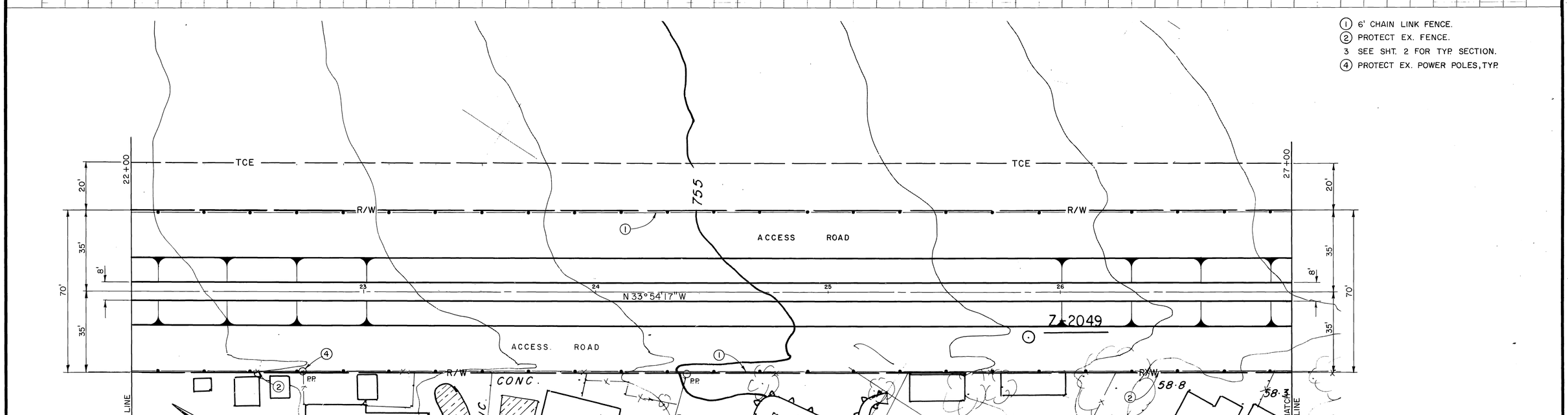

PLAN

20' 0 20'

BENCH MARK	REVISIONS			
CHISELED BOX ON CURB SO SIDE OF INDIANA APPROX 400' E OF INTERSECTION WICKHAM AND INDIANA.	REF.	DESCRIPTION	APPR.	DATE
EL 748.88		No Change		

AS BUILT

RIVERSIDE COUNTY FLOOD CONTROL AND WATER CONSERVATION DISTRICT

DESIGNED BY: A.E.P.
DRAWN BY: K.R.B.
DATE DRAWN: 5/1984
CHECKED BY: F.J.P.

RECOMMENDED FOR APPROVAL BY: Neal L. Sutherland, DESIGN ENGINEER R.E. NO. 16757, DATE: 11/14/86

APPROVED BY: Kenneth L. Edwards, CHIEF ENGINEER R.E. NO. 12400, DATE: 11-26-86

ARIZONA STREET CHANNEL
STAGE II
STA. 22+00 TO STA. 27+00
1970 STORM DRAIN BOND ISSUE PROJECT NO. S-8

PROJECT NO. 1-0-170
DRAWING NO. 1-447
SHEET NO. 3 OF 43

INDEXED-CD

D-607

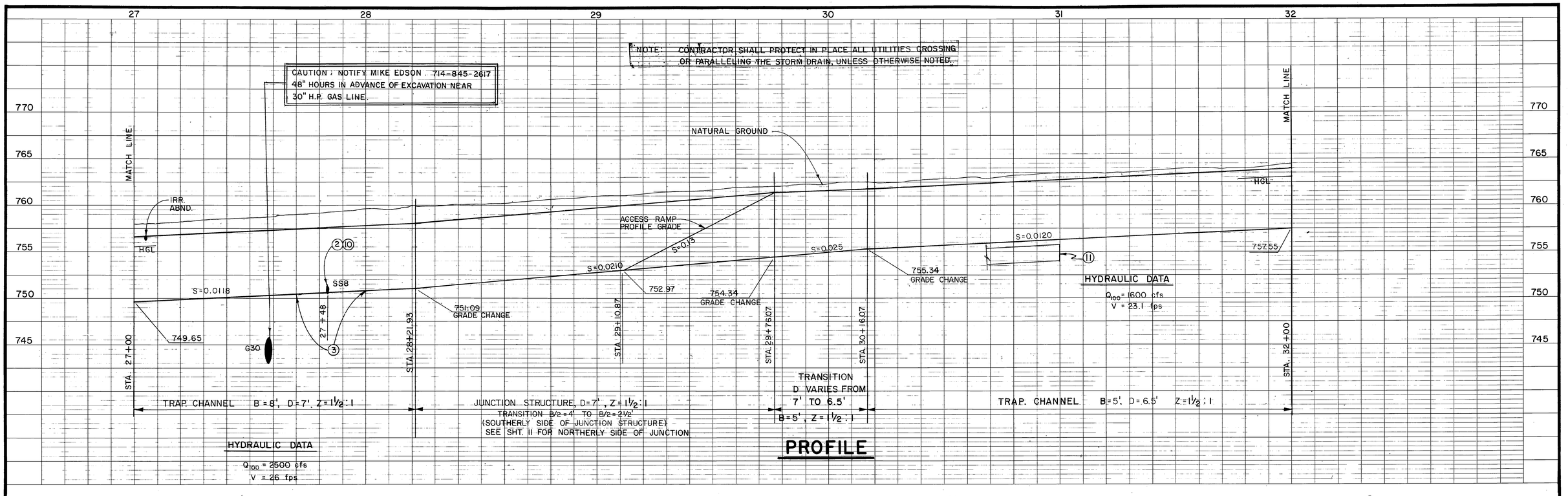

1. 6' CHAIN LINK FENCE.
2. SEE SEWER REMODEL DETAIL SHT. 17.
3. NO SUBDRAIN STA. 27+70 TO ~~28+00~~ 27+80 TO CLEAR SEWER.
4. PROTECT EX. FENCE.
5. REMOVE & REPLACE EX. BARRICADE AS REQ'D. TO REMODEL SEWER.
6. JOINT PATTERN IN JUNCTION AREA SHALL BE APPROVED BY ENGINEER.
7. REMOVE INTERFERING STAND PIPES & PLUG LINES (TYP.)
8. ACCESS RAMP & SLOPES TO BE 6" THICK. RAMP TO HAVE COURSE BROOM FINISH TRANSVERSE TO ℄.
9. PROTECT EX. POWER POLES (TYP.).
10. ADD #4 BARS @ 6" E.W. TO INVERT SLAB OVER SEWER (6'W x 15'L).
11. TERMINATE SUBDRAIN STA. 31+00.

INDEXED-CD.

BENCH MARK	REVISIONS			RIVERSIDE COUNTY FLOOD CONTROL AND WATER CONSERVATION DISTRICT			ARIZONA STREET CHANNEL STAGE II	PROJECT NO. 1-0-170
	1 DELETED TCE	NLS	12/17/86	DESIGNED BY: A.E.P.	RECOMMENDED FOR APPROVAL BY: Neal L. Smithson DESIGN ENGINEER R.E. NO. 16757	APPROVED BY: Kenneth F. Edwards CHIEF ENGINEER R.E. NO. 12400	STA. 27+00 TO STA. 32+00	DRAWING NO. 1-447
	C No ③ Change Sta.		9/22/87	DRAWN BY: K.R.B.				
	REF. DESCRIPTION	APPR.	DATE	DATE DRAWN: MAY, 1984	DATE: 11/14/86	DATE: 11-26-86	1970 STORM DRAIN BOND ISSUE PROJECT NO. S-8	SHEET NO. 4 OF 43
				CHECKED BY: K.J.P.				

AS BUILT

D-607

NOTE: CONTRACTOR SHALL PROTECT IN PLACE ALL UTILITIES CROSSING OR PARALLELING THE STORM DRAIN, UNLESS OTHERWISE NOTED.

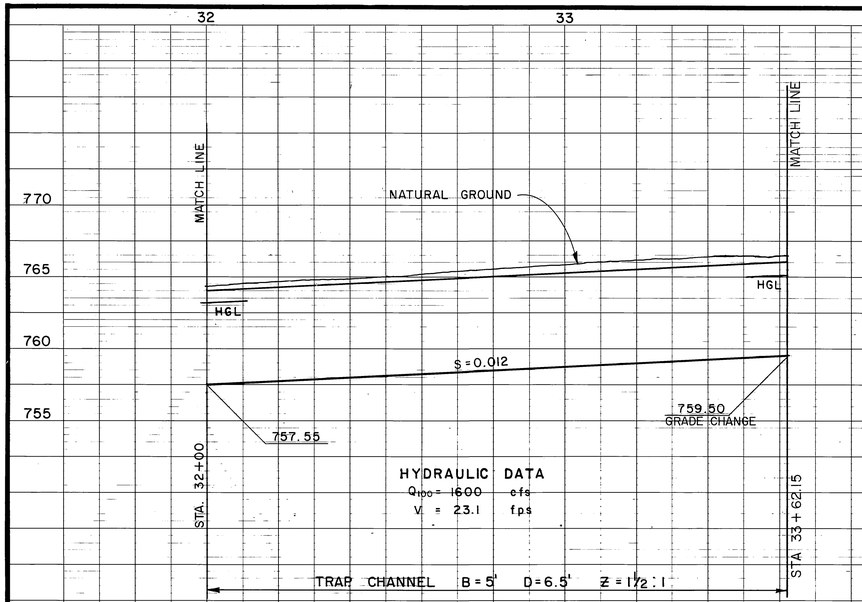

PROFILE

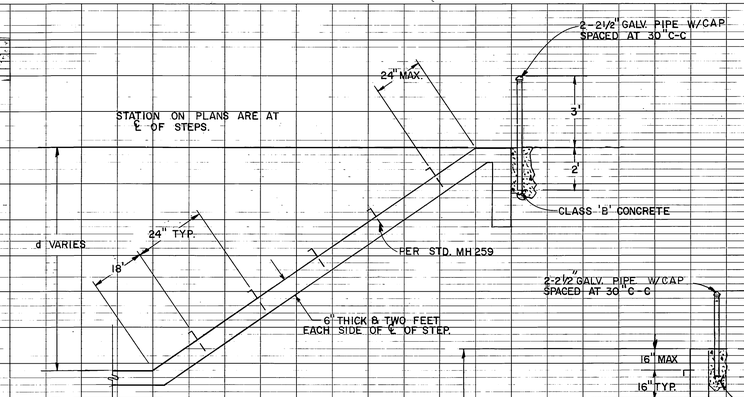

TYPICAL TRAPEZOIDAL CHANNEL LADDER

BOTH SIDES OF CHANNEL

N.T.S.

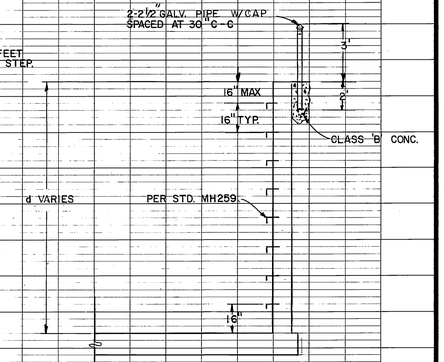

TYPICAL RECTANGULAR CHANNEL LADDER

BOTH SIDES OF CHANNEL

N.T.S.

TR. 19109

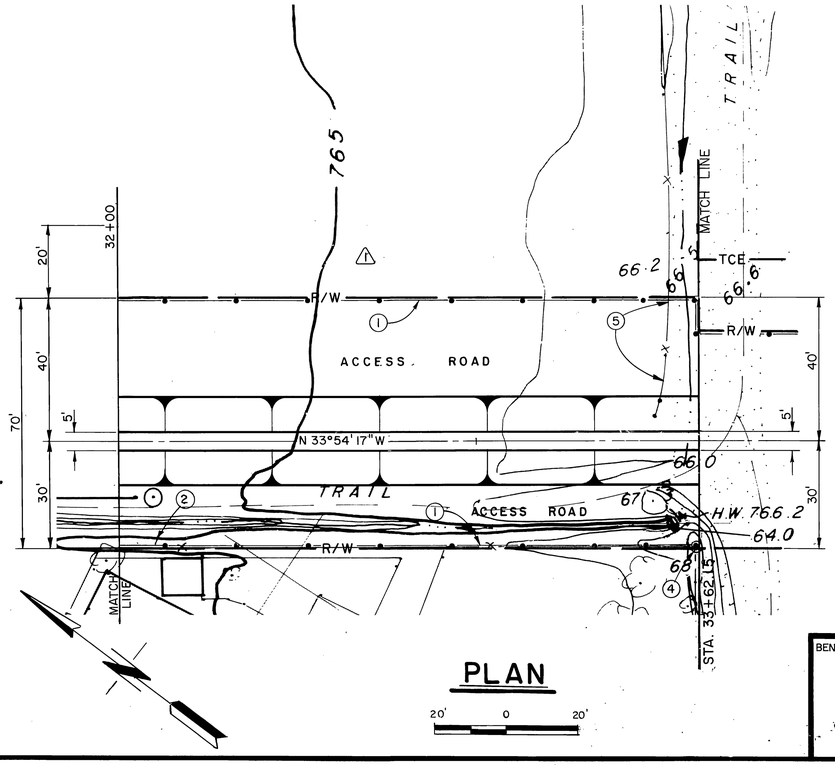

PLAN

20' 0 20'

NOTES

1. 6' CHAIN LINK FENCE.
2. PROTECT EXISTING FENCE.
3. SEE SHT. 6 FOR TYP. SECTION.
4. END FENCE. MEET EX. CONC. BLOCK WALL STA. 33+62.
5. REMOVE EX. FENCE.

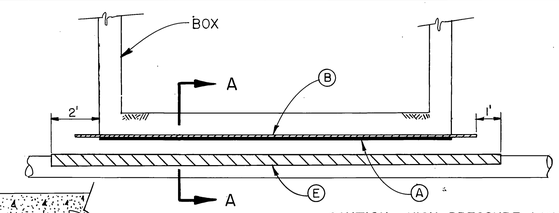

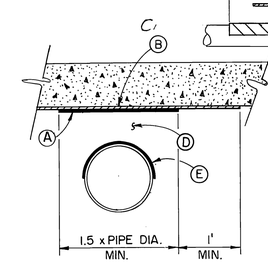

SECTION A-A

FOUR CORNERS 16" FUEL LINE PROTECTION DETAILS

N.T.S.

(SEE LINE C-4, STA. 9+48±, SHT. 16)

(A) POLYURETHANE FOAM SHALL BE FLEXIBLE 1-INCH THICK TYPE 2108 FROM UNITED FOAM INC. OR EQUAL. WIDTH SHALL BE 1½ TIMES THE OUTSIDE PIPE DIA. & CENTERED OVER THE PIPE.

C1 (B) ~~POLYURETHANE SHEETING SHALL BE 5 MILS IN THICKNESS & SHALL OVERLAP THE POLYURETHANE FOAM BY 1' MIN. ON ALL SIDES.~~ W.C.S. Used

(C) CONTRACTOR SHALL USE EXTREME CAUTION AROUND 16" H.P. FUEL LINE, CONTACT DAVE ANDERSON (213-428-9454) 48 HOURS PRIOR TO ANY WORK IN THIS AREA.

(D) BACKFILL WITH GRANULAR MATERIAL OVER 16" FUEL LINE. COMPACT TO 90%.

(E) WRAP TOP HALF OF PIPE WITH ¼" MICARTA SHEET.

F ALL MATERIALS & METHODS SUBJECT TO APPROVAL OF FOUR CORNERS PIPELINE CO.

INDEXED-CD

BENCH MARK

REVISIONS			
1	DELETED TCE	HLS	12/17/86
C1	Change Note (B) As Shown	[illegible]	9/22/87
REF.	DESCRIPTION	APPR.	DATE

RIVERSIDE COUNTY FLOOD CONTROL AND WATER CONSERVATION DISTRICT

DESIGNED BY: A.E.P
DRAWN BY: K.R.B.
DATE DRAWN: MAY 1984
CHECKED BY: F.J.P.

RECOMMENDED FOR APPROVAL BY: [signature] DESIGN ENGINEER R.E. NO. 16757 DATE: 11/14/86

APPROVED BY: [signature] CHIEF ENGINEER R.E. NO. 12400 DATE: 11-26-86

ARIZONA STREET CHANNEL
STAGE II
STA. 32+00 TO STA. 33+62.15
1970 STORM DRAIN BOND ISSUE PROJECT NO. S-8

PROJECT NO. 1-0-170
DRAWING NO. 1-447
SHEET NO. 5 OF 43

AS BUILT

D-607

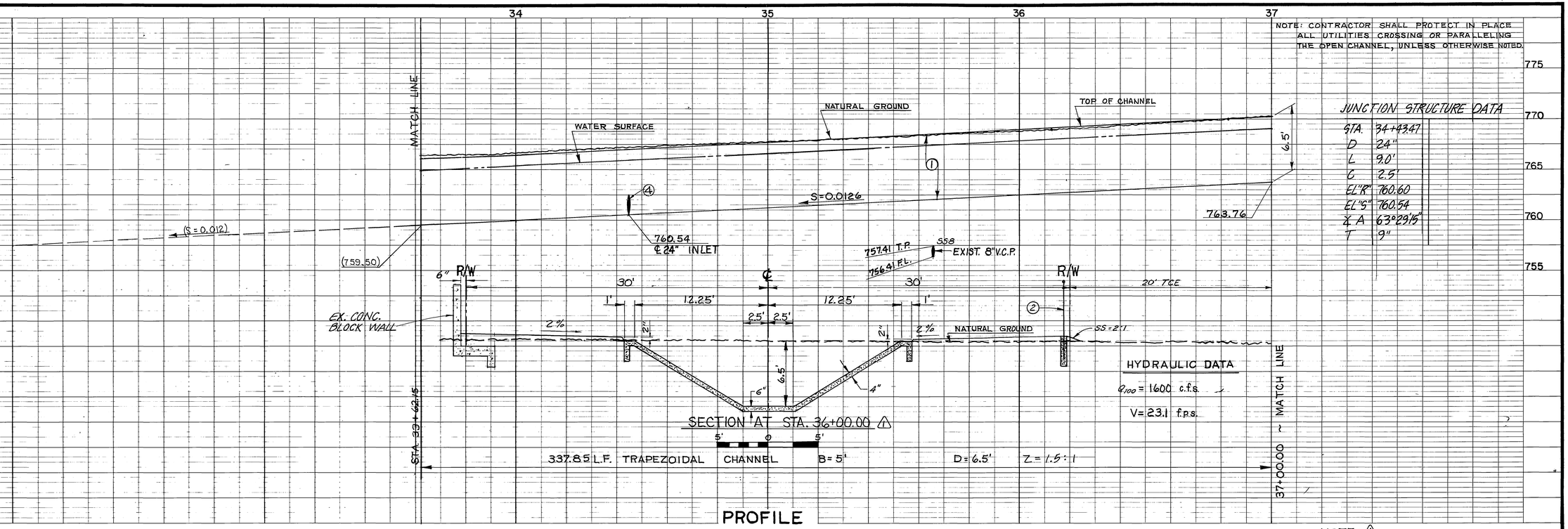

NOTE: ⚠

① CONSTRUCT 337.88 L.F. ~ 5.0'B x 6.5'D TRAPEZOIDAL CHANNEL PER DETAIL THIS PAGE & STD. CH. 326

② CONSTRUCT 6' CHAIN LINK FENCE. PER STD M 801

③ EX. 24" R.C.P. STORM DRAIN.

④ CONSTRUCT J.S. No. 6 PER R.C.F.C. STD. JS. 231. SEE DATA ABOVE. CONTRACTOR TO LOCATE EX. 24" RCP & VERIFY DATA ABOVE PRIOR TO DOING ANY WORK NEAR THIS LOCATION.

⑤ END CHAIN LINK FENCE & MEET EX. CONC. BLOCK WALL, STA. 33+62.

J. F. DAVIDSON ASSOCIATES
CIVIL ENGINEERS - SURVEYORS - PLANNERS
RIVERSIDE - COLTON - PALM DESERT - TEMECULA
686-0844
APPROVED BY [signature] DATE 11/12/85
R.E. No. 17550
JFD ASSOCIATES

BENCH MARK
FD 3/4" I.P. DN 6" W/LS 3018 S.E. COR. HOUSING TRACK AT END OF CAMBRIDGE ST.
EL 767.08

REVISIONS			
⚠	REVISED NOTES & TYP. SECTION	FJP	11/86
⚠	DELETED TCE	HLS	12/17/85
	No Change		
REF.	DESCRIPTION	APPR.	DATE

AS BUILT

RIVERSIDE COUNTY FLOOD CONTROL AND WATER CONSERVATION DISTRICT

DESIGNED BY: M.M.
DRAWN BY: B
DATE DRAWN: MAY 1984
CHECKED BY: F.J.P.

RECOMMENDED FOR APPROVAL BY: [signature]
DESIGN ENGINEER R.E. NO. 16757
DATE: 11/14/86

APPROVED BY: [signature]
CHIEF ENGINEER R.E. NO. 12400
DATE: 11-26-86

ARIZONA STREET CHANNEL
STAGE II
STA. 33+62.15 TO STA. 37+00.00
1970 STORM DRAIN BOND ISSUE PROJECT NO. S-8

PROJECT NO. 1-0-170
DRAWING NO. 1-447
SHEET NO. 6 OF 43

J.F.D. FILE 84-8383

D-607

NOTE: CONTRACTOR SHALL PROTECT IN PLACE ALL UTILITIES CROSSING OR PARALLELING THE OPEN CHANNEL, UNLESS OTHERWISE NOTED.

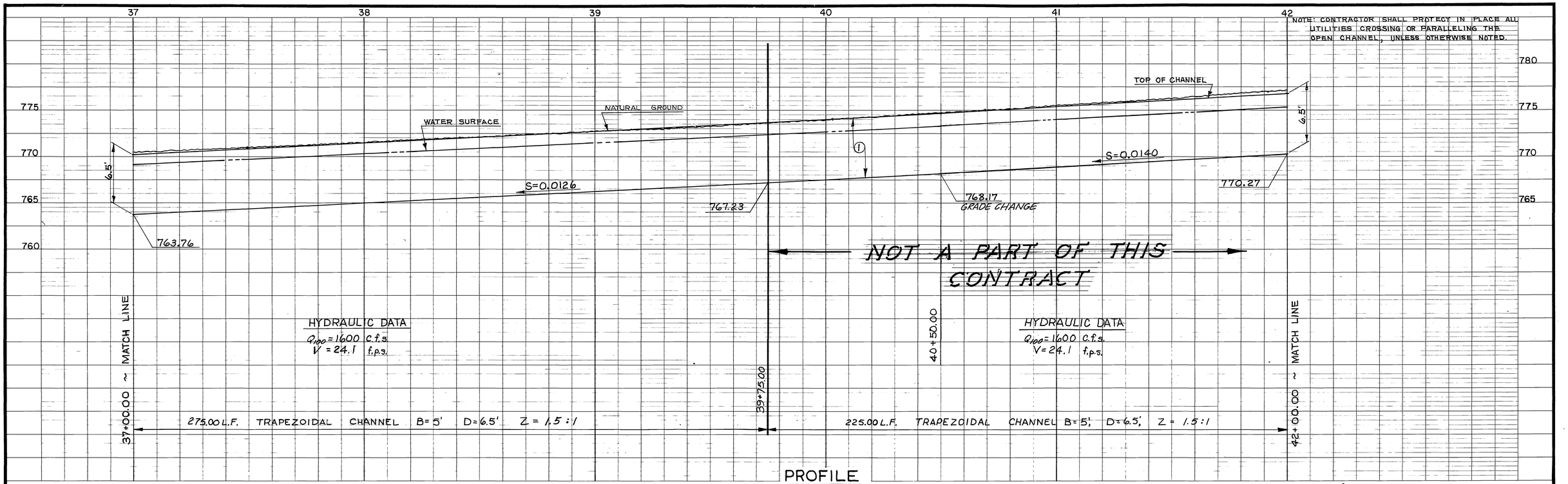

PROFILE

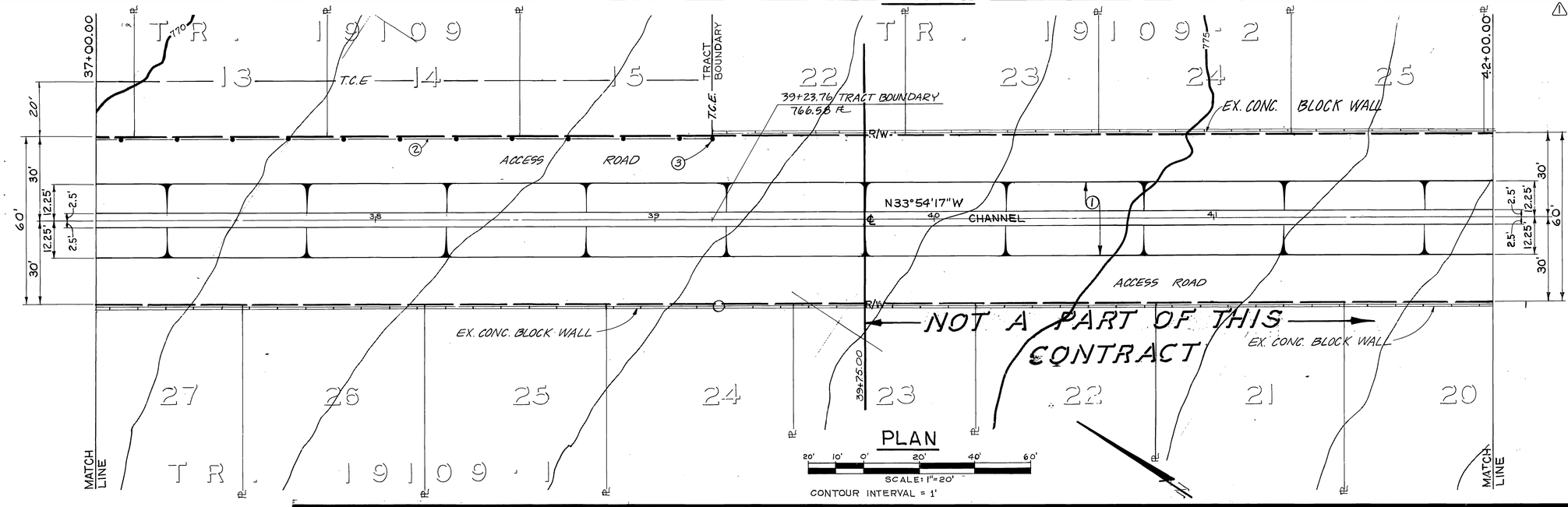

PLAN

20' 10' 0' 20' 40' 60'

SCALE: 1"=20'

CONTOUR INTERVAL = 1'

⚠ NOTE:

① CONSTRUCT 275.00 L.F. ~ 5.0'B x 6.5'D TRAPEZOIDAL CHANNEL PER DETAIL ON PAGE 6 & STD CH. 926

② CONSTRUCT 6' CHAIN LINK FENCE. PER R.C.F.C. STD. M801

③ END 6' CHAIN LINK FENCE AT EX. WALL.

4. SEE SHT. 6 FOR TYP. SECTION.

INDEXED-CD

J. F. DAVIDSON ASSOCIATES
CIVIL ENGINEERS - SURVEYORS - PLANNERS
RIVERSIDE - COLTON - PALM DESERT - TEMECULA
686-0844
JFD ASSOCIATES

APPROVED BY [signature] DATE 11/10/86
R.E. No. 17550

BENCH MARK
SET N & TBM TAG ± 2½ FEET UP ON BLOCK WALL WLY SIDE OF CHANNEL ± 200 FEET WLY OF END OF WICKLOW DR.
EL 775.40

REVISIONS			
⚠	REVISED NOTES	FJP	11/86
	No Change		
REF.	DESCRIPTION	APPR.	DATE

AS BUILT

RIVERSIDE COUNTY FLOOD CONTROL AND WATER CONSERVATION DISTRICT

DESIGNED BY: M. M.
DRAWN BY: JB
DATE DRAWN: MAY 1984
CHECKED BY: F.J.P.

RECOMMENDED FOR APPROVAL BY: [signature]
DESIGN ENGINEER R.E. NO. 16757
DATE: 11/14/86

APPROVED BY: [signature]
CHIEF ENGINEER R.E. NO. 12400
DATE: 11-26-86

ARIZONA STREET CHANNEL
STAGE II
STA. 37+00.00 TO STA. 42+00.00
1970 STORM DRAIN BOND ISSUE PROJECT NO. S-8

PROJECT NO. 1-0-170
DRAWING NO. 1-447
SHEET NO. 7 OF 43

J.F.D. FILE 84-8383

D-607

NOTE: CONTRACTOR SHALL PROTECT IN PLACE ALL UTILITIES CROSSING OR PARALLELING THE OPEN CHANNEL, UNLESS OTHERWISE NOTED.

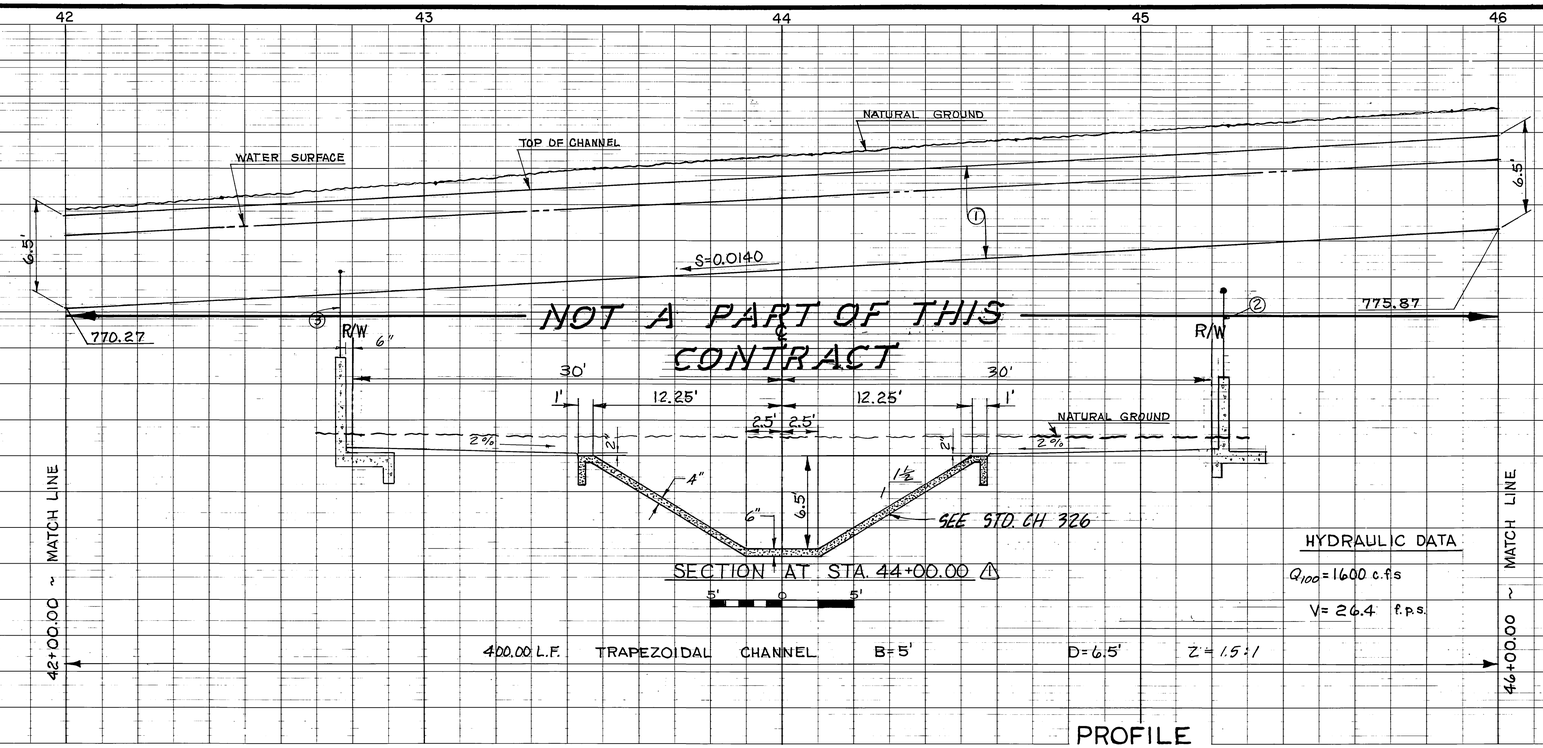

HYDRAULIC DATA

Q_{100} = 1600 c.f.s

V = 26.4 f.p.s.

PROFILE

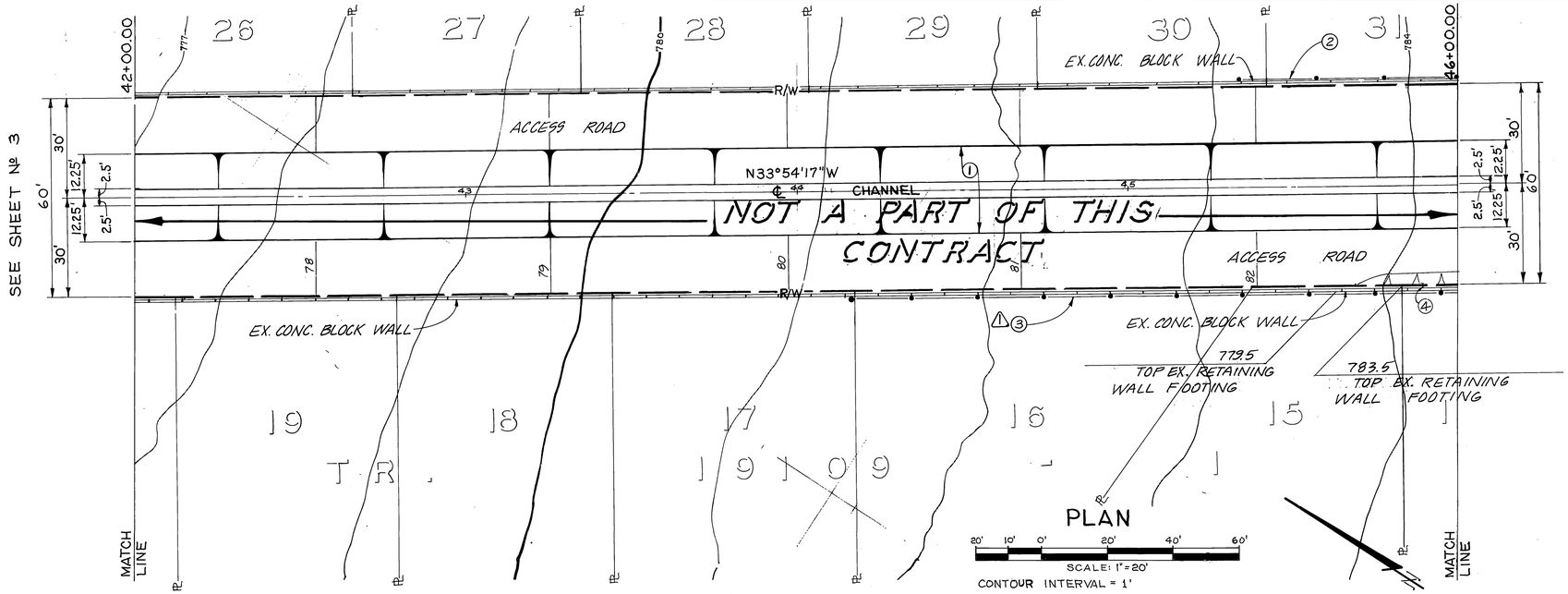

PLAN

20' 10' 0' 20' 40' 60'

SCALE: 1"=20'

CONTOUR INTERVAL = 1'

NOTE:

1. CONSTRUCT 400.00 L.F. ~ 5.0'B x 6.5'D TRAPEZOIDAL CHANNEL PER STD. DWG. CH 326 & DETAIL THIS SHEET.
2. CONSTRUCT 6' CHAIN LINK FENCE ON TOP OF EXISTING BLOCK WALL FROM STA. 45+35.00 TO STA. 46+65.00., PER STD M 801.
3. CONSTRUCT 6' CHAIN LINK FENCE ON TOP OF EXISTING BLOCK WALL FROM STA. 44+16.00 TO STA. 46+65.00., PER STD M 801.
4. PROVIDE 1' COVER OVER EXISTING RETAINING WALL FOOTINGS.

INDEXED ED

J. F. DAVIDSON ASSOCIATES
CIVIL ENGINEERS - SURVEYORS - PLANNERS
RIVERSIDE - COLTON - PALM DESERT - TEMECULA
686-0844

APPROVED BY: R.E. No. 12500 DATE: 11/26/86

JFD ASSOCIATES

BENCH MARK

SET N & TBM TAG ± 2½ FEET UP ON BLOCK WALL WLY SIDE OF CHANNEL ± 200 FEET WLY OF END OF WICKLOW DR.

EL 775.40

REVISIONS			
⚠	ADDED FENCING & REVISED TYP. SECTION	F.J.P.	11/86
	No Change		
REF.	DESCRIPTION	APPR.	DATE

AS BUILT

RIVERSIDE COUNTY FLOOD CONTROL AND WATER CONSERVATION DISTRICT

DESIGNED BY: M.M.
DRAWN BY: JB
DATE DRAWN: MAY 1984
CHECKED BY: F.J.P.

RECOMMENDED FOR APPROVAL BY: Neal L. Shelton
DESIGN ENGINEER R.E. NO. 16757
DATE: 11/14/86

APPROVED BY: Kenneth L. Edwards
CHIEF ENGINEER R.E. NO. 12400
DATE: 11-26-86

ARIZONA STREET CHANNEL
STAGE II
STA. 42+00.00 TO STA. 46+00.00

1970 STORM DRAIN BOND ISSUE PROJECT NO. S-8

PROJECT NO. 1-0-170
DRAWING NO. 1-447
SHEET NO. 8 OF 43

J.F.D. FILE 84-8363

D-607

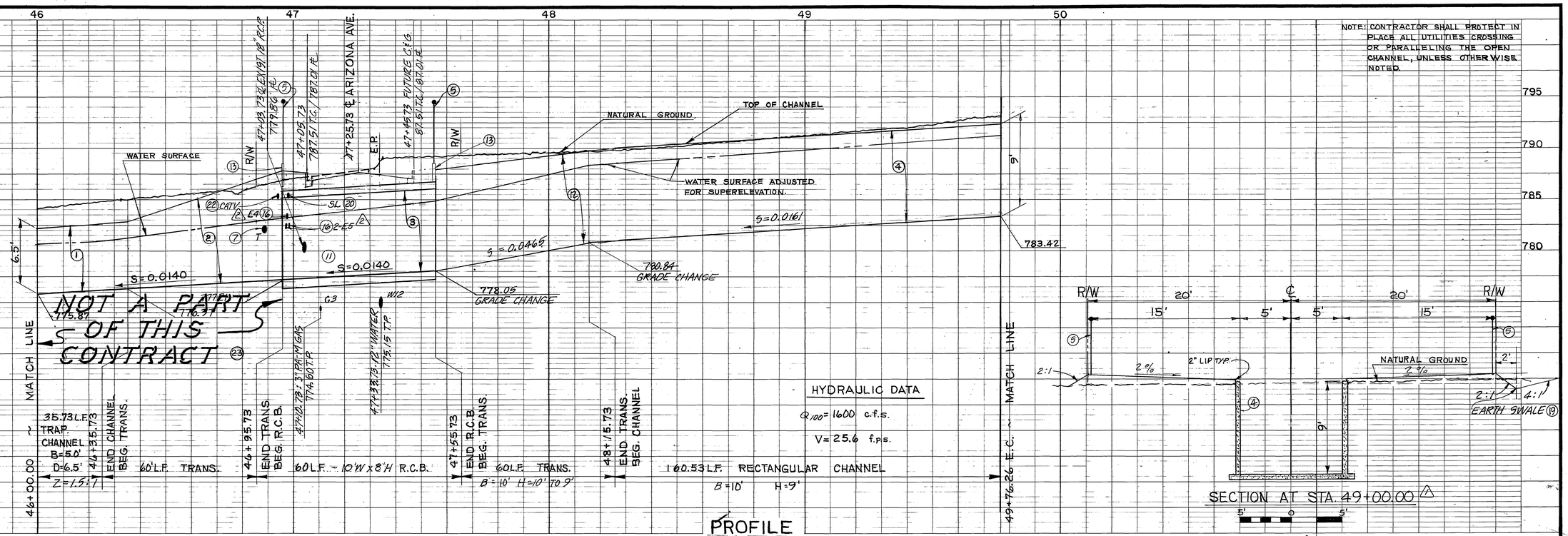

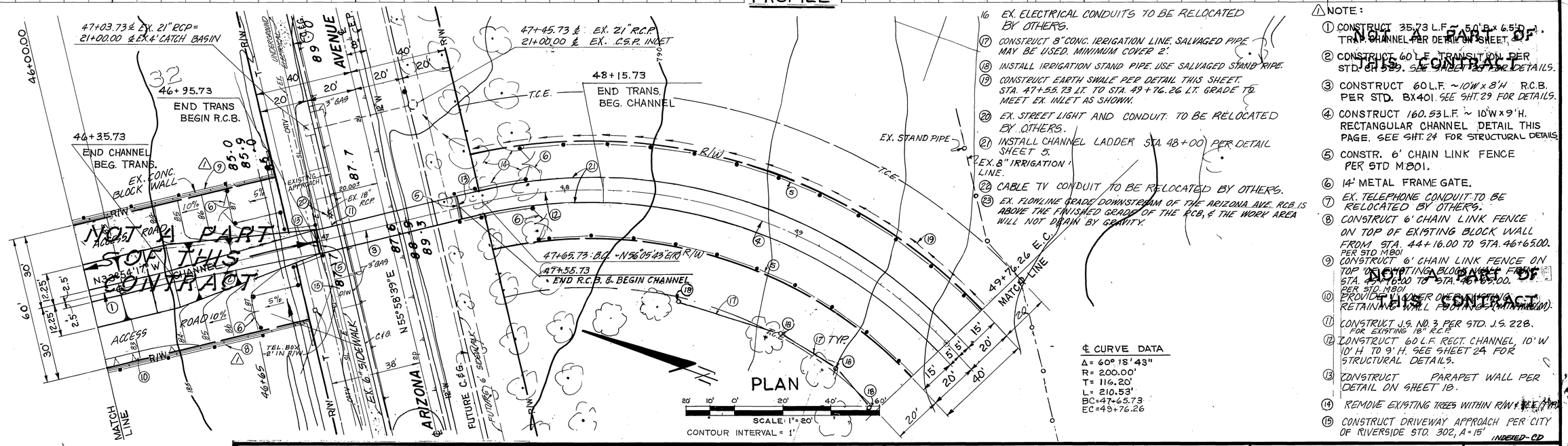

16 EX. ELECTRICAL CONDUITS TO BE RELOCATED BY OTHERS.

17 CONSTRUCT 8" CONC. IRRIGATION LINE. SALVAGED PIPE MAY BE USED. MINIMUM COVER 2'.

18 INSTALL IRRIGATION STAND PIPE. USE SALVAGED STAND PIPE.

19 CONSTRUCT EARTH SWALE PER DETAIL THIS SHEET. STA. 47+55.73 L.T. TO STA. 49+76.26 L.T. GRADE TO MEET EX. INLET AS SHOWN.

20 EX. STREET LIGHT AND CONDUIT TO BE RELOCATED BY OTHERS.

21 INSTALL CHANNEL LADDER STA. 48+00 PER DETAIL SHEET 5.

22 CABLE TV CONDUIT TO BE RELOCATED BY OTHERS.

23 EX. FLOWLINE GRADE DOWNSTREAM OF THE ARIZONA AVE. RCB IS ABOVE THE FINISHED GRADE OF THE RCB, & THE WORK AREA WILL NOT DRAIN BY GRAVITY.

(A) NOTE:

1. CONSTRUCT 35.73 L.F. ~ 50'B x 6.5'D TRAP. CHANNEL PER DETAIL ON SHEET 24.
2. CONSTRUCT 60' L.F. TRANSITION PER STD. CH 539. SEE SHEET 29 FOR DETAILS.
3. CONSTRUCT 60 L.F. ~ 10'W x 8'H R.C.B. PER STD. BX401. SEE SHT. 29 FOR DETAILS.
4. CONSTRUCT 160.53 L.F. ~ 10'W x 9'H. RECTANGULAR CHANNEL DETAIL THIS PAGE. SEE SHT. 24 FOR STRUCTURAL DETAILS.
5. CONSTR. 6' CHAIN LINK FENCE PER STD M801.
6. 14' METAL FRAME GATE.
7. EX. TELEPHONE CONDUIT TO BE RELOCATED BY OTHERS.
8. CONSTRUCT 6' CHAIN LINK FENCE ON TOP OF EXISTING BLOCK WALL FROM STA. 44+16.00 TO STA. 46+65.00. PER STD M801
9. CONSTRUCT 6' CHAIN LINK FENCE ON TOP OF EXISTING BLOCK WALL FROM STA. 46+76.00 TO STA. 46+85.00. PER STD M801
10. PROVIDE 2' LOWER OVER EXISTING RETAINING WALL FOOTING (MINIMUM).
11. CONSTRUCT J.S. NO. 3 PER STD. J.S. 228. FOR EXISTING 18" R.C.P.
12. CONSTRUCT 60 L.F. RECT. CHANNEL 10' W 10' H TO 9' H. SEE SHEET 24 FOR STRUCTURAL DETAILS.
13. CONSTRUCT PARAPET WALL PER DETAIL ON SHEET 18.
14. REMOVE EXISTING TREES WITHIN R/W & ICE PITS.
15. CONSTRUCT DRIVEWAY APPROACH PER CITY OF RIVERSIDE STD. 302, A = 15'

NOT A PART OF THIS CONTRACT

INDEXED-CD

J. F. DAVIDSON ASSOCIATES
CIVIL ENGINEERS - SURVEYORS - PLANNERS
RIVERSIDE - COLTON - PALM DESERT - TEMECULA
686-0844
JFD ASSOCIATES
APPROVED BY [signature] R.E. No. 12550 DATE 11/14/86

BENCH MARK
FD 1" I.P. W/LS 3018
PLUG FLUSH INT. ARIZONA AVE. AND WICKLOW DR.
EL 787.58

REVISIONS			
1	REVISED NOTES, TYP. SECTION & FENCING	FJP	11/86
2	ADDED UTILITIES	FJP	11/86
	No Change		
REF.	DESCRIPTION	APPR.	DATE

RIVERSIDE COUNTY FLOOD CONTROL AND WATER CONSERVATION DISTRICT

DESIGNED BY: M.M.
DRAWN BY: JB
DATE DRAWN: MAY 1984
CHECKED BY: F.J.P.

RECOMMENDED FOR APPROVAL BY: [signature] DESIGN ENGINEER R.E. NO. 16757 DATE: 11/14/86

APPROVED BY: [signature] CHIEF ENGINEER R.E. NO. 12400 DATE: 11-26-86

ARIZONA STREET CHANNEL
STAGE II
STA. 46+00.00 TO STA. 49+76.26
1970 STORM DRAIN BOND ISSUE PROJECT NO. S-8

PROJECT NO. 1-0-170
DRAWING NO. 1-447
SHEET NO. 9 OF 43

AS BUILT

J.F.D. FILE 84-8583

D-607

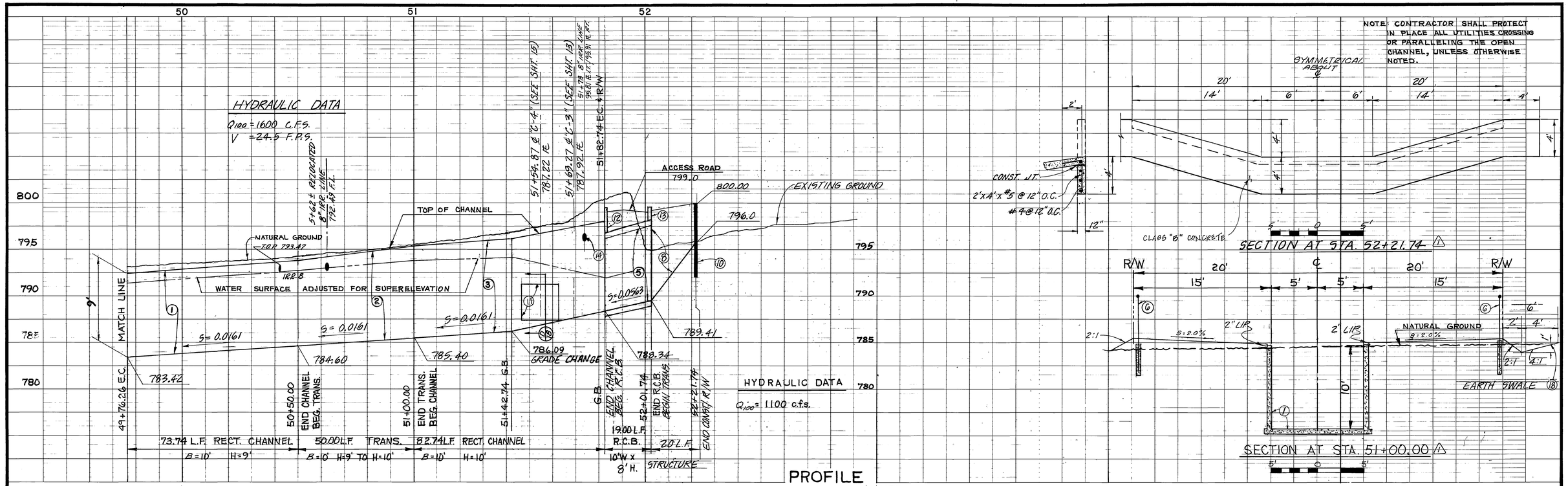

NOTE:

1. CONSTRUCT 73.74 L.F. ~ 10'W x 9'H RECTANGULAR CHANNEL PER DETAIL THIS PAGE. SEE SHEET 24 FOR STRUCTURAL DETAILS.
2. CONSTRUCT 50.00 L.F. TRANSITION 10'W x 9'H TO 10'H PER STD. CH327. SEE SHT. 24 FOR STRUCTURAL DETAILS.
3. CONSTRUCT 82.74 L.F. ~ 10'W x 10'H RECTANGULAR CHANNEL PER STD. CH327. SEE SHT 24 FOR STRUCTURAL DETAILS.
4. REMOVE AND SALVAGE EX. IRRIGATION STANDPIPES.
5. CONSTRUCT 19.00 L.F. ~ 8'H x 10'W R.C.B. PER STD. BX401. SEE SHT. 20 FOR STRUCTURAL DETAILS.
6. CONSTR. 6' CHAIN LINK FENCE, PER STD M.801
7. CONNECT TO EX. STANDPIPE.
8. CONSTRUCT 20 L.F. TRANSITION PER STD. CH 329, SEE SHEET 26 FOR DETAILS.
9. FILL EXISTING CHANNEL.
10. CONSTRUCT 4' CUTOFF WALL PER DETAIL THIS SHEET.
11. CONSTRUCT R.C.B. TO CHANNEL JUNCTION PER DETAIL ON SHEET 18.
12. CONSTRUCT 2'6" PARAPET WALL PER DETAIL ON SHEET 18.
13. CONSTRUCT 1'6" PARAPET WALL PER DETAIL ON SHEET 18.
14. REMOVE EXISTING 8" CONC. IRR. PIPE. INSTALL 60 LF OF 8" 12 GAGE STEEL PIPE. USED PIPE MAY BE USED SUBJECT TO THE APPROVAL OF THE ENGINEER. SEE SPECIFICATIONS.
15. REMOVE EXISTING 8" CONC. IRR. PIPE. INSTALL 150' L.F. OF 8" 12 GAGE STEEL PIPE. USED PIPE MAY BE USED SUBJECT TO THE APPROVAL OF THE ENGINEER. SEE SPECIFICATIONS.
16. CONSTRUCT 8" CONC. IRR. LINE, SALVAGED PIPE MAY BE USED. MIN. COVER 2'. SEE SPECIFICATIONS.
17. INSTALL IRR. STAND PIPE. SALVAGED STAND PIPES MAY BE USED. SEE SPECIFICATIONS.
18. CONSTRUCT EARTH SWALE PER DETAIL THIS SHEET. STA. 49+76.26 RT. TO STA. 51+00.00 RT.
19. INSTALL CALTRANS TYPE E-1 DELINEATORS AT 10' C-C EACH SIDE OF CHANNEL (6 TOTAL)

J. F. DAVIDSON ASSOCIATES
CIVIL ENGINEERS - SURVEYORS - PLANNERS
RIVERSIDE - COLTON - PALM DESERT - TEMECULA
686-0844
JFD ASSOCIATES
APPROVED BY _____ DATE 11/12/86
R.E. No. 17550

BENCH MARK
SET CHIS BOX ON CONC. STAND PIPE NLY SIDE OF CANAL & STA. 1+65± LINE C-4
EL. 798.98

REVISIONS			
⚠	REVISED NOTES, TYP. SECTION, CUTOFF WALL & IRRIG. SYSTEM RELOCATION	F.J.P.	11/86
	No Change		
REF.	DESCRIPTION	APPR.	DATE

RIVERSIDE COUNTY FLOOD CONTROL AND WATER CONSERVATION DISTRICT

DESIGNED BY: M.M.
DRAWN BY: JB
DATE DRAWN: MAY 1984
CHECKED BY: F.J.P.

RECOMMENDED FOR APPROVAL BY: _____ DESIGN ENGINEER R.E. NO. 16757 DATE: 11/14/86

APPROVED BY: _____ CHIEF ENGINEER R.E. NO. 12400 DATE: 11-26-86

ARIZONA STREET CHANNEL
STAGE II
STA. 49+76.26 TO STA. 52+21.74
1970 STORM DRAIN BOND ISSUE PROJECT NO. S-8

PROJECT NO. 1-0-170
DRAWING NO. 1-447
SHEET NO. 10 OF 43

AS BUILT

J.F.D. FILE 84-8383

D-607

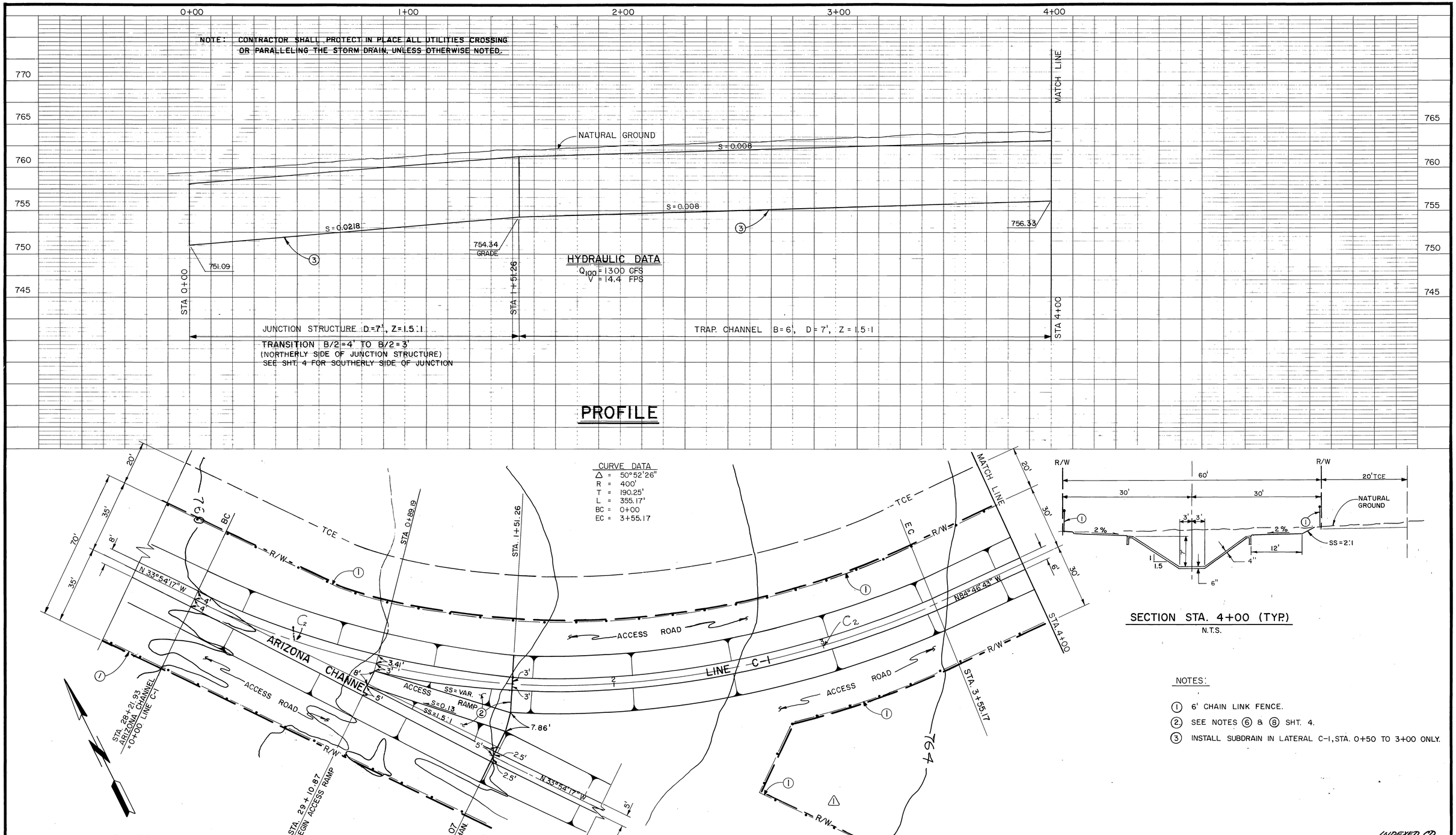

NOTES:

1. 6' CHAIN LINK FENCE.
2. SEE NOTES 6 & 8 SHT. 4.
3. INSTALL SUBDRAIN IN LATERAL C-1, STA. 0+50 TO 3+00 ONLY.

INDEXED CD

BENCH MARK	REVISIONS			
	1	DELETED TCE	HLS 12/17/86	
	C2	Sta 0+50 Start Sub Drain As Shown	JOS	9/22/87
	C2	Sta. 3+00 End Sub Drain " "	JOS	9/22/87
	REF.	DESCRIPTION	APPR.	DATE

RIVERSIDE COUNTY FLOOD CONTROL AND WATER CONSERVATION DISTRICT

DESIGNED BY: A.E.P.
DRAWN BY: Pam
DATE DRAWN: 8-6-86
CHECKED BY: F.J.P.

RECOMMENDED FOR APPROVAL BY: DESIGN ENGINEER R.E. NO. 16757 DATE: 11/14/86

APPROVED BY: CHIEF ENGINEER R.E. NO. 12400 DATE: 11-26-86

ARIZONA STREET CHANNEL
LINE "C-1"
STA 0+00 TO STA. 4+00

PROJECT NO. 1-0-171
DRAWING NO. 1-447
SHEET NO. 11 OF 43

AS BUILT

D-607

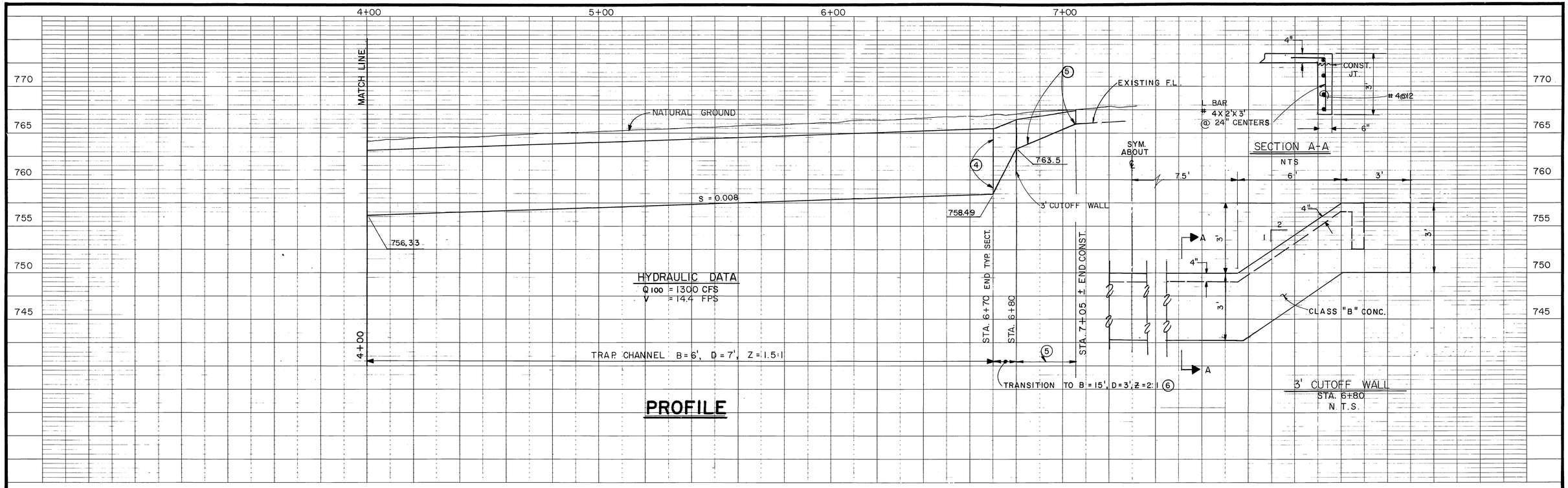

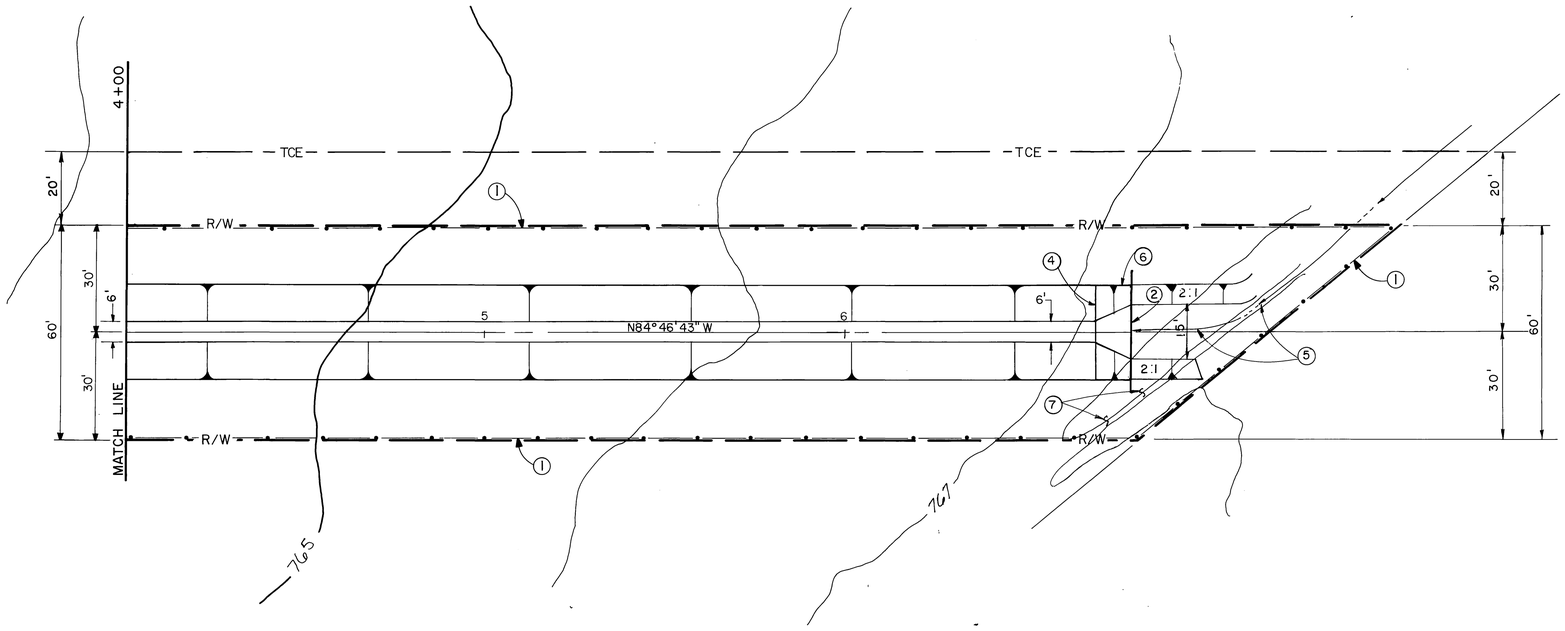

NOTES:

1. 6' CHAIN LINK FENCE
2. 3' CUTOFF WALL
3. SEE SHT. 11 FOR TYPICAL SECTION.
4. CONSTRUCT KEYED CONSTRUCTION JT. THICKEN SLOPE PAVING AND INVERT TO 6" MINIMUM 1' EACH SIDE OF JOINT.
5. GRADE TO DAYLIGHT AT EXIST DITCH.
6. TEMPORARY INLET TRANSITION TO HAVE 4" CONCRETE THICKNESS IN INVERT AND SIDE SLOPES.
7. FILL EXISTING DITCH.

PLAN

20' 0 20'

INDEXED CD

BENCH MARK	REVISIONS			RIVERSIDE COUNTY FLOOD CONTROL AND WATER CONSERVATION DISTRICT			ARIZONA STREET CHANNEL LINE "C-1"	PROJECT NO. 1-0-171
				DESIGNED BY: A.E.P	RECOMMENDED FOR APPROVAL BY:	APPROVED BY:	STA. 4+00 TO STA. 7+00	DRAWING NO. 1-447
				DRAWN BY: Pam	DESIGN ENGINEER R.E. NO. 16757	CHIEF ENGINEER R.E. NO. 12400		SHEET NO. 12 OF 43
				DATE DRAWN: 8-7-86	DATE: 11/14/86	DATE: 11-26-86		
	No Change			CHECKED BY: F.J.R.				
	REF. DESCRIPTION	APPR.	DATE					

AS BUILT

D-607

NOTE : CONTRACTOR SHALL PROTECT IN PLACE ALL UTILITIES CROSSING OR PARALLELING THE OPEN CHANNEL, UNLESS OTHERWISE NOTED.

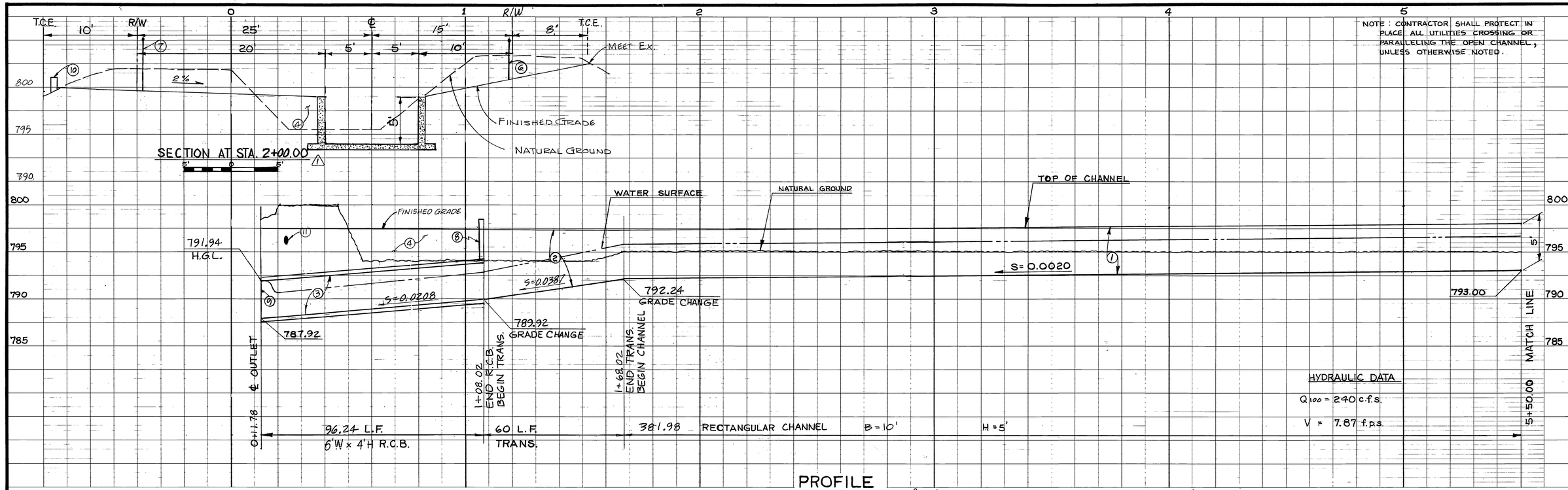

PROFILE

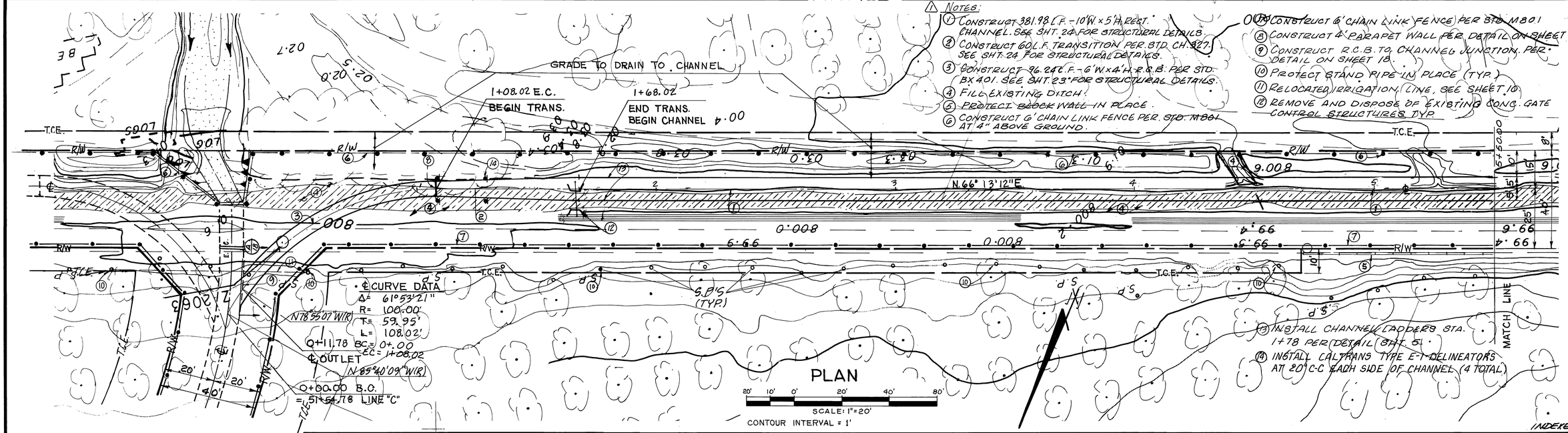

PLAN

△ NOTES:

1. CONSTRUCT 381.98 L.F. - 10'W x 5'H REST. CHANNEL. SEE SHT. 24 FOR STRUCTURAL DETAILS.
2. CONSTRUCT 60 L.F. TRANSITION PER STD. CH. 827. SEE SHT. 24 FOR STRUCTURAL DETAILS.
3. CONSTRUCT 96.24 L.F. - 6'W x 4'H R.C.B. PER STD. BX 401. SEE SHT. 23 FOR STRUCTURAL DETAILS.
4. FILL EXISTING DITCH.
5. PROTECT BLOCK WALL IN PLACE.
6. CONSTRUCT 6' CHAIN LINK FENCE PER STD. M801 AT 4" ABOVE GROUND.
7. CONSTRUCT 6' CHAIN LINK FENCE PER STD. M801
8. CONSTRUCT 4' PARAPET WALL PER DETAIL ON SHEET 18.
9. CONSTRUCT R.C.B. TO CHANNEL JUNCTION. PER DETAIL ON SHEET 18.
10. PROTECT STAND PIPE IN PLACE (TYP.)
11. RELOCATED IRRIGATION LINE, SEE SHEET 10.
12. REMOVE AND DISPOSE OF EXISTING CONC. GATE CONTROL STRUCTURES TYP.
13. INSTALL CHANNEL LADDERS STA. 1+78 PER DETAIL (SHT. 5).
14. INSTALL CALTRANS TYPE E-1 DELINEATORS AT 80' C.C. EACH SIDE OF CHANNEL (4 TOTAL).

INDEXED-CD

AS BUILT

J. F. DAVIDSON ASSOCIATES
CIVIL ENGINEERS - SURVEYORS - PLANNERS
RIVERSIDE - COLTON - PALM DESERT - TEMECULA
686-0844
APPROVED BY: [signature] DATE 11/16/86
R.E. No. 17550

JFD ASSOCIATES

BENCH MARK
'FD CHIS BOX ON ELY END BLOCK WALL NLY SIDE OF CANAL ± STA. 4+50
EL. 800.36

REVISIONS			
△	REVISED NOTES & TYP. SECTION	FJP	11/86
	No Change		
REF.	DESCRIPTION	APPR	DATE

RIVERSIDE COUNTY FLOOD CONTROL AND WATER CONSERVATION DISTRICT

DESIGNED BY: M.M.
DRAWN BY: JB
DATE DRAWN: MAY 1984
CHECKED BY: F.J.P.

RECOMMENDED FOR APPROVAL BY: [signature]
DESIGN ENGINEER R.E. NO. 16757
DATE: 11/14/86

APPROVED BY: [signature]
CHIEF ENGINEER R.E. NO. 12400
DATE: 11-26-86

ARIZONA STREET CHANNEL
LINE "C-3"
STA. 0+12.73 TO STA. 5+50.00
1970 STORM DRAIN BOND ISSUE PROJECT NO. S-8

PROJECT NO. 1-0-172
DRAWING NO. 1-447
SHEET NO. 13 OF 43

J.F.D. FILE 84-6382

D-607

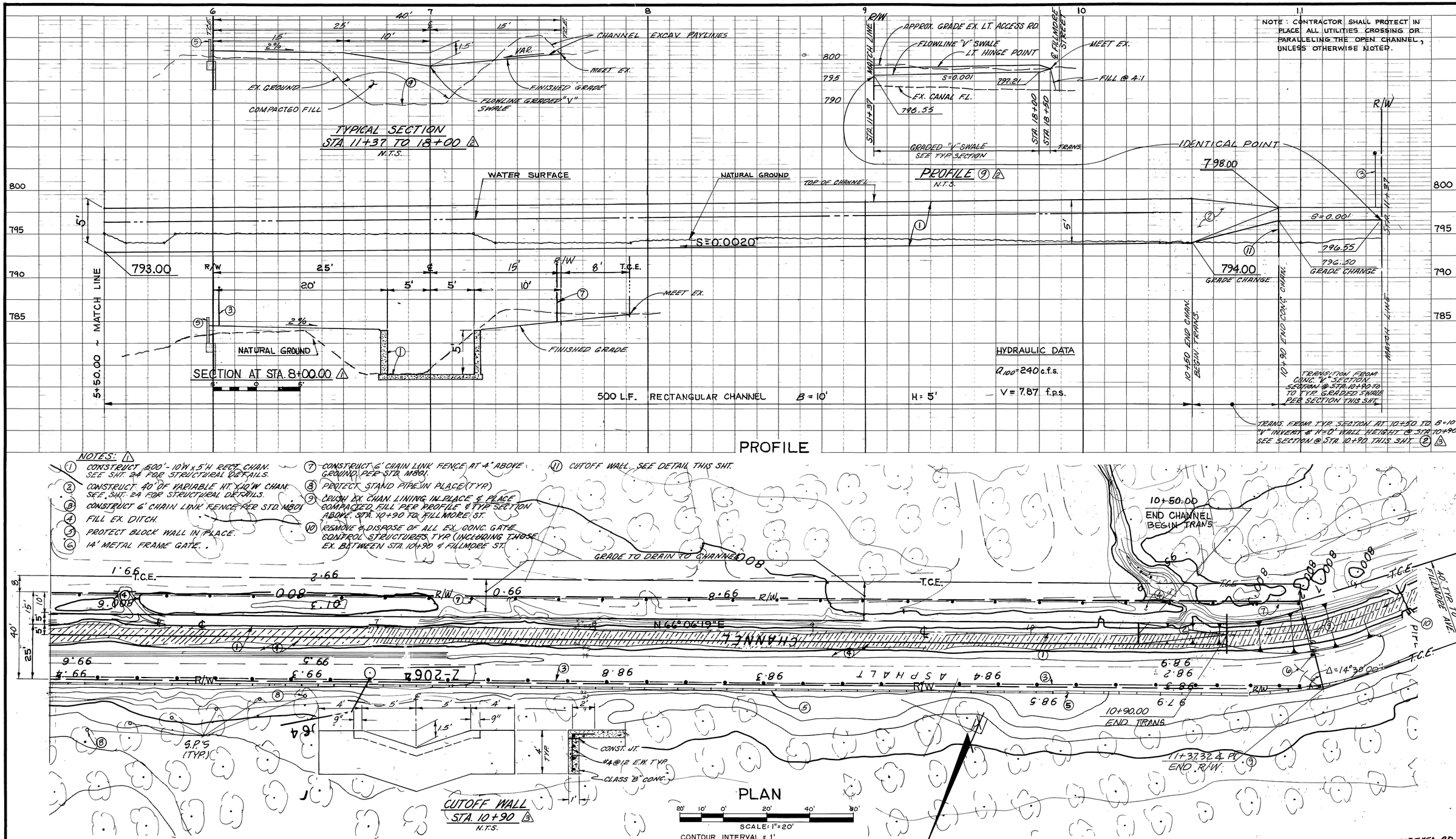

INDEXED CD

J. F. DAVIDSON ASSOCIATES
CIVIL ENGINEERS - SURVEYORS - PLANNERS
RIVERSIDE - COLTON - PALM DESERT - TEMECULA
686-0844
APPROVED BY John W. Carty DATE 11/12/85
R.E. No. 17556
JFD ASSOCIATES

BENCH MARK
SET CHIS BOX ON BLOCK WALL NLY SIDE OF CANAL ± STA. 10+60 LINE C-3
ELEV. 800.35

REVISIONS			
1	REVISED NOTES & TYP. SECTION	F.J.P.	11/86
2	ADDED GRADING TO FILMORE AVE.	F.J.P.	11/86
3	REVISED TRANSITION STA 10+50 TO STA 10+90 AND CUTOFF WALL.	F.J.P.	11/86
	No Change		
REF.	DESCRIPTION	APPR.	DATE

RIVERSIDE COUNTY FLOOD CONTROL AND WATER CONSERVATION DISTRICT

DESIGNED BY: M.M.
DRAWN BY: JS
DATE DRAWN: MAY 1984
CHECKED BY: F.J.P.

RECOMMENDED FOR APPROVAL BY: [signature]
DESIGN ENGINEER R.E. NO. 16757
DATE: 11/14/86

APPROVED BY: Kenneth P. Edwards
CHIEF ENGINEER R.E. NO. 12400
DATE: 11-26-86

ARIZONA STREET CHANNEL
LINE "C-3"
STA. 5+50.00 TO STA. 10+90.00
1970 STORM DRAIN BOND ISSUE PROJECT NO. S-8

PROJECT NO. 1-0-172
DRAWING NO. 1-447
SHEET NO. 14 OF 43

AS BUILT

J.F.D. FILE 84-8383

D-607

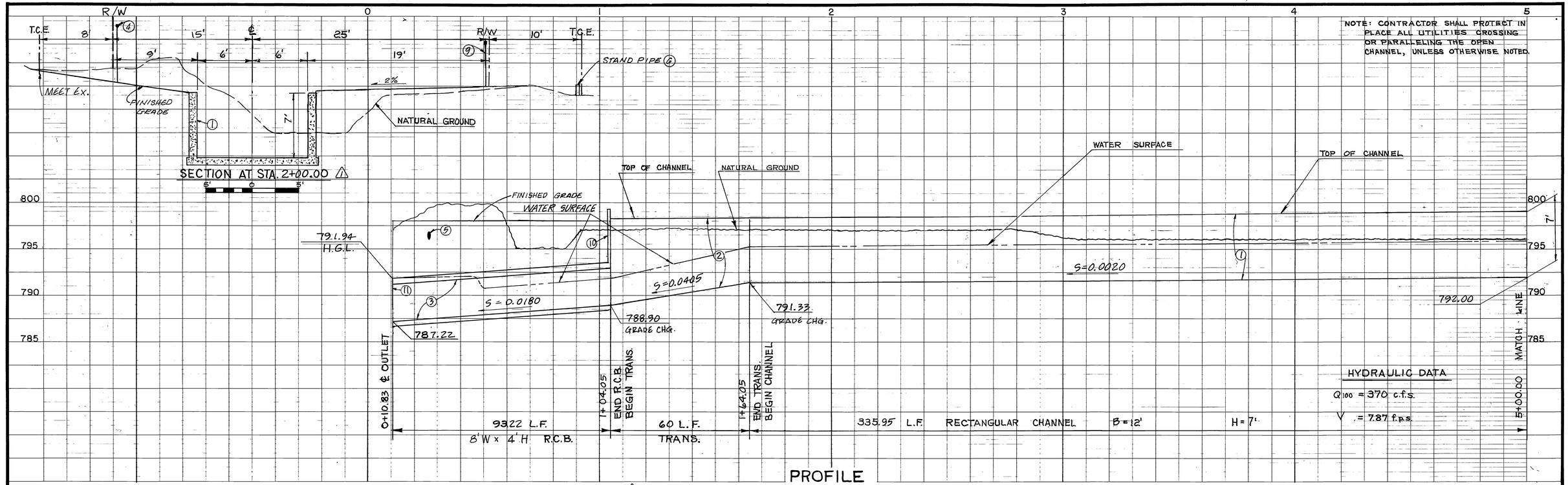

PROFILE

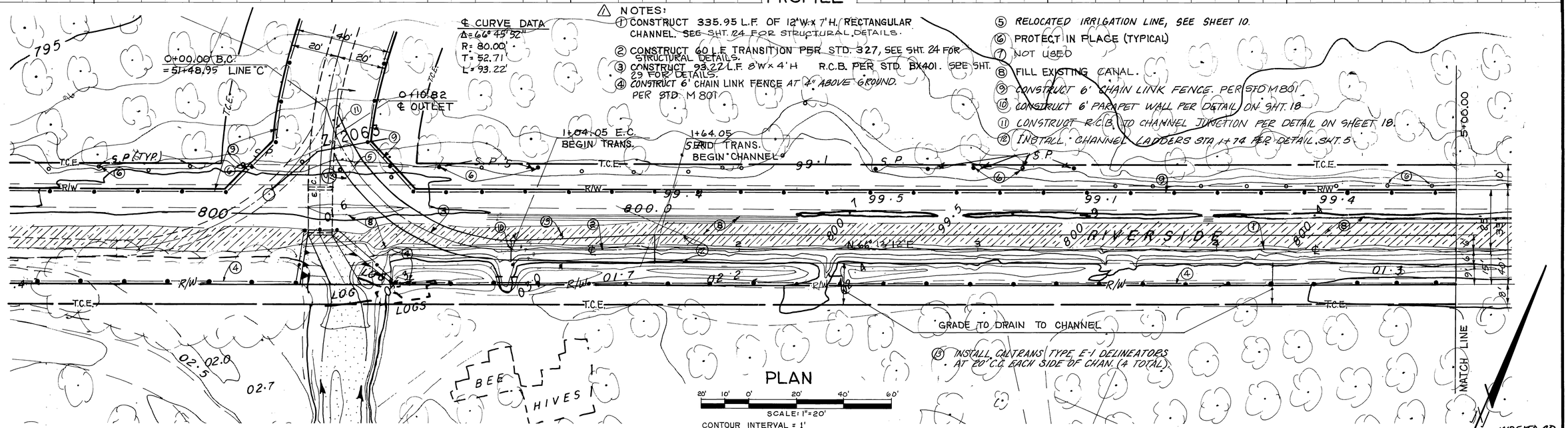

PLAN

20' 10' 0' 20' 40' 60'
SCALE: 1"=20'
CONTOUR INTERVAL = 1'

AS BUILT

J. F. DAVIDSON ASSOCIATES
CIVIL ENGINEERS - SURVEYORS - PLANNERS
RIVERSIDE - COLTON - PALM DESERT - TEMECULA
686-0844
APPROVED BY [signature] DATE 11/12/85
R.E. No. 17550
JFD ASSOCIATES

BENCH MARK
SET CHIS BOX ON CONC. STAND PIPE N'LY SIDE OF CHANNEL ± STA. 1+65 LINE C-4
EL. 798.98

REVISIONS			
⚠	REVISED NOTES & TYP. SECTIONS	F.J.P.	11/86
REF.	DESCRIPTION	APPR	DATE

DESIGNED BY: M.M.
DRAWN BY: JB
DATE DRAWN: MAY 1984
CHECKED BY: F.J.P.

RIVERSIDE COUNTY FLOOD CONTROL AND WATER CONSERVATION DISTRICT

RECOMMENDED FOR APPROVAL BY: [signature] DESIGN ENGINEER R.E. NO. 16757 DATE: 11/14/86

APPROVED BY: [signature] CHIEF ENGINEER R.E. NO. 12400 DATE: 11-26-86

ARIZONA STREET CHANNEL
LINE "C-4"
STA. 0+10.82 TO STA. 5+00.00
1970 STORM DRAIN BOND ISSUE PROJECT NO. S-8

PROJECT NO. 1-0-172
DRAWING NO. 1-447
SHEET NO. 15 OF 43

J.F.D. FILE 84-8383

D-607

NOTE: CONTRACTOR SHALL PROTECT IN PLACE ALL UTILITIES CROSSING OR PARALLELING THE OPEN CHANNEL, UNLESS OTHERWISE NOTED.

SECTION AT STA. 10+38.06

SECTION AT STA. 7+00.00

PROFILE
VERT: 1"=5'

HYDRAULIC DATA
Q100 = 370 c.f.s.
V = 7.87 f.p.s.

388.06 L.F. RECTANGULAR CHANNEL B = 12' H = 7'

110 L.F. 12'W x 6' H. R.C.B.

40 L.F. TRANS. STRUCT.

CAUTION
16" HIGH PRESSURE PETROLEUM PIPELINE - BEFORE DIGGING
Phone Collect (213) 428-3519
Att: GUY CASTRO (213) 428-9455
DICK MARSTON (213) 428-9220

PLAN
SCALE: 1"=20'
CONTOUR INTERVAL = 1'

NOTES:
1. CONSTRUCT 388.06 L.F. OF 12' W. x 7' H RECTANGULAR CHANNEL. SEE SHT. 24 FOR STRUCTURAL DETAILS
2. CONSTR. 6' CHAIN LINK FENCE AT 4" ABOVE GROUND PER STD M 801.
3. 14' METAL FRAME GATE.
4. CONSTRUCT 2'-0" PARAPET WALL SEE DETAIL ON SHT. 18.
5. CONSTRUCT 40 L.F. TRANSITION STRUCTURE PER STD. CH. 329. SEE SHT. 24 FOR DETAIL.
6. FILL EXISTING CANAL.
7. CONSTRUCT 4' CUT OFF WALL PER DETAIL THIS SHT.
8. CONSTRUCT 6' CHAIN LINK FENCE PER STD M 801
9. PROTECT STAND PIPE IN PLACE (TYP)
(CONT'D LOWER LEFT)

NOTES: (CONT'D)
10. CONSTRUCT 110 L.F. R.C.B. PER SHEETS 41 & 42. SPAN = 12' HEIGHT = 6', MAX. EARTH COVER = 10'
11. CONSTRUCT J.S. NO. 3 PER STD. # J.S./228. BLOCK OUT OPENING FOR FUTURE 24" R.C.P. CLOSE OPENING WITH TEMPORARY CONC. BULKHEAD PER STD. M 813.
12. REMOVE EX. BOX, HEADWALLS AND RAILINGS
13. PLACE 40 ± 12" RCP (S = 0.01) E 788 AT ℄ CHANNEL. CAPS. ENDS.
14. PROTECT EXISTING WALL/FENCE IN PLACE.
15. SEE PROTECTION DETAIL FOR HIGH PRESSURE OIL LINE SHT. 5
16. WATER LINE TO BE INSTALLED BY OTHERS AFTER REMOVAL OF EX. BOX. SEE SPECS.
17. CONST. SINGLE 8'W x 6'H CHAIN LINK GATE.
18. PROTECT TREES IN TCE.
19. INSTALL CHANNEL LADDERS STA. 8+70 PER DETAIL SHT. 5

Concordia Development Corp. connected one 24" RCP at Sta. 8+98.41 see Encroachment Permit No. 1-0-492-1479

AS BUILT

J. F. DAVIDSON ASSOCIATES	BENCH MARK	REVISIONS			RIVERSIDE COUNTY FLOOD CONTROL AND WATER CONSERVATION DISTRICT	ARIZONA STREET CHANNEL	PROJECT NO.
CIVIL ENGINEERS - SURVEYORS - PLANNERS	SET RR SPIKE IN POLE N.E. CORNER OF CANAL AND LA SIERRA AVE.	1 Revised Notes, Cut-off Wall & Typ. Section	F.J.P.	11/86	DESIGNED BY: M.M.	LINE "C-4"	1-0-172
RIVERSIDE - COLTON - PALM DESERT, - TEMECULA 686-0844		2 Added Dry Sewer	F.J.P.	11/86	DRAWN BY: JB	STA. 5+00.00 TO STA. 10+38.06	DRAWING NO. 1-447
APPROVED BY [signature] R.E. No. 17530 DATE 11/12/86	EL. 800.81	3 Modified Fencing & Added TCE	F.J.P.	11/86	DATE DRAWN: MAY 1984	1970 STORM DRAIN BOND ISSUE PROJECT NO. S-8	SHEET NO. 16 OF 43
JFD ASSOCIATES		C3 Sta. 10+38.09 EX. F.L.E.L. Changed	[illegible]	9/22/87	CHECKED BY: F.J.P.		
		REF. DESCRIPTION	APPR.	DATE			

RECOMMENDED FOR APPROVAL BY: [signature] DESIGN ENGINEER R.E. NO. 16757 DATE: 11/14/86

APPROVED BY: [signature] CHIEF ENGINEER R.E. NO. 12400 DATE: 11-26-86

J.F.D. FILE 84-8383

D-607

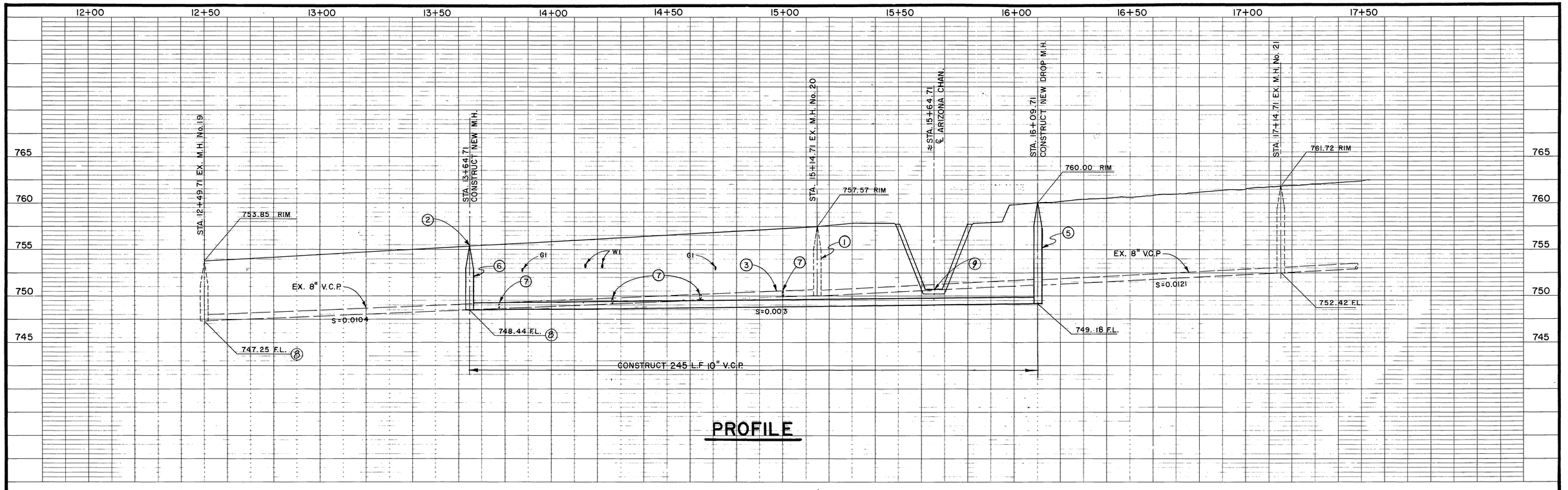

1. REMOVE & SALVAGE EX. MANHOLE.
2. ADJUST RIM EL. TO FIT STREET GRADE.
3. REMOVE EX. 8" V.C.P. (STA. 13+64.71 TO STA. 16+09.71).
4. EX. A.C. TO BE REPLACED WITH 0.2' A.C. (CLASS B) OVER 0.5' AGGREGATE BASE (CLASS II).
5. CONSTRUCT PRECAST M.H. PER RIVERSIDE CITY STD. 500 WITH DROP PER RIVERSIDE CITY STD. 503.
6. CONSTRUCT M.H. PER RIVERSIDE CITY STD. 500 USING SALVAGED M.H.
7. REMODEL HOUSE CONNECTIONS.
8. VERIFY ELEV. BEFORE LAYING ANY PIPE.
9. REINFORCE CHANNEL INVERT OVER SEWER. SEE NOTE 10, SHT. 4.
10. CONTRACTOR SHALL BYPASS ALL SEWER FLOWS DURING CONSTRUCTION IN CLOSED CONDUITS.
11. REMOVE AND REPLACE EX. BARRICADE AS REQD.

INDEXED CD.

BENCH MARK	REVISIONS				RIVERSIDE COUNTY FLOOD CONTROL AND WATER CONSERVATION DISTRICT			ARIZONA STREET CHANNEL STAGE II SEWER REMODEL CHURCHILL DRIVE	PROJECT NO. 1-0-170
	No Change				DESIGNED BY: A.E.P.	RECOMMENDED FOR APPROVAL BY:	APPROVED BY:		DRAWING NO. 1-447
	REF.	DESCRIPTION	APPR.	DATE	DRAWN BY: R.A.S.	DESIGN ENGINEER R.E. NO. 16757	CHIEF ENGINEER R.E. NO. 12400	1970 STORM DRAIN BOND ISSUE PROJECT S-8	SHEET NO. 17 OF 43
					DATE DRAWN: MAY 1984	DATE: 11/14/86	DATE: 11-26-86		
					CHECKED BY: F.J.P.				

AS BUILT

D-607

STRUCTURAL NOTES

1. TRANSVERSE CONSTRUCTION JOINTS SHALL NOT BE PLACED WITHIN 30" OF JUNCTION STRUCTURE OPENINGS.
2. TRANSVERSE CONSTRUCTION JOINTS IN WALLS AND SLABS SHALL BE IN THE SAME PLANE. NO STAGGERING OF JOINTS WILL BE PERMITTED. TRANSVERSE CONSTRUCTION JOINTS SHALL BE NORMAL OR RADIAL TO CENTERLINE OF CONSTRUCTION.
3. EXPOSED EDGES OF CONCRETE, MEMBERS SHALL BE ROUNDED AS NOTED OR BEVELED 3/4" TYP.
4. LONGITUDINAL STEEL SHALL BE LAPPED PER A.C.I. CODE AT SPLICES.
5. MAXIMUM SPACING OF CONSTRUCTION JOINTS IS 50 FEET.

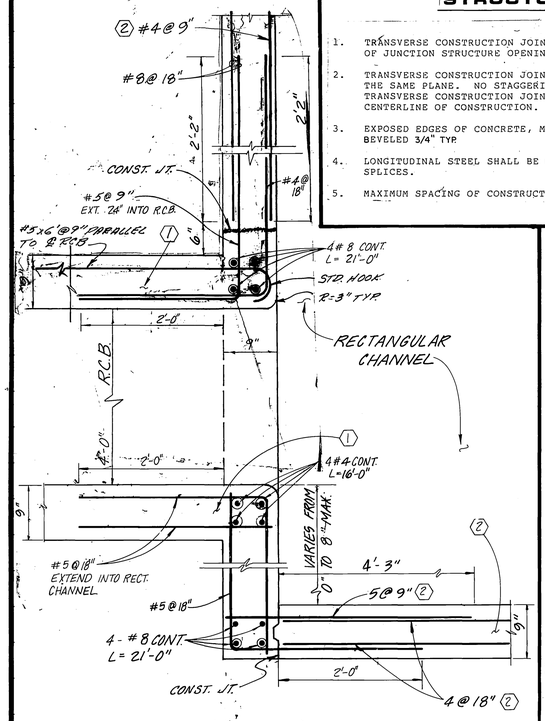

F

LINE "C-3" (STA. 51+63.27 LINE "C")
R.C.B. TO CHANNEL JUNCTION DETAIL ⚠2
SCALE 1"=1'

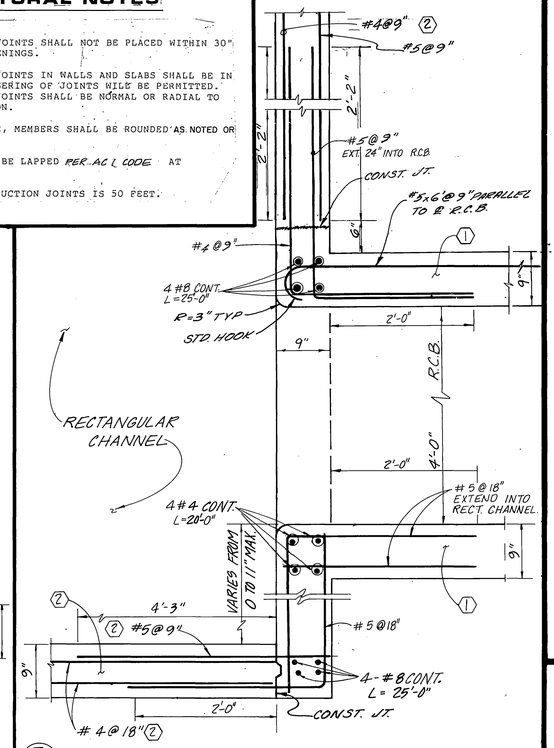

E

LINE "C-4" (STA. 51+46.87 LINE "C")
R.C.B. TO CHANNEL JUNCTION SECTION ⚠2
SCALE 1"=1'

USE DETAIL A "TRANSVERSE CONSTRUCTION JOINT" ON SHEET 29 OF 43 AS CONSTRUCTION JOINT IN THIS DRAWING EXCEPT AS NOTED OTHERWISE.

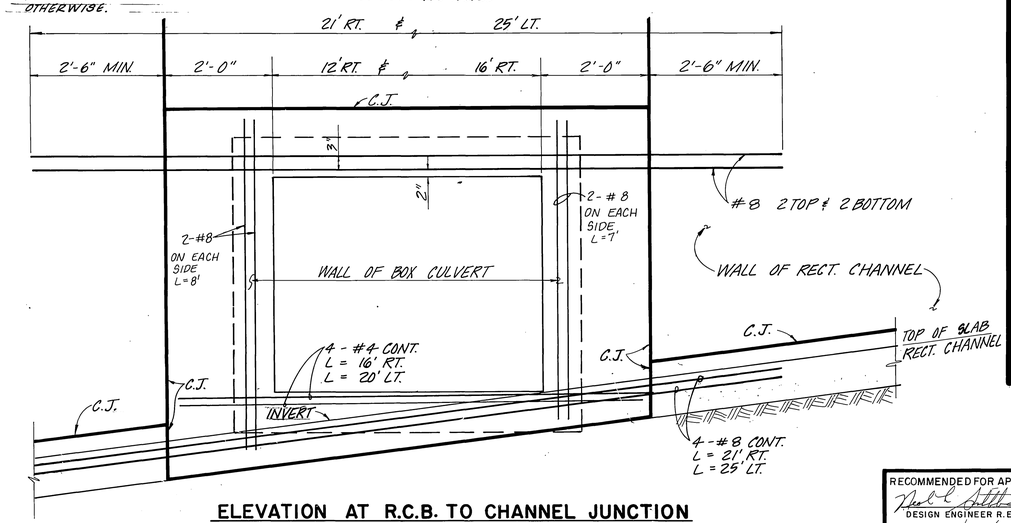

ELEVATION AT R.C.B. TO CHANNEL JUNCTION
SCALE: N.T.S.

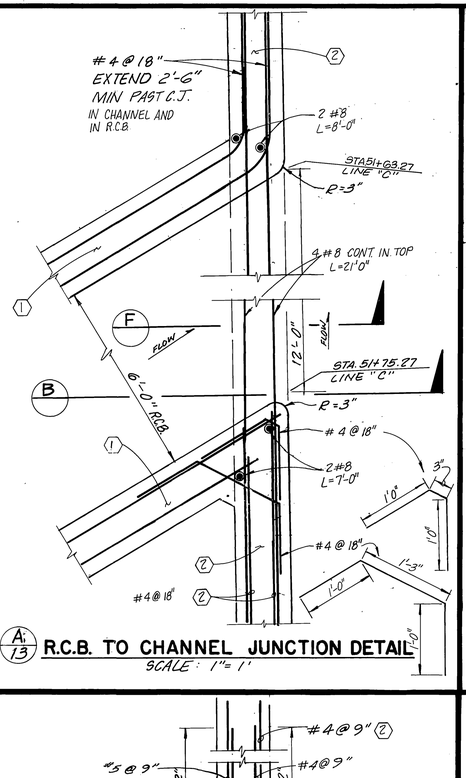

A/13 **R.C.B. TO CHANNEL JUNCTION DETAIL**
SCALE: 1"=1'

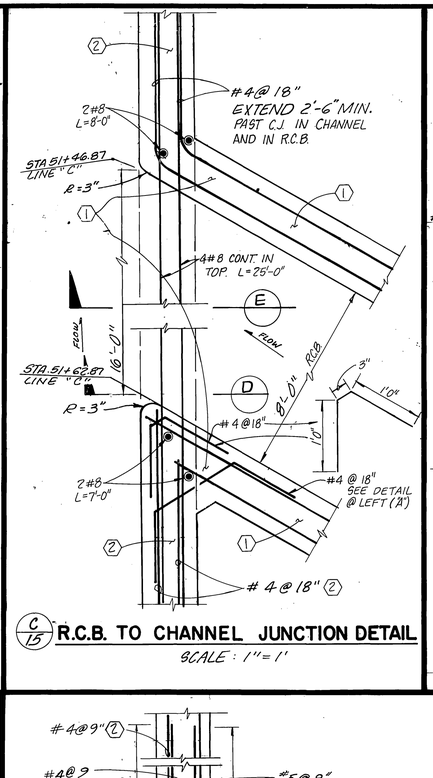

C/15 **R.C.B. TO CHANNEL JUNCTION DETAIL**
SCALE: 1"=1'

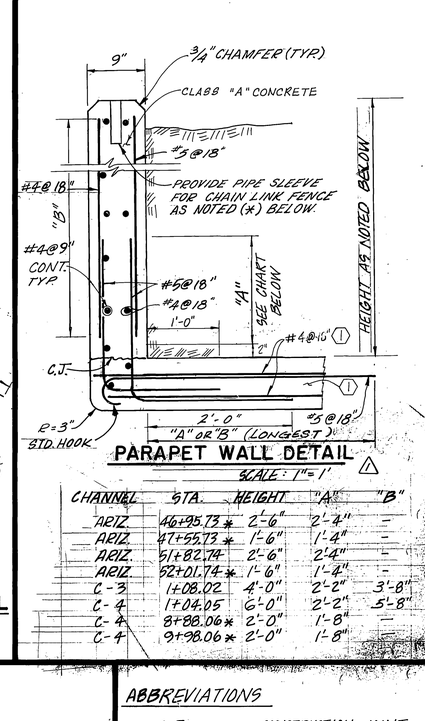

PARAPET WALL DETAIL

SCALE: 1"=1' ⚠1

CHANNEL	STA.	HEIGHT	"A"	"B"
ARIZ.	46+95.73 *	2'-6"	2'-4"	-
ARIZ.	47+55.73 *	1'-6"	1'-4"	-
ARIZ.	51+82.74	2'-6"	2'4"	-
ARIZ.	52+01.74 *	1'-6"	1'-4"	-
C-3	1+08.02	4'-0"	2'-2"	3'-8"
C-4	1+04.05	6'-0"	2'-2"	5'-8"
C-4	8+88.06 *	2'-0"	1'-8"	-
C-4	9+98.06 *	2'-0"	1'-8"	-

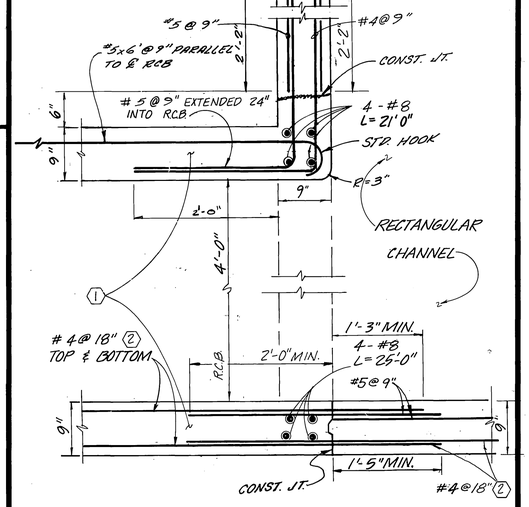

⚠2 B **LINE "C-3"** (STA 51+75.27 LINE "C")
R.C.B. TO CHANNEL JUNCTION SECTION
SCALE: 1"=1'

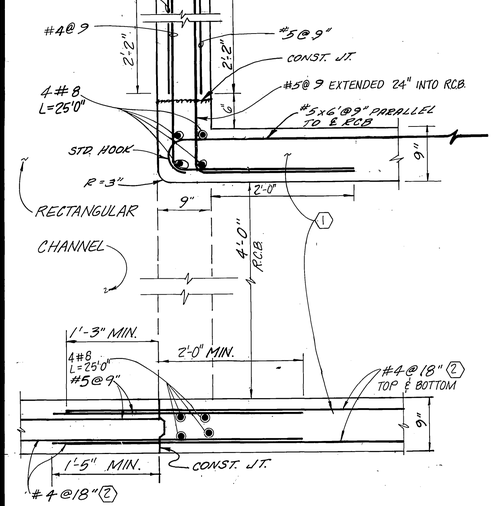

⚠2 D **LINE "C-4"** (STA 51+62.87 = LINE "C")
R.C.B. TO CHANNEL JUNCTION SECTION
SCALE: 1"=1'

ABBREVIATIONS

C.J.	CONSTRUCTION JOINT
O.C.	ON CENTER
REINF.	REINFORCING
REQ'D	REQUIRED
STD. HK	STANDARD HOOKS

NOTES: ⚠3

1. SEE SHEET 29 OR 41-42 FOR R.C.B. STRUCTURAL DETAILS.
2. SEE SHEET 24 FOR RECTANGULAR CHANNEL DETAILS.
3. ALL STEEL NOT NOTED AS ① OR ② IS SUPPLEMENTAL TO THE NORMAL R.C.B. OR RECT. CHAN. REINFORCEMENT.
4. WHERE LINES "B-3" & "C-4" JUNCTION TO RECT. CHAN. USE STD. HOOKS ON A ℄ B BARS ALONG TOP OF BOX & D ℄ E BARS ALONG BOTTOM OF BOX (SEE DETAIL SCHEDULE) FOR DEVELOPMENT OF MAIN TENSION REINFORCEMENT.

INDEXED-CD.

RECOMMENDED FOR APPROVAL BY:
DESIGN ENGINEER R.E. NO. 16757
DATE 11/14/86

J. F. DAVIDSON ASSOCIATES
CIVIL ENGINEERS - SURVEYORS - PLANNERS
RIVERSIDE - COLTON - PALM DESERT - TEMECULA
686-0844
APPROVED BY [signature] R.E. No. 17550 DATE 11/26/86
DESIGNED BY ____ DRAWN BY ____ CHECKED BY ____

REFERENCE	No. CHANGE DESCRIPTION	APPROVED	DATE
⚠1	MODIFIED PARAPET DETAILS	F.J.P.	11/86
⚠2	MODIFIED REINFORCEMENT IN JUNCTION		
	WALLS	F.J.P.	11/86
⚠3	MODIFIED & ADDED NOTES	F.J.P.	11/86

REVISIONS
AS BUILT

RIVERSIDE COUNTY FLOOD CONTROL AND WATER CONSERVATION DISTRICT

ARIZONA STREET CHANNEL
STRUCTURAL DETAILS

PROJECT NO. 1-0-170

Approved: [signature] Chief Engineer R.E.No. 12400
Date: 11-26-86

Designed: M.M.
Drawn: C.M.F.
Checked: F.J.P.
Date Drawn: 5/84

Sheet No. 18 of 43
Dwg. No. 1-447

D-607

86611

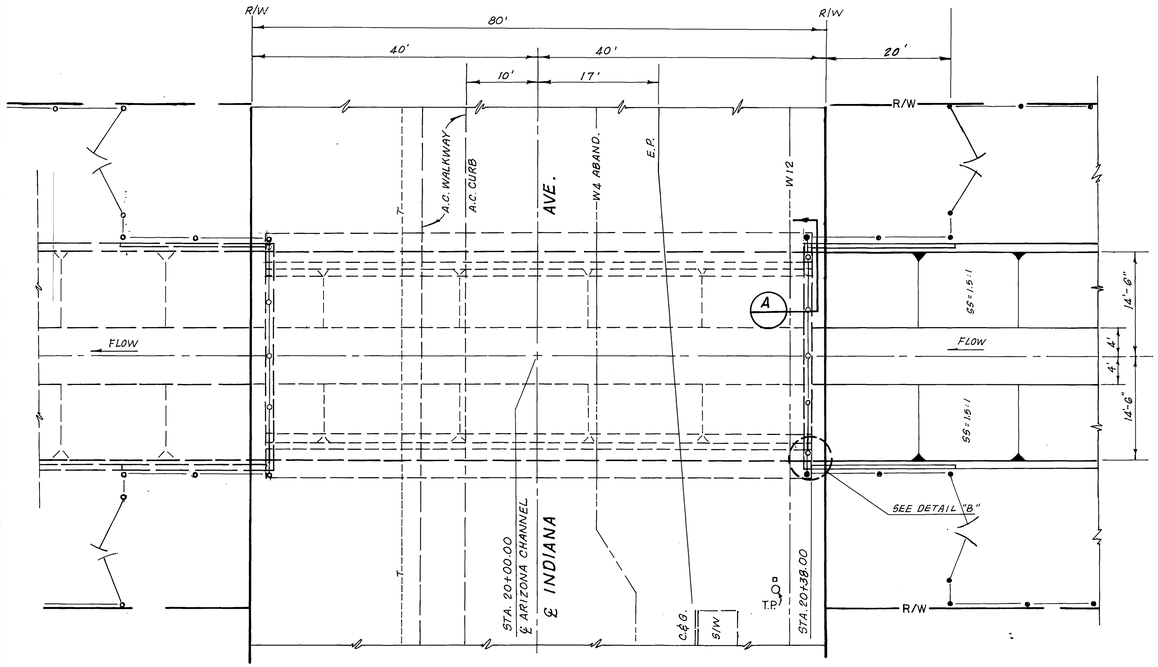

PLAN

10' 0' 10'

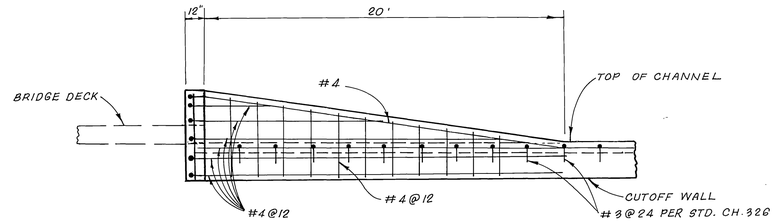

SIDE VIEW OF RETAINING WALL (TYP.)

N.T.S.

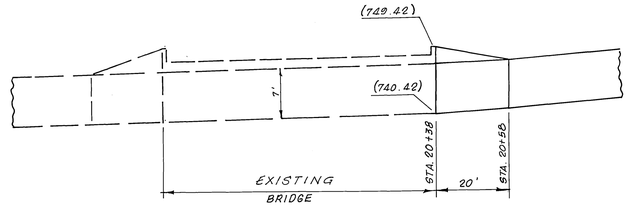

PROFILE RIGHT & LEFT WALLS

HORIZ. 20' 0 20'
VERT. 10' 0 10'

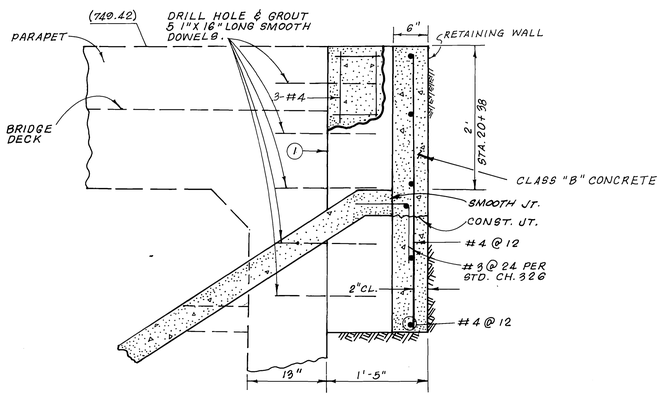

SECTION A

1' 0 1'

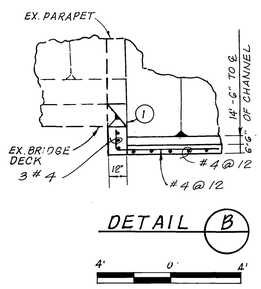

DETAIL B

4' 0 4'

NOTES:

(1) INSTALL 1/2" EXPANSION JOINT MATERIAL

INDEXED CD

BENCH MARK

REVISIONS			
REF.	DESCRIPTION	APPR.	DATE
	No Change		

RIVERSIDE COUNTY FLOOD CONTROL AND WATER CONSERVATION DISTRICT

DESIGNED BY: A.E.P.
DRAWN BY: PAM
DATE DRAWN: MAY 1984
CHECKED BY: F.J.P.

RECOMMENDED FOR APPROVAL BY: Neal L. Stebbins
DESIGN ENGINEER R.E. NO. 16757
DATE: 11/14/86

APPROVED BY: Kenneth J. Edwards
CHIEF ENGINEER R.E. NO. 12400
DATE: 11-26-86

ARIZONA ST. CHANNEL
STAGE II
INDIANA AVE. BRIDGE RETAINING WALL

PROJECT NO. 1-0-170
DRAWING NO. 1-447
SHEET NO. 19 OF 43

AS BUILT

D-607