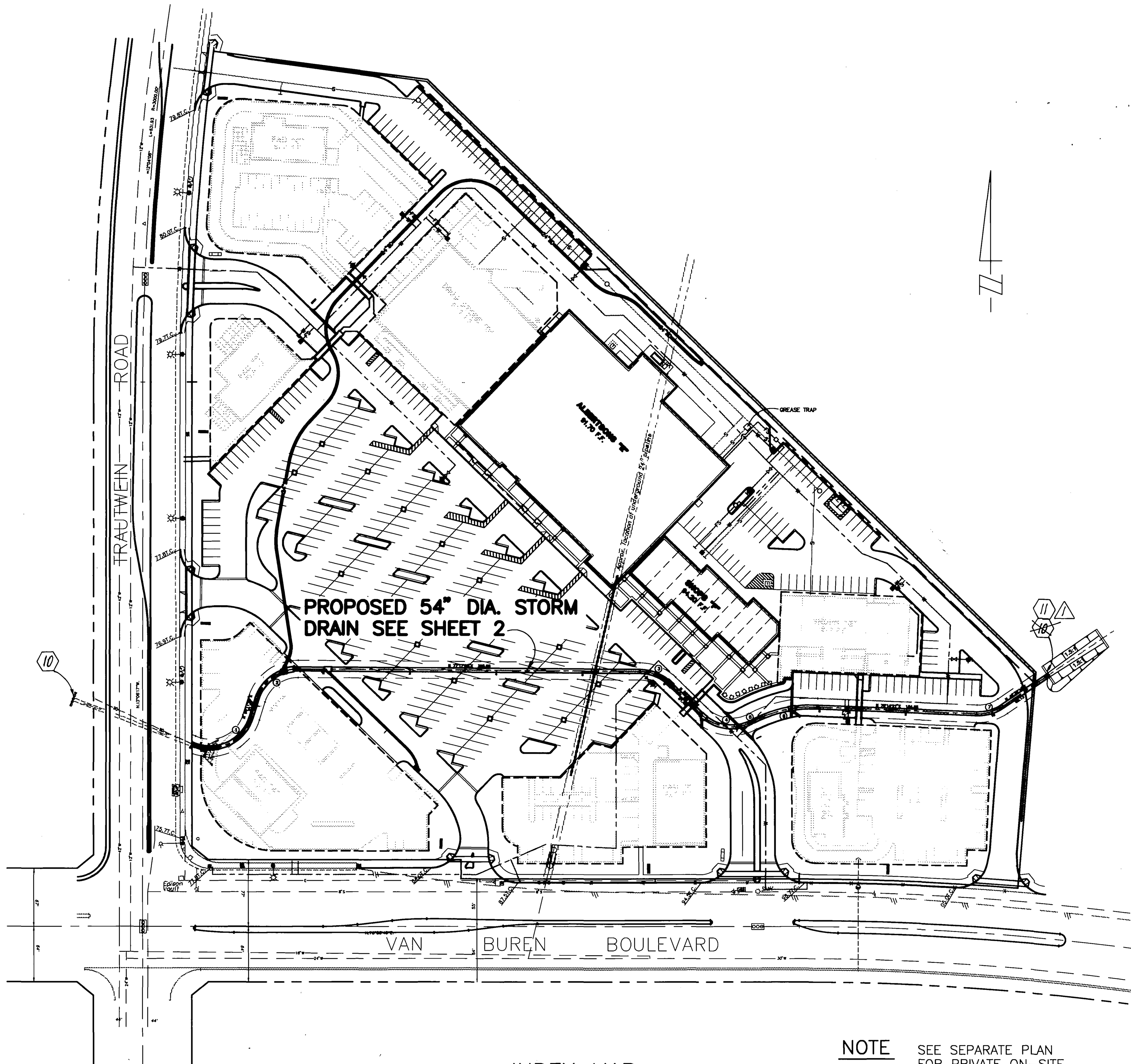

NOTE SEE SEPARATE PLAN FOR PRIVATE ON-SITE STORM DRAIN CONSTRUCTION

INDEX MAP
N.T.S.

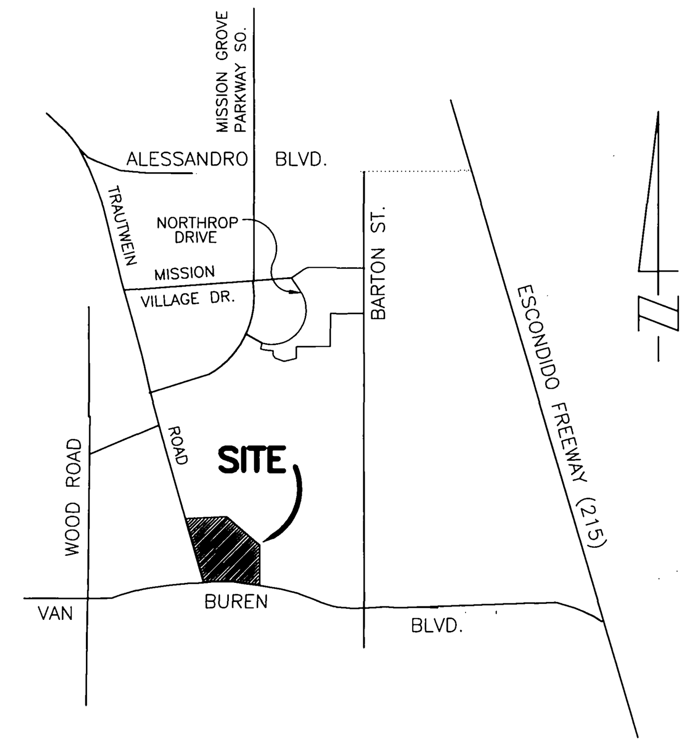

VICINITY MAP
N.T.S.

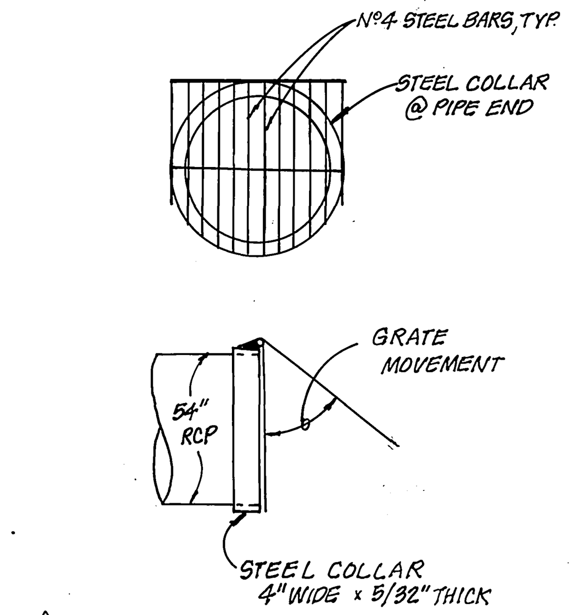

UPSTREAM INLET GRATE DETAIL (11)
n.t.s.

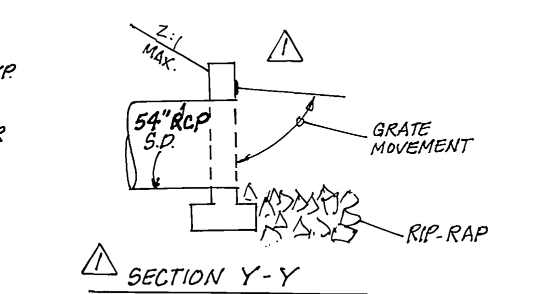

SECTION Y-Y

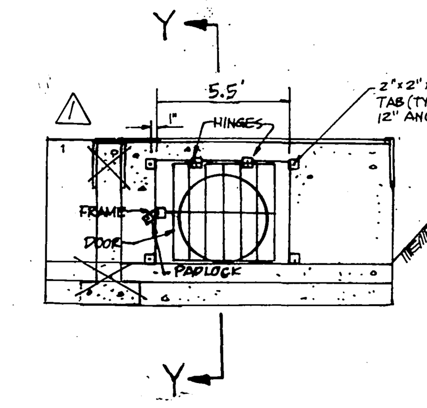

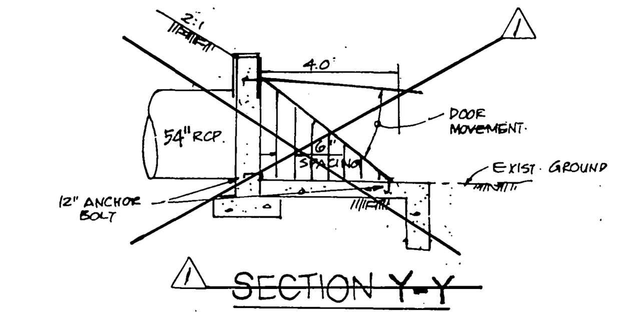

~~SECTION Y-Y~~

NOTES FOR HEADWALL & GRATE.
1. ALL STEEL BARS TO BE USED SHALL BE #4 REBAR OR GREATER.
2. BAR SPACING TO BE 6" MAXIMUM - ON CENTER
3. TRIM ANCHOR BOLTS UPON COMPLETION.
4. REMOVE ALL RUST OF GRATE & PAINT BLACK USING CITY APPROVED PAINT

DOWNSTREAM OUTLET
GRATE DETAIL (10)
NTS

CONSTRUCTION NOTES

	CONSTRUCTION NOTES	QUANTITIES
1	Construct M.H. "JM" per City Standard No. 432.	1 Ea.
2	Construct J.S. "B" per City Standard No. 421.	4 Ea.
3	Construct 18" R.C.P. (D-2000).	15* ~~60~~ L.F.
4	Construct 24" R.C.P. (D-1350).	15 L.F.
5	Construct 54" R.C.P. (D-1400) or CIPP.	1067 L.F.
6	Construct Concrete Collar per City Standard No. 424, (54").	1 Ea.
7	Construct Pipe Headwall per Caltrans Standard D89.	1 Ea.
8	Construct Timber Bulkhead per City Standard No. 456.	5 Ea.
9	Construct 1/4 ton grouted Rip-rap per plan.	200 Tons
10	INSTALL GRATE PER DETAIL HEREON OR CITY ACCEPTABLE ALTERNATE, DOWNSTREAM OUTLET	~~2 EA.~~ 1 EA.
11	INSTALL GRATE PER DETAIL HEREON, UPSTREAM INLET	1 EA.

STORM DRAIN NOTES

1. Quantities shown are for information only and the City of Riverside is not responsible for their accuracy.
2. Construction shall be in accordance with City of Riverside Dept. of Public Works Standard Drawings, Std. Dwg. No. 10 and the Standard Specifications for Public Works Construction, Current Edition.
3. It shall be the responsibility of the contractor to clear the right of way in accordance with the provisions of law as it affects each utility including irrigation lines and appurtenances and at no cost to the City.
4. Notice to contractor. The existence and location of any underground utility pipes or structures shown on these plans, were obtained by a search of the available records. To the best of our knowledge there are no existing utilities exept as shown on these plans. The contractor is required to take precautionary measures to protect the utility lines shown and any other lines not of record or not shown on these plans.
5. The private engineer signing these plans is responsible for assuring the accuracy and acceptability of the work hereon. In the event of discrepancies arising during construction, the private engineer shall be responsible for determining an acceptable solution and revising the plans for approval by the City.
6. The contractor shall call in a locations request to UNDERGROUND SERVICE ALERT (USA), Phone No. 1-800-227-2600, two working days before digging No construction permit will be issued by the Public Works Department involving excavation for underground facilities unless the applicant has been provided an Inquiry Identification Number by U.S.A.
7. The developer preparing these plans shall be responsible for preserving or re-establishing and referencing survey monuments destroyed, disturbed or buried as a result of construction shown hereon.
8. All embankment fill shall be compacted to minimum of 90% maximum dry density and shall be of an approved quality.
9. Before the Rip-Rap is accepted, as placed, at the outlet of any drainage structure, it shall be tested under flows as close as possible to design conditions with water obtained from fire hydrants in the immediate area.
10. All flagged elevations shall be staked in the field by the private engineer.
11. Contractor agrees that he shall assume sole and complete responsibility for job site conditions during the course of construction of this project, including safety of all persons and property; that this requirement shall apply continuously and not be limited to normal working hours; and that the contractor shall defend, indemnify and hold the owner and the engineer harmless from any and all liability, real or alleged, in connection with performance of work on this project, excepting for liability arising from the sole negligence of the owner or the engineer.
12. The concrete cover on the inside of all concrete pipe must be increased to provide a min. of 1.5" over the reinforcing when the design velocities exceed 20 fps. The concrete design strength in these reaches shall be:
fc = 5000 psi. for velocities exceeding 20 fps. and
fc = 6000 psi. for velocities exceeding 30 fps.

CAST-IN-PLACE REQUIREMENTS

1 FOR QUALITY CONTROL DURING PLACEMENT, EMPLOY AN EXPERIENCED R.C.E OR TECHNICIAN HAVING SUITABLE C.I.P.P. EXPERIENCE.

2 CONTROL CONCRETE BY MEANS OF 6"x12" TEST CYLINDERS MINIMUM OR I SET OF FOUR (4) CYLINDERS/100 C.Y. AND NOT LESS THAN TWO (2) SETS CYLINDERS PER EACH DAY'S POUR.

3 SUPPLYING BATCH PLANT SHALL BE INSPECTED AT THE START OF CONSTRUCTION AND NOT LESS THAN ONCE EACH WEEK THEREAFTER TO OBSERVE PLANT OPERATIONS BATCH WEIGHTS AND OTHER CONCRETE CONTROL MEASURES.

4 CONCRETE MIXES SHALL NOT HAVE LESS THAN SIX (6) SACKS OF PORTLAND CEMENT/C.U. YD.

5 CONCRETE MIX DESIGNS SHALL BE SUBMITTED BY CONTRACTOR FOR APPROVAL PRIOR TO START OF CONSTRUCTION.

6 IF AND WHEN FLOW VELOCITY EXCEEDS 10 F.P.S. A 140' SEGMENT OF THE INVERT SHALL BE THICKENED 2 INCHES IN WALL THICKNESS AS "SACRIFICIAL CONCRETE" TO RESIST ABRASION. COMPRESSIVE STRENGTH OF CONCRETE FOR DESIGN VELOCITIES ≥ 20 F.P.S. SHALL BE Fc=4000 PSI FOR DESIGN VELOCITIES ≥ 30 F.P.S. Fc=5000 P.S.I. SHALL BE PROVIDED.

7 MAXIMUM PERMISSIBLE CONCRETE SLUMP SHALL BE 2 1/2", 1 1/2" MIN. TO 2 1/2" MAX.

8 CONTRACTOR SHALL ALLOW INSPECTOR INTO PIPE WHILE UNDER CONSTRUCTION AND "ROD" FOR WALL THICKNESS AT A MIN. OF 25 C.Y. OF THE POUR.

9 AT THE END OF ALL POURS AND AT THE END OF EACH WORKING DAY THE CONTRACTOR SHALL INSTALL #4 DOWELS 24" LONG 12" INTO LAST POUR AT 12" CENTERS AROUND THE CIRCUMFERENCE OF CAST-IN-PLACE PIPE.

10 C.I.P.P. CONCRETE STRENGTH TO BE MINIMUM 3250 P.S.I.

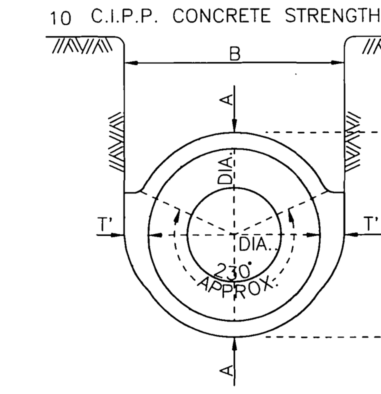

DIA.	A	MIN. B	T	MIN. T
72"	86"	87"	7"	7"
84"	100"	101"	8"	8"

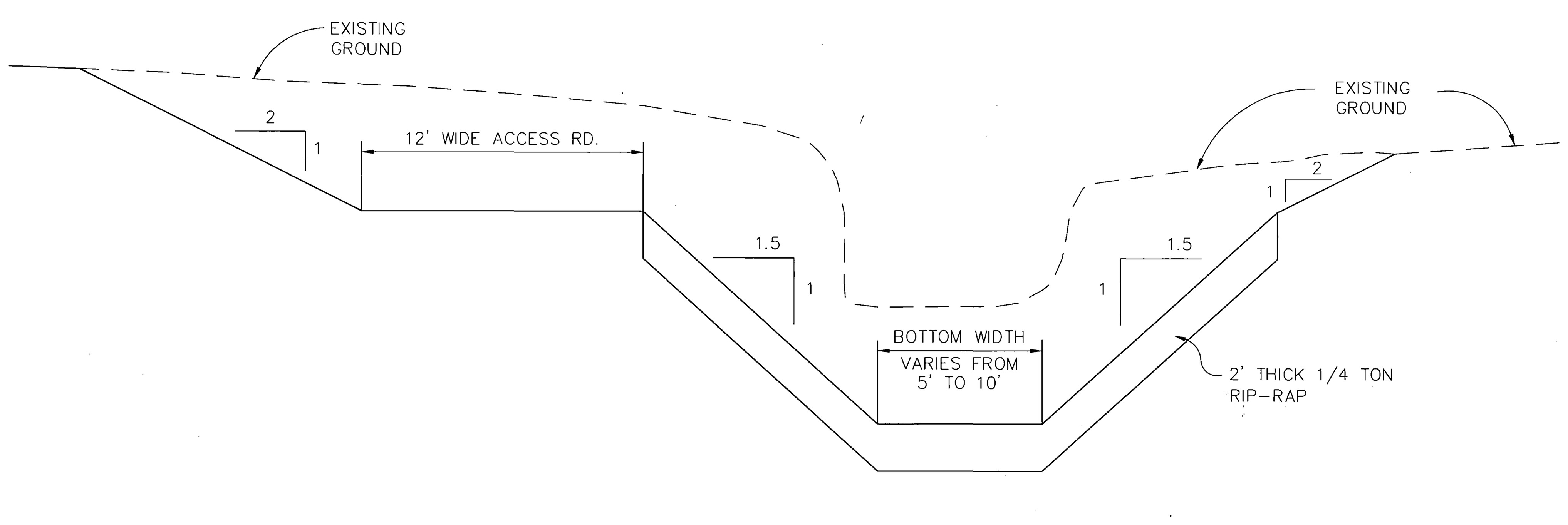

SECTION "A"-"A"
CHANNEL DETAIL
SCALE: 1"=5' HORIZ. & VERT.

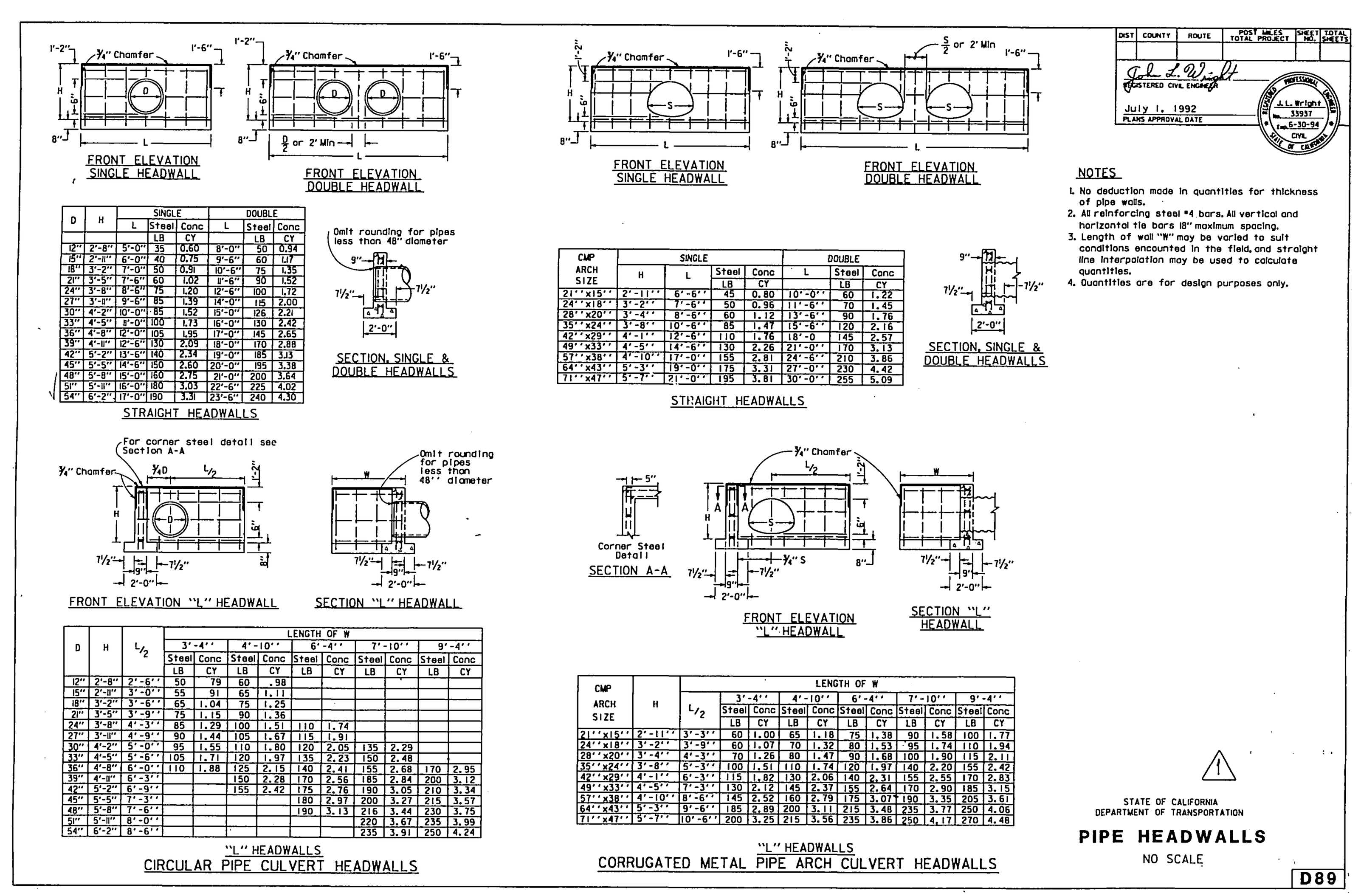

*AS BUILT 9/7/99 RJM

REVIEWED BY W.M.W.D.
SHEETS 1 THROUGH 2
FOR NON-INTERFERENCE COMPLIANCE ONLY
9/9/96
CIVIL ENGINEER RCE #46212

Underground Service Alert
Call: TOLL FREE
1 - 800
227 - 2600
TWO WORKING DAYS BEFORE YOU DIG

PRIVATE ENGINEERING NOTE

CONSTRUCTION CONTRACTOR AGREES THAT IN ACCORDANCE WITH GENERALLY ACCEPTED CONSTRUCTION PRACTICES, CONSTRUCTION CONTRACTOR WILL BE REQUIRED TO ASSUME SOLE AND COMPLETE RESPONSIBILITY FOR JOB SITE CONDITIONS DURING THE COURSE OF CONSTRUCTION OF THE PROJECT, INCLUDING SAFETY OF ALL PERSONS AND PROPERTY; THAT THIS REQUIREMENT SHALL BE MADE TO APPLY CONTINUOUSLY AND NOT BE LIMITED TO NORMAL WORKING HOURS, AND CONSTRUCTION CONTRACTOR FURTHER AGREES TO DEFEND, INDEMNIFY AND HOLD DESIGN PROFESSIONAL HARMLESS FROM ANY AND ALL LIABILITY, REAL OR ALLEGED, IN CONNECTION WITH THE PERFORMANCE OF WORK ON THIS PROJECT, EXCEPTING LIABILITY ARISING FROM THE SOLE NEGLIGENCE OF DESIGN PROFESSIONAL.

REGISTERED PROFESSIONAL ENGINEER RODNEY D. CRAMPTON No. C 22522 Exp. 12-31-97 CIVIL STATE OF CALIFORNIA

PREPARED UNDER THE DIRECTION OF:
Rodney D Crampton
REGISTERED CIVIL ENGINEER NO. 22522
EXPIRATION DATE: 12-31-97 DATE 8-28-96

J.F.DAVIDSON ASSOCIATES,INC.
-CIVIL ENGINEERS - SURVEYORS - PLANNERS-
1777 ATLANTA ST., STE. G-5 RIVERSIDE, CA 92507 (909)686-0844 FAX 909-686-5954
27349 JEFFERSON ST. TEMECULA, CA 92390 (909)676-7710 FAX 909-699-1981
75-150 SHERYL AVE. STE.D PALM DESERT, CA 92260 (619)346-2510 FAX (619)346-7772

CITY OF RIV. BUSINESS TAX ACCT. NO. 4994 EXP. DATE 12-30-96
SCALE: AS SHOWN
DATE: MAY 1996
BENCH MARK: B.M. V.B. 10-64 ELEV. 1700.67
BRASS DISK FLUSH & MARKED V.B. 10-64, 0.6 MILES E. ON VAN BUREN FROM INT. WOOD RD. 205' N. OF CL @ N.E. SIDE OF GRANITE BOULDERS TOP OF 3'X 15' X 18'

MARK	REVISIONS	APPR.	DATE
1	AS BUILT STORM DRAIN GRATES JWC 9/3/98	RMC	9-24-98

DESIGNED BY RDG DRAWN BY KAO CHECKED BY TCL

CITY OF RIVERSIDE, CALIFORNIA
DEPARTMENT OF PUBLIC WORKS

APPROVED BY	BY	DATE
PRINCIPAL ENGR.		8/19/97
PARK DEPARTMENT	—	—
TRAFFIC DIVISION	—	—
DEP. P.W. DIRECTOR	RMC	8/15/97
STREET SERVICES		10-5-97

APPROVED BY
DIRECTOR OF PUBLIC WORKS
DATE 8/18/97

PM 28353
STORM DRAIN PLANS
(PRIVATE STORM DRAIN)
TITLE SHEET

FOR: COURTNEY ARCHITECTS

PROJECT NO. PROJECT_NO.
D-646
SHEET 1 OF 2
FILE NO.: 9513315

K:\9513315\3315SD01.DWG
PLOT DATE: 7-26-96

INDEXED 9-10-97 GH

DATA

	DELTA/BEARING	RADIUS	LEN./DIST.	TANGENT
1	97°24'10"	50.00	85.00	56.92
2	73°05'34"	50.00	63.79	37.06
3	43°43'10"	50.00	38.15	20.06
4	71°17'33"	50.00	62.21	35.86
5	N 49°42'40"E		1.91	
6	29°31'41"	150.00	77.30	39.53
7	36°35'11"	50.00	31.93	16.53

PROFILE SCALE
HORIZ. 1" = 40'
VERT. 1" = 4'

CONSTRUCT 151.00 L.F. OF 54" RCP (D-1400) BEDDING PER STD. DWG. 452 (CASE II) OR CIPP

CONSTRUCT 443.81 L.F. OF 54" RCP (D-1400) BEDDING PER STD. DWG. 452 (CASE II) OR CIPP

CONSTRUCT 480.28 L.F. OF 54" RCP (D-1400) BEDDING PER STD. DWG. 452 (CASE II) OR CIPP

MH "JM" @ STA. 1+55.75	
A	45°00'00"
B	24"
C'	6.25'
D	54"
D_2	54"
E"	6.50'
L"	7.50'

J.S. "B" @ (TYP. OF 4)	
A	45°00'00"
B	18"
C'	6.0'
D	54"
E'	4.75'
L	3.25'

(1) CONSTRUCT ROP STUB L=15'± PLUG WITH TIMBER BULKHEAD PER STD. DWG. NO. 456

REMOVE EXISTING CONC. HEADWALL RIP-RAP, AND 54" S.D. (65'±)

REMOVE 15.5' OF EXISTING STORM DRAIN

* AS BUILT 9/7/99 RJM

REVIEWED BY W.M.W.D.
SHEETS 1 THROUGH 2
FOR NON-INTERFERENCE COMPLIANCE ONLY

CIVIL ENGINEER RCE. #46212 9/9/96

Underground Service Alert
Call: TOLL FREE 1 - 800 227 - 2600
TWO WORKING DAYS BEFORE YOU DIG

PRIVATE ENGINEERING NOTE

CONSTRUCTION CONTRACTOR AGREES THAT IN ACCORDANCE WITH GENERALLY ACCEPTED CONSTRUCTION PRACTICES, CONSTRUCTION CONTRACTOR WILL BE REQUIRED TO ASSUME SOLE AND COMPLETE RESPONSIBILITY FOR JOB SITE CONDITIONS DURING THE COURSE OF CONSTRUCTION OF THE PROJECT, INCLUDING SAFETY OF ALL PERSONS AND PROPERTY; THAT THIS REQUIREMENT SHALL BE MADE TO APPLY CONTINUOUSLY AND NOT BE LIMITED TO NORMAL WORKING HOURS, AND CONSTRUCTION CONTRACTOR FURTHER AGREES TO DEFEND, INDEMNIFY AND HOLD DESIGN PROFESSIONAL HARMLESS FROM ANY AND ALL LIABILITY, REAL OR ALLEGED, IN CONNECTION WITH THE PERFORMANCE OF WORK ON THIS PROJECT, EXCEPTING LIABILITY ARISING FROM THE SOLE NEGLIGENCE OF DESIGN PROFESSIONAL.

REGISTERED PROFESSIONAL ENGINEER ROBERT D. CRAMPTON No. C 22522 Exp. 12-31-97 CIVIL STATE OF CALIFORNIA

PREPARED UNDER THE DIRECTION OF:
Robert D Crampton
REGISTERED CIVIL ENGINEER NO. 22522
EXPIRATION DATE: 12-31-97 DATE 8-28-96

J.F.DAVIDSON ASSOCIATES, INC.
-CIVIL ENGINEERS - SURVEYORS - PLANNERS-
1777 ATLANTA ST., STE. G-5, RIVERSIDE, CA 92507, (909)686-0844, FAX 909-686-5954
27349 JEFFERSON ST., TEMECULA, CA 92390, (909)676-7710, FAX 909-699-1981
75-150 SHERYL AVE. STE.D, PALM DESERT, CA 92260, (619)346-2510, FAX (619)346-7772

CITY OF RIV. BUSINESS TAX ACCT. NO. 4994 EXP. DATE 12-30-96

SCALE: AS SHOWN
DATE: MAY 1996

BENCH MARK: B.M. V.B. 10-64 ELEV. 1700.67
BRASS DISK FLUSH & MARKED V.B. 10-64, 0.6 MILES E. ON VAN BUREN FROM INT. WOOD RD. 205' N. OF CL @ N.E. SIDE OF GRANITE BOULDERS TOP OF 3'X 15' X 18'

MARK	REVISIONS	APPR.	DATE
1	AS BUILT STORM DRAIN GRATES (JDC 9/3/98	RJM	9-25-98

DESIGNED BY RDC DRAWN BY KAO CHECKED BY TCL

CITY OF RIVERSIDE, CALIFORNIA
DEPARTMENT OF PUBLIC WORKS

APPROVED BY	BY	DATE
PRINCIPAL ENGR.		8/19/97
PARK DEPARTMENT	—	—
TRAFFIC DIVISION	—	—
DEP. P.W. DIRECTOR	RJM	8/19/97
STREET SERVICES		8/19/97

APPROVED BY
DIRECTOR OF PUBLIC WORKS
DATE 8/18/97

PM 28353
STORM DRAIN PLANS
(PRIVATE STORM DRAIN)
NORTHWEST OF INTERSECTION OF TRAUTWEIN & VAN BUREN BLVD. FOR ALBERTSON'S

FOR: COURTNEY ARCHITECTS

PROJECT NO. PROJECT_NO.
D-646
SHEET 2 OF 2
FILE NO.: 9513315

INDEXED 9-10-97 GH

K:\9513315\3315SD02.DWG XREF: K:\9513315\3315SITE.DWG
PLOT DATE: 8-22-96