STORM DRAIN IMPROVEMENT PLANS

WOOD ROAD AND JOHN F. KENNEDY DRIVE
IN THE CITY OF RIVERSIDE

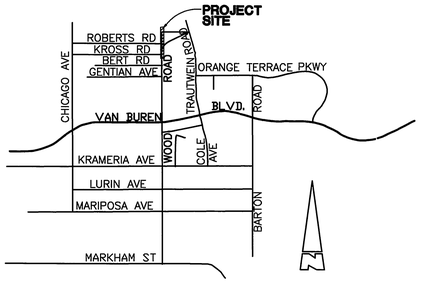

VICINITY MAP
N.T.S. T3S R4W

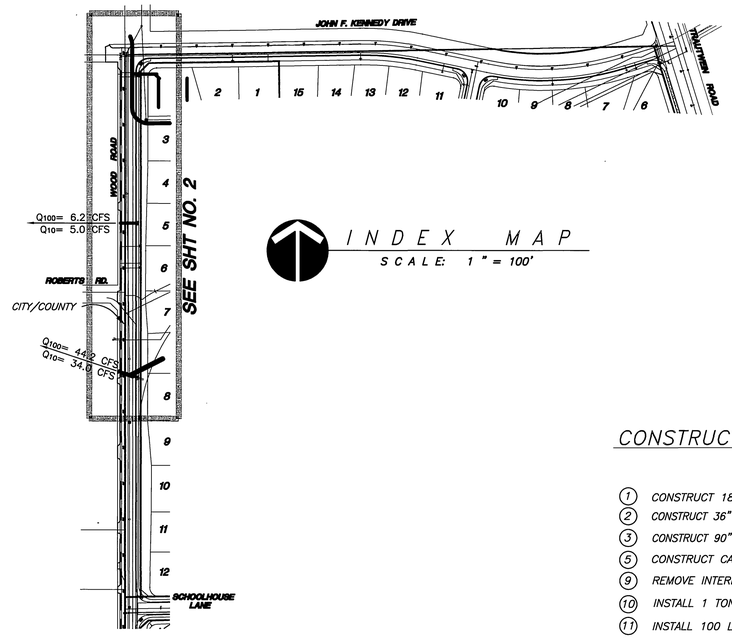

CATCH BASIN STENCILING DETAIL
N.T.S.

(A) STENCILS TO HAVE 2" LETTERS AS FOLLOWS :
NO DUMPING
DRAINS TO RIVER

(B) PLACE BOTH STENCILS CENTERED WITHIN THE CATCHBASIN OPENING AND WITHIN THE TOP OF CURB.

(C) SPRAY BOTH STENCILS WITH WHITE PAINT.

(D) REMOVE STENCILS WHEN PAINT IS DRY.

NOTE

1. " THE CLEAN WATER FILTER BASIN & UNDERGROUND PIPING TO STORM DRAIN SHALL BE MAINTAINED BY THE HOME OWNER ASSOCIATION ESTABLISHED FOR PLANNING AREA 2 ".
2. THE PRIVATE ENGINEER SIGNING THESE PLANS IS RESPONSIBLE FOR ASSURING THE ACCURACY OF DESIGN AND ACCEPTABILITY OF THE WORK HEREON. IN THE EVENT OF DISCREPANCIES ARISING AFTER COUNTY APPROVAL OR DURING CONSTRUCTION, THE PRIVATE ENGINEER SHALL BE RESPONSIBLE FOR DETERMINING AN ACCEPTABLE SOLUTION AND REVISING THE PLANS FOR APPROVAL BY THE ~~CITY~~ COUNTY (IN COUNTY AREA)

"NOTE: WORK CONTAINED WITHIN THESE PLANS SHALL NOT COMMENCE UNTIL AN ENCROACHMENT PERMIT AND OR GRADING PERMIT HAS BEEN ISSUED".

APPROVAL BY COUNTY TRANSPORTATION DEPARTMENT IS FOR THE AREA WITHIN COUNTY ROAD RIGHT-OF-WAY ONLY.

HOLD HARMLESS INDEMNIFICATION CLAUSE

THE CONTRACTOR AGREES THAT HE SHALL ASSUME SOLE AND COMPLETE RESPONSIBILITY FOR JOB SITE CONDITIONS DURING THE COURSE OF CONSTRUCTION OF THE PROJECT INCLUDING SAFETY OF ALL PERSONS AND PROPERTY; THAT THIS REQUIREMENT SHALL APPLY CONTINUOUSLY AND NOT BE LIMITED TO NORMAL WORKING HOURS; AND THAT THE CONTRACTOR SHALL DEFEND, INDEMNIFY, AND HOLD THE CITY OF RIVERSIDE, THE OWNER, AND THE PRIVATE ENGINEERS HARMLESS FOR ANY AND ALL LIABILITY; REAL OR ALLEGED, IN CONNECTION WITH PERFORMANCE OF WORK ON THIS PROJECT, EXCEPTING FOR LIABILITY ARISING FROM THE SOLE NEGLIGENCE OF THE OWNER OR THE ENGINEER.

EXISTING UNDERGROUND STRUCTURES

THE EXISTENCE AND LOCATION OF ANY UNDERGROUND UTILITY PIPE STRUCTURES OR CONDUITS SHOWN ON THESE PLANS ARE OBTAINED BY A SEARCH OF THE AVAILABLE RECORDS. TO THE BEST OF OUR KNOWLEDGE, THERE ARE NO EXISTING UTILITIES EXCEPT AS SHOWN ON THESE PLANS. IT SHALL BE THE CONTRACTOR'S RESPONSIBILITY TO NOTIFY THE OWNERS OF THE UTILITIES OR STRUCTURES CONCERNED BEFORE STARTING WORK. CONTRACTOR FURTHER ASSUMES ALL LIABILITY AND RESPONSIBILITY FOR THE UNDERGROUND UTILITY PIPES, CONDUITS OR STRUCTURES SHOWN OR NOT SHOWN ON THESE PLANS.

NOTICE TO CONTRACTOR

CONTRACTOR SHALL VERIFY ALL CONDITIONS AND DIMENSIONS AND SHALL REPORT ALL DISCREPANCIES TO THE ENGINEER PRIOR TO THE COMMENCEMENT OF WORK.

CONSTRUCTION NOTES AND QUANTITY ESTIMATE

		CITY		COUNTY	
(1)	CONSTRUCT 18" RCP (D-LOAD PER PLAN) W/ BEDDING PER CITY STD. 452.	249	L.F.	15	L.F.
(2)	CONSTRUCT 36" R.C.P. (D-LOAD PER PLAN) W/ BEDDING PER CITY STD. 452.	8	L.F.	--	--
(3)	CONSTRUCT 90" RCP (D-LOAD PER PLAN) W/ BEDDING PER CITY STD. 452.	325	L.F.	--	--
(5)	CONSTRUCT CATCH BASIN PER CITY STD. 405 (W & V PER PLAN).	3	EA.	--	--
(9)	REMOVE INTERFERING PORTIONS OF EXISTING STORM DRAIN	--	--	--	--
(10)	INSTALL 1 TON GROUTED RIPRAP, 4.25 FT DEEP	800	S.F.	--	--
(11)	INSTALL 100 LB (12") GROUTED RIPRAP, 1.5 FT DEEP	--	--	50	S.F.
(24)	CONSTRUCT CONCRETE COLLAR PER CITY STD. 424.	4	EA.	--	--
(28)	CONSTRUCT JUNCTION STRUCTURE NO. 3 PER R.C.F.C. & W.C.D. STD. DWG. NO. JS 228	--	--	2	EA.
(30)	CONSTRUCT TRANSITION STRUCTURE NO. 2 PER R.C.F.C. & W.C.D. STD DWG NO. TS 302.	--	--	1	EA.
(32)	CONSTRUCT MANHOLE JM PER CITY STD. 432.	1	EA.	--	--
(60)	CONSTRUCT SLOPED PROTECTION BARRIER PER APWA STD. 360-0, CASE-B	2	EA.	--	--
(61)	CONSTRUCT TRASH RACK (INCLINED) PER APWA STD. 361-0 CASE B	--	--	2	EA.
(80)	CONSTRUCT CAST-IN-PLACE REINFORCED CONCRETE SINGLE BOX CULVERT PER CALTRANS STD. D80.	21.50	L.F.	3.0	L.F.
(85)	CONSTRUCT BOX CULVERT WINGWALLS TYPE "D" PER CALTRANS STD. D85	--	--	1	EA.
(89)	CONSTRUCT PIPE HEADWALL PER CALTRANS STD. D89 AS NOTED ON PLAN	1	EA.	1	EA.
(90)	CONSTRUCT PIPE CULVERT ENDWALL AND WINGWALLS PER CALTRANS STD. D90	1	EA.	--	--
(93)	INSTALL CMP RISER PER DETAIL ON INTERIM DRAINAGE PLAN SHEET 3	1	EA.	--	--

GENERAL NOTES

1. IT SHALL BE THE RESPONSIBILITY OF THE CONTRACTOR TO CLEAR THE RIGHT-OF-WAY IN ACCORDANCE WITH THE PROVISIONS OF LAW AS IT AFFECTS EACH UTILITY INCLUDING IRRIGATION LINES AND APPURTENANCES AND AT NO COST TO THE CITY.
2. CONSTRUCTION SHALL BE IN ACCORDANCE WITH THE CITY OF RIVERSIDE DEPT. OF PUBLIC WORKS' STANDARD DRAWINGS, IT'S SUPPLEMENTAL NOTES, AND THE STANDARD SPECIFICATIONS FOR PUBLIC WORKS CONSTRUCTION, CURRENT EDITION.
3. THE PRIVATE ENGINEER SIGNING THESE PLANS IS RESPONSIBLE FOR ASSURING THE ACCURACY AND ACCEPTABILITY OF THE WORK HEREON. IN THE EVENT OF DISCREPANCIES ARISING DURING CONSTRUCTION, THE PRIVATE ENGINEER SHALL BE RESPONSIBLE FOR DETERMINING AN ACCEPTABLE SOLUTION AND REVISING THE PLANS FOR APPROVAL BY THE CITY.
4. QUANTITIES SHOWN ARE FOR INFORMATION ONLY AND THE CITY OF RIVERSIDE IS NOT RESPONSIBLE FOR THEIR ACCURACY.
5. THE DEVELOPER SHALL BE RESPONSIBLE FOR PRESERVING OR RE-ESTABLISHING AND REFERENCING SURVEY MONUMENTS DESTROYED, DISTURBED OR BURIED AS A RESULT OF CONSTRUCTION SHOWN HEREON.
6. ALL FLAGGED ELEVATIONS SHALL BE STAKED IN THE FIELD BY THE PRIVATE ENGINEER.
7. TRIM EDGE OF EXISTING PAVEMENT WHERE NEW PAVEMENT JOINS TO A SMOOTH, STRAIGHT LINE. CONSTRUCT MATCH-UP PAVING AS SHOWN ON PLAN AND OVERLAY PAVING AS DIRECTED IN THE FIELD TO PRODUCE A SMOOTH SECTION.
8. ALL STATIONING REFERS TO CENTERLINE OF CONSTRUCTION UNLESS OTHERWISE NOTED. STATIONING FOR LATERALS AND CONNECTOR PIPES REFER TO THE CENTERLINE-CENTERLINE INTERSECTION.
9. HOURS OF OPERATION ARE 7 A.M. TO 6 P.M. MONDAY THROUGH FRIDAY. DUST SHALL BE CONTROLLED BY WATERING OR OTHER APPROVED METHODS.
10. NO PERSON SHALL PERFORM ANY CONSTRUCTION ACTIVITY OR INSTALL ANY OBJECTS WITHIN THE PUBLIC RIGHTS-OF-WAY OR EASEMENTS OF THE CITY OF RIVERSIDE WITHOUT A VALID CONSTRUCTION PERMIT OR A STREET OPENING PERMIT OR AN ENCROACHMENT PERMIT ISSUED BY THE CITY'S PUBLIC WORKS DEPARTMENT.
11. ANY TRAFFIC CONTROL STRIPING OBLITERATED AND OR BADLY WORN DURING CONSTRUCTION SHALL BE RESTORED BY THE CONTRACTOR WITHIN FIVE DAYS AFTER NOTIFICATION FROM THE CITY INSPECTORS.
12. THE CONTRACTOR SHALL CALL IN A LOCATION REQUEST TO UNDERGROUND SERVICE ALERT (U.S.A.), PHONE No. 1-800-227-2600, TWO WORKING DAYS BEFORE DIGGING. NO CONSTRUCTION PERMIT WILL BE ISSUED BY THE PUBLIC WORKS DEPARTMENT INVOLVING EXCAVATION FOR UNDERGROUND FACILITIES UNLESS THE APPLICANT HAS BEEN PROVIDED AN INQUIRY IDENTIFICATION NUMBER BY U.S.A.
13. BEFORE THE RIPRAP IS ACCEPTED AS PLACED AT THE OUTLET OF ANY DRAINAGE STRUCTURE, IT SHALL BE TESTED UNDER FLOWS AS CLOSE AS POSSIBLE TO DESIGN CONDITIONS WITH WATER OBTAINED FROM FIRE HYDRANTS IN THE IMMEDIATE AREA.
14. ALL CROSS SECTIONS ARE TAKEN LOOKING UPSTREAM.
15. CONTRACTOR TO VERIFY EXISTING STORM DRAIN ELEVATIONS PRIOR TO CONSTRUCTION.
16. PIPE BEDDING SHALL BE PER CITY OF RIVERSIDE STD. DWG. No. 452, CASE 1.
17. THE STORM DRAIN CONTRACTOR SHALL ADJUST STORM DRAIN MANHOLES TO FINAL GRADE AFTER PAVING IS COMPLETED.
18. PIPE SECTIONS TO BE BEVELED AT ONE OR BOTH ENDS AS NEEDED TO MEET SYSTEM DESIGN PARAMETERS. SECTIONS BEVELED IN THIS MANNER NORMALY FIT TOGETHER ON A 90-, 45-, OR 22.5 FOOT RADIUS CURVE.

MS3763 IP 990091

COUNTY OF RIVERSIDE
TRANSPORTATION DEPARTMENT
SHEET 1 THROUGH 5
APPROVED BY:
KHALED OTHMAN 33950 3/7/00
RECOMMENDED: CRUSMAN 07 MAR 00 DATE:

REVIEW BY:
WESTERN MUNICIPAL WATER DISTRICT
for Non-Interference Compliance
SHEET 1 THROUGH 5
CIVIL ENGINEER R.C.E. ~~30927~~ 46212
DATE: 11/4/99

SEAL: REGISTERED PROFESSIONAL ENGINEER KHALED A. OTHMAN No. 33950 EXP. 6-30-02 CIVIL STATE OF CALIFORNIA

CITY BUSINESS TAX CERTIFICATION NO. 033595 EXP. DATE 4/2/00

CHARTER COMMUNICATIONS
APPROVED BY 10-26-99 DATE

CITY OF RIVERSIDE
OVERHEAD & UNDERGROUND
APPROVED BY 10-26-99 DATE

TELEPHONE:
PACIFIC BELL
APPROVED BY 10-22-99 DATE

SOUTHERN CALIFORNIA
GAS COMPANY
APPROVED BY 10/26/99 DATE

* AS-BUILT PER PLANS 7-07-06 GH

CALL BEFORE YOU DIG
Underground Service Alert
Call: TOLL FREE
1-800
227-2600
TWO WORKING DAYS BEFORE YOU DIG

PRIVATE ENGINEERING NOTE

CONSTRUCTION CONTRACTOR AGREES THAT IN ACCORDANCE WITH GENERALLY ACCEPTED CONSTRUCTION PRACTICES, CONSTRUCTION CONTRACTOR WILL BE REQUIRED TO ASSUME SOLE AND COMPLETE RESPONSIBILITY FOR JOB SITE CONDITIONS DURING THE COURSE OF CONSTRUCTION OF THE PROJECT, INCLUDING SAFETY OF ALL PERSONS AND PROPERTY; THAT THIS REQUIREMENT SHALL BE MADE TO APPLY CONTINUOUSLY AND NOT BE LIMITED TO NORMAL WORKING HOURS, AND CONSTRUCTION CONTRACTOR FURTHER AGREES TO DEFEND, INDEMNIFY AND HOLD DESIGN PROFESSIONAL HARMLESS FROM ANY AND ALL LIABILITY, REAL OR ALLEGED, IN CONNECTION WITH THE PERFORMANCE OF WORK ON THIS PROJECT, EXCEPTING LIABILITY ARISING FROM THE SOLE NEGLIGENCE OF DESIGN PROFESSIONAL.

BENCHMARK

RIVERSIDE COUNTY BENCHMARK, STAMPED V88-64 AT SW CORNER OF PLUMMER RD. AND VAN BUREN BLVD. 259.0 FT. SOUTH OF VAN BUREN BLVD. 205.0 FT. WEST OF PLUMMER RD. ON THE TOP OF A 4.0 FT. X 10.0 FT. GRANITE BOULDER A BRASS DISK FLUSH AND MARKED. ELEV. 1638.123

REGISTERED PROFESSIONAL ENGINEER Civil Ned J. Araujo No. 057835 Exp. 6-30-02 STATE OF CALIFORNIA

The Keith Companies TKC
22690 Cactus Avenue, Suite 300 Moreno Valley, CA 92553-9024 (909) 653-0234
APPROVED BY:
DATE: 10/14/99 NED J. ARAUJO R.C.E. NO. 57835 REGISTRATION EXPIRES 06-30-02

MARK	REVISIONS:	APPR.	DATE

DESIGNED BY NJA DRAWN BY AN/AB CHECKED BY NJA

CITY OF RIVERSIDE
PUBLIC WORKS DEPARTMENT

APPROVED BY	DATE	BY
PRINCIPAL ENGINEER	4/12/2000	
PARK DEPARTMENT		
TRAFFIC DIVISION		
P.W. ENGR. MANAGER	4/12/00	TMS
STREET SERVICES	11/26/99	

PUBLIC WORKS DIRECTOR
DATE 4-14-00

STORM DRAIN IMPROVEMENT PLAN
OFFSITE for TRACT 28863
LINES "C", "D", & "E"
TITLE SHEET

HORIZ. SCALE: AS SHOWN VERT. SCALE: N/A

ACCOUNT NO. 31414.000
D - 672
SHEET 1 OF 5

INDEXED 7-19-2000 GH

Plotted 09/07/99 16:47:44 - N:\31414.000\dwg\storm_drain\PRS30000.dwg PC-4117-S1

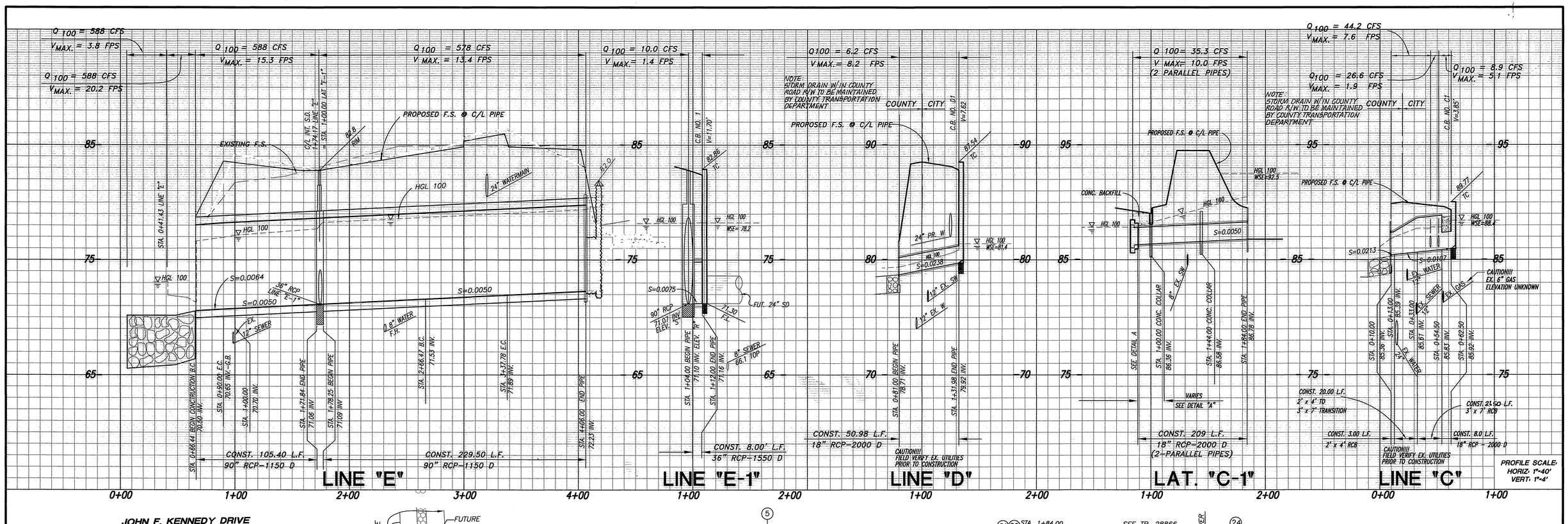

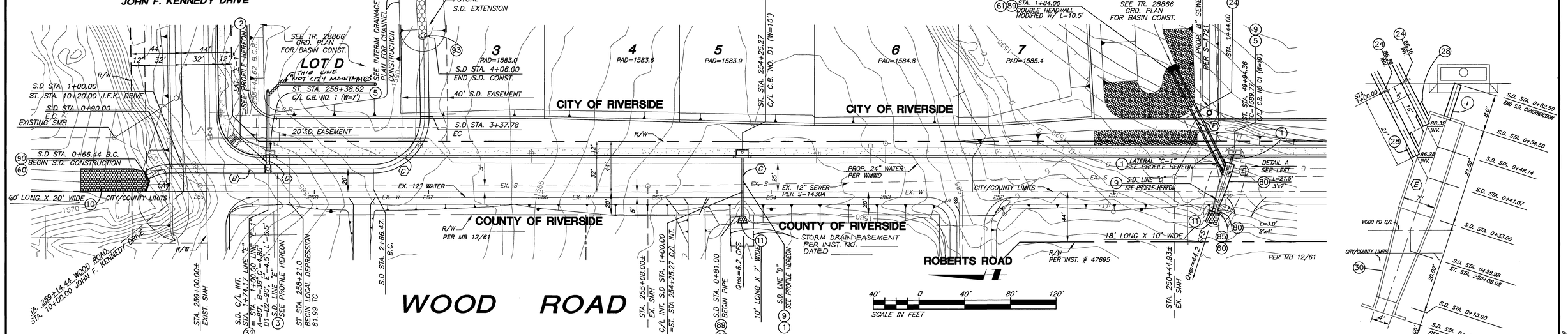

CURVE DATA				
NO.	BEARING/DELTA	RADIUS	LENGTH	TANGENT
(A)	30°30'00"	45.00'	23.56'	12.00'
(B)	N00°03'03"E	–	176.46'	–
(C)	90°47'49"	45.00'	71.31'	45.63'
(D)	N89°58'52"W	–	12.00'	–
(E)	N71°47'53"W	–	52.50	–
(F)	N63°12'07"E	–	84.00'	–
(G)	N89°58'52"W	–	50.89'	–

CONSTRUCTION NOTES:

(1) CONSTRUCT 18" RCP (D-LOAD PER PLAN) W/ BEDDING PER CITY STD. 452.
(2) CONSTRUCT 36" R.C.P. (D-LOAD PER PLAN) W/ BEDDING PER CITY STD. 452.
(3) CONSTRUCT 90" RCP (D-LOAD PER PLAN) W/ BEDDING PER CITY STD. 452.
(5) CONSTRUCT CATCH BASIN PER CITY STD. 405 (W & V PER PLAN).
(9) REMOVE INTERFERING PORTIONS OF EXISTING 24" X 36" C.M.P.A. STORM DRAIN
(10) INSTALL 1 TON GROUTED RIPRAP, 4.25 FT DEEP
(11) INSTALL 100 LBS (12") GROUTED RIPRAP, 1.5 FT DEEP
(24) CONSTRUCT CONCRETE COLLAR PER CITY STD. 424.
(28) CONSTRUCT JUNCTION STRUCTURE NO. 3 PER STD. DWG. NO. JS 228 R.C.F.C. & W.C.D.
(30) CONSTRUCT TRANSITION STRUCTURE NO. 2 PER R.C.F.C. & W.C.D. STD DWG NO. TS 302.
(32) CONSTRUCT MANHOLE JM PER CITY STD. 432.
(61) CONSTRUCT TRASH RACK (INCLINED) PER APWA STD. 361-0
(60) CONSTRUCT SLOPED PROTECTION BARRIER PER APWA STD. 360-0
(80) CONSTRUCT CAST-IN-PLACE REINFORCED CONCRETE SINGLE BOX CULVERT PER CALTRANS STD. D80.
(85) CONSTRUCT BOX CULVERT WINGWALLS TYPE "D" PER CALTRANS STD. D85
(89) CONSTRUCT PIPE HEADWALL PER CALTRANS STD. D89 AS NOTED ON PLAN.
(90) CONSTRUCT PIPE CULVERT ENDWALL AND WINGWALLS PER CALTRANS STD. D90
(93) INSTALL CMP RISER PER DETAIL ON SHEET 3 OF 5.

NOTE: STORM DRAIN WITHIN COUNTY ROAD R/W TO BE MAINTAINED BY COUNTY TRANSPORTATION DEPARTMENT.

*AS-BUILT PER PLAN S 7-07-05 HH

SEAL

MS3763 IP 990091

COUNTY OF RIVERSIDE
TRANSPORTATION DEPARTMENT
APPROVED BY:
KHALED OTHMAN 33950 DATE: 3/7/00
RECOMMENDED C.R.ISMAN DATE: 07 MAR 06

Underground Service Alert
Call: TOLL FREE
1-800 227-2600
TWO WORKING DAYS BEFORE YOU DIG

PRIVATE ENGINEERING NOTE

CONSTRUCTION CONTRACTOR AGREES THAT IN ACCORDANCE WITH GENERALLY ACCEPTED CONSTRUCTION PRACTICES, CONSTRUCTION CONTRACTOR WILL BE REQUIRED TO ASSUME SOLE AND COMPLETE RESPONSIBILITY FOR JOB SITE CONDITIONS DURING THE COURSE OF CONSTRUCTION OF THE PROJECT, INCLUDING SAFETY OF ALL PERSONS AND PROPERTY; THAT THIS REQUIREMENT SHALL BE MADE TO APPLY CONTINUOUSLY AND NOT BE LIMITED TO NORMAL WORKING HOURS, AND CONSTRUCTION CONTRACTOR FURTHER AGREES TO DEFEND, INDEMNIFY AND HOLD DESIGN PROFESSIONAL HARMLESS FROM ANY AND ALL LIABILITY, REAL OR ALLEGED, IN CONNECTION WITH THE PERFORMANCE OF WORK ON THIS PROJECT, EXCEPTING LIABILITY ARISING FROM THE SOLE NEGLIGENCE OF DESIGN PROFESSIONAL.

BENCHMARK

RIVERSIDE COUNTY BENCHMARK, STAMPED VBB-64 AT SOUTHWEST CORNER OF PLUMMER ROAD AND VAN BUREN BOULEVARD. 259.0 FEET SOUTH OF VAN BUREN BOULEVARD, 205.0 FEET WEST OF PLUMMER ROAD, ON THE TOP OF A 4.0 FOOT x 10.0 FOOT GRANITE BOULDER A BRASS DISK FLUSH AND MARKED.
ELEV. 1638.14

REGISTERED PROFESSIONAL ENGINEER
Civil
Ned J. Araujo
No. 057835
Exp. 6-30-02
STATE OF CALIFORNIA

The Keith Companies TKC
22960 Cactus Avenue, Suite 300 Moreno Valley, CA 92553-9024 (909) 653-0334

APPROVED BY:
DATE: 10/14/99
NED J. ARAUJO R.C.E. NO. 57835
REGISTRATION EXPIRES 06-30-02

MARK	REVISIONS:	APPR.	DATE

DESIGNED BY NJA DRAWN BY AN/AB CHECKED BY NJA

CITY OF RIVERSIDE
PUBLIC WORKS DEPARTMENT

	DATE	BY
APPROVED BY		
PRINCIPAL ENGINEER	4/13/2000	
PARK DEPARTMENT	—	—
TRAFFIC DIVISION	—	—
P.W. ENGINEER MANAGER	4/11/00	TDB
STREET SERVICES	10/26/99	

R. McGrath
PUBLIC WORKS DIRECTOR
DATE 4-14-00

STORM DRAIN IMPROVEMENT PLAN
OFF-SITE FOR TRACT 28863
LINES "C", "D", & "E"
WOOD ROAD

HORIZ. SCALE: 1" = 40' VERT. SCALE: 1" = 4'

ACCOUNT NO. 31414.000

D - 672

SHEET 2 OF 5

INDEXED 7-19-2000 HH

Plotted: 10/13/99 14:33:47 - N:\31414.000\dwg\storm_drain\PRS02002.dwg

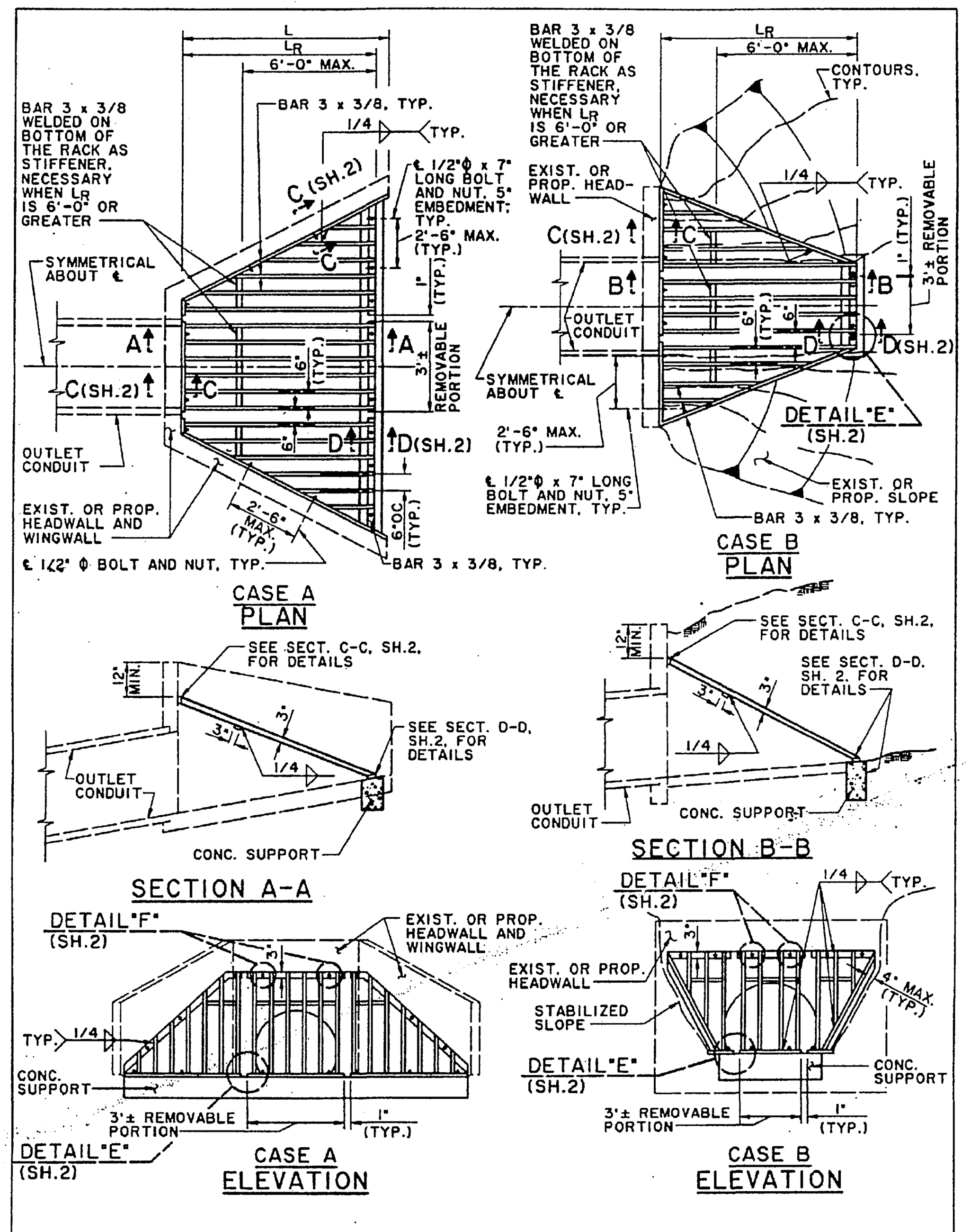

AMERICAN PUBLIC WORKS ASSOCIATION – SOUTHERN CALIFORNIA CHAPTER

PROMULGATED BY THE APWA-AGC JOINT COOPERATIVE COMMITTEE 1993

TRASH RACK (INCLINED)

STANDARD PLAN **361-0** SHEET 1 OF 3

USE WITH STANDARD SPECIFICATIONS FOR PUBLIC WORKS CONSTRUCTION

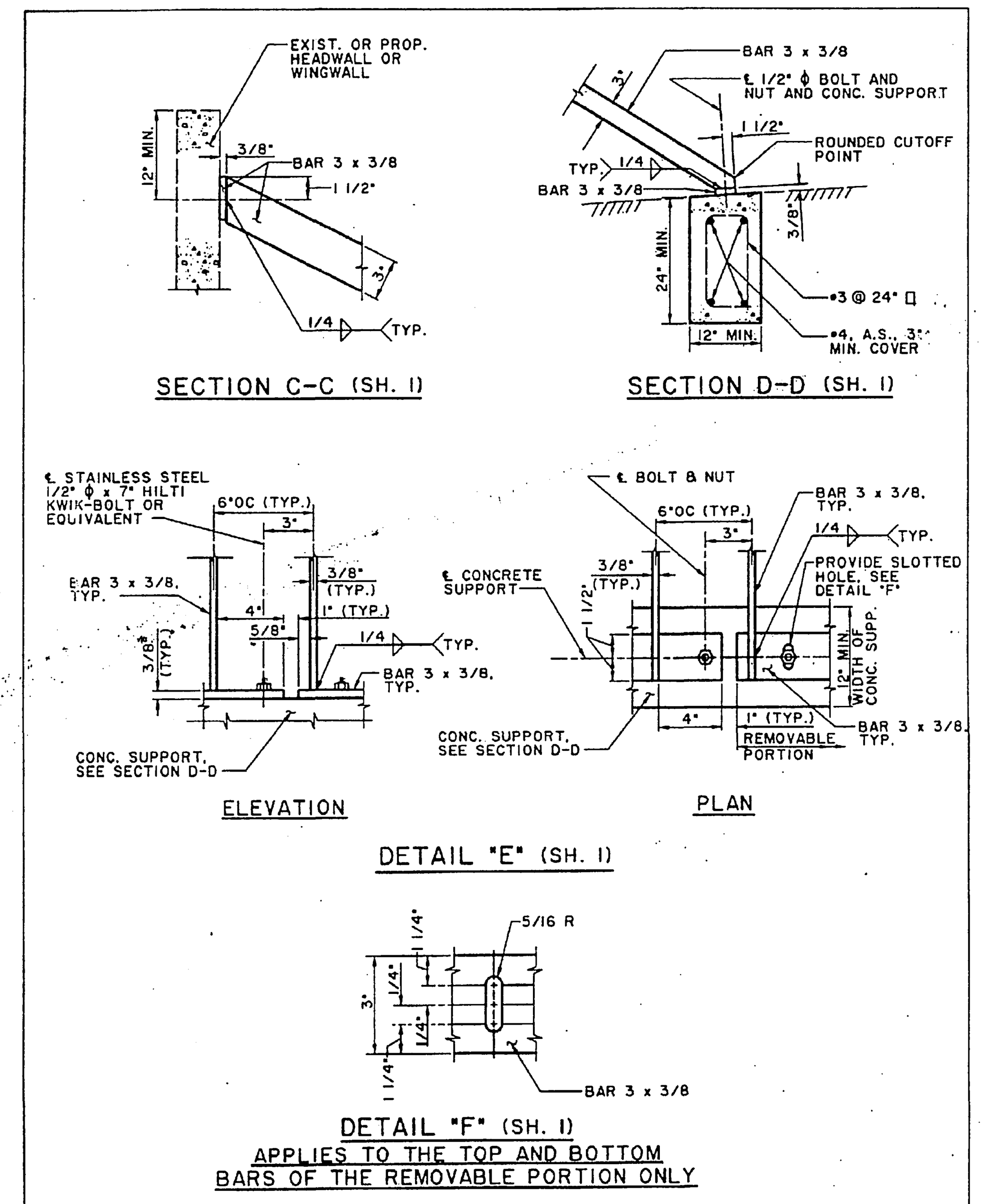

AMERICAN PUBLIC WORKS ASSOCIATION – SOUTHERN CALIFORNIA CHAPTER

TRASH RACK (INCLINED)

STANDARD PLAN **361-0** SHEET 2 OF 3

NOTES

1. MAXIMUM SIZE OF OUTLET TO BE USED WITH THIS RACK IS 48" PIPE OR 48" WIDE RCB. MAXIMUM LENGTH OF RACK L_R IS 10'-0".
2. L_R CAN BE ADJUSTED SO THAT THE SLOPE OF THE RACK IS APPROXIMATELY 2 HORIZONTAL TO I VERTICAL.
3. THE CONCRETE SUPPORT IS NOT NECESSARY IF EXISTING OR PROPOSED INLET STRUCTURE HAS ADEQUATE SUPPORT CUTOFF WALL. IT DOES NOT ELIMINATE THE NEED FOR A CUTOFF WALL BUT CAN BE INTEGRATED WITH ONE WHEN REQUIRED AT A PARTICULAR INSTALLATION.
4. GALVANIZE ALL EXPOSED FERROUS PARTS AFTER FABRICATION.
5. IF FIELD WELDS ARE NECESSARY, USE GALVICON, GALVALLOY OR AGENCY APPROVED EQUAL FOR COATING.
6. ALL BOLTS SHALL BE 1/2" IN DIAMETER AND 7" IN LENGTH. ON REMOVABLE PORTION OF THE RACK, USE 300 SERIES STAINLESS STEEL BOLTS AND NUTS. FOR WINGWALL BOLTS FOR CASE A, AND WHERE HEADWALL AND WINGWALL ARE EXISTING, HILTI KWIK-BOLT OR EQUIVALENT CAN BE USED.

AMERICAN PUBLIC WORKS ASSOCIATION – SOUTHERN CALIFORNIA CHAPTER

TRASH RACK (INCLINED)

STANDARD PLAN **361-0** SHEET 3 OF 3

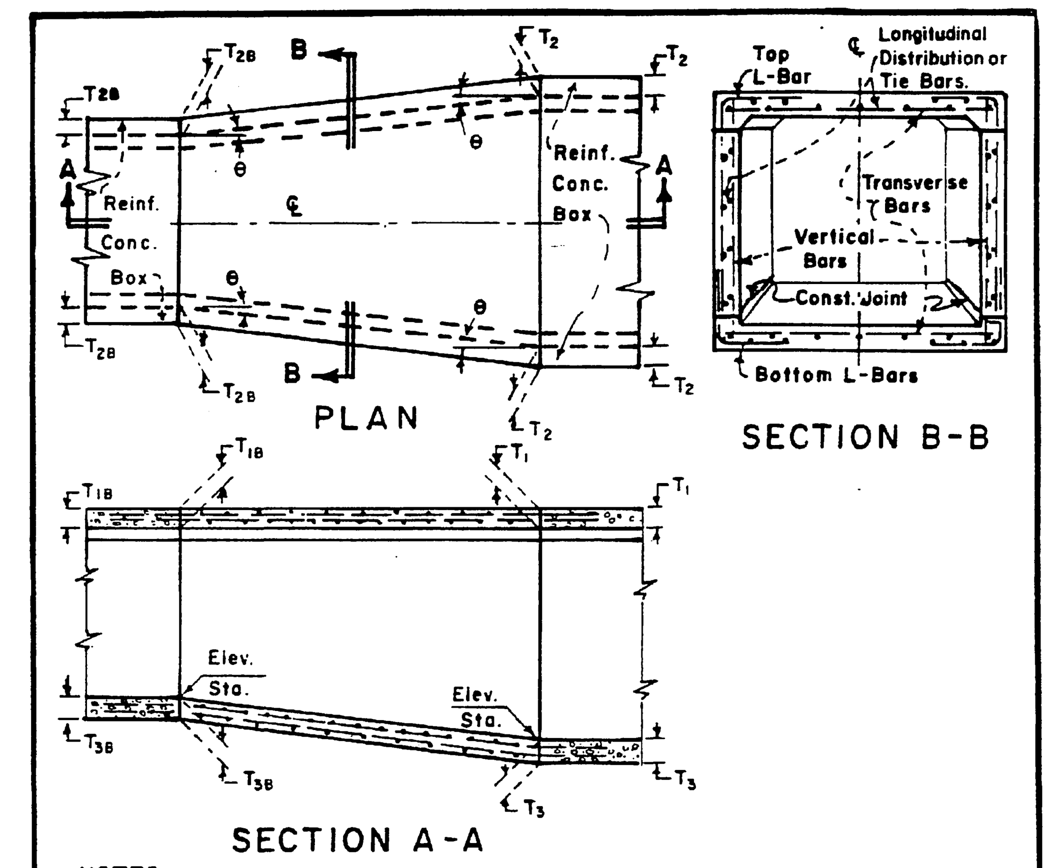

NOTES

1. The horizontal angle of divergence or convergence, θ shall not exceed 5°45'.
2. The reinforcing steel bar size, spacing and cover over the steel of straight transverse bars in top or bottom slabs, of L-bars in top or bottom corners, of straight vertical bars in side walls and of longitudinal distribution and tie bars in top or bottom slabs or side walls shall be those of whichever adjoining box section provides the greater steel area for each type of bar. The bar lengths shall vary uniformly throughout the transition.
3. The thickness of the walls and slabs shall be those of the adjoining box section at each end of the transition and shall vary uniformly between the two ends.
4. Structural Concrete shall be Class "A".
5. The transition structure shall be constructed in accordance with the general structural notes applying to box structures, shown on the project drawing.
6. Details of construction joints shall be as shown on the project drawings for single barrel box structure.

REVISIONS			RIVERSIDE COUNTY FLOOD CONTROL AND WATER CONSERVATION DISTRICT	TRANSITION STRUCTURE NO. 2
4	CHANGE NOTE	7-28-72	APPROVED BY: John W. Bryant, DATE 5-25-71	STANDARD DRAWING NUMBER TS302 SHEET 1 OF 1

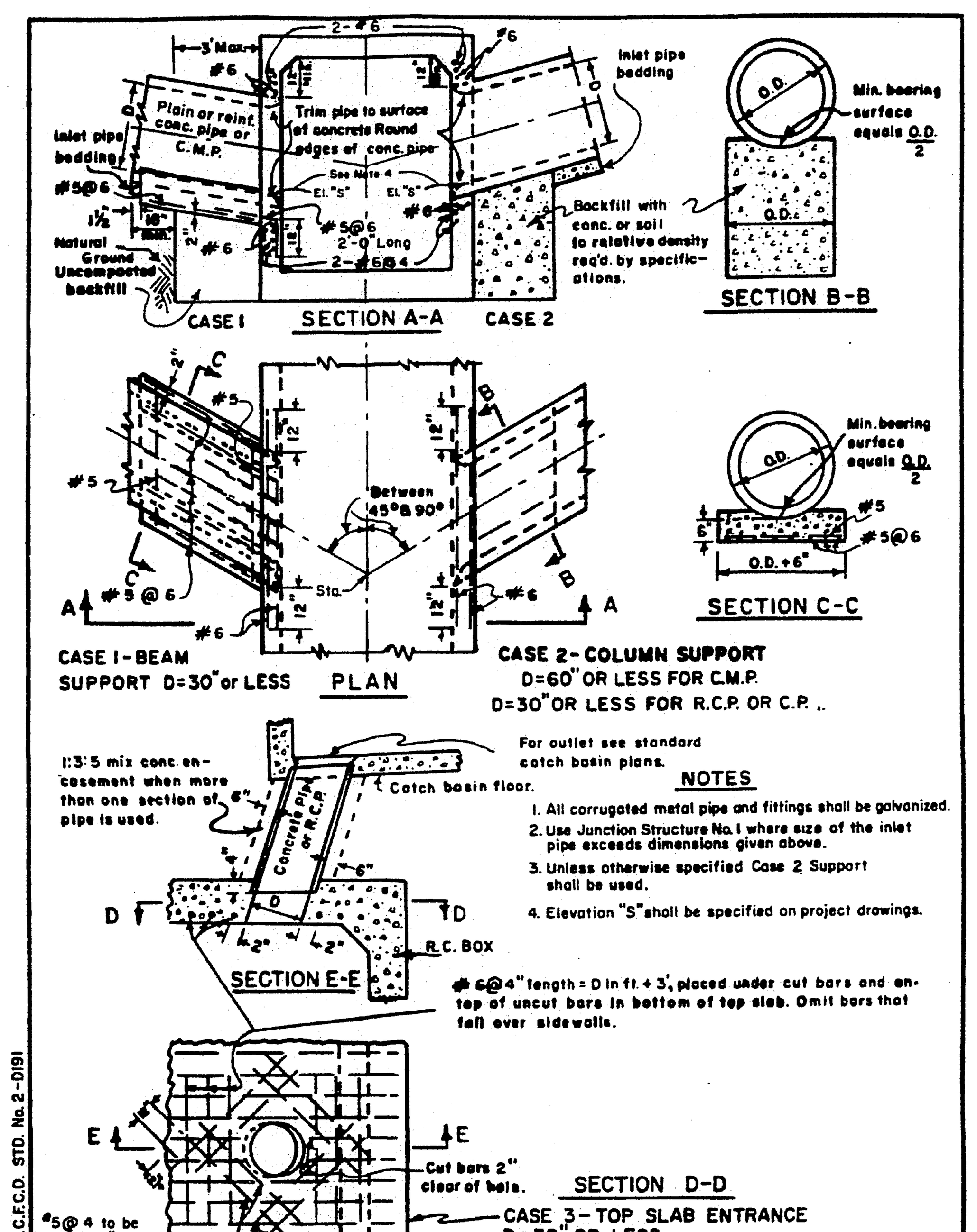

RIVERSIDE COUNTY FLOOD CONTROL AND WATER CONSERVATION DISTRICT	JUNCTION STRUCTURE NO. 3
APPROVED BY: John W. Bryant, DATE 6-1-71	STANDARD DRAWING NUMBER JS228

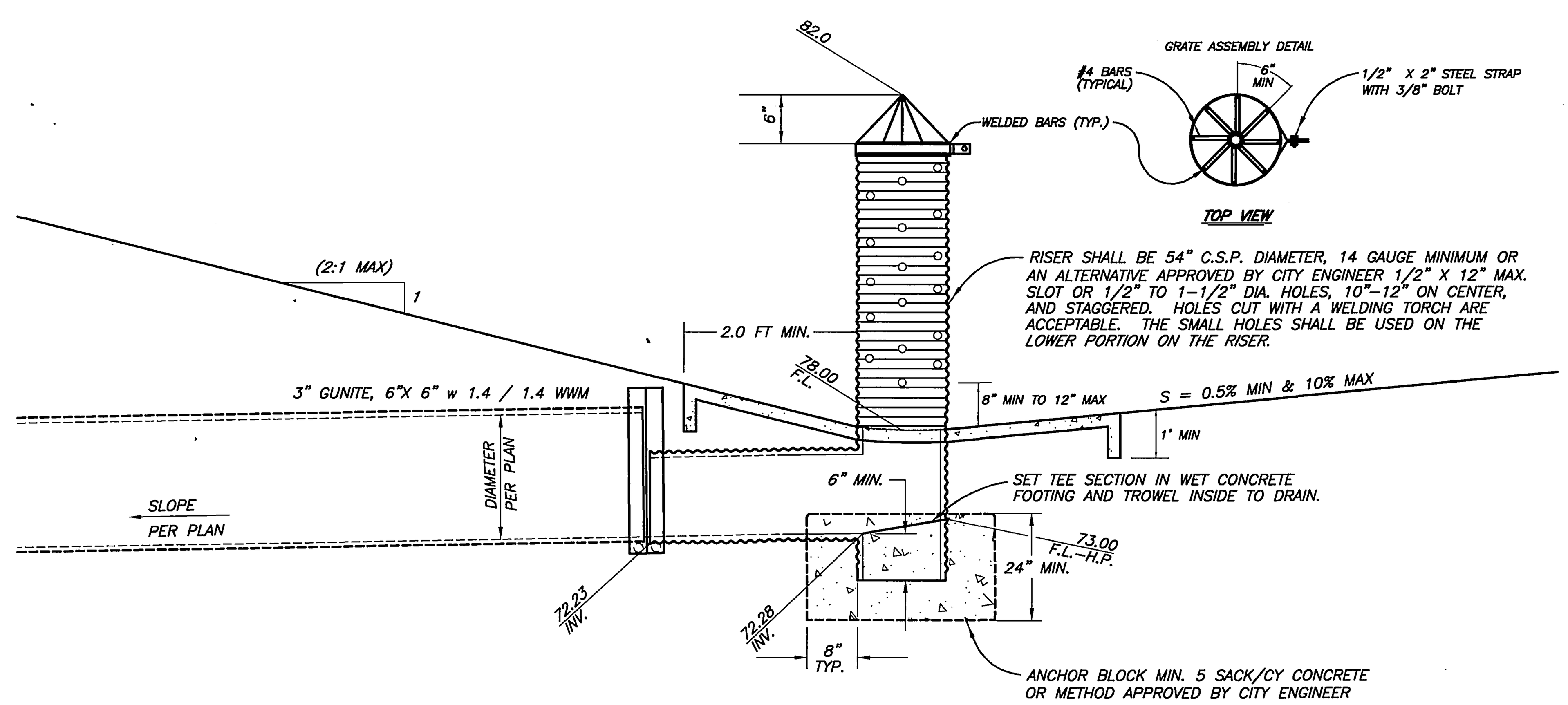

TEMPORARY DESILTING

N.T.S.

NOTE TO CONTRACTOR:

STORAGE

1. SEDIMENT FROM BASIN CLEANOUT OPERATIONS MUST BE DISPOSED OF IN SUCH A MANNER AS TO PREVENT ITS RETURN INTO THE DESILTING BASIN ORITS MOVEMENT INTO DOWNSTREAM AREAS DURING SUBSEQUENT RUNOFFS.
2. THE CONTRACTOR SHALL BE RESPONSIBLE AND SHALL TAKE NECESSARY PRECAUTIONS TO PREVENT PUBLIC TRESPASS ONTO AREAS WHERE IMPOUNDED WATER CREATES A HAZARDOUS CONDITION.

EMBANKMENT

1. ALL BORROW AREAS OUTSIDE THE POOL SHALL BE GRADED, SEEDED, AND LEFT IN SUCH A MANNER THAT THEY ARE WELL-DRAINED AND PROTECTED FROM EROSION.
2. THE MATERIAL SHALL BE FREE OF ALL SOD, ROOTS, WOODY VEGETATION, LARGE ROCK (EXCEEDING 12 INCHES IN DIAMETER), AND OTHER DEBRIS.
3. THE EMBANKMENT SHALL BE CONSTRUCTED TO AN ELEVATION WHICH PROVIDES FOR ANTICIPATED SETTLEMENT TO DESIGN ELEVATION (ALLOW 10% FOR SETTLEMENT).
4. THE FOUNDATION FOR THE EMBANKMENT SHALL BE SCARIFIED PRIOR TO PLACEMENT OF FILL.
5. PLACEMENT OF FILL MATERIAL SHALL BE STARTED AT THE LOWEST POINT OF THE FOUNDATION AND SHALL BE PLACE IN 6-INCH MAXIMUM LIFTS WHICH ARE TO BE CONTINUOUS OVER THE ENTIRE LENGTH OF THE FILL AND APPROXIMATELY HORIZONTAL. EMBANKMENT SHALL HAVE A RELATIVE COMPACTION OF AT LEAST 90%.
6. EMBANKMENT SIDE SLOPES SHALL BE NO STEEPER THAN 2:1.

SITE PREPARATION

1. THE EMBANKMENT FOUNDATION AREA AND RESERVOIR AREA SHALL BE CLEARED OF ALL TREES, STUMPS, ROOTS, BRUSH, BOULDERS, SOD, AND DEBRIS.
2. ALL TOPSOIL CONTAINING EXCESSIVE AMOUNTS OF ORGANIC MATTER SHALL BE REMOVED.

SITE ACCESS

1. ACCESS TO THE DESILTING BASINS SHALL BE MAINTAINED AT ALL TIMES WITH GRAVEL ROADS (OR EQUIVALENT).

MS3763 IP 990091

SEAL — REGISTERED PROFESSIONAL ENGINEER, KHALED A. OTHMAN, CIVIL, STATE OF CALIFORNIA

COUNTY OF RIVERSIDE
TRANSPORTATION DEPARTMENT

APPROVED BY:
KHALED OTHMAN 33950 — DATE: 3/7/00
CRISSMAN — RECOMMENDED — DATE: 07 MAR 00

* AS-BUILT PER PLANS 7-07-05 LH

Underground Service Alert
Call: TOLL FREE
1-800 227-2600
TWO WORKING DAYS BEFORE YOU DIG

PRIVATE ENGINEERING NOTE

CONSTRUCTION CONTRACTOR AGREES THAT IN ACCORDANCE WITH GENERALLY ACCEPTED CONSTRUCTION PRACTICES, CONSTRUCTION CONTRACTOR WILL BE REQUIRED TO ASSUME SOLE AND COMPLETE RESPONSIBILITY FOR JOB SITE CONDITIONS DURING THE COURSE OF CONSTRUCTION OF THE PROJECT, INCLUDING SAFETY OF ALL PERSONS AND PROPERTY; THAT THIS REQUIREMENT SHALL BE MADE TO APPLY CONTINUOUSLY AND NOT BE LIMITED TO NORMAL WORKING HOURS, AND CONSTRUCTION CONTRACTOR FURTHER AGREES TO DEFEND, INDEMNIFY AND HOLD DESIGN PROFESSIONAL HARMLESS FROM ANY AND ALL LIABILITY, REAL OR ALLEGED, IN CONNECTION WITH THE PERFORMANCE OF WORK ON THIS PROJECT, EXCEPTING LIABILITY ARISING FROM THE SOLE NEGLIGENCE OF DESIGN PROFESSIONAL.

BENCHMARK

RIVERSIDE COUNTY BENCHMARK, STAMPED VB8-64 AT SOUTHWEST CORNER OF PLUMMER ROAD AND VAN BUREN BOULEVARD. 259.0 FEET SOUTH OF VAN BUREN BOULEVARD. 205.0 FEET WEST OF PLUMMER ROAD, ON THE TOP OF A 4.0 FOOT x 10.0 FOOT GRANITE BOULDER A BRASS DISK FLUSH AND MARKED.
ELEV. 1638.14

REGISTERED PROFESSIONAL ENGINEER — Civil — Ned J. Araujo — No. 057835 — Exp. 6-30-02 — STATE OF CALIFORNIA

The Keith Companies TKC
22690 Cactus Avenue, Suite 300 Moreno Valley, CA 92553-9024 (909) 653-0234

APPROVED BY:
DATE: 1/17/00 — NED J. ARAUJO R.C.E. NO. 57835 REGISTRATION EXPIRES 06-30-02

MARK	REVISIONS:	APPR.	DATE

DESIGNED BY NJA DRAWN BY AN/AB CHECKED BY NJA

CITY OF RIVERSIDE
PUBLIC WORKS DEPARTMENT

APPROVED BY	DATE	BY
PRINCIPAL ENGINEER	4/13/2000	SC
PARK DEPARTMENT	—	—
TRAFFIC DIVISION	—	—
P.W. ENGINEER MANAGER	4/14/00	TJB
STREET SERVICES	1/18/00	

R. McGrath
PUBLIC WORKS DIRECTOR
DATE 4-19-00

STORM DRAIN IMPROVEMENT PLAN
OFF-SITE FOR TRACT 28863
DETAILS

HORIZ. SCALE: VERT. SCALE:

ACCOUNT NO. 31414.000

D - 672

SHEET 3 OF 5

Plotted: 10/13/99 16:48:51 : N:\31414.000\dwg\storm_drain\PRSD0003.dwg

INDEXED 7-19-2000 LH

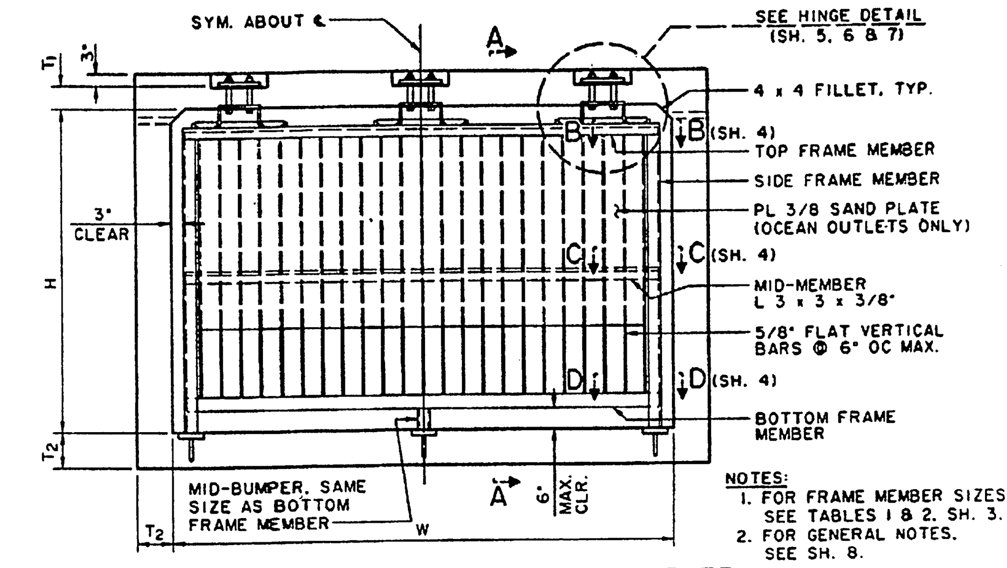

NOTES:
1. FOR FRAME MEMBER SIZES, SEE TABLES 1 & 2, SH. 3.
2. FOR GENERAL NOTES, SEE SH. 8.

THREE HINGED INLET/OUTLET BARRIER

FOR RCB

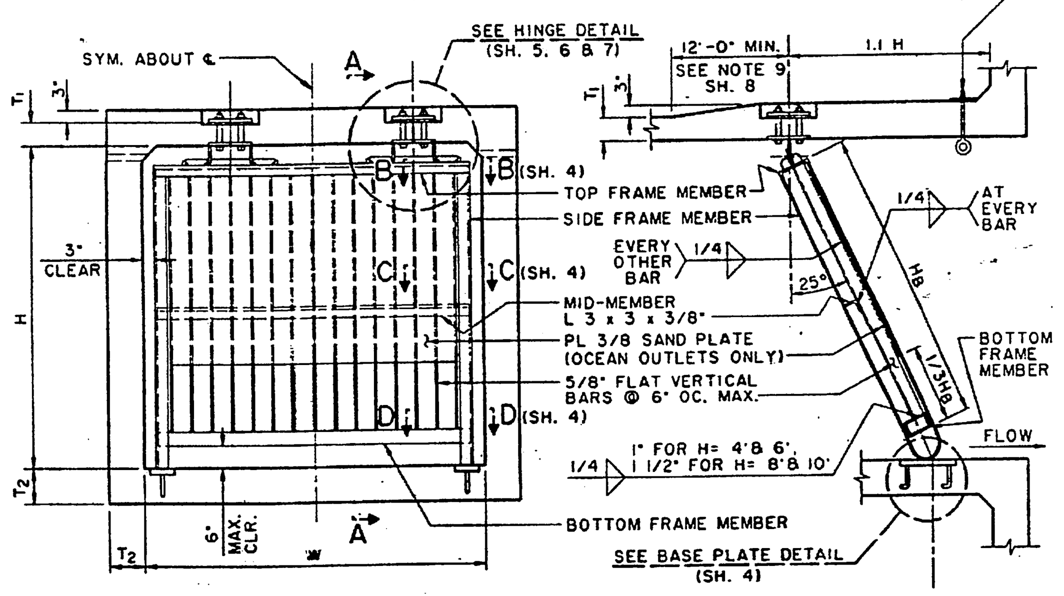

TWO HINGED INLET/OUTLET BARRIER — SECTION A-A

FOR RCB

NOTE:
FOR FRAME MEMBER SIZES, SEE TABLES 1 & 2, SH. 3.
FOR CONNECTION DETAILS, SEE SH. 4.

AMERICAN PUBLIC WORKS ASSOCIATION – SOUTHERN CALIFORNIA CHAPTER		
PROMULGATED BY THE APWA-AGC JOINT COOPERATIVE COMMITTEE 1993	**SLOPED PROTECTION BARRIER**	STANDARD PLAN **360-0**
	USE WITH STANDARD SPECIFICATIONS FOR PUBLIC WORKS CONSTRUCTION	SHEET 1 OF 8

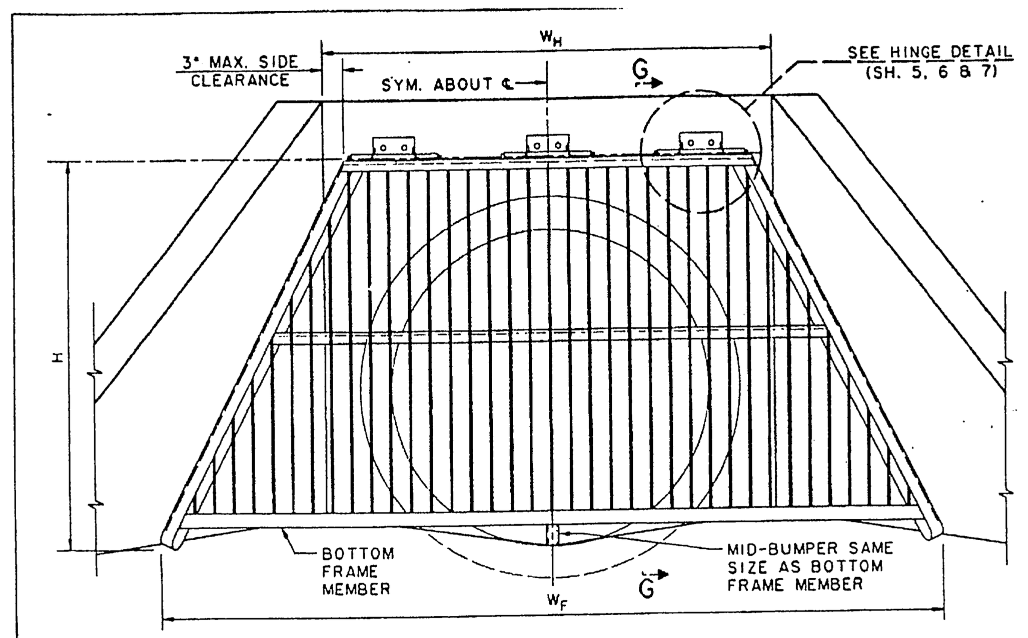

FRONT ELEVATION

NOTES:
1. FOR FRAME MEMBER SIZE, SEE TABLE 1, SH. 3.
2. FOR CONNECTION DETAILS SEE SH. 4.

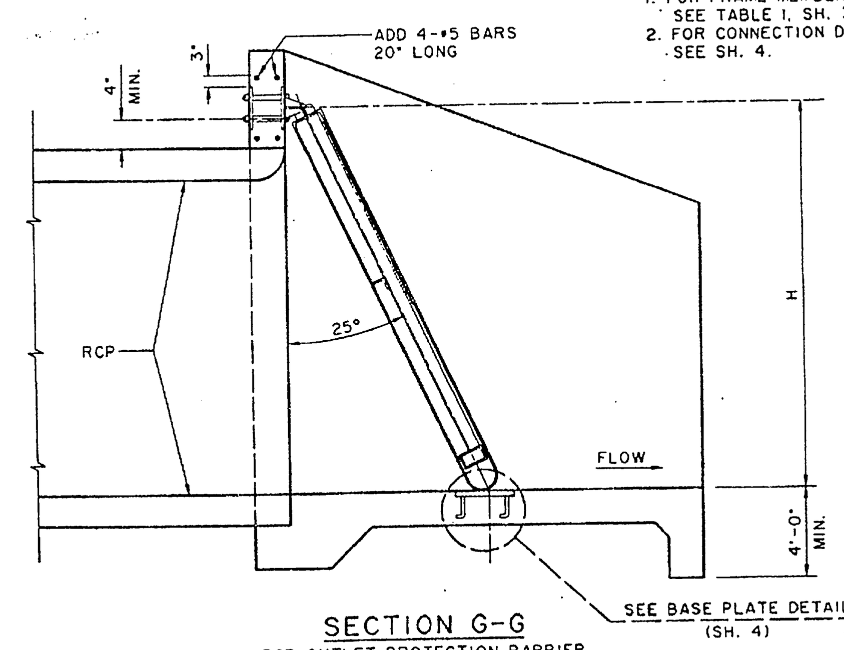

SECTION G-G

RCP OUTLET PROTECTION BARRIER

AMERICAN PUBLIC WORKS ASSOCIATION – SOUTHERN CALIFORNIA CHAPTER	STANDARD PLAN
SLOPED PROTECTION BARRIER	**360-0** SHEET 2 OF 8

TABLE 1: STANDARD INLET/OUTLET, BOX OR PIPE, RECTANGULAR OR TRAPEZOIDAL SHAPED PROTECTION BARRIERS.
NOTE 1: FOR TRAPEZOIDAL SHAPED PROTECTION BARRIERS, USE W_H TO DETERMINE NUMBER AND SIZE OF HINGES, AND USE W_F TO DETERMINE REQUIRED FRAME MEMBER SIZES. (FOR W_H AND W_F, SEE SH. 2)

TABLE 1: INLET/OUTLET SLOPED PROTECTION BARRIER

BOX SIZE W x H (FT.)	NO. OF HINGES	HINGE SIZE	VERTICAL BAR SIZE (INCHES)	TOP FRAME MEMBER SIZE	SIDE FRAME MEMBER SIZE	BOTTOM FRAME MEMBER SIZE
4x4	2	12"	1x1/2	C 4x7.25	C 4x7.25	TS 2x2x.250
4x6	2	12"	2x1/2	C 4x7.25	C 4x7.25	TS 2x2x.250
4x8	2	12"	3x1/2	C 5x9	C 5x9	TS 3x3x.250
6x4	2	18"	1x1/2	C 4x7.25	C 4x7.25	TS 2x2x.250
6x6	2	18"	2x1/2	C 4x7.25	C 4x7.25	TS 2.5x2.5x.250
6x8	2	18"	3x1/2	C 5x9	C 5x9	TS 3.5x3.5x.250
6x10	2	18"	4 1/2x1/2	C 6x10.5	C 6x10.5	TS 4.5x4.5x.250
8x4	3	12"	1x1/2	C 4x7.25	C 4x7.25	TS 2x2x.250
8x6	3	12"	2x1/2	C 4x7.25	C 4x7.25	TS 2.5x2.5x.250
8x8	3	12"	3x1/2	C 5x9	C 5x9	TS 3x3x.250
8x10	3	12"	4 1/2x1/2	C 6x10.5	C 6x10.5	TS 4.5x4.5x.250
10x6	3	18"	2x1/2	C 4x7.25	C 4x7.25	TS 2.5x2.5x.250
10x8	3	18"	3x1/2	C 5x9	C 5x9	TS 3.5x3.5x.250
10x10	3	18"	4 1/2x1/2	C 6x10.5	C 6x10.5	TS 4.5x4.5x.250
12x6	3	24"	2x1/2	C 5x9	C 5x9	TS 3x3x.250
12x8	3	24"	3x1/2	C 5x9	C 5x9	TS 3.5x3.5x.250
12x10	3	24"	4 1/2x1/2	C 6x10.5	C 6x10.5	TS 4.5x4.5x.250
14x6	3	24"	2x1/2	C 5x9	C 5x9	TS 3x3x.250
14x8	3	24"	3x1/2	C 6x10.5	C 6x10.5	TS 4x4x.250
14x10	3	24"	4 1/2x1/2	C 7x12.25	C 7x12.25	TS 5x5x.250

TABLE 2: BOX OCEAN OUTLET PROTECTION BARRIERS WITH OR WITHOUT SAND BARRIER PLATE.

TABLE 2: OCEAN OUTLET SLOPED PROTECTION BARRIER

BOX SIZE W x H (FT.)	NO. OF HINGES	HINGE SIZE	VERTICAL BAR SIZE (INCHES)	TOP FRAME MEMBER SIZE	SIDE FRAME MEMBER SIZE	BOTTOM FRAME MEMBER SIZE
4x4	2	12"	2 1/2x5/8	C 5x9	C 5x9	TS 3x3x.250
4x6	2	12"	3 3/4x5/8	C 6x13	C 6x8.2	TS 4x2x.313
4x8	2	12"	5 1/4x5/8	C 8x18.75	C 8x11.5	TS 6x2x.250
6x4	2	18"	2 1/2x5/8	C 6x13	C 6x8.2	TS 4x3x.313
6x6	2	18"	3 3/4x5/8	C 6x13	C 6x8.2	TS 4x4x.500
6x8	2	18"	5 1/4x5/8	C 8x18.75	C 8x11.5	TS 6x4x.375
6x10	2	18"	6 1/2x5/8	C 9x20	C 9x13.4	TS 7x4x.375
8x4	3	12"	2 1/2x5/8	C 5x9	C 5x9	TS 3x3x.250
8x6	3	12"	3 3/4x5/8	C 6x13	C 6x8.2	TS 4x3x.250
8x8	3	12"	5 1/4x5/8	C 8x18.75	C 8x11.5	TS 6x2x.250
8x10	3	12"	6 1/2x5/8	C 9x20	C 9x13.4	TS 7x3x.250
10x6	3	18"	3 3/4x5/8	C 6x13	C 6x8.2	TS 4x4x.313
10x8	3	18"	5 1/4x5/8	C 8x18.75	C 8x11.5	TS 6x4x.313
10x10	3	18"	6 1/2x5/8	C 9x20	C 9x13.4	TS 7x3x.313
12x6	3	24"	3 3/4x5/8	C 7x14.75	C 7x9.8	TS 5x4x.313
12x8	3	24"	5 1/4x5/8	C 8x18.75	C 8x11.5	TS 6x4x.375
12x10	3	24"	6 1/2x5/8	C 9x20	C 9x13.4	TS 7x4x.375
14x6	3	24"	3 3/4x5/8	C 8x18.75	C 8x11.5	TS 6x4x.375
14x8	3	24"	5 1/4x5/8	C 8x18.75	C 8x11.5	TS 6x6x.375
14x10	3	24"	6 1/2x5/8	C 9x20	C 9x13.4	TS 7x5x.500

AMERICAN PUBLIC WORKS ASSOCIATION – SOUTHERN CALIFORNIA CHAPTER	STANDARD PLAN
SLOPED PROTECTION BARRIER	**360-0** SHEET 3 OF 8

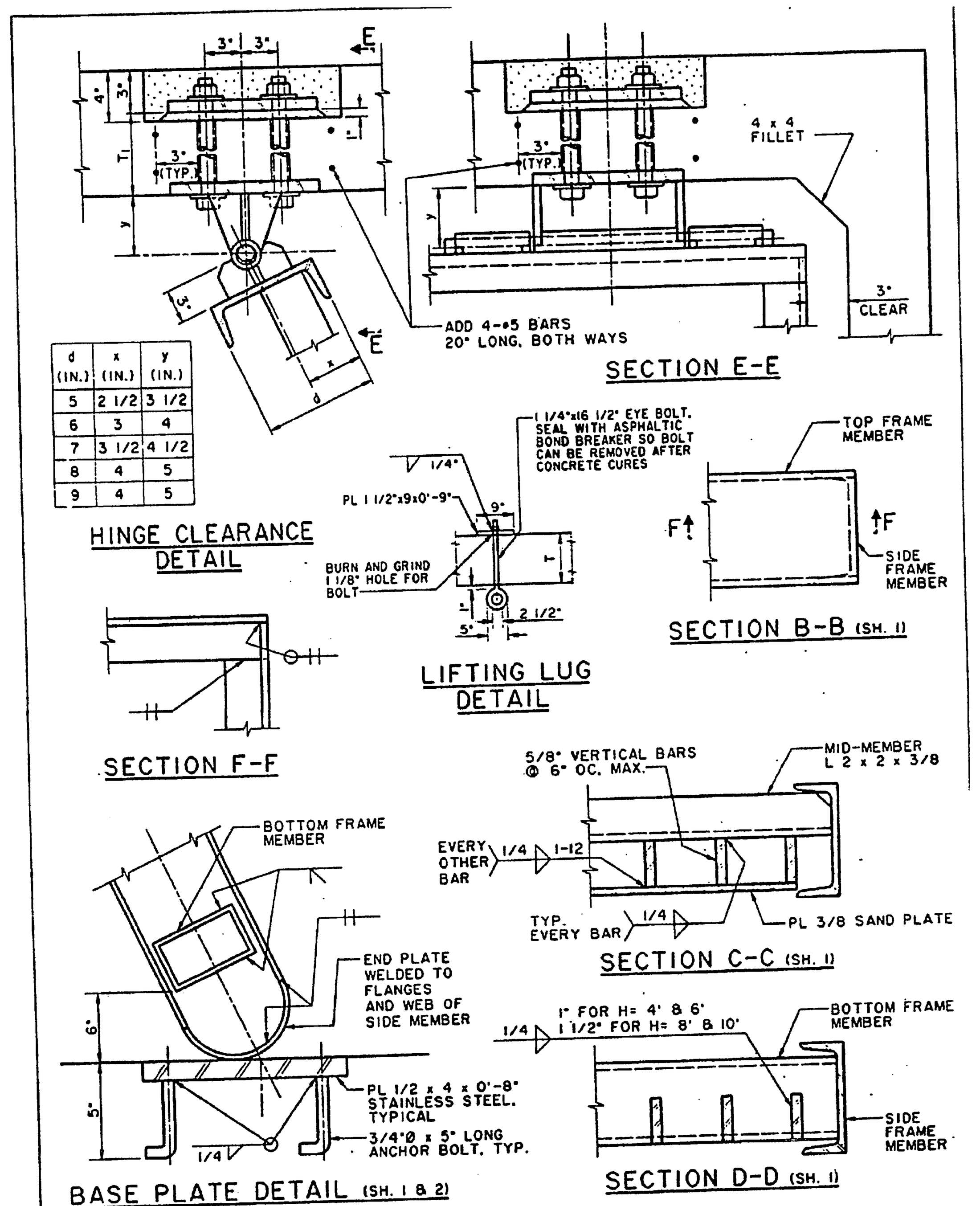

d (IN.)	x (IN.)	y (IN.)
5	2 1/2	3 1/2
6	3	4
7	3 1/2	4 1/2
8	4	5
9	4	5

AMERICAN PUBLIC WORKS ASSOCIATION – SOUTHERN CALIFORNIA CHAPTER	STANDARD PLAN
SLOPED PROTECTION BARRIER	**360-0** SHEET 4 OF 8

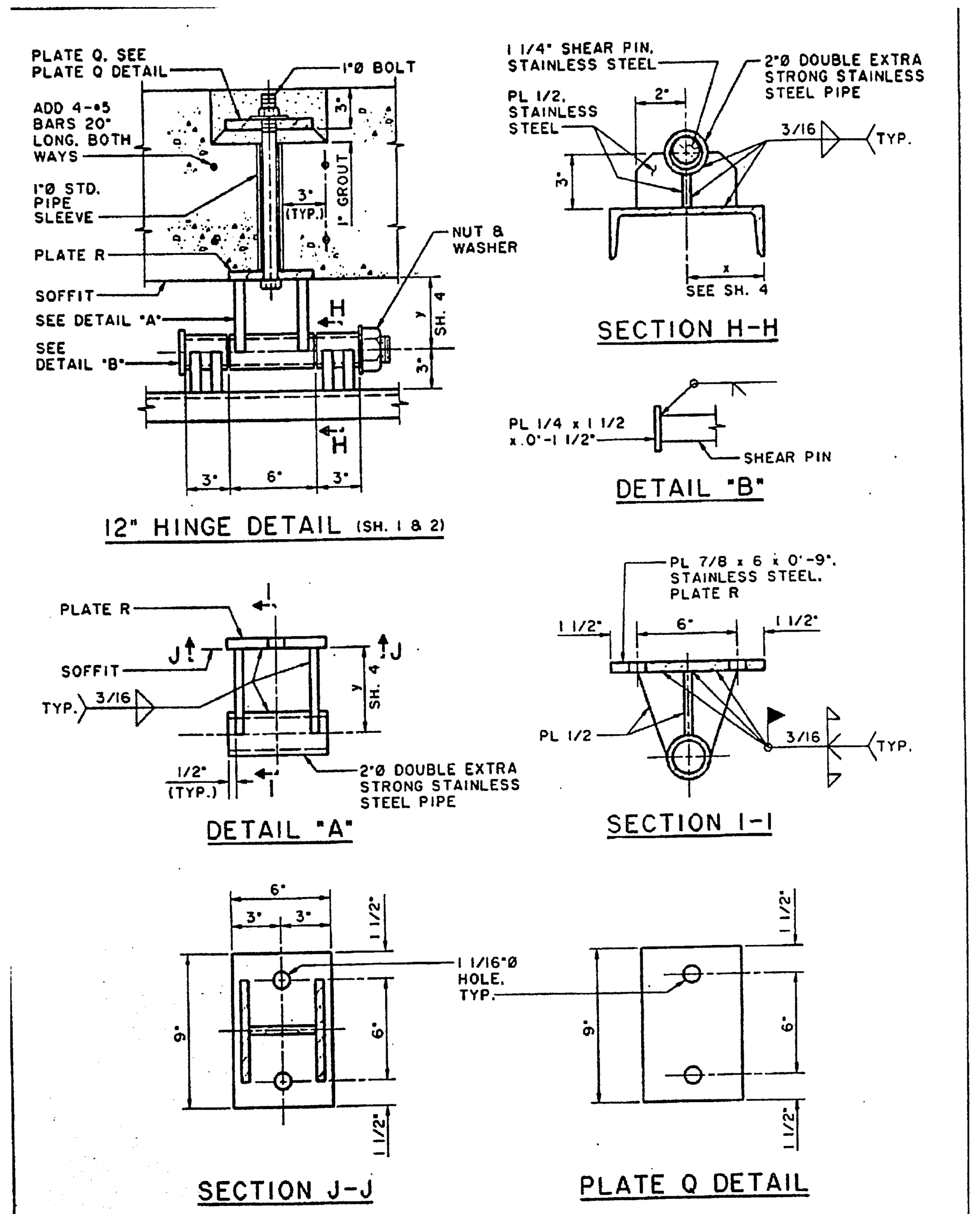

AMERICAN PUBLIC WORKS ASSOCIATION – SOUTHERN CALIFORNIA CHAPTER	STANDARD PLAN
SLOPED PROTECTION BARRIER	**360-0** SHEET 5 OF 8

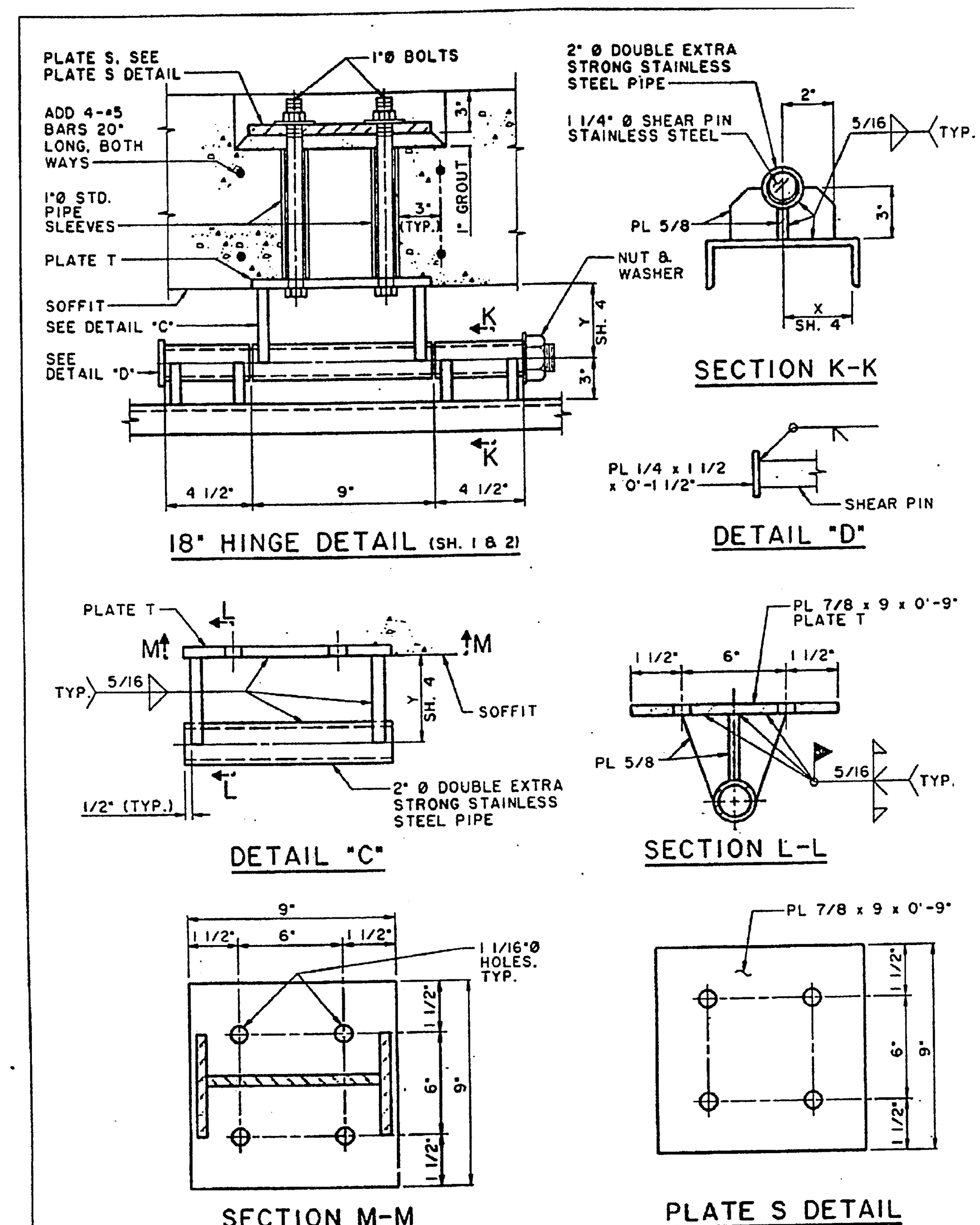

AMERICAN PUBLIC WORKS ASSOCIATION – SOUTHERN CALIFORNIA CHAPTER	STANDARD PLAN
SLOPED PROTECTION BARRIER	**360-0** SHEET 6 OF 8

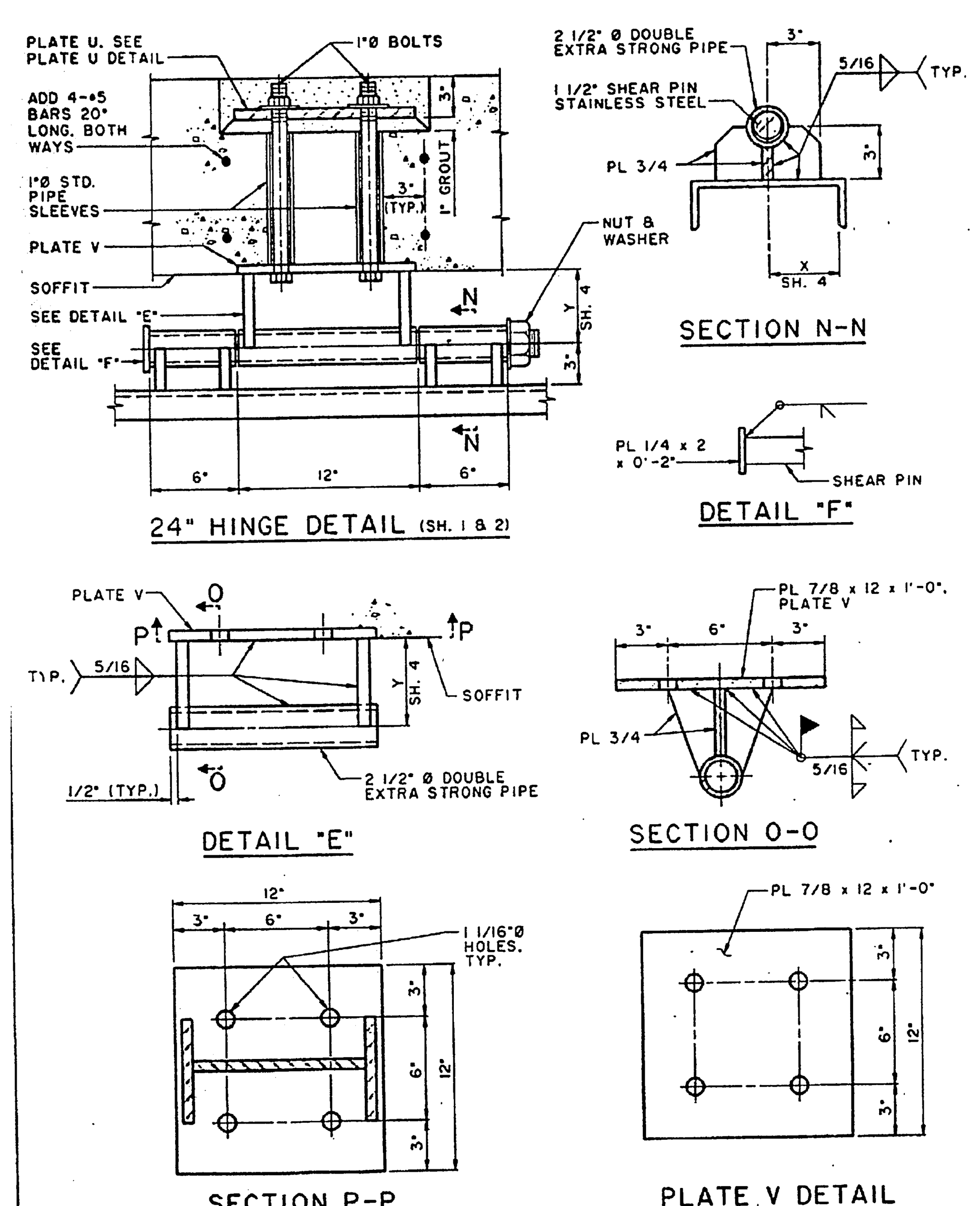

AMERICAN PUBLIC WORKS ASSOCIATION – SOUTHERN CALIFORNIA CHAPTER	STANDARD PLAN
SLOPED PROTECTION BARRIER	**360-0** SHEET 7 OF 8

NOTES
1. WHENEVER RCB SIZE FALLS BETWEEN SIZES SHOWN ON THE TABLE, THE NEXT LARGER SIZE SHALL BE USED.
2. ALL FRAME MEMBERS SHALL BE ASTM A 36 STEEL OR BETTER.
3. ALL HINGE ASSEMBLIES AND BASE PLATES SHALL BE STAINLESS STEEL.
4. THE CONTRACTOR SHALL MAKE ANY NECESSARY MODIFICATIONS TO ALLOW FOR THE SIMPLE REMOVAL OR INSERTION OF HINGE PINS IN ORDER TO INSTALL OR REMOVE THE PROTECTION BARRIER. ENDS OF HINGE PINS SHALL BE THREADED IN ORDER THAT NUTS AND LOCK WASHERS WILL BE FLUSH WITH THE HINGE PIPE. THREADS BEYOND THE NUT FACE SHALL BE DAMAGED TO PREVENT REMOVAL.
5. ALL FRAME MEMBERS SHALL BE GALVANIZED AFTER FABRICATION.
6. IF FIELD WELDS ARE NECESSARY, GALVICON, GALVALLOY OR AGENCY APPROVED EQUAL SHALL BE USED FOR COATING.
7. MID-BUMPER SHALL BE USED FOR 3 HINGED BARRIERS.
8. ANY DEVIATIONS OR MODIFICATIONS TO THIS STANDARD SHALL BE APPROVED BY THE AGENCY.
9. AT OCEAN OUTLETS OR WHEREVER THE TOP SLAB SERVES AS A PUBLIC WALKWAY, THE TOP SLAB THICKNESS SHALL BE INCREASED BY 3" IN ORDER TO PROVIDE A RECESS FOR THE HINGE TOP PLATE. THE RECESS SHALL BE BACKFILLED WITH GROUT AND SMOOTHED AS SHOWN.
10. PROTECTION BARRIERS FOR RCB CONDUITS SHALL BE SLOPED TO SWING OPEN IN THE DIRECTION OF FLOW.
11. MEMBERS SHALL BE SELECTED FROM TABLE 1 UNLESS OTHERWISE NOTED.
12. DESIGN LOADS:
    A. INLET/OUTLET: BULKED EFD = 85 PCF
    B. OCEAN OUTLETS:
        1. 1800 PSF @ SAND PLATE AREA
        2. 600 PSF @ LOWER OPEN AREA

SLOPED PROTECTION BARRIER	360-0

MS 3763 IP 990091

COUNTY OF RIVERSIDE TRANSPORTATION DEPARTMENT

SEAL: REGISTERED PROFESSIONAL ENGINEER — KHALED A. OTHMAN — No. 33950 — EXP. 6-30-02 — CIVIL — STATE OF CALIFORNIA

APPROVED BY:
KHALED OTHMAN 33950 — DATE 3/7/00
CRISMAN — RECOMMENDED — DATE 07 MAR 00

*AS-BUILT PER PLANS 7-07-05 LH

CALL BEFORE YOU DIG — Underground Service Alert — Call: TOLL FREE 1-800 227-2600 — TWO WORKING DAYS BEFORE YOU DIG

PRIVATE ENGINEERING NOTE

CONSTRUCTION CONTRACTOR AGREES THAT IN ACCORDANCE WITH GENERALLY ACCEPTED CONSTRUCTION PRACTICES, CONSTRUCTION CONTRACTOR WILL BE REQUIRED TO ASSUME SOLE AND COMPLETE RESPONSIBILITY FOR JOB SITE CONDITIONS DURING THE COURSE OF CONSTRUCTION OF THE PROJECT, INCLUDING SAFETY OF ALL PERSONS AND PROPERTY; THAT THIS REQUIREMENT SHALL BE MADE TO APPLY CONTINUOUSLY AND NOT BE LIMITED TO NORMAL WORKING HOURS, AND CONSTRUCTION CONTRACTOR FURTHER AGREES TO DEFEND, INDEMNIFY AND HOLD DESIGN PROFESSIONAL HARMLESS FROM ANY AND ALL LIABILITY, REAL OR ALLEGED, IN CONNECTION WITH THE PERFORMANCE OF WORK ON THIS PROJECT, EXCEPTING LIABILITY ARISING FROM THE SOLE NEGLIGENCE OF DESIGN PROFESSIONAL.

BENCHMARK

RIVERSIDE COUNTY BENCHMARK, STAMPED VB8-64 AT SOUTHWEST CORNER OF PLUMMER ROAD AND VAN BUREN BOULEVARD. 259.0 FEET SOUTH OF VAN BUREN BOULEVARD. 205.0 FEET WEST OF PLUMMER ROAD, ON THE TOP OF A 4.0 FOOT x 10.0 FOOT GRANITE BOULDER A BRASS DISK FLUSH AND MARKED.
ELEV. 1638.14

SEAL: REGISTERED PROFESSIONAL ENGINEER — Civil — Ned J. Araujo — No. 057835 — Exp. 6-30-02 — STATE OF CALIFORNIA

The Keith Companies TKC
22690 Cactus Avenue, Suite 300 Moreno Valley, CA 92553-9024 (909) 653-0234

APPROVED BY:
DATE: 10/14/99
NED J. ARAUJO R.C.E. NO. 57835
REGISTRATION EXPIRES 06-30-02

MARK	REVISIONS:	APPR.	DATE

DESIGNED BY NJA DRAWN BY AN/AB CHECKED BY NJA

CITY OF RIVERSIDE
PUBLIC WORKS DEPARTMENT

APPROVED BY	DATE	BY
PRINCIPAL ENGINEER	4/13/2000	
PARK DEPARTMENT	—	—
TRAFFIC DIVISION	—	—
P.W. ENGINEER MANAGER	4/14/00	TMB

R. Mc Grath
PUBLIC WORKS DIRECTOR
DATE 4-14-00

STORM DRAIN IMPROVEMENT PLAN
OFF-SITE FOR TRACT 28863
DETAILS

HORIZ. SCALE: VERT. SCALE:

ACCOUNT NO. 31414.000

D - 672

SHEET 4 OF 5

Plotted: 10/13/99 17:04:30 : N:\31414.000\dwo\storm_drain\PRSD0004.dwg

INDEXED 7-19-2000 LH

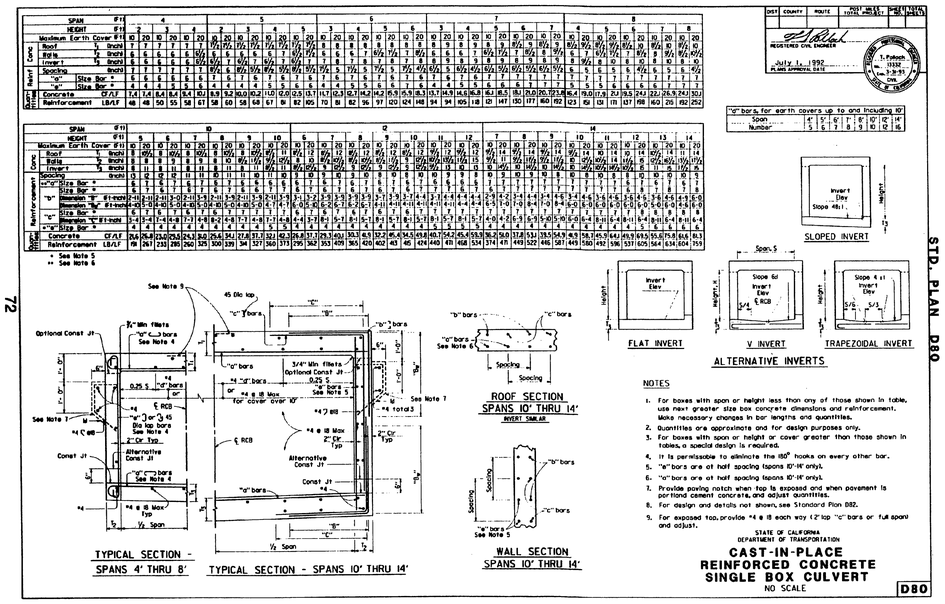

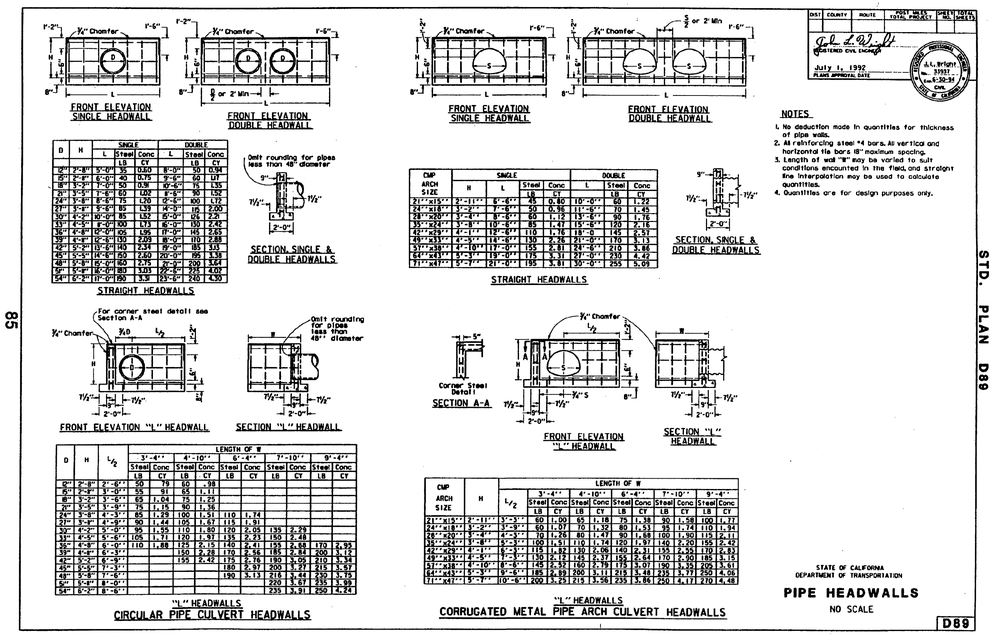

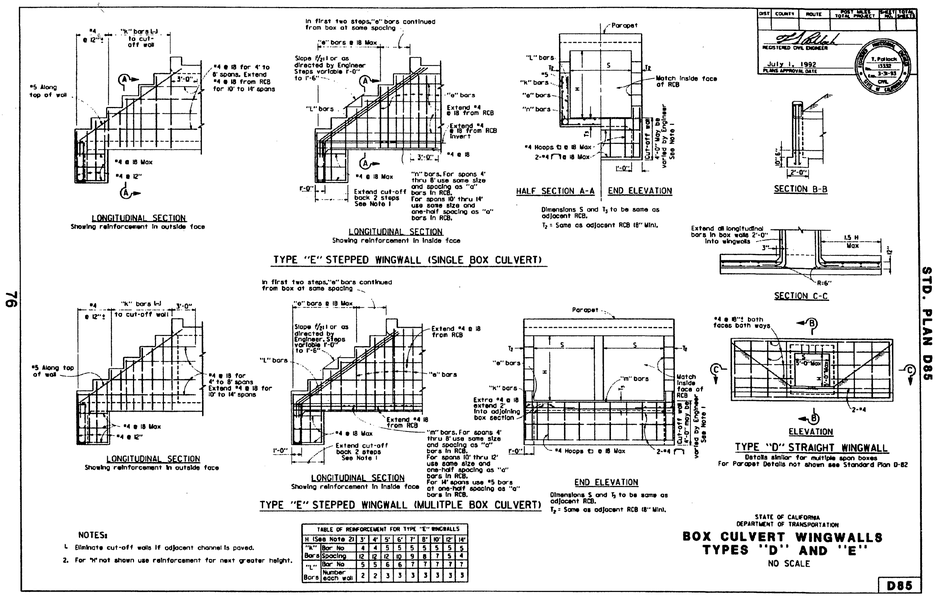

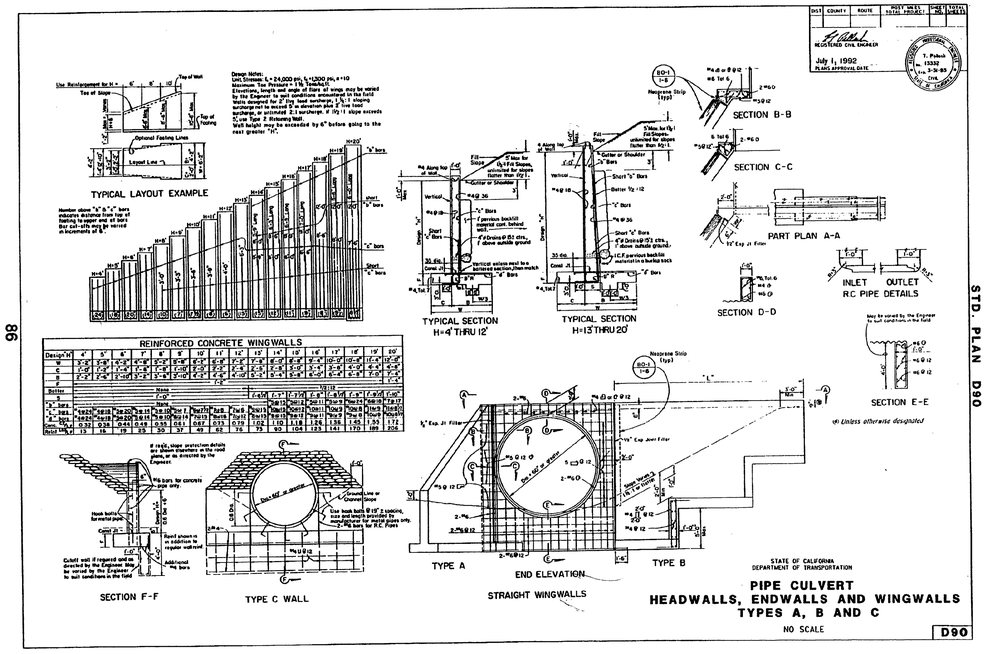

SEAL

MS3763 IP 990091

COUNTY OF RIVERSIDE
TRANSPORTATION DEPARTMENT

APPROVED BY:

KHALED OTHMAN 33950 — DATE: 3/7/00

RECOMMENDED: L.B. LIJMAN — DATE: 07 MAR 00

* AS-BUILT PER PLANS 7-07-05 KH

Underground Service Alert
Call: TOLL FREE
1-800 227-2600
TWO WORKING DAYS BEFORE YOU DIG

PRIVATE ENGINEERING NOTE

CONSTRUCTION CONTRACTOR AGREES THAT IN ACCORDANCE WITH GENERALLY ACCEPTED CONSTRUCTION PRACTICES, CONSTRUCTION CONTRACTOR WILL BE REQUIRED TO ASSUME SOLE AND COMPLETE RESPONSIBILITY FOR JOB SITE CONDITIONS DURING THE COURSE OF CONSTRUCTION OF THE PROJECT, INCLUDING SAFETY OF ALL PERSONS AND PROPERTY; THAT THIS REQUIREMENT SHALL BE MADE TO APPLY CONTINUOUSLY AND NOT BE LIMITED TO NORMAL WORKING HOURS, AND CONSTRUCTION CONTRACTOR FURTHER AGREES TO DEFEND, INDEMNIFY AND HOLD DESIGN PROFESSIONAL HARMLESS FROM ANY AND ALL LIABILITY, REAL OR ALLEGED, IN CONNECTION WITH THE PERFORMANCE OF WORK ON THIS PROJECT, EXCEPTING LIABILITY ARISING FROM THE SOLE NEGLIGENCE OF DESIGN PROFESSIONAL.

BENCHMARK

RIVERSIDE COUNTY BENCHMARK, STAMPED 1SB-64 AT SOUTHWEST CORNER OF PLUMMER ROAD AND VAN BUREN BOULEVARD. 259.0 FEET SOUTH OF VAN BUREN BOULEVARD. 205.0 FEET WEST OF PLUMMER ROAD, ON THE TOP OF A 4.0 FOOT x 10.0 FOOT GRANITE BOULDER A BRASS DISK FLUSH AND MARKED.
ELEV. 1638.14

REGISTERED PROFESSIONAL ENGINEER — Civil — Ned J. Araujo — No. 057835 — Exp. 6-30-02 — STATE OF CALIFORNIA

The Keith Companies TKC
22690 Cactus Avenue, Suite 300 Moreno Valley, CA 92553-9024 (909) 653-0224

APPROVED BY: NED J. ARAUJO R.C.E. NO. 57835
DATE: 10/14/99 REGISTRATION EXPIRES 06-30-02

MARK	REVISIONS:	APPR.	DATE

DESIGNED BY NJA DRAWN BY AN/AB CHECKED BY NJA

CITY OF RIVERSIDE
PUBLIC WORKS DEPARTMENT

APPROVED BY	DATE	BY
PRINCIPAL ENGINEER	4/18/2000	
PARK DEPARTMENT	—	—
TRAFFIC DIVISION	—	—
P.W. ENGINEER MANAGER	4/21/00	
STREET SERVICES	10/26/99	

R. McDonald
PUBLIC WORKS DIRECTOR
DATE 4-19-00

STORM DRAIN IMPROVEMENT PLAN
OFF-SITE FOR TRACT 28863
DETAILS

HORIZ. SCALE: VERT. SCALE:

ACCOUNT NO. 31414.000

D - 672

SHEET 5 OF 5

INDEXED 7-19-2000 KH

Plotted: 10/13/99 17:05:41 - N:\31414.000\dwg\storm_drain\PRS00005.dwg