STORM DRAIN IMPROVEMENT PLANS

TRACT 28866-5&6, IN THE CITY OF RIVERSIDE

LINE "E" & LINE "F" △

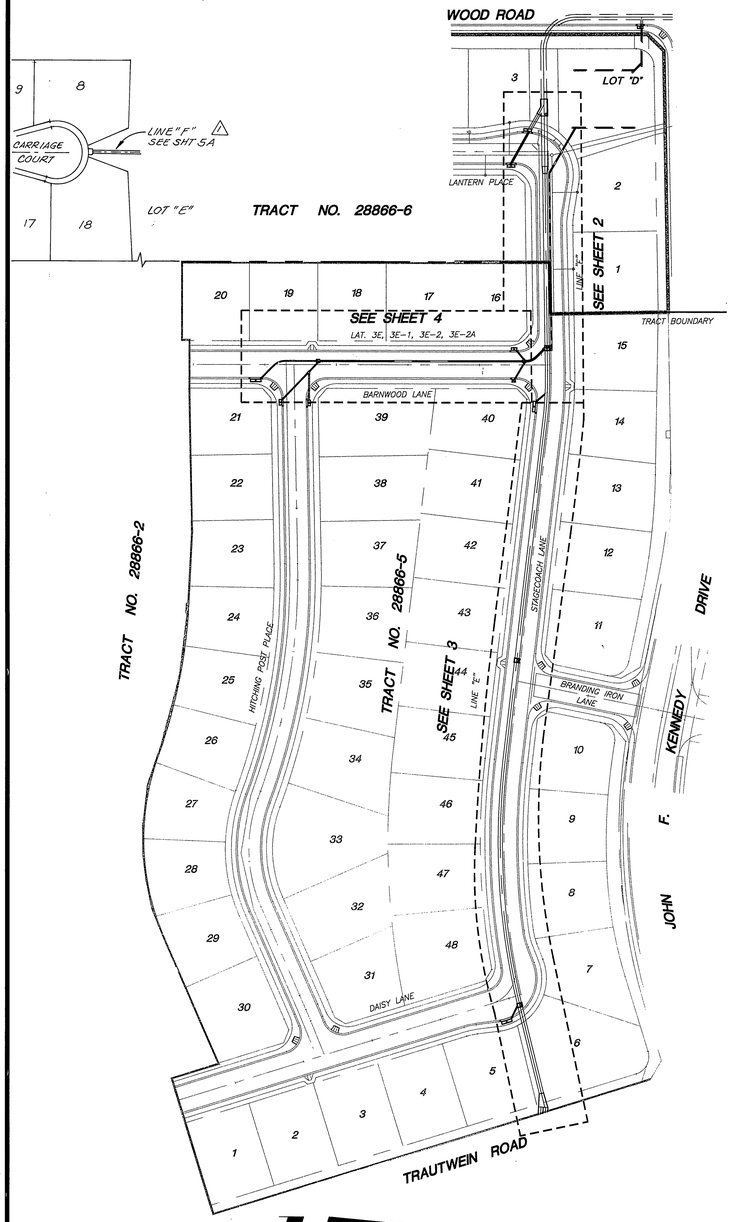

SCALE: 1" = 100'

INDEX MAP

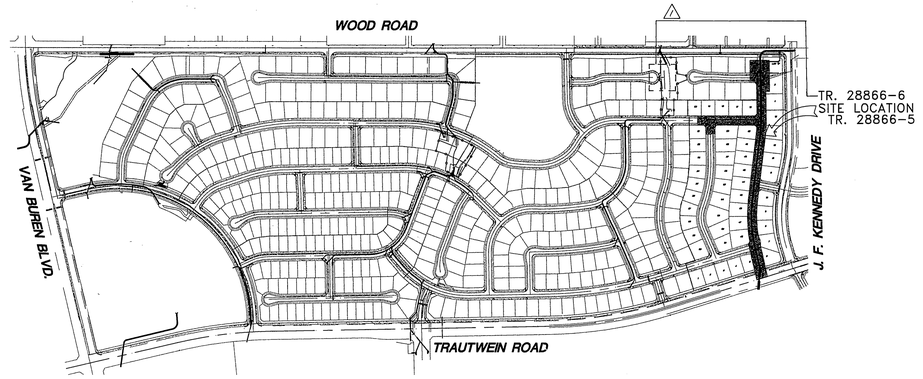

KEY MAP
NO SCALE

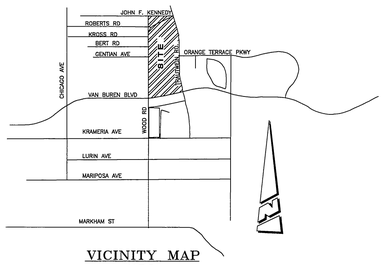

VICINITY MAP
N.T.S.

△ (19)	REMOVE AND DISPOSE OF EXISTING UNDERSIDEWALK DRAIN 8" PIPE, PORTION OF SIDEWALK, CURB/GUTTER, REPLACE SIDEWALK AS NECESSARY		1 LS
	CONSTRUCTION NOTES & QUANTITY ESTIMATE QUANTITY ESTIMATE IS FOR BONDING PREPOSSESS ONLY. CONTRACTOR SHALL VERIFY ALL QUANTITIES PRIOR TO CONSTRUCTION	TR. 28866 -5	TR. 28866 -6
(1)	CONSTRUCT 18" RCP (D-LOAD PER PLAN)	237 L.F.	~~90~~	△1
(2)	CONSTRUCT 24" RCP (D-LOAD PER PLAN)	315 L.F.	---	
(3)	CONSTRUCT 30" RCP (D-LOAD PER PLAN)	31 L.F.	52 L.F.	
(4)	CONSTRUCT 72" RCP (D-LOAD PER PLAN)	1150 L.F.	124 L.F.	
(5)	CONSTRUCT CATCH BASIN PER CITY STD. 405 (W & V PER PLAN)	6 EA.	~~4~~ 5 EA.	△1
(6)	CONSTRUCT MANHOLE AX PER CITY STD. 430	2 EA.	---	
(7)	CONSTRUCT MANHOLE EZ PER CITY STD. 431	1 EA.	---	
(8)	CONSTRUCT MANHOLE JM PER CITY STD. 432	1 EA.	1 EA.	
(9)	CONSTRUCT JUNCTION STRUCTURE C PER CITY STD. 422	2 EA.	---	
(10)	CONSTRUCT JUNCTION STRUCTURE 4 PER CITY STD. 423	1 EA.	---	
(11)	CONSTRUCT TRANSITION STRUCTURE PER R.C.F.C. & W.C.D. STD. 301	1 EA.	1 EA.	
(12)	CONSTRUCT 5' X 8' CAST-IN-PLACE REINFORCED CONCRETE SINGLE BOX CULVERT PER CALTRANS STD. D80.	---	70 L.F.	
(13)	CONSTRUCT 54" RCP (D-LOAD PER PLAN)	---	24 L.F.	
(14)	CONSTRUCT CATCH BASIN OUTLET TRANSITION STRUCTURE PER CITY STD. 404	---	1 EA.	
△1 (15)	CONSTRUCT HEADWALL PER CALTRANS STD. D89		1 EA	
△1 (16)	CONSTRUCT SLOPED PROTECTION BARRIER PER APWA STD 360-0		1 EA	
△1 (17)	CONSTRUCT FULL DEPTH AC PAVING		4 SF	
△1 (18)	REMOVE & RECONSTRUCT RIP-RAP AS NECESSARY		1 LS	

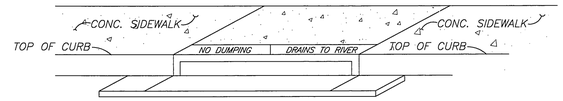

CATCH BASIN STENCILING DETAIL
N.T.S.

(A) STENCILS TO HAVE 2" LETTERS AS FOLLOWS :
NO DUMPING
DRAINS TO RIVER

(B) PLACE BOTH STENCILS CENTERED WITHIN THE CATCHBASIN OPENING AND WITHIN THE TOP OF CURB.

(C) SPRAY BOTH STENCILS WITH WHITE PAINT.

(D) REMOVE STENCILS WHEN PAINT IS DRY.

GENERAL NOTES

1. IT SHALL BE THE RESPONSIBILITY OF THE CONTRACTOR TO CLEAR THE RIGHT-OF-WAY IN ACCORDANCE WITH THE PROVISIONS OF LAW AS IT AFFECTS EACH UTILITY INCLUDING IRRIGATION LINES AND APPURTENANCES AND AT NO COST TO THE CITY.
2. CONSTRUCTION SHALL BE IN ACCORDANCE WITH THE CITY OF RIVERSIDE DEPT. OF PUBLIC WORKS STANDARD DRAWINGS, IT'S SUPPLEMENTAL NOTES, AND THE STANDARD SPECIFICATIONS FOR PUBLIC WORKS CONSTRUCTION, CURRENT EDITION.
3. THE PRIVATE ENGINEER SIGNING THESE PLANS IS RESPONSIBLE FOR ASSURING THE ACCURACY AND ACCEPTABILITY OF THE WORK HEREON. IN THE EVENT OF DISCREPANCIES ARISING DURING CONSTRUCTION, THE PRIVATE ENGINEER SHALL BE RESPONSIBLE FOR DETERMINING AN ACCEPTABLE SOLUTION AND REVISING THE PLANS FOR APPROVAL BY THE CITY.
4. QUANTITIES SHOWN ARE FOR INFORMATION ONLY AND THE CITY OF RIVERSIDE IS NOT RESPONSIBLE FOR THEIR ACCURACY.
5. THE DEVELOPER SHALL BE RESPONSIBLE FOR PRESERVING OR RE-ESTABLISHING AND REFERENCING SURVEY MONUMENTS DESTROYED, DISTURBED OR BURIED AS A RESULT OF CONSTRUCTION SHOWN HEREON.
6. ALL FLAGGED ELEVATIONS SHALL BE STAKED IN THE FIELD BY THE PRIVATE ENGINEER.
7. ALL STATIONING REFERS TO CENTERLINE OF CONSTRUCTION UNLESS OTHERWISE NOTED. STATIONING FOR LATERALS AND CONNECTOR PIPES REFER TO THE CENTERLINE-CENTERLINE INTERSECTION.
8. HOURS OF OPERATION ARE 7 A.M. TO 6 P.M. MONDAY THROUGH FRIDAY. DUST SHALL BE CONTROLLED BY WATERING OR OTHER APPROVED METHODS.
9. NO PERSON SHALL PERFORM ANY CONSTRUCTION ACTIVITY OR INSTALL ANY OBJECTS WITHIN THE PUBLIC RIGHTS-OF-WAY OR EASEMENTS OF THE CITY OF RIVERSIDE WITHOUT A VALID CONSTRUCTION PERMIT OR A STREET OPENING PERMIT OR AN ENCROACHMENT PERMIT ISSUED BY THE CITY'S PUBLIC WORKS DEPARTMENT.
10. ANY TRAFFIC CONTROL STRIPING OBLITERATED AND OR BADLY WORN DURING CONSTRUCTION SHALL BE RESTORED BY THE CONTRACTOR WITHIN FIVE DAYS AFTER NOTIFICATION FROM THE CITY INSPECTORS.
11. THE CONTRACTOR SHALL CALL IN A LOCATION REQUEST TO UNDERGROUND SERVICE ALERT (U.S.A.), PHONE No. 1-800-227-2600, TWO WORKING DAYS BEFORE DIGGING. NO CONSTRUCTION PERMIT WILL BE ISSUED BY THE PUBLIC WORKS DEPARTMENT INVOLVING EXCAVATION FOR UNDERGROUND FACILITIES UNLESS THE APPLICANT HAS BEEN PROVIDED AN INQUIRY IDENTIFICATION NUMBER BY U.S.A.
12. ALL CROSS SECTIONS ARE TAKEN LOOKING UPSTREAM.
13. CONTRACTOR TO VERIFY EXISTING STORM DRAIN ELEVATIONS PRIOR TO CONSTRUCTION.
14. PIPE BEDDING SHALL BE PER CITY OF RIVERSIDE STD. DWG. No. 452, CASE 1 UNLESS OTHERWISE NOTED.
15. THE STORM DRAIN CONTRACTOR SHALL ADJUST STORM DRAIN MANHOLES TO FINAL GRADE AFTER PAVING IS COMPLETED.
16. PIPE SECTIONS TO BE BEVELED AT ONE OR BOTH ENDS AS NEEDED TO MEET SYSTEM DESIGN PARAMETERS. SECTIONS BEVELED IN THIS MANNER NORMALY FIT TOGETHER ON A 90-, 45-, OR 22.5 FOOT RADIUS CURVE.

HOLD HARMLESS INDEMNIFICATION CLAUSE

THE CONTRACTOR AGREES THAT HE SHALL ASSUME SOLE AND COMPLETE RESPONSIBILITY FOR JOB SITE CONDITIONS DURING THE COURSE OF CONSTRUCTION OF THE PROJECT INCLUDING SAFETY OF ALL PERSONS AND PROPERTY; THAT THIS REQUIREMENT SHALL APPLY CONTINUOUSLY AND NOT BE LIMITED TO NORMAL WORKING HOURS; AND THAT THE CONTRACTOR SHALL DEFEND, INDEMNIFY, AND HOLD THE CITY OF RIVERSIDE, THE OWNER, AND THE PRIVATE ENGINEERS HARMLESS FOR ANY AND ALL LIABILITY; REAL OR ALLEGED, IN CONNECTION WITH PERFORMANCE OF WORK ON THIS PROJECT, EXCEPTING FOR LIABILITY ARISING FROM THE SOLE NEGLIGENCE OF THE OWNER OR THE ENGINEER.

EXISTING UNDERGROUND STRUCTURES

THE EXISTENCE AND LOCATION OF ANY UNDERGROUND UTILITY PIPE STRUCTURES OR CONDUITS SHOWN ON THESE PLANS ARE OBTAINED BY A SEARCH OF THE AVAILABLE RECORDS. TO THE BEST OF OUR KNOWLEDGE, THERE ARE NO EXISTING UTILITIES EXCEPT AS SHOWN ON THESE PLANS. IT SHALL BE THE CONTRACTOR'S RESPONSIBILITY TO NOTIFY THE OWNERS OF THE UTILITIES OR STRUCTURES CONCERNED BEFORE STARTING WORK. CONTRACTOR FURTHER ASSUMES ALL LIABILITY AND RESPONSIBILITY FOR THE UNDERGROUND UTILITY PIPES, CONDUITS OR STRUCTURES SHOWN OR NOT SHOWN ON THESE PLANS.

NOTICE TO CONTRACTOR

CONTRACTOR SHALL VERIFY ALL CONDITIONS AND DIMENSIONS AND SHALL REPORT ALL DISCREPANCIES TO THE ENGINEER PRIOR TO THE COMMENCEMENT OF WORK.

REVIEW BY:
WESTERN MUNICIPAL WATER DISTRICT
for Non-Interference Compliance

SHEET 1 THROUGH 5

CIVIL ENGINEER R.C.E. 46212
DATE: 1/3/00

CITY BUSINESS TAX CERTIFICATION NO. 033595 EXP. DATE 4/2/00

*AS-BUILT PER PLANS 10-03-03 GH
INDEXED 7-20-2000 GH

CHARTER COMMUNICATIONS	12-14-99	CITY OF RIVERSIDE OVERHEAD & UNDERGROUND	12-15-99
APPROVED BY	DATE	APPROVED BY	DATE
TELEPHONE	12-14-99	SOUTHERN CALIFORNIA GAS COMPANY	12-14-99
APPROVED BY	DATE	APPROVED BY	DATE

Underground Service Alert
Call: TOLL FREE 1-800 227-2600
TWO WORKING DAYS BEFORE YOU DIG

PRIVATE ENGINEERING NOTE

CONSTRUCTION CONTRACTOR AGREES THAT IN ACCORDANCE WITH GENERALLY ACCEPTED CONSTRUCTION PRACTICES, CONSTRUCTION CONTRACTOR WILL BE REQUIRED TO ASSUME SOLE AND COMPLETE RESPONSIBILITY FOR JOB SITE CONDITIONS DURING THE COURSE OF CONSTRUCTION OF THE PROJECT, INCLUDING SAFETY OF ALL PERSONS AND PROPERTY; THAT THIS REQUIREMENT SHALL BE MADE TO APPLY CONTINUOUSLY AND NOT BE LIMITED TO NORMAL WORKING HOURS, AND CONSTRUCTION CONTRACTOR FURTHER AGREES TO DEFEND, INDEMNIFY AND HOLD DESIGN PROFESSIONAL HARMLESS FROM ANY AND ALL LIABILITY, REAL OR ALLEGED, IN CONNECTION WITH THE PERFORMANCE OF WORK ON THIS PROJECT, EXCEPTING LIABILITY ARISING FROM THE SOLE NEGLIGENCE OF DESIGN PROFESSIONAL.

BENCHMARK

RIVERSIDE COUNTY BENCHMARK, STAMPED VB8-64 AT SOUTHWEST CORNER OF PLUMMER ROAD AND VAN BUREN BOULEVARD. 259.0 FEET SOUTH OF VAN BUREN BOULEVARD. 205.0 FEET WEST OF PLUMMER ROAD, ON THE TOP OF A 4.0 FOOT x 10.0 FOOT GRANITE BOULDER A BRASS DISK FLUSH AND MARKED.
ELEV. 1638.14

REGISTERED PROFESSIONAL ENGINEER
Civil
Ned J Araujo
No. 057835
Exp.6-30-02
STATE OF CALIFORNIA

The Keith Companies TKC
22690 Cactus Avenue, Suite 300 Moreno Valley, CA 92553-9024 (909) 653-0234

APPROVED BY: [signature]
DATE: 12/10/99
NED J. ARAUJO R.C.E. NO. 57835
REGISTRATION EXPIRES 06-30-02

MARK	REVISIONS:	APPR.	DATE
△1	ADDED SD SYSTEM-LINE "F", SHT 5A	RJZ	3/24/00

DESIGNED BY ____ DRAWN BY ____ CHECKED BY ____

CITY OF RIVERSIDE
PUBLIC WORKS DEPARTMENT

	DATE	BY
APPROVED BY		
PRINCIPAL ENGINEER	4/5/2000	[signature]
PARK DEPARTMENT		
TRAFFIC DIVISION		
P.W. ENGR. MANAGER	4/4/00	[signature]
STREET SERVICES	4/4/00	[signature]

R. McGrath
PUBLIC WORKS DIRECTOR
DATE 2-4-00

STORM DRAIN IMPROVEMENT PLANS
TRACT 28866-5 & -6
LINE "E"
TITLE SHEET

HORIZ. SCALE: AS SHOWN VERT. SCALE:

ACCOUNT NO. 31414.000
D-673
SHEET 1 OF 5

Plotted: 12/10/99 08:47:26 : N:\31414.000\dwg\storm_drain\LINE-E\Trsd-E1.dwg

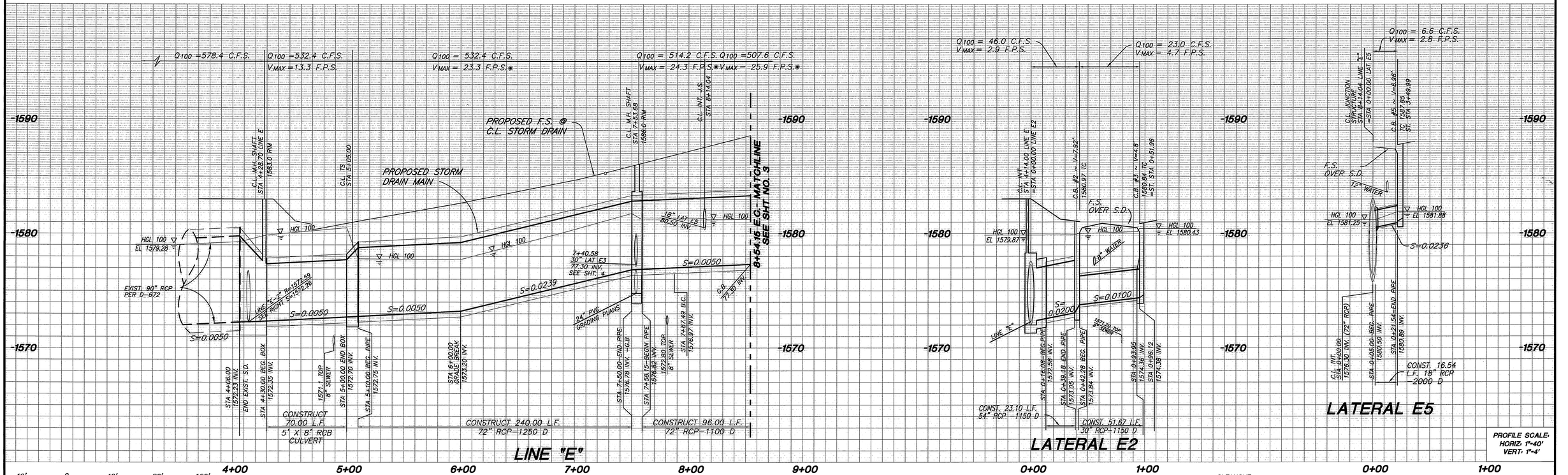

* SPECIAL PIPES

THE CONCRETE COVER ON THE INSIDE OF ALL REINFORCED CONCRETE PIPES MUST BE INCREASED TO PROVIDE A MINIMUM OF 1 1/2" OVER THE REINFORCING WHEN THE DESIGN VELOCITIES EXCEED 20 FEET PER SECOND. THE CONCRETE DESIGN STRENGTH IN THESE REACHES SHALL BE f'c=5,000 PSI FOR VELOCITIES EXCEEDING 20 FEET PER SECOND AND f'c=6,000 PSI FOR VELOCITIES EXCEEDING 30 FEET PER SECOND.

WARNING:
EXIST. SUBDRAIN PIPE IN GENERAL VICINITY. ADJUST EX. SUBDRAIN PIPE IF IT CONFLICTS WITH PROPOSED STORM DRAIN.

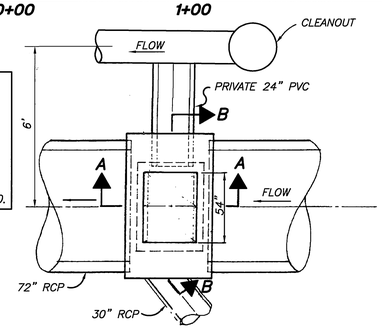

BLOW UP DETAIL
NOT TO SCALE

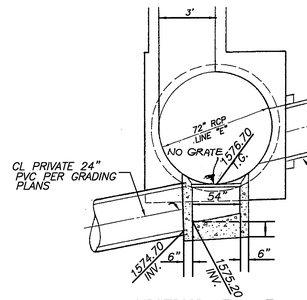

SECTION B – B
NOT TO SCALE

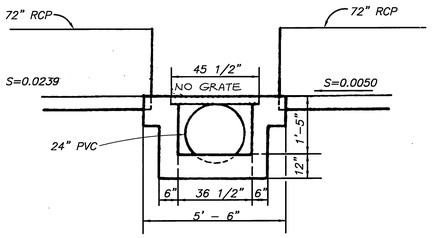

SECTION A – A
NOT TO SCALE

CONSTRUCTION NOTES

1. CONSTRUCT 18" RCP (D-LOAD PER PLAN)
3. CONSTRUCT 30" RCP (D-LOAD PER PLAN)
4. CONSTRUCT 72" RCP (D-LOAD PER PLAN)
5. CONSTRUCT CATCH BASIN PER CITY STD. 405 W & V PER PLAN
8. CONSTRUCT MANHOLE PER CITY STD. 432
10. CONSTRUCT JUNCTION STRUCTURE PER CITY STD. 423
11. CONSTRUCT TRANSITION STRUCTURE PER R.C.F.C. & W.C.D. STD. 301 (SEE SHEET NO.3)
12. CONSTRUCT 5' X 8' CAST-IN-PLACE REINFORCED CONCRETE SINGLE BOX CULVERT PER CALTRANS STD. D80. (SEE SHEET NO.3)
13. CONSTRUCT 54" RCP (D-LOAD PER PLAN)
14. CONSTRUCT CATCH BASIN OUTLET TRANSITION STRUCTURE PER CITY STD. 404

DATA

	DELTA/BEARING	RADIUS	LEN./DIST.	TANGENT
A	02°59'42"	508.00'	26.55'	13.28'
B	04°31'25"	508.00'	40.11'	20.06'

CITY OF RIVERSIDE JUNCTION STRUCTURE DATA TABLE

PLAN NO.	MAIN LINE	LATERAL LEFT NAME	LEFT A	LEFT B	LEFT C	LATERAL RIGHT NAME	RIGHT A	RIGHT B	C'	E'	L'	D_1	D_2
JS 4+14.00	LINE "E"					LAT E2	30°00'00"	54"	16.5'	12.8'	13.8'	5'X8' BOX	90"
MH @ 7+50	LINE "E"					LAT E3	45°47'49"	30"	8.4'	7.5'	8.5'	72"	72"
JS 8+14.00	LINE "E"					LAT E5	50°27'58"	18"	---	---	---	72"	72"

*AS-BUILT PER PLANS 10-03-03 LH

LINE "E" STORM DRAIN

Underground Service Alert
Call: TOLL FREE 1-800 227-2600
TWO WORKING DAYS BEFORE YOU DIG

PRIVATE ENGINEERING NOTE
CONSTRUCTION CONTRACTOR AGREES THAT IN ACCORDANCE WITH GENERALLY ACCEPTED CONSTRUCTION PRACTICES, CONSTRUCTION CONTRACTOR WILL BE REQUIRED TO ASSUME SOLE AND COMPLETE RESPONSIBILITY FOR JOB SITE CONDITIONS DURING THE COURSE OF CONSTRUCTION OF THE PROJECT, INCLUDING SAFETY OF ALL PERSONS AND PROPERTY; THAT THIS REQUIREMENT SHALL BE MADE TO APPLY CONTINUOUSLY AND NOT BE LIMITED TO NORMAL WORKING HOURS, AND CONSTRUCTION CONTRACTOR FURTHER AGREES TO DEFEND, INDEMNIFY AND HOLD DESIGN PROFESSIONAL HARMLESS FROM ANY AND ALL LIABILITY, REAL OR ALLEGED, IN CONNECTION WITH THE PERFORMANCE OF WORK ON THIS PROJECT, EXCEPTING LIABILITY ARISING FROM THE SOLE NEGLIGENCE OF DESIGN PROFESSIONAL.

BENCHMARK
RIVERSIDE COUNTY BENCHMARK, STAMPED VBB-64 AT SOUTHWEST CORNER OF PLUMMER ROAD AND VAN BUREN BOULEVARD. 259.0 FEET SOUTH OF VAN BUREN BOULEVARD. 205.0 FEET WEST OF PLUMMER ROAD, ON THE TOP OF A 4.0 FOOT x 10.0 FOOT GRANITE BOULDER A BRASS DISK FLUSH AND MARKED.
ELEV. 1638.14

REGISTERED PROFESSIONAL ENGINEER — Civil — Ned J Araujo — No. 057835 — Exp.6-30-02 — STATE OF CALIFORNIA

The Keith Companies TKC
22690 Cactus Avenue, Suite 300 Moreno Valley, CA 92553-9024 (909) 653-0234

APPROVED BY: [signature]
DATE: 11/7/00
NED J. ARAUJO R.C.E. NO. 57835
REGISTRATION EXPIRES 06-30-02

MARK	REVISIONS:	APPR.	DATE

DESIGNED BY _____ DRAWN BY _____ CHECKED BY _____

CITY OF RIVERSIDE
PUBLIC WORKS DEPARTMENT

	APPROVED BY	DATE	BY
	PRINCIPAL ENGINEER	2/2/2000	RE
	PARK DEPARTMENT		
	TRAFFIC DIVISION		
	CHEIF P.W. ENGINEER	1/4/00	TMS
	STREET SERVICES	1/14/00	lm

R. McGrath
PUBLIC WORKS DIRECTOR
DATE 2-4-00

STORM DRAIN IMPROVEMENT PLANS
TRACT 28866-5 & -6
LINE "E" STORM DRAIN
STA. 4+06.00 TO STA. 8+54.15
HORIZ. SCALE: 1"= 40' VERT. SCALE: 1"= 4'

ACCOUNT NO. 31414.000
D-673
SHEET 2 OF 5

INDEXED 7-20-2000 LH

Plotted: 01/17/00 10:44:59 - N:\31414.000\dwg\storm_drain\LINE-E\Prof-E2.dwg

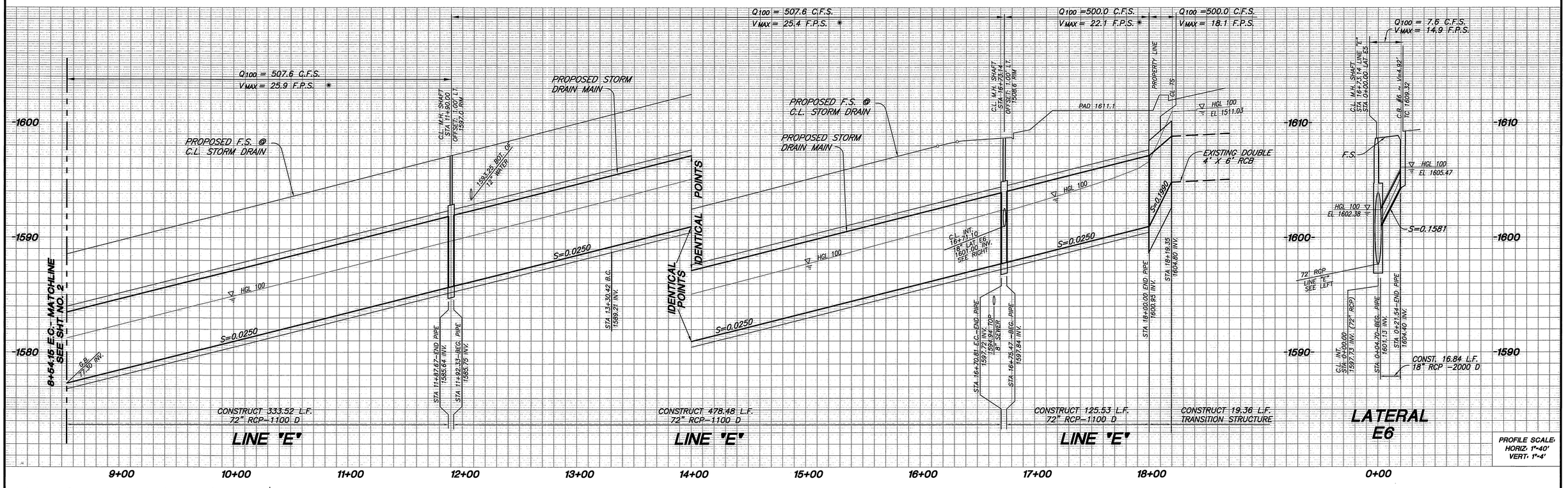

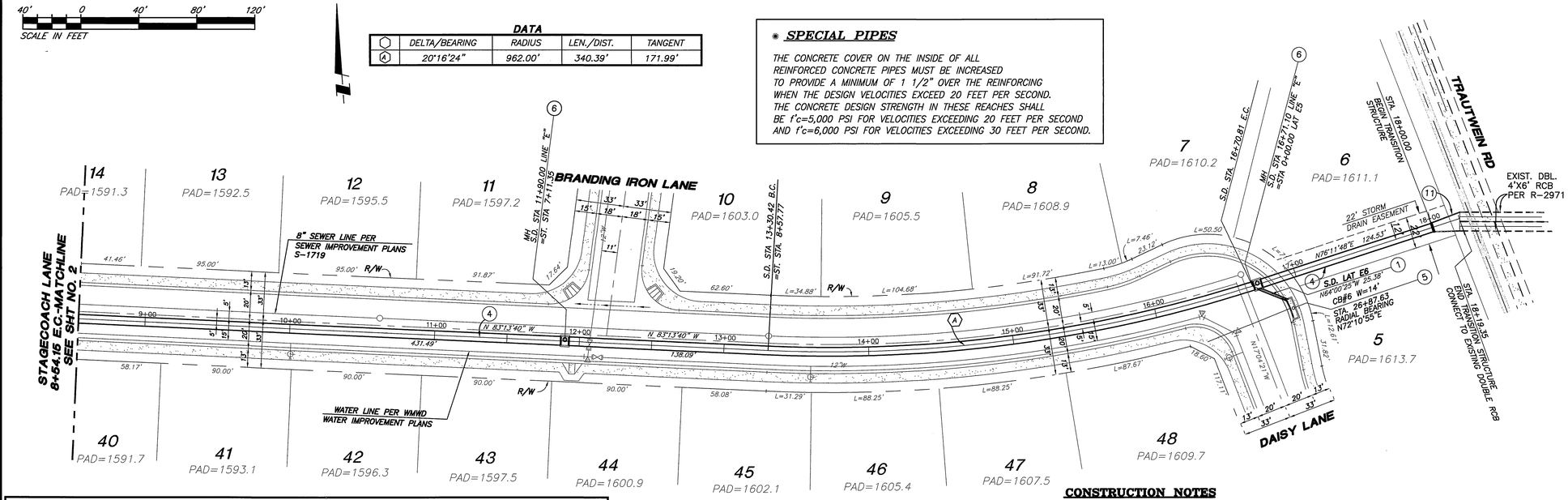

DATA

	DELTA/BEARING	RADIUS	LEN./DIST.	TANGENT
A	20°16'24"	962.00'	340.39'	171.99'

*** SPECIAL PIPES**

THE CONCRETE COVER ON THE INSIDE OF ALL REINFORCED CONCRETE PIPES MUST BE INCREASED TO PROVIDE A MINIMUM OF 1 1/2" OVER THE REINFORCING WHEN THE DESIGN VELOCITIES EXCEED 20 FEET PER SECOND. THE CONCRETE DESIGN STRENGTH IN THESE REACHES SHALL BE f'c=5,000 PSI FOR VELOCITIES EXCEEDING 20 FEET PER SECOND AND f'c=6,000 PSI FOR VELOCITIES EXCEEDING 30 FEET PER SECOND.

CITY OF RIVERSIDE JUNCTION STRUCTURE DATA TABLE

PLAN NO.	MAIN LINE	LATERAL LEFT NAME	A	B	C	LATERAL RIGHT NAME	A	B	C	D_1	D_2
M.H. @11+90.00	LINE "E"									72"	72"
M.H. @16+71.10	LINE "E"					LAT E5	39°24'51"	18"	---	72"	72"
T.S.	LINE "E"									72"	DBL 4'X6' BOX
---	---	---	---	---	---	---	---	---	---	---	---

STAGECOACH LANE
LINE "E"
STORM DRAIN

CONSTRUCTION NOTES

1. CONSTRUCT 18" RCP (D-LOAD PER PLAN)
4. CONSTRUCT 72" RCP (D-LOAD PER PLAN)
5. CONSTRUCT CATCH BASIN PER CITY STD. 405 W & V PER PLAN
6. CONSTRUCT MANHOLE AX PER CITY STD. 430
11. CONSTRUCT TRANSITION STRUCTURE NO. 1 PER R.C.F.C. & W.C.D. STD. TS 301

* AS-BUILT PER PLANS 10-03-03 4H

CALL BEFORE YOU DIG — Underground Service Alert — Call: TOLL FREE 1-800 227-2600 — TWO WORKING DAYS BEFORE YOU DIG

PRIVATE ENGINEERING NOTE

CONSTRUCTION CONTRACTOR AGREES THAT IN ACCORDANCE WITH GENERALLY ACCEPTED CONSTRUCTION PRACTICES, CONSTRUCTION CONTRACTOR WILL BE REQUIRED TO ASSUME SOLE AND COMPLETE RESPONSIBILITY FOR JOB SITE CONDITIONS DURING THE COURSE OF CONSTRUCTION OF THE PROJECT, INCLUDING SAFETY OF ALL PERSONS AND PROPERTY; THAT THIS REQUIREMENT SHALL BE MADE TO APPLY CONTINUOUSLY AND NOT BE LIMITED TO NORMAL WORKING HOURS, AND CONSTRUCTION CONTRACTOR FURTHER AGREES TO DEFEND, INDEMNIFY AND HOLD DESIGN PROFESSIONAL HARMLESS FROM ANY AND ALL LIABILITY, REAL OR ALLEGED, IN CONNECTION WITH THE PERFORMANCE OF WORK ON THIS PROJECT, EXCEPTING LIABILITY ARISING FROM THE SOLE NEGLIGENCE OF DESIGN PROFESSIONAL.

BENCHMARK

RIVERSIDE COUNTY BENCHMARK, STAMPED VSB-64 AT SOUTHWEST CORNER OF PLUMMER ROAD AND VAN BUREN BOULEVARD. 259.0 FEET SOUTH OF VAN BUREN BOULEVARD, 205.0 FEET WEST OF PLUMMER ROAD, ON THE TOP OF A 4.0 FOOT x 10.0 FOOT GRANITE BOULDER A BRASS DISK FLUSH AND MARKED.
ELEV. 1638.14

REGISTERED PROFESSIONAL ENGINEER — Civil — Ned J Araujo No. 057835 Exp.6-30-02 — STATE OF CALIFORNIA

The Keith Companies | TKC
22690 Cactus Avenue, Suite 300 Moreno Valley, CA 92553-9024 (909) 653-0234

APPROVED BY: _____
DATE: 1/17/00

NED J. ARAUJO R.C.E. NO. 57835
REGISTRATION EXPIRES 06-30-02

MARK	REVISIONS:	APPR.	DATE

DESIGNED BY _____ DRAWN BY _____ CHECKED BY _____

CITY OF RIVERSIDE
PUBLIC WORKS DEPARTMENT

	DATE	BY
APPROVED BY		
PRINCIPAL ENGINEER	2/3/2000	
PARK DEPARTMENT		
TRAFFIC DIVISION		
CHEIF P.W. ENGINEER	2/4/00	
STREET SERVICES	1/19/00	

R. McGrath
PUBLIC WORKS DIRECTOR
DATE 2-4-00

STORM DRAIN IMPROVEMENT PLANS
TRACT 28866-6
LINE "E" STORM DRAIN
STA. 8+54.15 TO STA. 18+19.35
HORIZ. SCALE: 1"= 40' VERT. SCALE: 1"= 4'

ACCOUNT NO. 31414.000

D-673

SHEET 3 OF 5

INDEXED 7-20-2000 4H

Plotted: 01/17/00 10:48:27 | N:\31414.000\dwg\storm_drain\LINE-E\Prpsd-E3.dwg

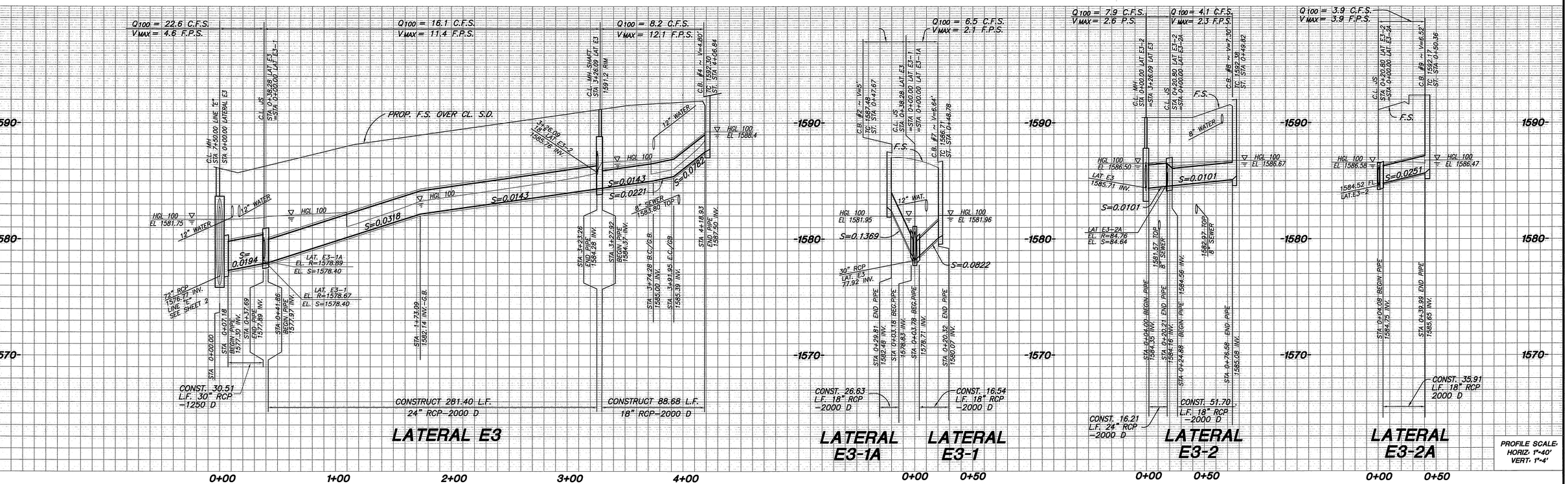

LATERAL "E3"

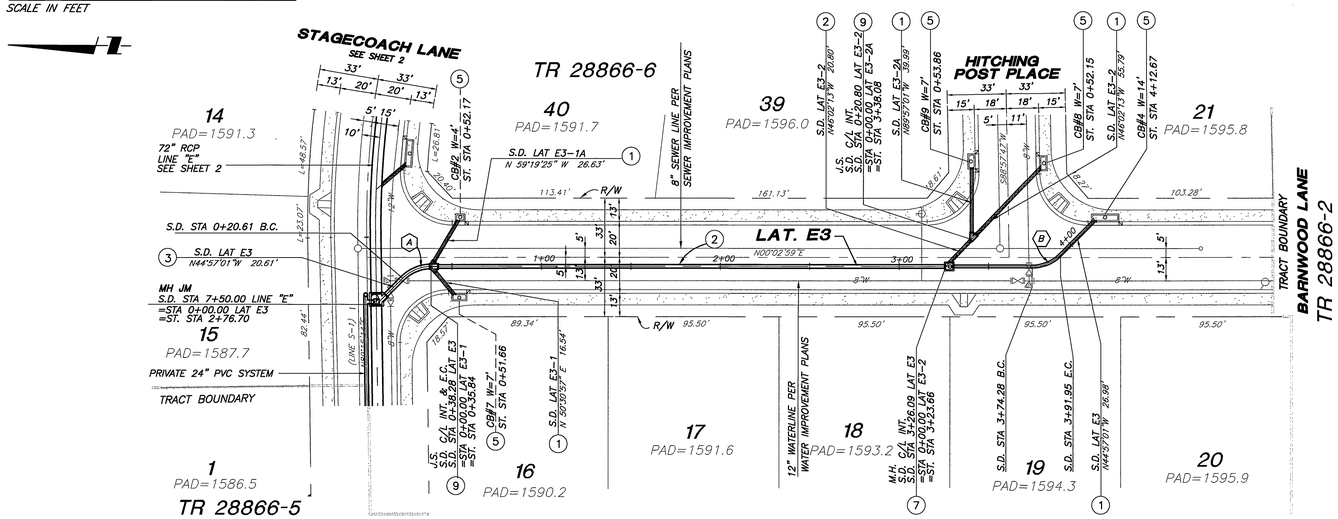

40' 0 40' 80' 120'
SCALE IN FEET

CITY OF RIVERSIDE JUNCTION STRUCTURE DATA TABLE

PLAN NO.	MAIN LINE	LATERAL LEFT NAME	A	B	C'	E'	L'	D_1	D_2	LATERAL RIGHT NAME	A	B	C'	E'	L'	D_1	D_2
J.S. @0+38.28	LINE "E3"	LINE "E3-1A"	59°19'25"	18"	3.6'	3.3'	4.3'	24"	30"	LAT E3-1	50°30'57"	18"	4.2'	4.0'	5.0'	24"	30"
M.H. @3+26.09	LINE "E3"	LAT E3-2	46°05'12"	18"													
J.S. @0+20.80	LINE "E3-2"	LAT E3-2A	43°54'48"	18"	4.5'	4.5'	5.5'										

DATA

	DELTA/BEARING	RADIUS	LEN./DIST.	TANGENT
A	45°00'00"	22.50'	17.67'	9.32'
B	45°00'00"	22.50'	17.67'	9.32'

CONSTRUCTION NOTES

1. CONSTRUCT 18" RCP – 2000 D
2. CONSTRUCT 24" RCP – 2000 D
3. CONSTRUCT 30" RCP (D-LOAD PER PLAN)
5. CONSTRUCT CATCH BASIN PER CITY STD. 405 W & V PER PLAN
7. CONSTRUCT MANHOLE EZ PER CITY STD. 431
9. CONSTRUCT JUNCTION STRUCTURE C PER CITY STD. 422

*AS-BUILT PER PLANS 10-03-03 GH

Underground Service Alert
Call: TOLL FREE
1-800 227-2600
TWO WORKING DAYS BEFORE YOU DIG

PRIVATE ENGINEERING NOTE

CONSTRUCTION CONTRACTOR AGREES THAT IN ACCORDANCE WITH GENERALLY ACCEPTED CONSTRUCTION PRACTICES, CONSTRUCTION CONTRACTOR WILL BE REQUIRED TO ASSUME SOLE AND COMPLETE RESPONSIBILITY FOR JOB SITE CONDITIONS DURING THE COURSE OF CONSTRUCTION OF THE PROJECT, INCLUDING SAFETY OF ALL PERSONS AND PROPERTY; THAT THIS REQUIREMENT SHALL BE MADE TO APPLY CONTINUOUSLY AND NOT BE LIMITED TO NORMAL WORKING HOURS, AND CONSTRUCTION CONTRACTOR FURTHER AGREES TO DEFEND, INDEMNIFY AND HOLD DESIGN PROFESSIONAL HARMLESS FROM ANY AND ALL LIABILITY, REAL OR ALLEGED, IN CONNECTION WITH THE PERFORMANCE OF WORK ON THIS PROJECT, EXCEPTING LIABILITY ARISING FROM THE SOLE NEGLIGENCE OF DESIGN PROFESSIONAL.

BENCHMARK

RIVERSIDE COUNTY BENCHMARK, STAMPED VSB-64 AT SOUTHWEST CORNER OF PLUMMER ROAD AND VAN BUREN BOULEVARD, 250.0 FEET SOUTH OF VAN BUREN BOULEVARD, 205.0 FEET WEST OF PLUMMER ROAD, ON THE TOP OF A 4.0 FOOT x 10.0 FOOT GRANITE BOULDER A BRASS DISK FLUSH AND MARKED.
ELEV. 1638.14

REGISTERED PROFESSIONAL ENGINEER
Civil
Ned J Araujo
No. 057835
Exp.6-30-02
STATE OF CALIFORNIA

The Keith Companies TKC
22690 Cactus Avenue, Suite 300 Moreno Valley, CA 92553-9024 (909) 653-0234

APPROVED BY: [signature]
DATE: 1/17/00
NED J. ARAUJO R.C.E. NO. 57835
REGISTRATION EXPIRES 06-30-02

MARK	REVISIONS:	APPR.	DATE

DESIGNED BY _____ DRAWN BY _____ CHECKED BY _____

CITY OF RIVERSIDE
PUBLIC WORKS DEPARTMENT

APPROVED BY	DATE	BY
PRINCIPAL ENGINEER	2/1/2000	[illegible]
PARK DEPARTMENT		
TRAFFIC DIVISION		
CHEIF P.W. ENGINEER	2/14/00	DCB
STREET SERVICES	1/19/00	[illegible]

PARK DEPARTMENT
R. McGrath
PUBLIC WORKS DIRECTOR
DATE 2-4-00

STORM DRAIN IMPROVEMENT PLANS
TRACT 28866-5 & -6
STORM DRAIN
LATERAL E3, E3-1, E3-2, & E3-2A
HORIZ. SCALE: 1"= 40' VERT. SCALE: 1"= 4'

ACCOUNT NO. 31414.000
D-673
SHEET 4 OF 5

INDEXED 7-20-2000 GH

Plotted: 01/17/00 13:09:51 - W:\31414.000\dwg\storm_drain\LINE-E\Plan-E4.dwg

SPAN (Ft)	4						5								6								7										8									
HEIGHT (Ft)	2		3		4		2		3		4		5		3		4		5		6		3		4		5		6		7		4		5		6		7		8	
Maximum Earth Cover (Ft)	10	20	10	20	10	20	10	20	10	20	10	20	10	20	10	20	10	20	10	20	10	20	10	20	10	20	10	20	10	20	10	20	10	20	10	20	10	20	10	20	10	20
Conc — Roof T_1 (Inch)	7	7	7	7	7	7	7½	7½	7½	7½	7½	7½	7½	7½	8	8	8	8	8	8	8	8	8	9	8	9	8	9	8½	9	8½	9	8½	9½	8½	9½	8½	10	8½	10	8½	10
Conc — Walls T_2 (Inch)	6	6	6	6	6	6½	6	6	6	6	6	7	6½	7½	6	6	6	7	6½	7½	7	8½	6	6	6	7	6½	7½	7	8½	8	9½	6	7	6½	7½	7	8½	8	9½	8½	10½
Conc — Invert T_3 (Inch)	6	6	6	6	6	6½	6½	7	6½	7	6½	7	6½	7	7	8	7	8	7	8	7	8	8	9	8	9	8	9	8	9	8	9	8	9½	8	10	8	10	8	10	8	10
Reinf — Spacing (Inch)	7	7	7	7	7	7	8½	6	8½	5½	8½	5½	8½	5½	7½	5	7½	5	7½	5	7½	4½	6½	5	6½	4½	6½	5½	6½	5½	6½	5½	6	5	6	5	6	4½	6	5	6	4½
Reinf — "a" Size Bar *	6	6	6	6	6	6	7	6	7	6	7	6	7	6	7	6	7	6	7	6	7	6	7	6	7	6	7	7	7	7	7	7	7	7	7	7	7	7	7	7	7	7
Reinf — "e" Size Bar *	4	4	4	5	5	6	4	4	4	4	5	5	6	6	4	4	5	5	6	6	7	6	4	4	5	5	6	6	6	7	7	7	5	5	5	6	6	6	6	7	7	7
Quantities — Concrete CF/LF	7.4	7.4	8.4	8.4	9.4	10.1	8.9	9.2	10.0	10.2	11.0	12.0	12.5	13.7	11.7	12.3	12.7	14.2	14.2	15.9	15.9	18.3	13.7	14.9	14.6	16.8	16.1	18.5	18.1	21.0	20.7	23.8	16.4	19.0	17.9	21.1	19.5	24.1	22.1	26.9	24.1	30.1
Quantities — Reinforcement LB/LF	48	48	50	55	58	67	58	60	58	68	67	81	82	105	70	81	82	96	97	120	124	148	94	94	105	118	121	147	130	177	160	192	123	151	131	171	137	198	160	215	192	252

SPAN (Ft)	10												12														14															
HEIGHT (Ft)	5		6		7		8		9		10		6		7		8		9		10		11		12		7		8		9		10		11		12		13		14	
Maximum Earth Cover (Ft)	10	20	10	20	10	20	10	20	10	20	10	20	10	20	10	20	10	20	10	20	10	20	10	20	10	20	10	20	10	20	10	20	10	20	10	20	10	20	10	20	10	20
Conc — Roof T_1 (Inch)	8	10½	8	10½	8	10½	8	10½	8	10½	8½	11	8½	12	8½	12	8½	12	8½	12	8½	12	9½	12	9½	12	9½	14	9½	14	9½	14	9½	14	10	14	10	14	10½	14	11	14
Conc — Walls T_2 (Inch)	8	8	8	9	8	9	8	10	8½	11½	9½	12½	8	10	8½	10½	8½	10½	8½	11½	9	12½	10½	13½	11½	15	9½	11	9½	11½	9½	11½	10	12½	10½	14	11½	15	12½	16½	13½	17½
Conc — Invert T_3 (Inch)	8	11	8	11	8	11	8	11	8	11	8½	11	8½	12½	9	12½	9	12½	9	12½	9	12½	9½	13	10	13	10	14½	10	14½	10	14½	10	14½	10½	14½	10½	15	11	15	11½	15
Reinforcement — Spacing (Inch)	13	12	12	12	11	11	10	11	11	10	11	10	9	10	9	10	9	10	8	10	8	10	10	9	9	8	10	9	10	9	10	8	10	8	10	8	8	10	10	10	10	9
Reinforcement — **"a" Size Bar *	6	7	6	7	6	7	6	7	6	6	6	6	6	7	6	7	6	7	6	7	6	7	6	6	6	6	7	7	7	7	7	7	7	7	7	7	6	7	6	7	6	7
Reinforcement — "b" Size Bar *	6	7	6	7	6	7	6	7	6	6	7	7	6	7	6	7	6	7	6	7	6	7	7	7	6	7	6	7	7	7	7	7	7	7	7	7	6	8	7	8	7	8
Reinforcement — "b" Dimension "B" (Ft-Inch)	2-11	2-11	2-11	3-0	2-11	3-9	2-11	3-9	2-11	3-9	2-11	3-9	3-1	3-2	3-9	3-9	3-9	3-9	3-7	3-9	3-7	4-4	3-7	4-4	4-4	4-4	2-9	4-2	3-4	4-4	3-4	4-6	3-4	4-6	3-6	4-6	3-6	4-6	3-6	4-6	4-9	6-0
Reinforcement — "b" Dimension "B_w" (Ft-Inch)	4-10	5-0	4-10	5-0	4-10	5-0	4-10	5-0	4-10	5-0	4-7	4-7	6-0	5-10	6-2	6-7	6-2	6-7	4-11	4-11	4-11	4-11	4-11	4-11	4-4	4-4	6-5	7-0	7-0	8-4	7-0	8-4	6-0	6-0	6-0	6-0	6-0	6-0	5-0	6-0	4-6	6-0
Reinforcement — "c" Size Bar *	6	7	6	7	6	7	6	7	7	7	7	7	6	7	6	7	6	7	6	7	6	7	7	7	7	7	7	7	7	7	7	7	7	7	7	7	7	8	8	8	8	8
Reinforcement — "c" Dimension "C" (Ft-Inch)	3-4	3-4	7-4	4-8	7-7	4-8	8-2	4-8	7-7	4-8	7-7	4-8	4-4	3-7	8-1	5-7	8-1	5-7	8-1	5-7	8-1	5-7	8-1	5-7	8-1	5-7	4-0	4-2	6-9	6-9	5-10	5-10	6-0	6-4	8-11	6-4	8-11	6-4	8-11	6-4	8-11	6-4
Reinforcement — *"e" Size Bar *	4	4	4	4	4	4	4	4	4	4	5	5	4	4	4	4	4	4	4	4	4	4	5	5	5	5	4	4	4	4	4	4	4	4	4	4	4	5	6	6	6	6
Quantities — Concrete CF/LF	21.6	26.8	23.0	29.5	24.3	31.0	25.6	34.1	27.8	37.7	32.1	42.3	26.8	37.7	29.3	40.1	30.3	41.9	32.2	45.4	34.5	49.8	40.7	54.2	45.4	59.9	36.2	51.0	37.8	53.1	39.5	54.9	41.9	58.7	45.9	64.1	49.9	69.5	55.6	75.8	61.6	81.3
Quantities — Reinforcement LB/LF	191	267	233	285	260	325	300	339	314	327	360	373	295	362	353	409	365	420	402	413	415	424	440	471	468	534	374	471	449	522	446	587	449	580	492	596	537	605	564	634	604	759

- * See Note 5
- ** See Note 6

DIST	COUNTY	ROUTE	POST MILES TOTAL PROJECT	SHEET NO.	TOTAL SHEETS

REGISTERED CIVIL ENGINEER

July 1, 1992

PLANS APPROVAL DATE

REGISTERED PROFESSIONAL ENGINEER T. Pollock No. 13332 Exp. 3-31-93 CIVIL STATE OF CALIFORNIA

"d" bars, for earth covers up to and including 10'								
Span	4'	5'	6'	7'	8'	10'	12'	14'
Number	5	6	7	8	9	10	12	16

72

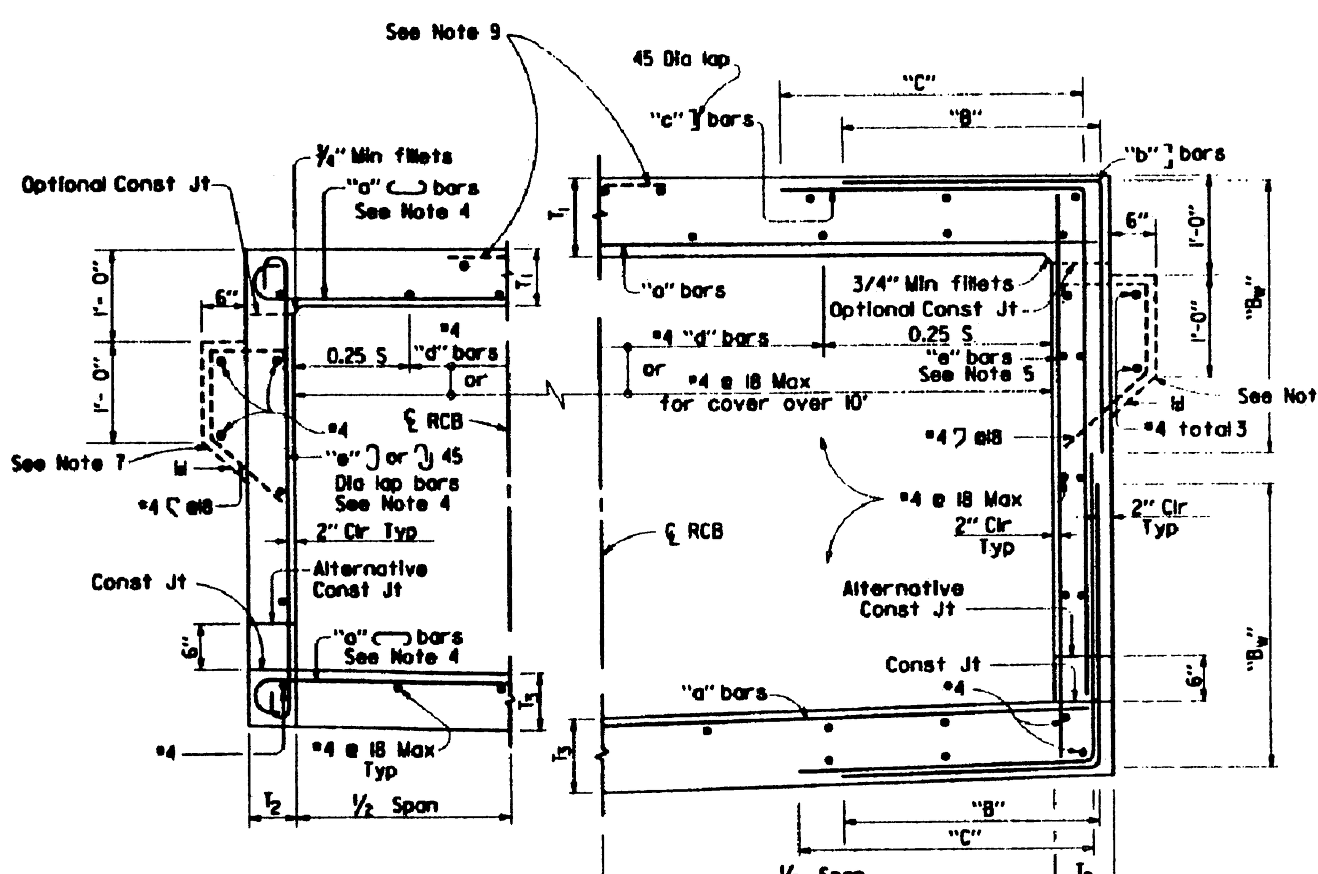

TYPICAL SECTION - SPANS 4' THRU 8'

TYPICAL SECTION - SPANS 10' THRU 14'

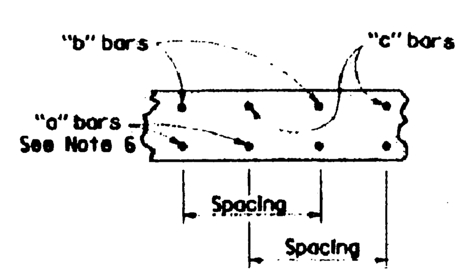

ROOF SECTION SPANS 10' THRU 14'

INVERT SIMILAR

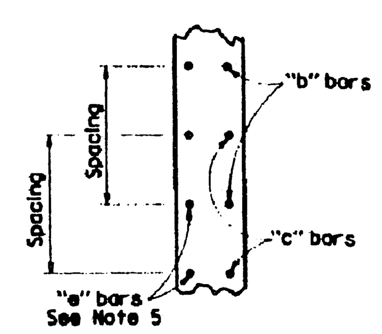

WALL SECTION SPANS 10' THRU 14'

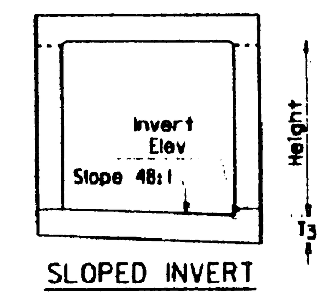

SLOPED INVERT

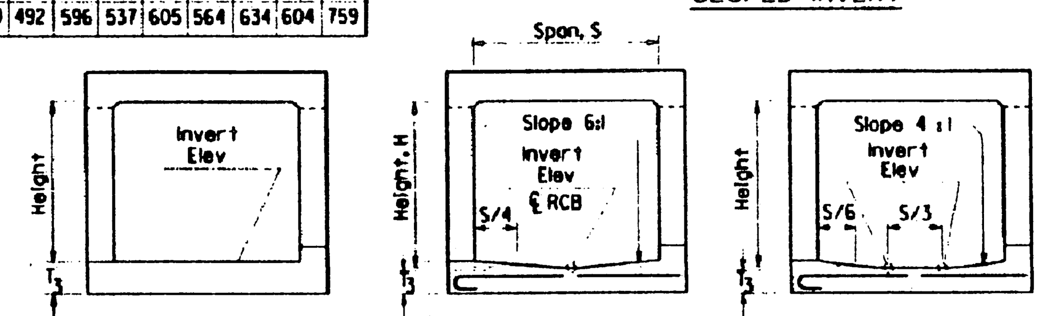

FLAT INVERT V INVERT TRAPEZOIDAL INVERT

ALTERNATIVE INVERTS

STD. PLAN D80

NOTES

1. For boxes with span or height less than any of those shown in table, use next greater size box concrete dimensions and reinforcement. Make necessary changes in bar lengths and quantities.
2. Quantities are approximate and for design purposes only.
3. For boxes with span or height or cover greater than those shown in tables, a special design is required.
4. It is permissable to eliminate the 180° hooks on every other bar.
5. "e" bars are at half spacing (spans 10'-14' only).
6. "a" bars are at half spacing (spans 10'-14' only).
7. Provide paving notch when top is exposed and when pavement is portland cement concrete, and adjust quantities.
8. For design and details not shown, see Standard Plan D82.
9. For exposed top, provide #4 @ 18 each way (2' lap "c" bars or full span) and adjust.

STATE OF CALIFORNIA
DEPARTMENT OF TRANSPORTATION

CAST-IN-PLACE REINFORCED CONCRETE SINGLE BOX CULVERT

NO SCALE

D80

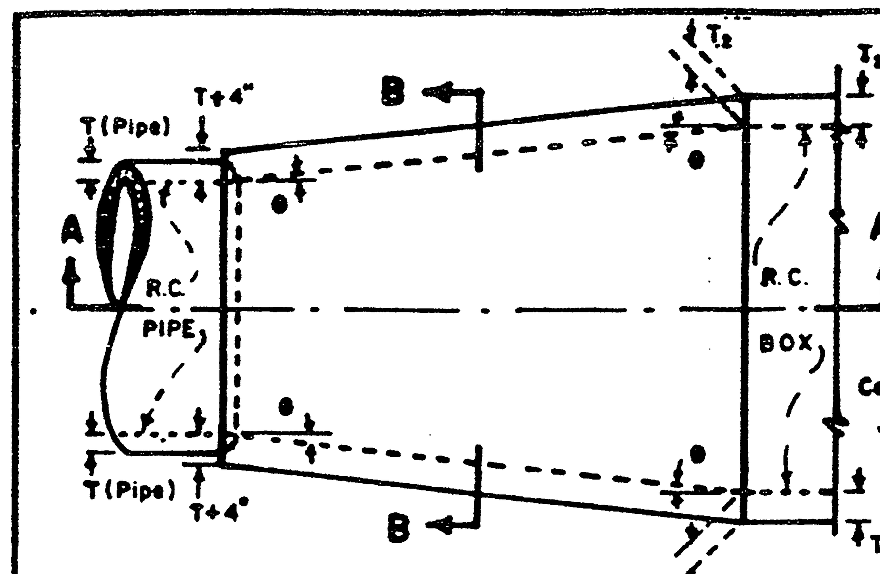

PLAN

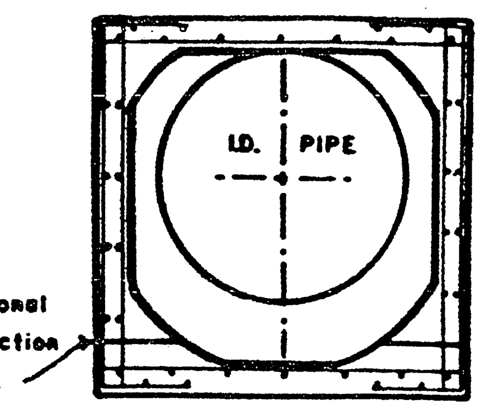

SECTION B-B

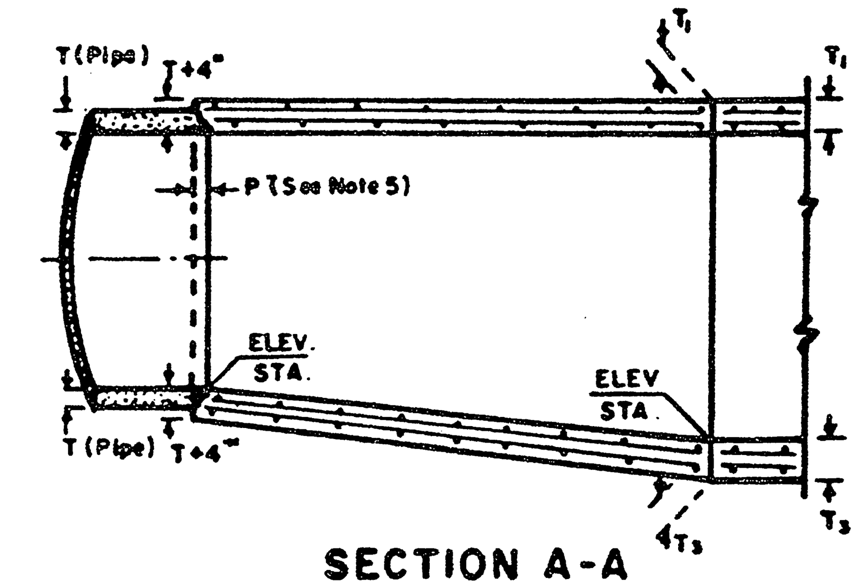

SECTION A-A

NOTES

1. The horizontal angle of divergence or convergence, θ, shall not exceed 5° 45'.
2. Reinforcing steel bar sizes, spacing, pattern and cover over the steel shall be that of the box section. The bar lengths shall vary uniformly throughout the transition.
3. The concrete thickness shall be that of the box section unless the wall thickness of the pipe plus 4 inches is greater, in which case the concrete thickness shall vary uniformly from that of the box section to that of the pipe wall plus 4 inches.
4. The interior surface shall be smooth and vary uniformly between the two adjoining sections.
5. At pipe juncture, embedment P shall be 5 inches for pipe sizes of 96 inches or less and 8 inches for pipe over 96 inches.
6. Construction joints of the same dimensions as those of the box may be carried through the transition structure at contractor's option. See Sec. B-B above.
7. The transition structure shall be constructed in accordance with the general structural notes applying to box as shown on the project drawings.
8. Structural concrete shall be Class "A".

L.A.C.F.C.D. STD. No. 2-D235

REVISIONS | REF | DESCRIPTION | APPR DATE

RIVERSIDE COUNTY FLOOD CONTROL AND WATER CONSERVATION DISTRICT

DESIGNED BY / DESIGN BY / DATE DRAWN / CHECKED BY

APPROVED BY John W. Bryant, CHIEF ENGINEER R.E. No. 8622, DATE 6-1-71

TRANSITION STRUCTURE NO. 1

STANDARD DRAWING NUMBER TS301

PROJECT NO / DRAWING NO / SHEET NO OF

*AS-BUILT PER PLANS 10-03-03 4H

Underground Service Alert
Call: TOLL FREE
1-800
227-2600
TWO WORKING DAYS BEFORE YOU DIG

PRIVATE ENGINEERING NOTE

CONSTRUCTION CONTRACTOR AGREES THAT IN ACCORDANCE WITH GENERALLY ACCEPTED CONSTRUCTION PRACTICES, CONSTRUCTION CONTRACTOR WILL BE REQUIRED TO ASSUME SOLE AND COMPLETE RESPONSIBILITY FOR JOB SITE CONDITIONS DURING THE COURSE OF CONSTRUCTION OF THE PROJECT, INCLUDING SAFETY OF ALL PERSONS AND PROPERTY; THAT THIS REQUIREMENT SHALL BE MADE TO APPLY CONTINUOUSLY AND NOT BE LIMITED TO NORMAL WORKING HOURS, AND CONSTRUCTION CONTRACTOR FURTHER AGREES TO DEFEND, INDEMNIFY AND HOLD DESIGN PROFESSIONAL HARMLESS FROM ANY AND ALL LIABILITY, REAL OR ALLEGED, IN CONNECTION WITH THE PERFORMANCE OF WORK ON THIS PROJECT, EXCEPTING LIABILITY ARISING FROM THE SOLE NEGLIGENCE OF DESIGN PROFESSIONAL.

BENCHMARK

RIVERSIDE COUNTY BENCHMARK, STAMPED VB8-64 AT SOUTHWEST CORNER OF PLUMMER ROAD AND VAN BUREN BOULEVARD. 259.0 FEET SOUTH OF VAN BUREN BOULEVARD. 205.0 FEET WEST OF PLUMMER ROAD, ON THE TOP OF A 4.0 FOOT x 10.0 FOOT GRANITE BOULDER A BRASS DISK FLUSH AND MARKED.
ELEV. 1638.14

REGISTERED PROFESSIONAL ENGINEER — Civil — Ned J Araujo — No. 057835 — Exp.6-30-02 — STATE OF CALIFORNIA

The Keith Companies TKC
22690 Cactus Avenue, Suite 300 Moreno Valley, CA 92553-9024 (909) 653-0234

APPROVED BY:
DATE: 1/17/00
NED J. ARAUJO R.C.E. NO. 57835
REGISTRATION EXPIRES 06-30-02

MARK	REVISIONS:	APPR.	DATE

DESIGNED BY ______ DRAWN BY ______ CHECKED BY ______

CITY OF RIVERSIDE
PUBLIC WORKS DEPARTMENT

APPROVED BY	DATE	BY
PRINCIPAL ENGINEER	2/3/2000	
PARK DEPARTMENT	—	—
TRAFFIC DIVISION	—	—
CHEIF P.W. ENGINEER	2/4/00	TRS
STREET SERVICES	1/18/00	

~~PARK DEPARTMENT~~

R. McGrath
PUBLIC WORKS DIRECTOR
DATE 2-4-00

STORM DRAIN IMPROVEMENT PLANS
TRACT 28866-5 & -6
STORM DRAIN
DETAILS

HORIZ. SCALE: 1"= 40' VERT. SCALE: 1"= 4'

ACCOUNT NO. 31414.000

D-673

SHEET 5 OF 5

Plotted: 01/17/00 10:52:20 · N:\31414.000\dwg\storm_drain\LINE-E\Prsd-DETAL.dwg

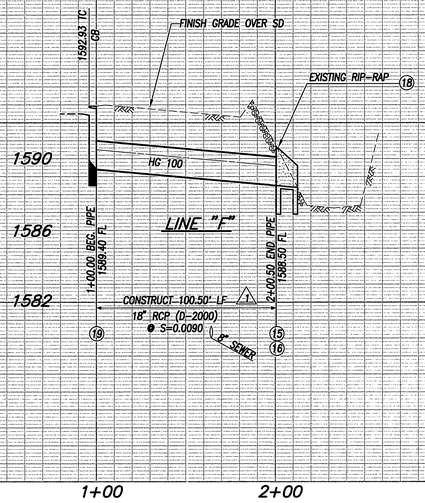

PROFILE SCALE:
HORIZ: 1"=40'
VERT: 1"=4'

HYDROLOGIC DATA

Q	n	dn	Vn	dcr	Vcr
9.00 cfs	0.013	1.1	6.4	1.2	6.1

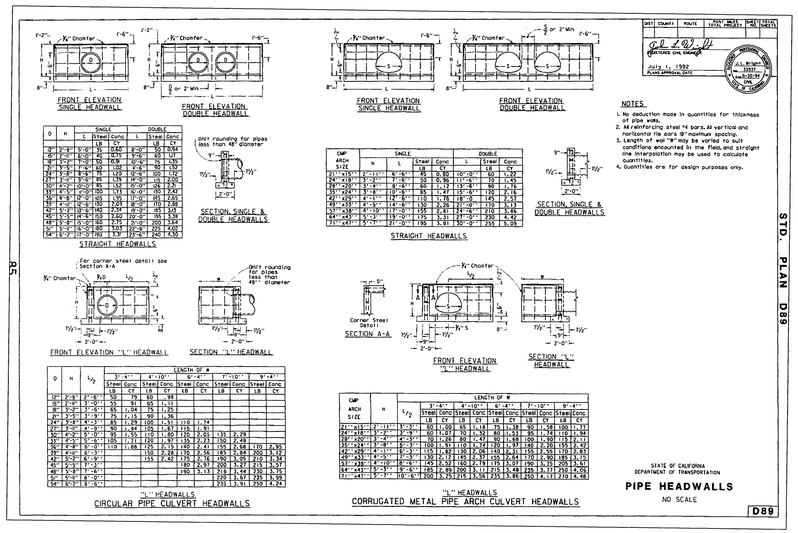

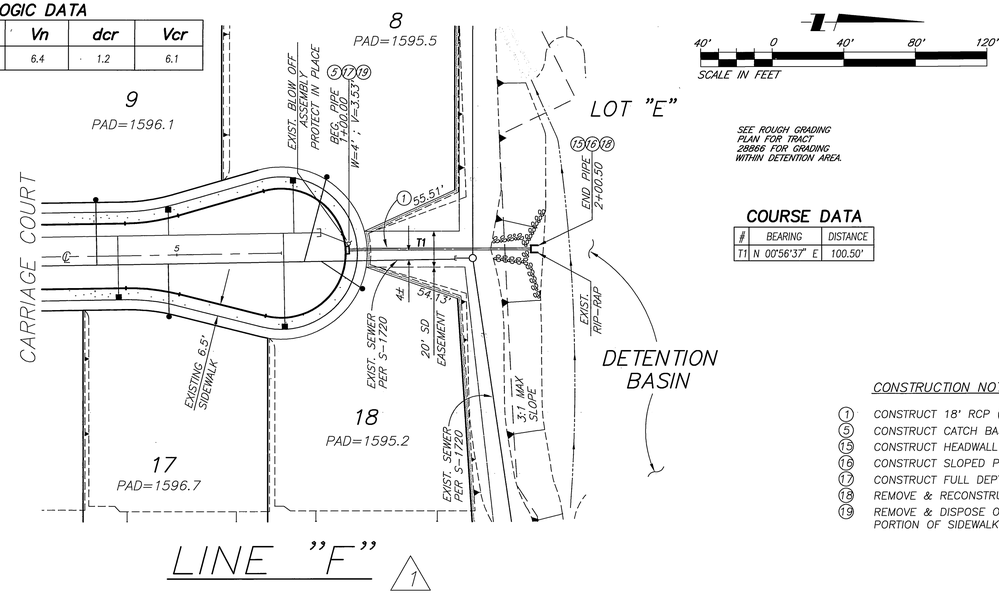

COURSE DATA

#	BEARING	DISTANCE
T1	N 00°56'37" E	100.50'

CONSTRUCTION NOTES:

1. CONSTRUCT 18' RCP (D-LOAD PER PLAN)
5. CONSTRUCT CATCH BASIN PER CITY STD. 405 (W & V PER PLAN)
15. CONSTRUCT HEADWALL PER CALTRANS STD. D89
16. CONSTRUCT SLOPED PROTECTION BARRIER PER APWA STD. 360-0
17. CONSTRUCT FULL DEPTH A.C. PAVING
18. REMOVE & RECONSTRUCT RIP-RAP AS NECESSARY
19. REMOVE & DISPOSE OF EXISTING UNDERSIDEWALK DRAIN 8" PIPE, PORTION OF SIDEWALK, CURB/GUTTER, REPLACE SIDEWALK AS NECESSARY

CITY BUSINESS TAX CERTIFICATION NO: 104442 EXP. DATE: 05/25/02
ENGINEER OF RECORD AS OF APRIL 1, 2001 TREVOR S. DODSON R.C.E. NO.42029

*AS-BUILT PER PLANS 10-03-03 JH

Underground Service Alert
Call: TOLL FREE
1-800
227-2600
TWO WORKING DAYS BEFORE YOU DIG

PRIVATE ENGINEERING NOTE

CONSTRUCTION CONTRACTOR AGREES THAT IN ACCORDANCE WITH GENERALLY ACCEPTED CONSTRUCTION PRACTICES, CONSTRUCTION CONTRACTOR WILL BE REQUIRED TO ASSUME SOLE AND COMPLETE RESPONSIBILITY FOR JOB SITE CONDITIONS DURING THE COURSE OF CONSTRUCTION OF THE PROJECT, INCLUDING SAFETY OF ALL PERSONS AND PROPERTY; THAT THIS REQUIREMENT SHALL BE MADE TO APPLY CONTINUOUSLY AND NOT BE LIMITED TO NORMAL WORKING HOURS, AND CONSTRUCTION CONTRACTOR FURTHER AGREES TO DEFEND, INDEMNIFY AND HOLD DESIGN PROFESSIONAL HARMLESS FROM ANY AND ALL LIABILITY, REAL OR ALLEGED, IN CONNECTION WITH THE PERFORMANCE OF WORK ON THIS PROJECT, EXCEPTING LIABILITY ARISING FROM THE SOLE NEGLIGENCE OF DESIGN PROFESSIONAL.

BENCHMARK

RIVERSIDE COUNTY BENCHMARK, STAMPED VBB-64 AT SOUTHWEST CORNER OF PLUMMER ROAD AND VAN BUREN BOULEVARD. 259.0 FEET SOUTH OF VAN BUREN BOULEVARD, 205.0 FEET WEST OF PLUMMER ROAD, ON THE TOP OF A 4.0 FOOT x 10.0 FOOT GRANITE BOULDER A BRASS DISK FLUSH AND MARKED.
ELEV. 1638.123

REGISTERED PROFESSIONAL ENGINEER TREVOR S. DODSON No. 42029 Exp. 3-31-2004 CIVIL STATE OF CALIFORNIA

MDS CONSULTING
PLANNERS ENGINEERS SURVEYORS
MORSE DOKICH SCHULTZ
17320 Redhill Ave. Suite 350 Irvine, CA 92614
Voice: 949-251-8821 FAX: 949-251-0516

APPROVED BY: [signature] DATE: 7/18/02
TREVOR S. DODSON R.C.E. NO. 42029
REGISTRATION EXPIRES 03-31-04

MARK	REVISIONS:	APPR.	DATE
	ADDED PLAN AND PROFILE LINE "F"		

DESIGNED BY FJE DRAWN BY WPS CHECKED BY TSD

CITY OF RIVERSIDE
PUBLIC WORKS DEPARTMENT

	DATE	BY
APPROVED BY		
PRINCIPAL ENGINEER		
PARK DEPARTMENT	--	--
TRAFFIC DIVISION	--	--
DEPUTY P.W. DIRECTOR		
STREET SERVICES	7/10/02	JM

PUBLIC WORKS DIRECTOR
DATE 8/16/02

CARRIAGE COURT
STORM DRAIN IMPROVEMENT PLANS
TRACT 28866- 6

HORIZ. SCALE: VERT. SCALE:

ACCOUNT NO. 31450
D-673
SHEET 5A OF 5

I:/52512/IMPLANS/ST-05Adwg 6/20/02