STORM DRAIN IMPROVEMENT PLANS

TRACT 28863 & 28866-3 IN THE CITY OF RIVERSIDE
LINES A, A-8, A-6, A-7, AB, AW, AW-1, AW-2, AR & AA

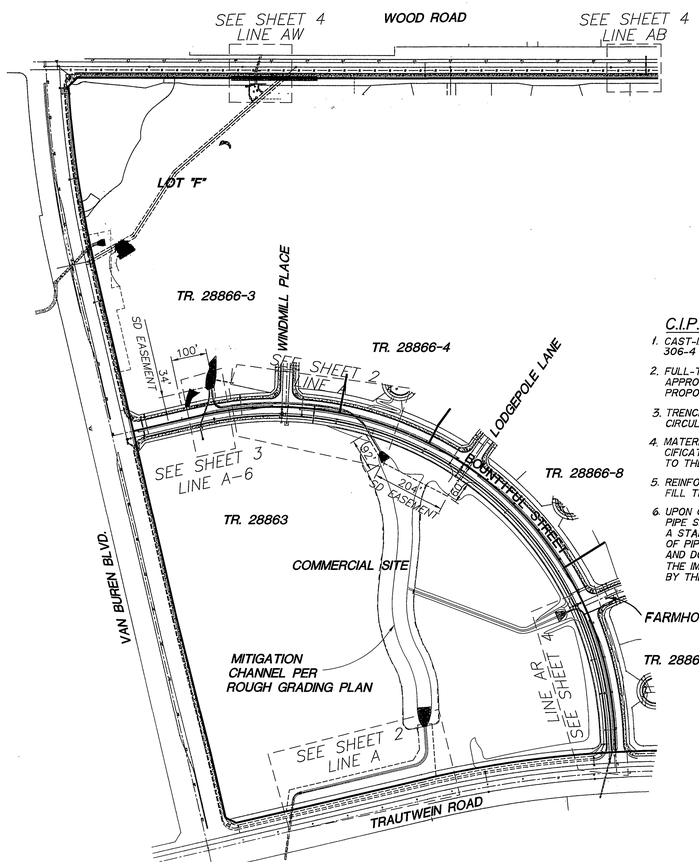

SCALE: 1" = 200'

INDEX MAP

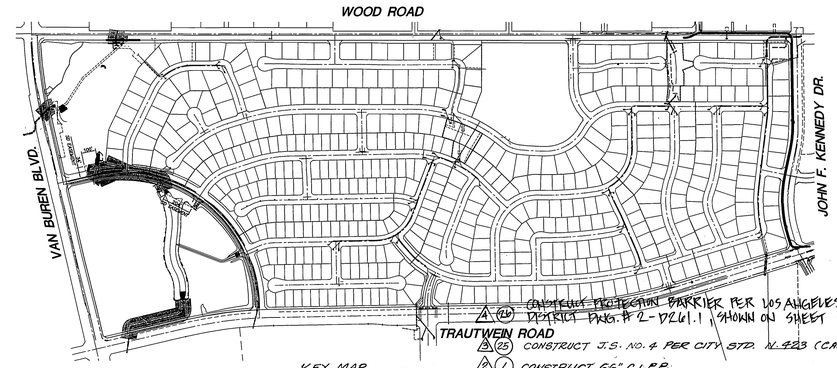

KEY MAP
N.T.S.

A (126) CATTLE PROTECTION BARRIER PER LOS ANGELES FLOOD CONTROL DISTRICT DWG. # 2-D261.1, SHOWN ON SHEET 2B — 1 EA
A (25) CONSTRUCT J.S. NO. 4 PER CITY STD. DWG. NO. 423 (CASE 2) — 1 EA
A (7) CONSTRUCT 66" C.I.P.P. — 486 LF
A (79) REMOVE & DISPOSE PORTION OF EXISTING 54" RCP SD — 32 LF

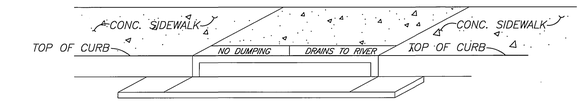

CATCH BASIN STENCILING DETAIL

N.T.S.

(A) STENCILS TO HAVE 2" LETTERS AS FOLLOWS :
NO DUMPING
DRAINS TO RIVER

(B) PLACE BOTH STENCILS CENTERED WITHIN THE CATCHBASIN OPENING AND WITHIN THE TOP OF CURB.

(C) SPRAY BOTH STENCILS WITH WHITE PAINT.

(D) REMOVE STENCILS WHEN PAINT IS DRY.

C.I.P.P. NOTES

1. CAST-IN-PLACE CONCRETE PIPE CONSTRUCTION SHALL BE IN ACCORDANCE WITH 306-4 OF THE STANDARD SPECIFICATION FOR PUBLIC WORKS CONSTRUCTION.
2. FULL-TIME INSPECTION SHALL BE PROVIDED AT NO COST TO THE CITY BY A CITY APPROVED INSPECTOR. TWO WEEKS PRIOR TO CONSTRUCTION THE RESUME OF THE PROPOSED INSPECTOR SHALL BE SUBMITTED TO THE CITY FOR APPROVAL.
3. TRENCHING SHALL BE COMPLETED WITH A CURVED BUCKET TO CREATE A SEMI-CIRCULAR TRENCH.
4. MATERIAL TESTING IN ACCORDANCE WITH SECTION 306-4.7 OF THE STANDARD SPECIFICATION FOR PUBLIC WORKS CONSTRUCTION SHALL BE COMPLETED AT NO COST TO THE CITY.
5. REINFORCED CONCRETE PIPE SHALL BE USED 10 FEET ON EACH SIDE OF ALL CUT-FILL TRANSITIONS.
6. UPON COMPLETION OF CONSTRUCTION, A REPORT COVERING CONSTRUCTION OF THE PIPE SHALL BE PREPARED AND SUBMITTED TO THE CITY. THE REPORT SHALL INCLUDE A STANDARD VHS VIDEO INSPECTION OF THE PIPE, DAILY LOGS COVERING THE METHOD OF PIPE CONSTRUCTION, A SUMMARY OF THE MATERIAL TESTS, PROBLEMS ENCOUNTER AND DOCUMENTATION OF ALL REPAIRS. APPROVAL OF THE REPORT AND RELEASE OF THE IMPROVEMENT BOND IS CONTINGENT UPON RECEIPT AND APPROVAL OF THE REPORT BY THE CITY.

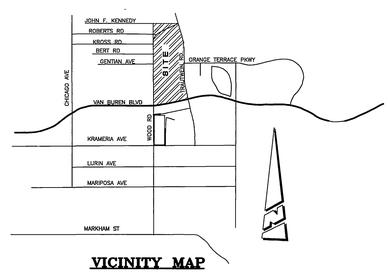

VICINITY MAP
N.T.S.

CONSTRUCTION NOTES & QUANTITY ESTIMATE QUANTITY ESTIMATE IS FOR BONDING PREPOSSESS ONLY. CONTRACTOR SHALL VERIFY ALL QUANTITIES PRIOR TO CONSTRUCTION		TR.28866-3	TR. 28863 COMMERCIAL
(2)	CONSTRUCT 24" RCP (D-LOAD PER PLAN)	45 L.F.	84 L.F.
(5)	CONSTRUCT 60" RCP (D-LOAD PER PLAN)	8 L.F.	~~486 L.F.~~ 1
(11)	CONSTRUCT 18" RCP (D-LOAD PER PLAN)	31 L.F.	84 L.F.
(12)	CONSTRUCT 30" RCP (D-LOAD PER PLAN)	57 L.F.	477 L.F.
(14)	CONSTRUCT 54" RCP (D-LOAD PER PLAN)	41 L.F.	92 L.F.
(15)	CONSTRUCT 51" RCP (D-LOAD PER PLAN)	---	56 L.F.
(21)	CONSTRUCT JUNCTION STRUCTURE B PER CITY STD. DWG. NO. 421	2 EA.	---
(23)	CONSTRUCT J.S. NO. 3 PER R.C.F.C. & W.C.D. STD. DWG. NO. JS228 SEE SHEET 5	1 EA.	---
(24)	CONSTRUCT CONCRETE COLLAR PER CITY STD. DWG. NO. 424	---	2 EA.
(30)	CONSTRUCT MANHOLE AX PER CITY STD. DWG. NO. 430	---	1 EA.
(31)	CONSTRUCT MANHOLE EZ PER CITY STD. DWG. NO. 431	---	2 EA.
(45)	CONSTRUCT CATCH BASIN PER CITY STD. DWG. NO. 405 (W & V PER PLAN)	3 EA.	2 EA.
(80)	CONST. SINGLE BOX CULVERT PER CAL. STD. PLAN NO. D80 (SIZE PER PLAN) SEE SHEET 5	50 L.F.	---
(85)	CONST. TYPE "E" STEPPED WINGWALL (SINGLE BOX CULVERT) PER CALTRANS STD. PLAN NO. D85 & MISC. DETAILS PER CALTRANS STD. PLAN NO. D82 SEE SHEET 5	1 EA.	
(88)	CONSTRUCT HEADWALL PER CALTRANS STD. PLAN NO. D90 SEE SHEET 5	1 EA.	1 EA.
(89)	CONSTRUCT HEADWALL PER CALTRANS STD. PLAN NO. D89 SEE SHEET 5	1 EA.	1 EA.
(90)	CONSTRUCT TRASH RACK PER APWA STD. 360-0 SEE SHEET 6	2 EA.	~~1 EA.~~ 1
(91)	CONSTRUCT TRASH RACK PER APWA STD 361-0 SEE SHEET 5	---	1 EA.
(93)	INSTALL CMP RISER PER DETAIL ON SEE SHEET 3	---	1 EA.
(95)	INSTALL GROUTED RIPRAP (D50=1-TON (34") 51-INCH THICK).	---	5 CUYD
(96)	INSTALL GROUTED RIPRAP (D50= 150 LB. (15") 23-INCH THICK).	2 CUYD	46 CUYD
(99)	INSTALL COCONUT FIBER EROSION BLANKET TYPE C125 BN PER NORTH AMERICAN GREEN SPECIFICATIONS, OR APPROVED EQUAL	221 SQYD	180 SQYD
(13)	CONSTRUCT 12" PVC SOLID WALL SDR 35 PIPE	---	1 EA.
(20)	CONSTRUCT J.S. NO. 4 PER CITY STD. NO. 423 CASE 3	---	1 EA.

GENERAL NOTES

1. IT SHALL BE THE RESPONSIBILITY OF THE CONTRACTOR TO CLEAR THE RIGHT-OF-WAY IN ACCORDANCE WITH THE PROVISIONS OF LAW AS IT AFFECTS EACH UTILITY INCLUDING IRRIGATION LINES AND APPURTENANCES AND AT NO COST TO THE CITY.
2. CONSTRUCTION SHALL BE IN ACCORDANCE WITH THE CITY OF RIVERSIDE DEPT. OF PUBLIC WORKS STANDARD DRAWINGS, IT'S SUPPLEMENTAL NOTES, AND THE STANDARD SPECIFICATIONS FOR PUBLIC WORKS CONSTRUCTION, CURRENT EDITION.
3. THE PRIVATE ENGINEER SIGNING THESE PLANS IS RESPONSIBLE FOR ASSURING THE ACCURACY AND ACCEPTABILITY OF THE WORK HEREON. IN THE EVENT OF DISCREPANCIES ARISING DURING CONSTRUCTION, THE PRIVATE ENGINEER SHALL BE RESPONSIBLE FOR DETERMINING AN ACCEPTABLE SOLUTION AND REVISING THE PLANS FOR APPROVAL BY THE CITY.
4. QUANTITIES SHOWN ARE FOR INFORMATION ONLY AND THE CITY OF RIVERSIDE IS NOT RESPONSIBLE FOR THEIR ACCURACY.
5. THE DEVELOPER SHALL BE RESPONSIBLE FOR PRESERVING OR RE-ESTABLISHING AND REFERENCING SURVEY MONUMENTS DESTROYED, DISTURBED OR BURIED AS A RESULT OF CONSTRUCTION SHOWN HEREON.
6. ALL FLAGGED ELEVATIONS SHALL BE STAKED IN THE FIELD BY THE PRIVATE ENGINEER.
7. TRIM EDGE OF EXISTING PAVEMENT WHERE NEW PAVEMENT JOINS TO A SMOOTH, STRAIGHT LINE. CONSTRUCT MATCH-UP PAVING AS SHOWN ON PLAN AND OVERLAY PAVING AS DIRECTED IN THE FIELD TO PRODUCE A SMOOTH SECTION.
8. ALL STATIONING REFERS TO CENTERLINE OF CONSTRUCTION UNLESS OTHERWISE NOTED. STATIONING FOR LATERALS AND CONNECTOR PIPES REFER TO THE CENTERLINE-CENTERLINE INTERSECTION.
9. HOURS OF OPERATION ARE 7 A.M. TO 6 P.M. MONDAY THROUGH FRIDAY. DUST SHALL BE CONTROLLED BY WATERING OR OTHER APPROVED METHODS.
10. NO PERSON SHALL PERFORM ANY CONSTRUCTION ACTIVITY OR INSTALL ANY OBJECTS WITHIN THE PUBLIC RIGHTS-OF-WAY OR EASEMENTS OF THE CITY OF RIVERSIDE WITHOUT A VALID CONSTRUCTION PERMIT OR A STREET OPENING PERMIT OR AN ENCROACHMENT PERMIT ISSUED BY THE CITY'S PUBLIC WORKS DEPARTMENT.
11. ANY TRAFFIC CONTROL STRIPING OBLITERATED AND OR BADLY WORN DURING CONSTRUCTION SHALL BE RESTORED BY THE CONTRACTOR WITHIN FIVE DAYS AFTER NOTIFICATION FROM THE CITY INSPECTORS.
12. THE CONTRACTOR SHALL CALL IN A LOCATION REQUEST TO UNDERGROUND SERVICE ALERT (U.S.A.), PHONE No. 1-800-227-2600, TWO WORKING DAYS BEFORE DIGGING. NO CONSTRUCTION PERMIT WILL BE ISSUED BY THE PUBLIC WORKS DEPARTMENT INVOLVING EXCAVATION FOR UNDERGROUND FACILITIES UNLESS THE APPLICANT HAS BEEN PROVIDED AN INQUIRY IDENTIFICATION NUMBER BY U.S.A.
13. BEFORE THE RIPRAP IS ACCEPTED AS PLACED AT THE OUTLET OF ANY DRAINAGE STRUCTURE, IT SHALL BE TESTED UNDER FLOWS AS CLOSE AS POSSIBLE TO DESIGN CONDITIONS WITH WATER OBTAINED FROM FIRE HYDRANTS IN THE IMMEDIATE AREA.
14. ALL CROSS SECTIONS ARE TAKEN LOOKING UPSTREAM.
15. CONTRACTOR TO VERIFY EXISTING STORM DRAIN ELEVATIONS PRIOR TO CONSTRUCTION.
16. PIPE BEDDING SHALL BE PER CITY OF RIVERSIDE STD. DWG. No. 452. CASE I UNLESS OTHERWISE NOTED ON PLANS.
17. THE STORM DRAIN CONTRACTOR SHALL ADJUST STORM DRAIN MANHOLES TO FINAL GRADE AFTER PAVING IS COMPLETED.
18. PIPE SECTIONS TO BE BEVELED AT ONE OR BOTH ENDS AS NEEDED TO MEET SYSTEM DESIGN PARAMETERS. SECTIONS BEVELED IN THIS MANNER NORMALLY FIT TOGETHER ON A 90-, 45-, OR 22.5 FOOT RADIUS CURVE.

HOLD HARMLESS INDEMNIFICATION CLAUSE

THE CONTRACTOR AGREES THAT HE SHALL ASSUME SOLE AND COMPLETE RESPONSIBILITY FOR JOB SITE CONDITIONS DURING THE COURSE OF CONSTRUCTION OF THE PROJECT INCLUDING SAFETY OF ALL PERSONS AND PROPERTY; THAT THIS REQUIREMENT SHALL APPLY CONTINUOUSLY AND NOT BE LIMITED TO NORMAL WORKING HOURS; AND THAT THE CONTRACTOR SHALL DEFEND, INDEMNIFY, AND HOLD THE CITY OF RIVERSIDE, THE OWNER, AND THE PRIVATE ENGINEERS HARMLESS FOR ANY AND ALL LIABILITY; REAL OR ALLEGED, IN CONNECTION WITH PERFORMANCE OF WORK ON THIS PROJECT, EXCEPTING FOR LIABILITY ARISING FROM THE SOLE NEGLIGENCE OF THE OWNER OR THE ENGINEER.

EXISTING UNDERGROUND STRUCTURES

THE EXISTENCE AND LOCATION OF ANY UNDERGROUND UTILITY PIPE STRUCTURES OR CONDUITS SHOWN ON THESE PLANS ARE OBTAINED BY A SEARCH OF THE AVAILABLE RECORDS. TO THE BEST OF OUR KNOWLEDGE, THERE ARE NO EXISTING UTILITIES EXCEPT AS SHOWN ON THESE PLANS. IT SHALL BE THE CONTRACTOR'S RESPONSIBILITY TO NOTIFY THE OWNERS OF THE UTILITIES OR STRUCTURES CONCERNED BEFORE STARTING WORK. CONTRACTOR FURTHER ASSUMES ALL LIABILITY AND RESPONSIBILITY FOR THE UNDERGROUND UTILITY PIPES, CONDUITS OR STRUCTURES SHOWN OR NOT SHOWN ON THESE PLANS.

NOTICE TO CONTRACTOR

CONTRACTOR SHALL VERIFY ALL CONDITIONS AND DIMENSIONS AND SHALL REPORT ALL DISCREPANCIES TO THE ENGINEER PRIOR TO THE COMMENCEMENT OF WORK.

NOTICE TO CONTRACTOR

CONTRACTOR SHALL VERIFY ALL CONDITIONS AND DIMENSIONS AND SHALL REPORT ALL DISCREPANCIES TO THE ENGINEER PRIOR TO THE COMMENCEMENT OF WORK.

REGISTERED PROFESSIONAL ENGINEER TREVOR SCOTT DODSON No. 42029 EXP. 3-31-04 CIVIL STATE OF CALIFORNIA

#3 & #4
REVISION # 2 BY MDS CONSULTING
REVISION #1 BY MDS CONSULTING

REV. #3 BY
MDS CONSULTING
17320 REDHILL AVE., SUITE 350
IRVINE, CA. 92614
(949) 251-8821
4-15-03
TREVOR DODSON RCE # 42029

CITY OF RIVERSIDE
PUBLIC UTILITIES DEPARTMENT-ELECTRIC
OVERHEAD & UNDERGROUND

APPROVED BY — DATE 2-29-00

MDS CONSULTING
17320 REDHILL AVE, SUITE 350
IRVINE, CA 92614
(949) 251-8821
4/29/02 — DATE — TREVOR DODSON

REVIEW BY:
WESTERN MUNICIPAL WATER DISTRICT
for Non-Interference Compliance
SHEET 1 THROUGH 6
DATE: 3/6/2001
CIVIL ENGINEER — R.C.E. 30927

CHARTER COMMUNICATIONS
APPROVED BY — DATE 2-29-00

TELEPHONE PAC-BELL
APPROVED BY — DATE 02-29-00

SOUTHERN CALIFORNIA GAS COMPANY
APPROVED BY — DATE 2-2-00

CITY BUSINESS TAX CERTIFICATION NO. 033595 EXP. DATE 4/2/01 *AS-BUILT PER PLANS 10-27-05 4H

CALL BEFORE YOU DIG
Underground Service Alert
Call: TOLL FREE
1-800 227-2600
TWO WORKING DAYS BEFORE YOU DIG

PRIVATE ENGINEERING NOTE
CONSTRUCTION CONTRACTOR AGREES THAT IN ACCORDANCE WITH GENERALLY ACCEPTED CONSTRUCTION PRACTICES, CONSTRUCTION CONTRACTOR WILL BE REQUIRED TO ASSUME SOLE AND COMPLETE RESPONSIBILITY FOR JOB SITE CONDITIONS DURING THE COURSE OF CONSTRUCTION OF THE PROJECT, INCLUDING SAFETY OF ALL PERSONS AND PROPERTY; THAT THIS REQUIREMENT SHALL BE MADE TO APPLY CONTINUOUSLY AND NOT BE LIMITED TO NORMAL WORKING HOURS, AND CONSTRUCTION CONTRACTOR FURTHER AGREES TO DEFEND, INDEMNIFY AND HOLD DESIGN PROFESSIONAL HARMLESS FROM ANY AND ALL LIABILITY, REAL OR ALLEGED, IN CONNECTION WITH THE PERFORMANCE OF WORK ON THIS PROJECT, EXCEPTING LIABILITY ARISING FROM THE SOLE NEGLIGENCE OF DESIGN PROFESSIONAL.

BENCHMARK
RIVERSIDE COUNTY BENCHMARK, STAMPED VBB-64
AT SOUTHWEST CORNER OF PLUMMER ROAD AND VAN BUREN BOULEVARD. 259.0 FEET SOUTH OF VAN BUREN BOULEVARD. 205.0 FEET WEST OF PLUMMER ROAD, ON THE TOP OF A 4.0 FOOT x 10.0 FOOT GRANITE BOULDER A BRASS DISK FLUSH AND MARKED.
ELEV. 1638.14.

REGISTERED PROFESSIONAL ENGINEER Civil Ned J. Araujo No. 057835 Exp. 6-30-02 STATE OF CALIFORNIA

The Keith Companies TKC
22890 Cactus Avenue, Suite 300 Moreno Valley, CA 92553-9024 (909) 653-0234

APPROVED BY:
DATE: 2/29/00 — NED J. ARAUJO R.C.E. NO. 57835 REGISTRATION EXPIRES 06-30-02

MARK	REVISIONS:	APPR.	DATE
4	REV. CONST. NOTES & ADDED STD. DWG.	RVZ	7-10-03
3	ADDED J.S. (SHEET 2)	RVZ	4-21-03
2	CONST. 66" CIPP IN LIEU OF 60" RCP	RVZ	9-3-02
1	ADDED SHEET 2A & REV QTY	RV	5/29/02
	REVISED LINE "A" - (SHEET 2)		

DESIGNED BY A.N. DRAWN BY A.N. CHECKED BY N.A.

CITY OF RIVERSIDE
PUBLIC WORKS DEPARTMENT

	DATE	BY
APPROVED BY		
PRINCIPAL ENGINEER	8/16/2000	RV
PARK DEPARTMENT		
TRAFFIC DIVISION		
P.W. ENGR. MANAGER	8/16/00	TAB
STREET SERVICES	8/21/00	

PUBLIC WORKS DIRECTOR
DATE 8-17-00

STORM DRAIN IMPROVEMENT PLANS
TRACT 28863 & 28866-3
STORM DRAIN FOR AREA "A"
TITLE SHEET

HORIZ. SCALE: VERT. SCALE:

ACCOUNT NO. 31414.000
D-674
SHEET 1 OF 6

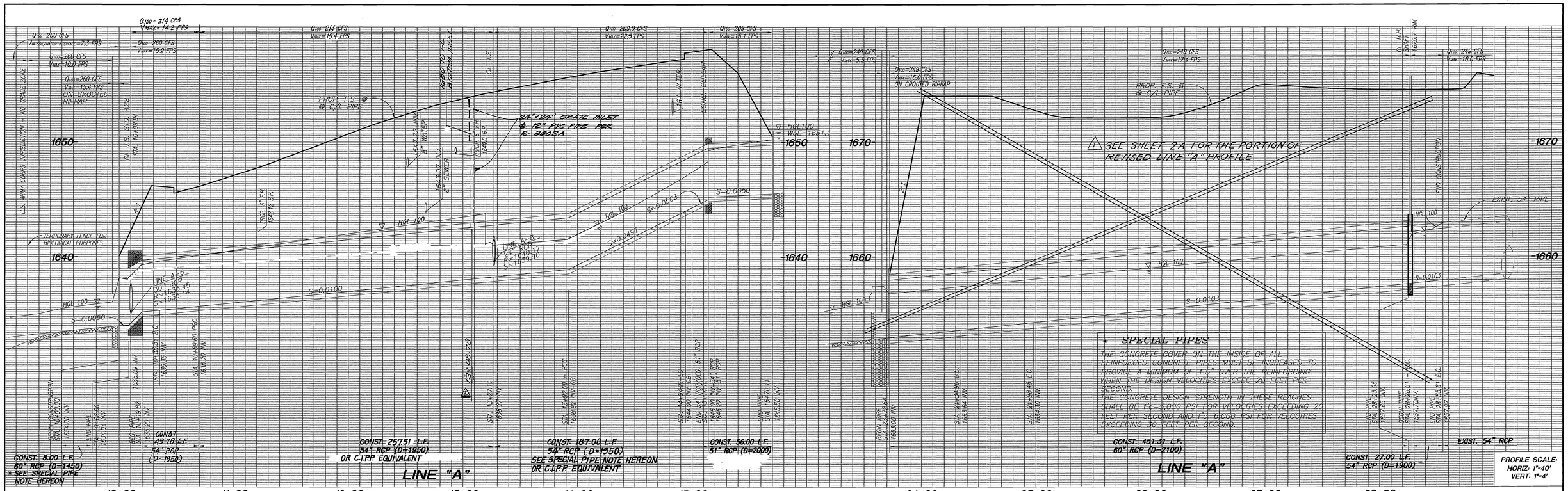

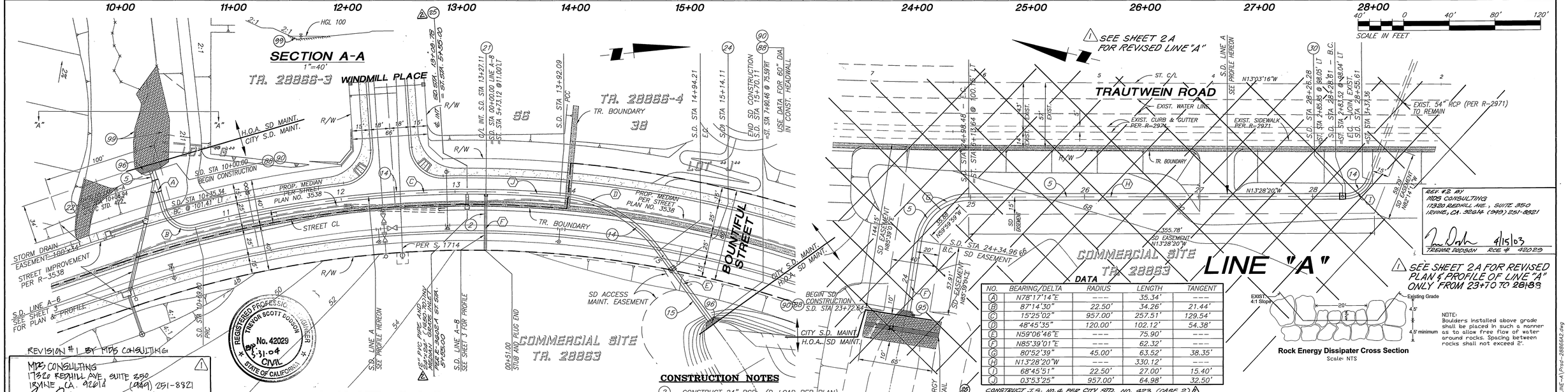

Underground Service Alert
Call: TOLL FREE 1-800 227-2600
TWO WORKING DAYS BEFORE YOU DIG

PRIVATE ENGINEERING NOTE

CONSTRUCTION CONTRACTOR AGREES THAT IN ACCORDANCE WITH GENERALLY ACCEPTED CONSTRUCTION PRACTICES, CONSTRUCTION CONTRACTOR WILL BE REQUIRED TO ASSUME SOLE AND COMPLETE RESPONSIBILITY FOR JOB SITE CONDITIONS DURING THE COURSE OF CONSTRUCTION OF THE PROJECT, INCLUDING SAFETY OF ALL PERSONS AND PROPERTY; THAT THIS REQUIREMENT SHALL BE MADE TO APPLY CONTINUOUSLY AND NOT BE LIMITED TO NORMAL WORKING HOURS, AND CONSTRUCTION CONTRACTOR FURTHER AGREES TO DEFEND, INDEMNIFY AND HOLD DESIGN PROFESSIONAL HARMLESS FROM ANY AND ALL LIABILITY, REAL OR ALLEGED, IN CONNECTION WITH THE PERFORMANCE OF WORK ON THIS PROJECT, EXCEPTING LIABILITY ARISING FROM THE SOLE NEGLIGENCE OF DESIGN PROFESSIONAL.

BENCHMARK

RIVERSIDE COUNTY BENCHMARK, STAMPED V88-64 AT SOUTHWEST CORNER OF PLUMMER ROAD AND VAN BUREN BOULEVARD. 259.0 FEET SOUTH OF VAN BUREN BOULEVARD. 205.0 FEET WEST OF PLUMMER ROAD, ON THE TOP OF A 4.0 FOOT x 10.0 FOOT GRANITE BOULDER A BRASS DISK FLUSH AND MARKED.
ELEV. 1638.14

REGISTERED PROFESSIONAL ENGINEER Civil Ned J. Araujo No. 057835 Exp. 6-30-02 STATE OF CALIFORNIA

The Keith Companies TKC
22690 Cactus Avenue, Suite 300 Moreno Valley, CA 92553-9024 (909) 653-0234

APPROVED BY: DATE: 5/26/00
NED J. ARAUJO R.C.E. NO. 57835
REGISTRATION EXPIRES 06-30-02

MARK	REVISIONS:	APPR.	DATE
2	ADDED J.S.	BJZ	4-21-00
1	REVISED PORTION OF LINE "A"	BJZ	5/26/00

DESIGNED BY A.N. DRAWN BY A.N. CHECKED BY N.A.

CITY OF RIVERSIDE
PUBLIC WORKS DEPARTMENT

APPROVED BY	DATE	BY
PRINCIPAL ENGINEER	8/15/2000	
PARK DEPARTMENT		
TRAFFIC DIVISION		
P.W. ENGR. MANAGER	8/16/00	
STREET SERVICES	8/16/0	

PUBLIC WORKS DIRECTOR
DATE 8-17-00

STORM DRAIN IMPROVEMENT PLANS
TRACT 28863 & 28866-3
LINES A & A-8
SEE SHT 2A FOR REVISED PORTION OF LINE "A"
LINE "A" STA. 10+00.00 TO STA. 15+70.11 AND STA. 23+72.64 TO STA. 28+55.61
HORIZ. SCALE: 1"= 40' VERT. SCALE: 1"= 4'

ACCOUNT NO. 31414.000
D-674
SHEET 2 OF 6

INDEXED 9-12-2000 GH

Plotted: 05/28/00 15:15:56 : N:\31414.000\dwg\storm_drain\LINE-A\Prof-28866A2.dwg

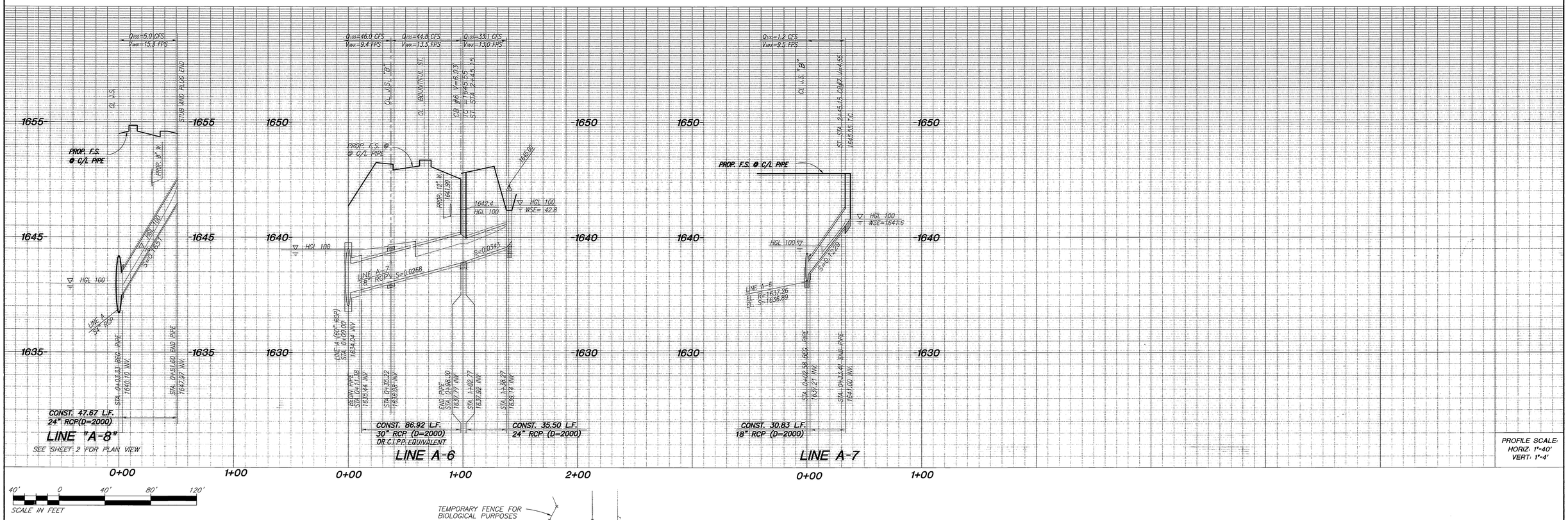

DATA

NO.	BEARING/DELTA	RADIUS	LENGTH	TANGENT
(B)	N71°07'28"W	---	98.27'	---
(C)	N76°53'39"E	---	35.50'	---
(D)	N13°06'21"W	---	33.41'	---

CONSTRUCTION NOTES

(2) CONSTRUCT 24" RCP (D-LOAD PER PLAN)

(11) CONSTRUCT 18" RCP (D-LOAD PER PLAN)

(12) CONSTRUCT 30" RCP (D-LOAD PER PLAN)

(21) CONSTRUCT JUNCTION STRUCTURE B PER CITY STD. 421

(45) CONSTRUCT CATCH BASIN PER CITY STD. DWG. NO. 405 (W & V PER PLAN)

(93) INSTALL CMP RISER PER DETAIL HEREON

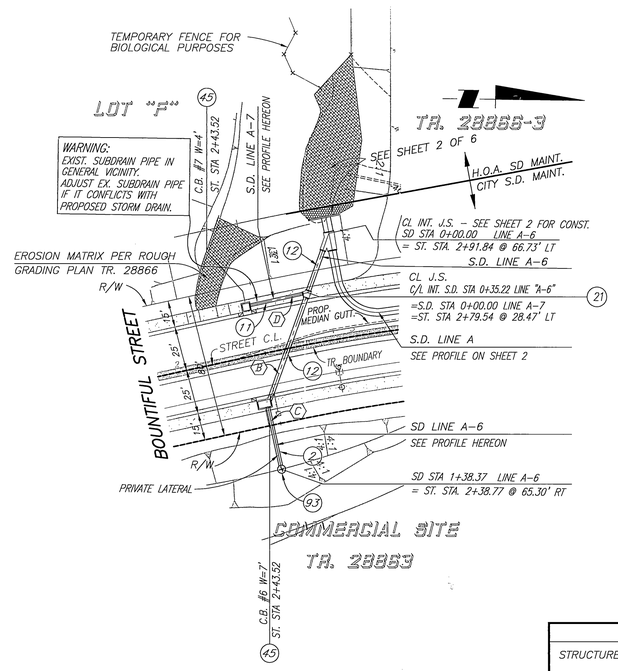

NOTE TO CONTRACTOR:

STORAGE

1. SEDIMENT FROM BASIN CLEANOUT OPERATIONS MUST BE DISPOSED OF IN SUCH A MANNER AS TO PREVENT ITS RETURN INTO THE DESILTING BASIN OR ITS MOVEMENT INTO DOWNSTREAM AREAS DURING SUBSEQUENT RUNOFFS.
2. THE CONTRACTOR SHALL BE RESPONSIBLE AND SHALL TAKE NECESSARY PRECAUTIONS TO PREVENT PUBLIC TRESPASS TO AREAS WHERE IMPOUNDED WATER CREATES A HAZARDOUS CONDITION.

EMBANKMENT

1. ALL BORROW AREAS OUTSIDE THE POOL SHALL BE GRADED, SEEDED, AND LEFT IN SUCH A MANNER THAT THEY ARE WELL-DRAINED AND PROTECTED FROM EROSION.
2. THE MATERIAL SHALL BE FREE OF ALL SOD, ROOTS, WOODY VEGETATION, LARGE ROCK (EXCEEDING 12" IN DIAMETER), AND OTHER DEBRIS.
3. THE EMBANKMENT SHALL BE CONSTRUCTED TO AN ELEVATION WHICH PROVEDES FOR ANTICIPATED SETLEMENT TO DESIGN ELEVATION (ALLOW 10% FOR SETTLEMENT).
4. THE FOUNDATION FOR THE EMBANKMENT SHALL BE SCARIFIED T PRIOR TO PLACEMENT OF FILL.
5. PLACEMENT OF MATERIAL SHALL BE STARTED AT THE LOWEST POINT OF THE FOUNDATION AND SHALL BE PLACE IN 6-INCH MAXIMUM LIFTS WHICH ARE TO BE CONTINOUS OVER THE ENTIRE LENGTH OF THE FILL AND APPROXIMATELY HORIZONTAL. EMBANKMENT SHALL HAVE A RELATIVE COMPACTION OF AT LEAST 90%.
6. EMBANKMENT SIDE SLOPES SHALL BE NO STEEPER THAN 2:1

SITE PREPARATION

1. THE EMBANKMENT FOUNDATION AREA AND RESERVOIR AREA SHALL BE CLEARED OF ALL TREES, STUMPS, ROOTS, BRUSH, BOULDERS, AND DEBRIS.
2. ALL TOPSOIL CONTAINING EXCESSIVE AMOUNTS OF ORGANIC MATTER SHALL BE REMOVED.

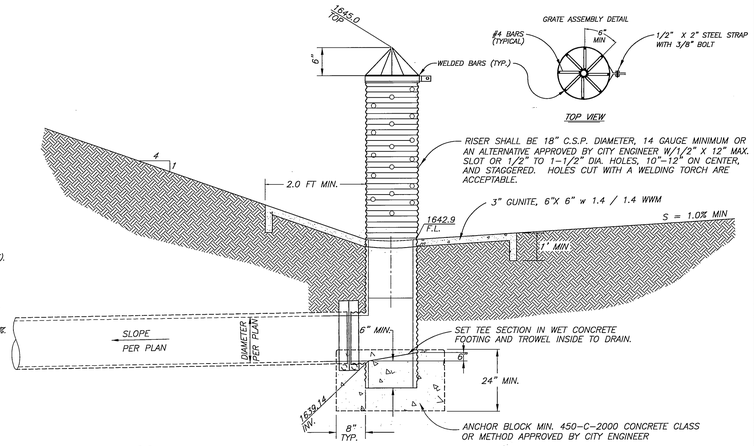

(93) LINE A-6 TEMPORARY DESILTER RISER DETAIL

N.T.S.

CITY OF RIVERSIDE JUNCTION STRUCTURE DATA TABLE

STRUCTURE	MAIN LINE	LATERAL LEFT NAME	A	B	C'	E'	L'	LATERAL RIGHT NAME	A	B'	C'	E'	L'	D_1	D_2
10+40.34	A-6	A-7	59°20'58"	18"	3.0'	2.4'	2.7'							30"	30"

LINE A-6 & A-7

*AS-BUILT PER PLANS 10-27-05 GH

CALL BEFORE YOU DIG — Underground Service Alert — Call: TOLL FREE 1-800 227-2600 — TWO WORKING DAYS BEFORE YOU DIG

PRIVATE ENGINEERING NOTE

CONSTRUCTION CONTRACTOR AGREES THAT IN ACCORDANCE WITH GENERALLY ACCEPTED CONSTRUCTION PRACTICES, CONSTRUCTION CONTRACTOR WILL BE REQUIRED TO ASSUME SOLE AND COMPLETE RESPONSIBILITY FOR JOB SITE CONDITIONS DURING THE COURSE OF CONSTRUCTION OF THE PROJECT, INCLUDING SAFETY OF ALL PERSONS AND PROPERTY; THAT THIS REQUIREMENT SHALL BE MADE TO APPLY CONTINUOUSLY AND NOT BE LIMITED TO NORMAL WORKING HOURS, AND CONSTRUCTION CONTRACTOR FURTHER AGREES TO DEFEND, INDEMNIFY AND HOLD DESIGN PROFESSIONAL HARMLESS FROM ANY AND ALL LIABILITY, REAL OR ALLEGED, IN CONNECTION WITH THE PERFORMANCE OF WORK ON THIS PROJECT, EXCEPTING LIABILITY ARISING FROM THE SOLE NEGLIGENCE OF DESIGN PROFESSIONAL.

BENCHMARK

RIVERSIDE COUNTY BENCHMARK, STAMPED VBB-64 AT SOUTHWEST CORNER OF PLUMMER ROAD AND VAN BUREN BOULEVARD. 259.0 FEET SOUTH OF VAN BUREN BOULEVARD. 205.0 FEET WEST OF PLUMMER ROAD, ON THE TOP OF A 4.0 FOOT x 10.0 FOOT GRANITE BOULDER A BRASS DISK FLUSH AND MARKED.
ELEV. 1638.14

REGISTERED PROFESSIONAL ENGINEER — Civil — Ned J. Araujo — No. 057835 — Exp. 6-30-02 — STATE OF CALIFORNIA

The Keith Companies TKC
22690 Cactus Avenue, Suite 300 Moreno Valley, CA 92553-9024 (909) 653-0224

APPROVED BY: [signature]
DATE: 5/26/00 NED J. ARAUJO R.C.E. NO. 57835 REGISTRATION EXPIRES 06-30-02

MARK	REVISIONS	APPR.	DATE

DESIGNED BY A.N. DRAWN BY A.N. CHECKED BY N.A.

CITY OF RIVERSIDE
PUBLIC WORKS DEPARTMENT

APPROVED BY	DATE	BY
PRINCIPAL ENGINEER	8/16/2000	
PARK DEPARTMENT		
TRAFFIC DIVISION		
P.W. ENGR. MANAGER	8/16/00	TOB
STREET SERVICES	8/16/00	

Richard De Beath
PUBLIC WORKS DIRECTOR
DATE 8-17-00

STORM DRAIN IMPROVEMENT PLANS
TRACT 28863 & 28866-3
LINES A-6 AND A-7

HORIZ. SCALE: 1"= 40' VERT. SCALE: 1"= 4'

ACCOUNT NO. 31414.000

D-674

SHEET 3 OF 6

INDEXED 9-12-2000 GH

Plotted: 05/26/00 16:42:53 , N:\31414.000\dwg\storm_drain\LINE-A\Prod-28866A3.dwg

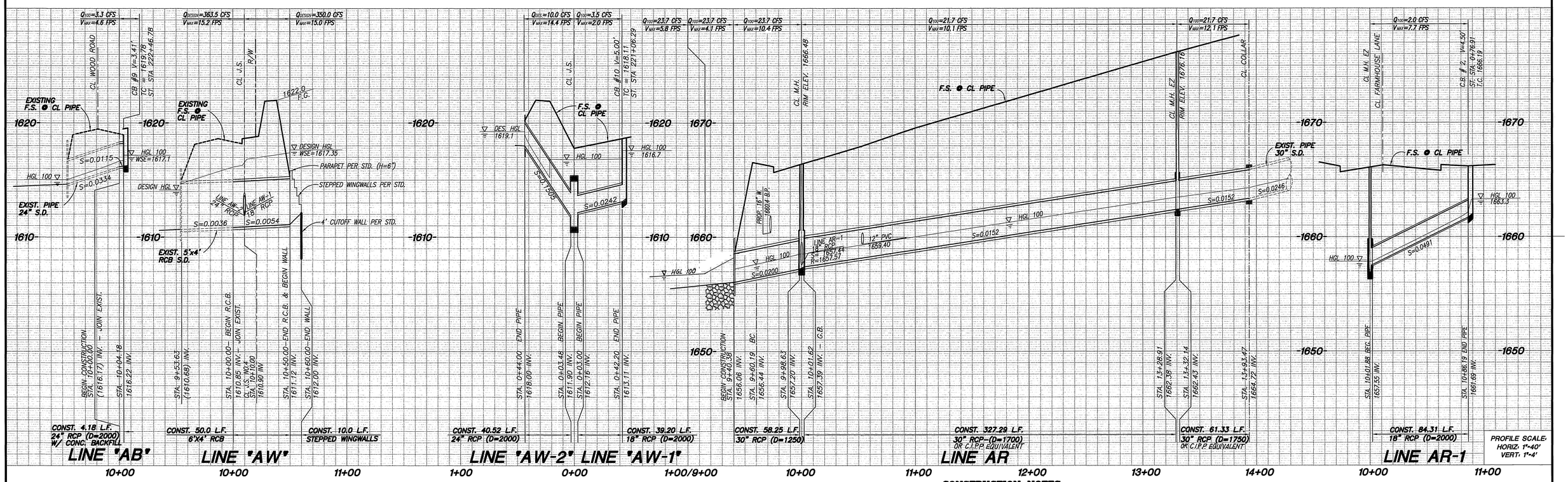

DATA

NO.	BEARING/DELTA	RADIUS	LENGTH	TANGENT
(A)	N24°25'03"W	---	19.81'	---
(B)	91°15'04"	25.00'	39.82'	25.55'
(C)	20°16'39"	935.00'	330.91'	167.20'
(D)	N87°06'39"E	---	62.56'	---
(E)	N23°04'50"W	---	86.19'	---
(F)	N89°56'57"W	---	60.00'	---
(G)	N00°03'03"E	---	42.20'	---
(H)	N89°56'57"W	---	5.18'	---
(I)	N49°56'57"W	---	44.00'	---

CONSTRUCTION NOTES

(2) CONSTRUCT 24" RCP (D-LOAD PER PLAN)
(11) CONSTRUCT 18" RCP (D-LOAD PER PLAN)
(12) CONSTRUCT 30" RCP (D-LOAD PER PLAN)
(19) CONSTRUCT 12" PVC SOLID WALL SDR 35 PIPE
(20) CONSTRUCT J.S. NO. 4 PER CITY STD. NO. 423 CASE 3
(23) CONSTRUCT J.S. NO. 3 PER R.C.F.C. & W.C.D. STD. DWG. NO. JS228 SEE SHEET 5
(24) CONSTRUCT CONCRETE COLLAR PER CITY STD. DWG. NO. 424
(31) CONSTRUCT MANHOLE EZ PER CITY STD. DWG. NO. 431
(45) CONSTRUCT CATCH BASIN PER CITY STD. DWG. NO. 405 (W & V PER PLAN)
(80) CONST. SINGLE BOX CULVERT PER CAL. STD. PLAN NO. D80 (SIZE PER PLAN) SEE SHEET 5
(85) CONST. TYPE "E" STEPPED WINGWALL (SINGLE BOX CULVERT) PER CALTRANS STD. PLAN NO. D85 & MISC. DETAILS PER CALTRANS STD. PLAN NO. D82 SEE SHEET 5
(89) CONSTRUCT HEADWALL PER CALTRANS STD. PLAN NO. D89 SEE SHEET 5
(90) CONSTRUCT TRASH RACK PER APWA STD. 360-0 SEE SHEET 6
(91) CONSTRUCT TRASH RACK PER APWA STD 361-0 CASE-B SEE SHEET 5
(96) INSTALL GROUTED RIPRAP (D50=150-LB (15") 23" THICK,)

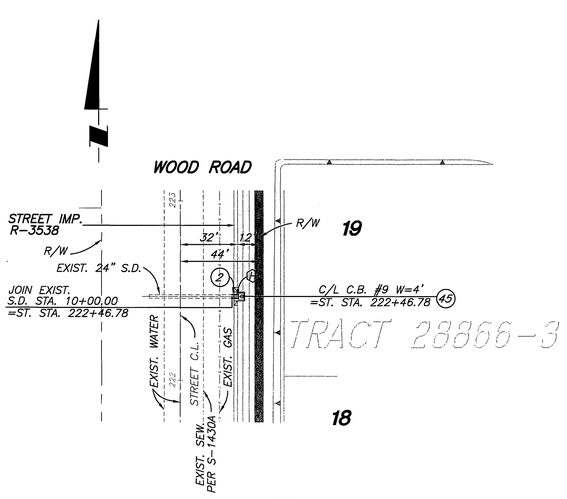

LINE AB

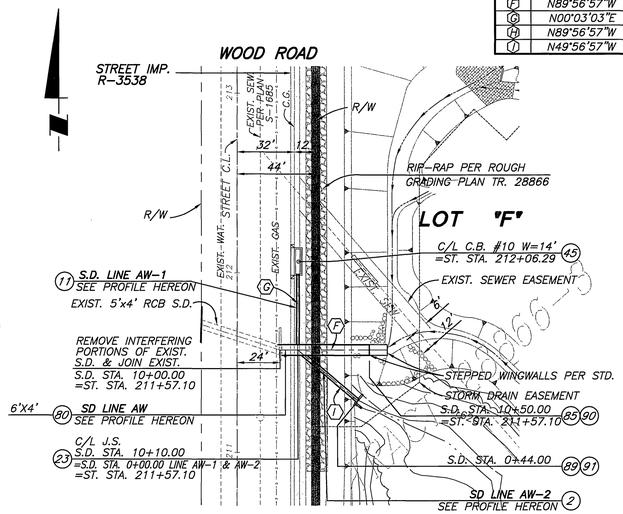

LINES AW, AW-1 & AW-2

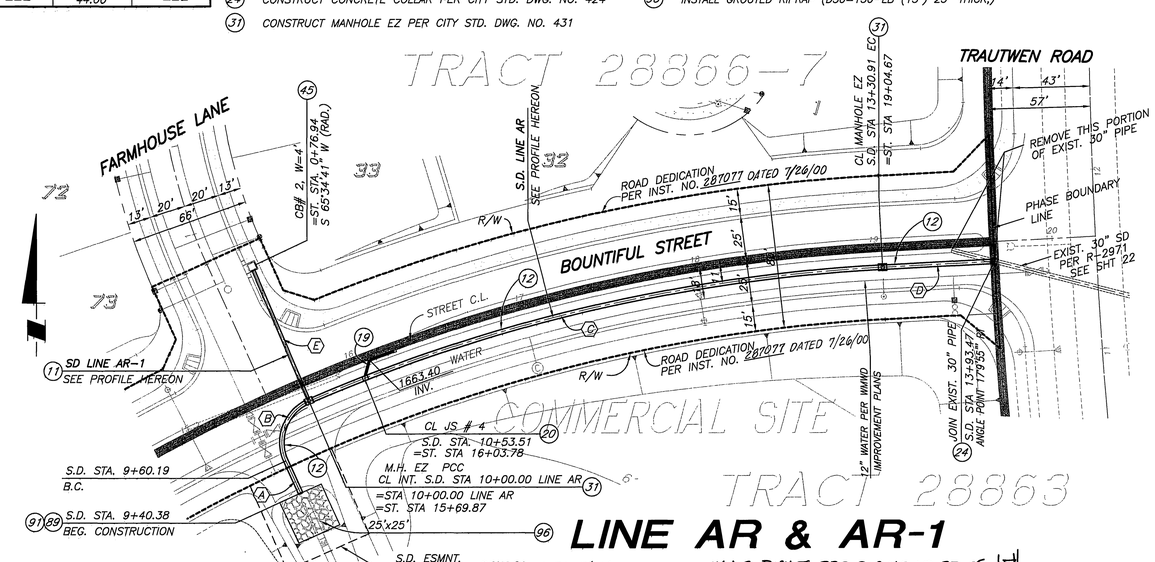

LINE AR & AR-1

*AS-BUILT PER PLANS 10-27-05 GH

Underground Service Alert
Call: TOLL FREE 1-800 227-2600
TWO WORKING DAYS BEFORE YOU DIG

PRIVATE ENGINEERING NOTE

CONSTRUCTION CONTRACTOR AGREES THAT IN ACCORDANCE WITH GENERALLY ACCEPTED CONSTRUCTION PRACTICES, CONSTRUCTION CONTRACTOR WILL BE REQUIRED TO ASSUME SOLE AND COMPLETE RESPONSIBILITY FOR JOB SITE CONDITIONS DURING THE COURSE OF CONSTRUCTION OF THE PROJECT, INCLUDING SAFETY OF ALL PERSONS AND PROPERTY; THAT THIS REQUIREMENT SHALL BE MADE TO APPLY CONTINUOUSLY AND NOT BE LIMITED TO NORMAL WORKING HOURS, AND CONSTRUCTION CONTRACTOR FURTHER AGREES TO DEFEND, INDEMNIFY AND HOLD DESIGN PROFESSIONAL HARMLESS FROM ANY AND ALL LIABILITY, REAL OR ALLEGED, IN CONNECTION WITH THE PERFORMANCE OF WORK ON THIS PROJECT, EXCEPTING LIABILITY ARISING FROM THE SOLE NEGLIGENCE OF DESIGN PROFESSIONAL.

BENCHMARK

RIVERSIDE COUNTY BENCHMARK, STAMPED VBB-84 AT SOUTHWEST CORNER OF PLUMMER ROAD AND VAN BUREN BOULEVARD. 259.0 FEET SOUTH OF VAN BUREN BOULEVARD. 205.0 FEET WEST OF PLUMMER ROAD, ON THE TOP OF A 4.0 FOOT x 10.0 FOOT GRANITE BOULDER A BRASS DISK FLUSH AND MARKED.
ELEV. 1638.14

REGISTERED PROFESSIONAL ENGINEER
Civil
Ned J. Araujo
No. 057835
Exp. 6-30-02
STATE OF CALIFORNIA

The Keith Companies TKC
22690 Cactus Avenue, Suite 300 Moreno Valley, CA 92553-9024 (909) 653-0234

APPROVED BY: [signature]
DATE: 6/23/00
NED J. ARAUJO R.C.E. NO. 57835
REGISTRATION EXPIRES 06-30-02

MARK	REVISIONS:	APPR.	DATE

DESIGNED BY A.N. DRAWN BY A.N. CHECKED BY N.A.

CITY OF RIVERSIDE
PUBLIC WORKS DEPARTMENT

	DATE	BY
APPROVED BY		
PRINCIPAL ENGINEER	8/16/00	[illegible]
PARK DEPARTMENT		
TRAFFIC DIVISION		
P.W. ENGR. MANAGER	8/16/00	[illegible]
STREET SERVICES	8/16/00	[illegible]

Richard M. Scott
PUBLIC WORKS DIRECTOR
DATE 8-17-00

STORM DRAIN IMPROVEMENT PLANS
TRACT 28863 & TRACT 28866-3
OFF-SITE VAN BUREN BLVD.
LINES AB, AW, AW-1, AW-2, AR, & AR-1

HORIZ. SCALE: 1"= 40' VERT. SCALE: 1"= 4'

ACCOUNT NO. 31414.000

D-674

SHEET 4 OF 6

INDEXED 9-12-2000 GH

Plotted: 05/30/00 17:14:17 : N:\31414.000\dwg\storm_drain\LINE-A\Prod-28866A4.dwg

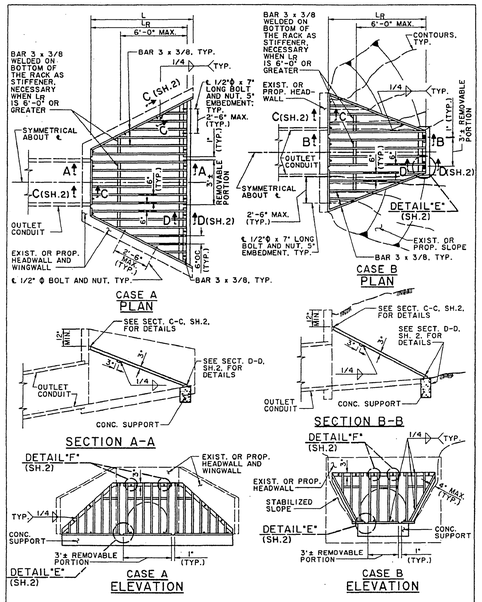

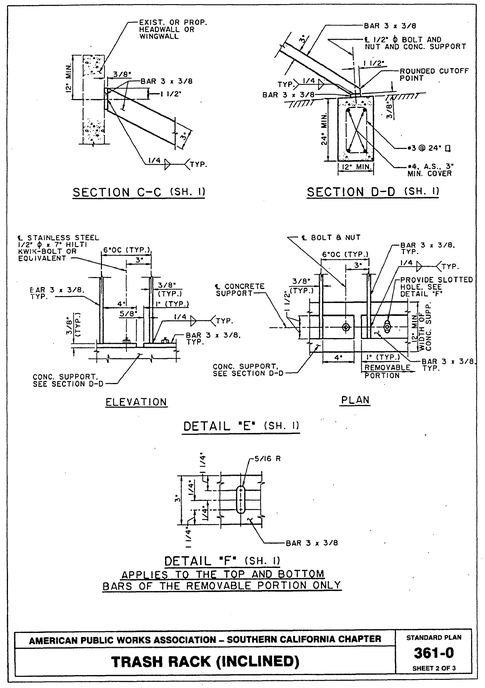

NOTES

1. MAXIMUM SIZE OF OUTLET TO BE USED WITH THIS RACK IS 48" PIPE OR 48" WIDE RCB. MAXIMUM LENGTH OF RACK L_R IS 10'-0".
2. L_R CAN BE ADJUSTED SO THAT THE SLOPE OF THE RACK IS APPROXIMATELY 2 HORIZONTAL TO 1 VERTICAL.
3. THE CONCRETE SUPPORT IS NOT NECESSARY IF EXISTING OR PROPOSED INLET STRUCTURE HAS ADEQUATE SUPPORT CUTOFF WALL. IT DOES NOT ELIMINATE THE NEED FOR A CUTOFF WALL BUT CAN BE INTEGRATED WITH ONE WHEN REQUIRED AT A PARTICULAR INSTALLATION.
4. GALVANIZE ALL EXPOSED FERROUS PARTS AFTER FABRICATION.
5. IF FIELD WELDS ARE NECESSARY, USE GALVICON, GALVALLOY OR AGENCY APPROVED EQUAL FOR COATING.
6. ALL BOLTS SHALL BE 1/2" IN DIAMETER AND 7" IN LENGTH. ON REMOVABLE PORTION OF THE RACK, USE 300 SERIES STAINLESS STEEL BOLTS AND NUTS. FOR WINGWALL BOLTS FOR CASE A, AND WHERE HEADWALL AND WINGWALL ARE EXISTING, HILTI KWIK-BOLT OR EQUIVALENT CAN BE USED.

AMERICAN PUBLIC WORKS ASSOCIATION – SOUTHERN CALIFORNIA CHAPTER
TRASH RACK (INCLINED)
STANDARD PLAN 361-0
SHEET 3 OF 3

STD. PLAN D80

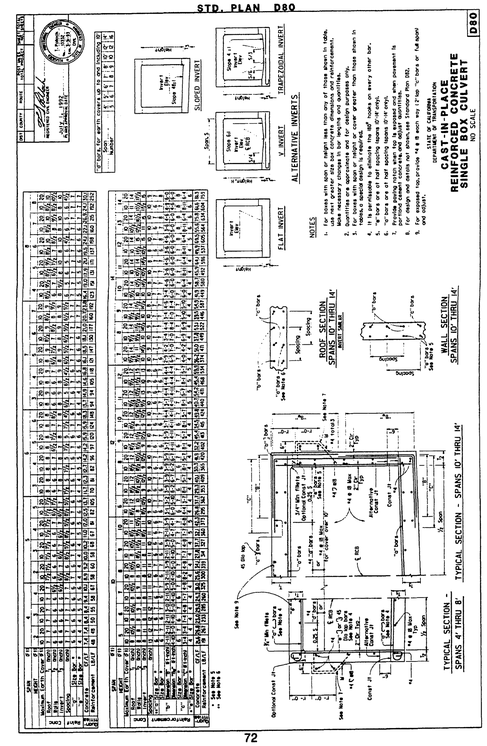

72

STD. PLAN D85

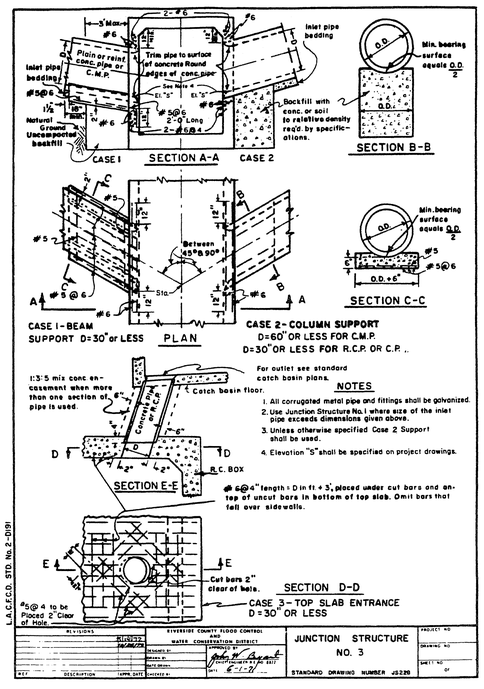

76

STD. PLAN D82

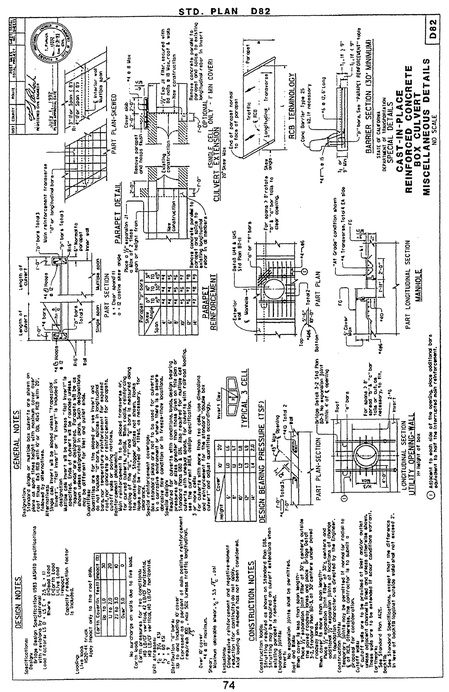

74

STD. PLAN D90

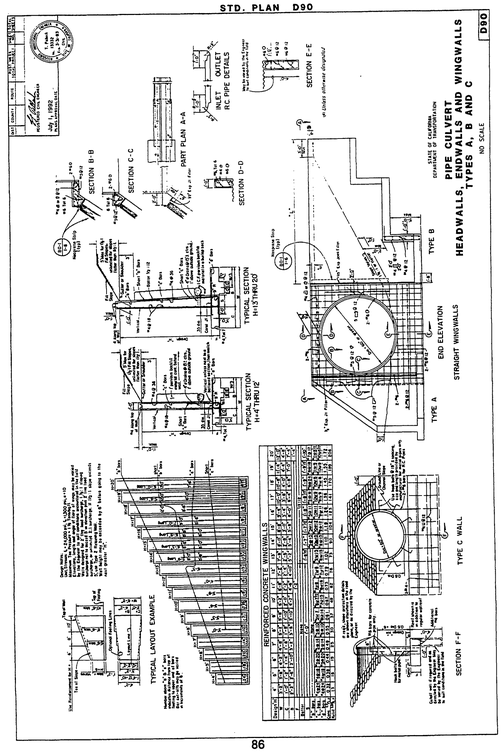

86

STD. PLAN D89

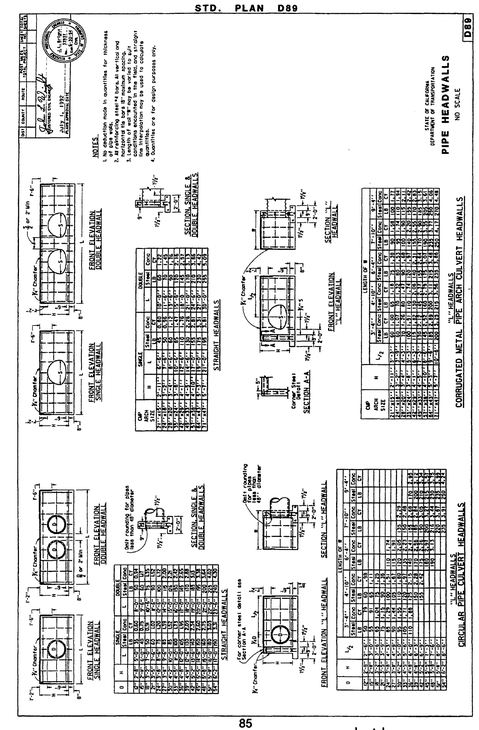

85

*AS-BUILT PER PLANS 10-27-05 4H

Underground Service Alert
CALL BEFORE YOU DIG
Call: TOLL FREE 1-800 227-2600
TWO WORKING DAYS BEFORE YOU DIG

PRIVATE ENGINEERING NOTE

CONSTRUCTION CONTRACTOR AGREES THAT IN ACCORDANCE WITH GENERALLY ACCEPTED CONSTRUCTION PRACTICES, CONSTRUCTION CONTRACTOR WILL BE REQUIRED TO ASSUME SOLE AND COMPLETE RESPONSIBILITY FOR JOB SITE CONDITIONS DURING THE COURSE OF CONSTRUCTION OF THE PROJECT, INCLUDING SAFETY OF ALL PERSONS AND PROPERTY; THAT THIS REQUIREMENT SHALL BE MADE TO APPLY CONTINUOUSLY AND NOT BE LIMITED TO NORMAL WORKING HOURS, AND CONSTRUCTION CONTRACTOR FURTHER AGREES TO DEFEND, INDEMNIFY AND HOLD DESIGN PROFESSIONAL HARMLESS FROM ANY AND ALL LIABILITY, REAL OR ALLEGED, IN CONNECTION WITH THE PERFORMANCE OF WORK ON THIS PROJECT, EXCEPTING LIABILITY ARISING FROM THE SOLE NEGLIGENCE OF DESIGN PROFESSIONAL.

BENCHMARK

RIVERSIDE COUNTY BENCHMARK, STAMPED V08-64 AT SOUTHWEST CORNER OF PLUMMER ROAD AND VAN BUREN BOULEVARD. 259.0 FEET SOUTH OF VAN BUREN BOULEVARD, 205.0 FEET WEST OF PLUMMER ROAD, ON THE TOP OF A 4.0 FOOT x 10.0 FOOT GRANITE BOULDER A BRASS DISK FLUSH AND MARKED. ELEV. 1638.14

REGISTERED PROFESSIONAL ENGINEER — Civil — Ned J. Araujo — No. 057835 — Exp. 6-30-02 — STATE OF CALIFORNIA

The Keith Companies TKC
22690 Cactus Avenue, Suite 300 Moreno Valley, CA 92553-9024 (909) 653-6224

APPROVED BY: NED J. ARAUJO R.C.E. NO. 57835
DATE: 5/26/00 REGISTRATION EXPIRES 06-30-02

MARK	REVISIONS:	APPR.	DATE

DESIGNED BY A.N. DRAWN BY A.N. CHECKED BY N.A.

CITY OF RIVERSIDE
PUBLIC WORKS DEPARTMENT

APPROVED BY	DATE	BY
PRINCIPAL ENGINEER	8/17/2000	
PARK DEPARTMENT		
TRAFFIC DIVISION		
P.W. ENGINEER MANAGER	8/16/00	
STREET SERVICES	8/26/00	

Richard McGrath
PUBLIC WORKS DIRECTOR
DATE 8-17-00

STORM DRAIN IMPROVEMENT PLANS
TRACT 28863 & 28866-3
STORM DRAIN FOR AREA A
DETAILS

HORIZ. SCALE: VERT. SCALE:

ACCOUNT NO. 31414.000
D-674
SHEET 5 OF 6

INDEXED 9-12-2000 4H

Plotted: 05/26/00 15:09:22 : N:\31414.000\dwg\storm drain\LINE-A\Prod-2886601.dwg

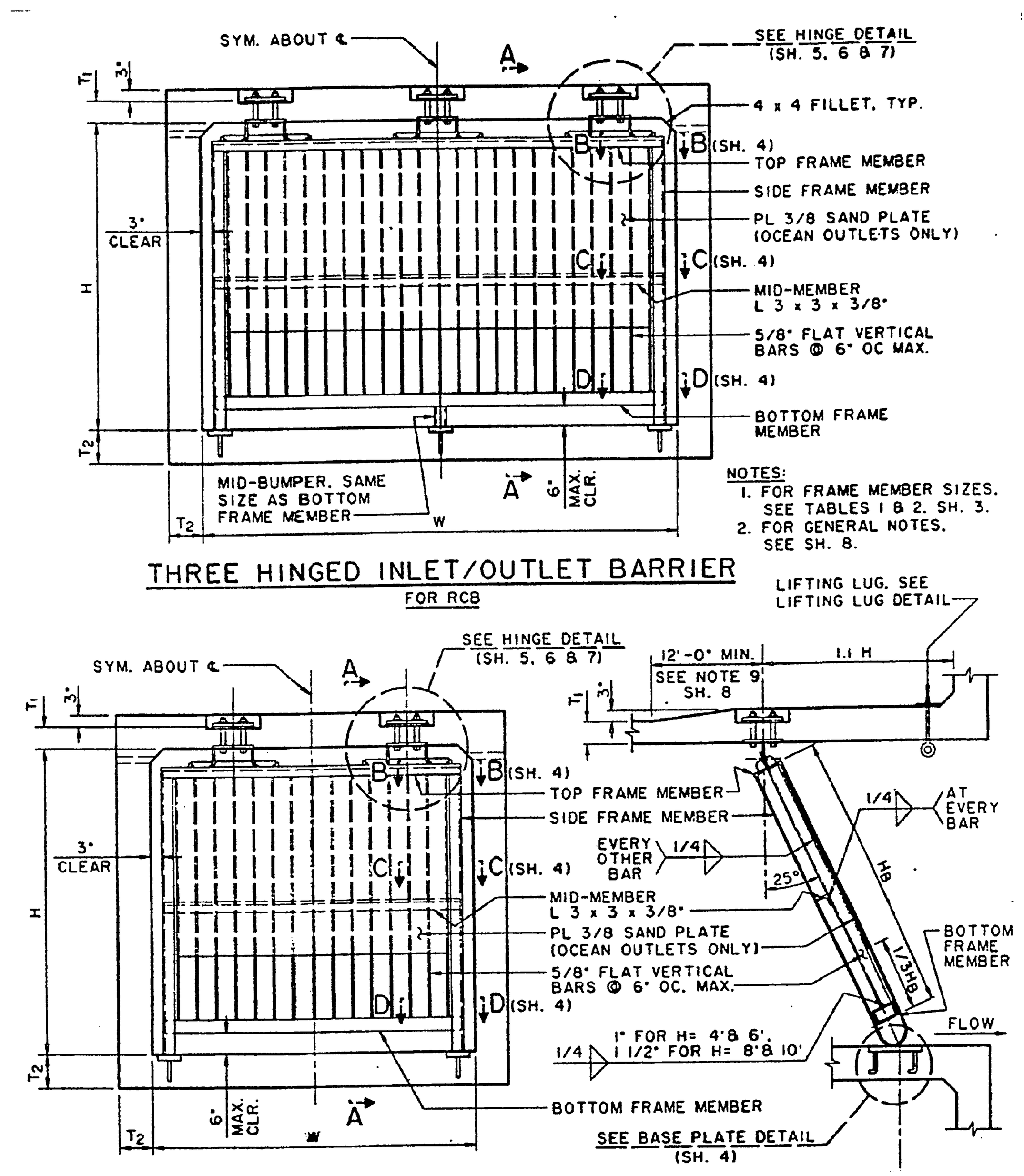

NOTES:
1. FOR FRAME MEMBER SIZES, SEE TABLES 1 & 2, SH. 3.
2. FOR GENERAL NOTES, SEE SH. 8.

THREE HINGED INLET/OUTLET BARRIER
FOR RCB

TWO HINGED INLET/OUTLET BARRIER
FOR RCB

SECTION A-A

NOTE:
FOR FRAME MEMBER SIZES, SEE TABLES 1 & 2, SH. 3.
FOR CONNECTION DETAILS, SEE SH. 4.

AMERICAN PUBLIC WORKS ASSOCIATION – SOUTHERN CALIFORNIA CHAPTER
PROMULGATED BY THE APWA-AGC JOINT COOPERATIVE COMMITTEE 1993
SLOPED PROTECTION BARRIER
USE WITH STANDARD SPECIFICATIONS FOR PUBLIC WORKS CONSTRUCTION
STANDARD PLAN 360-0 SHEET 1 OF 8

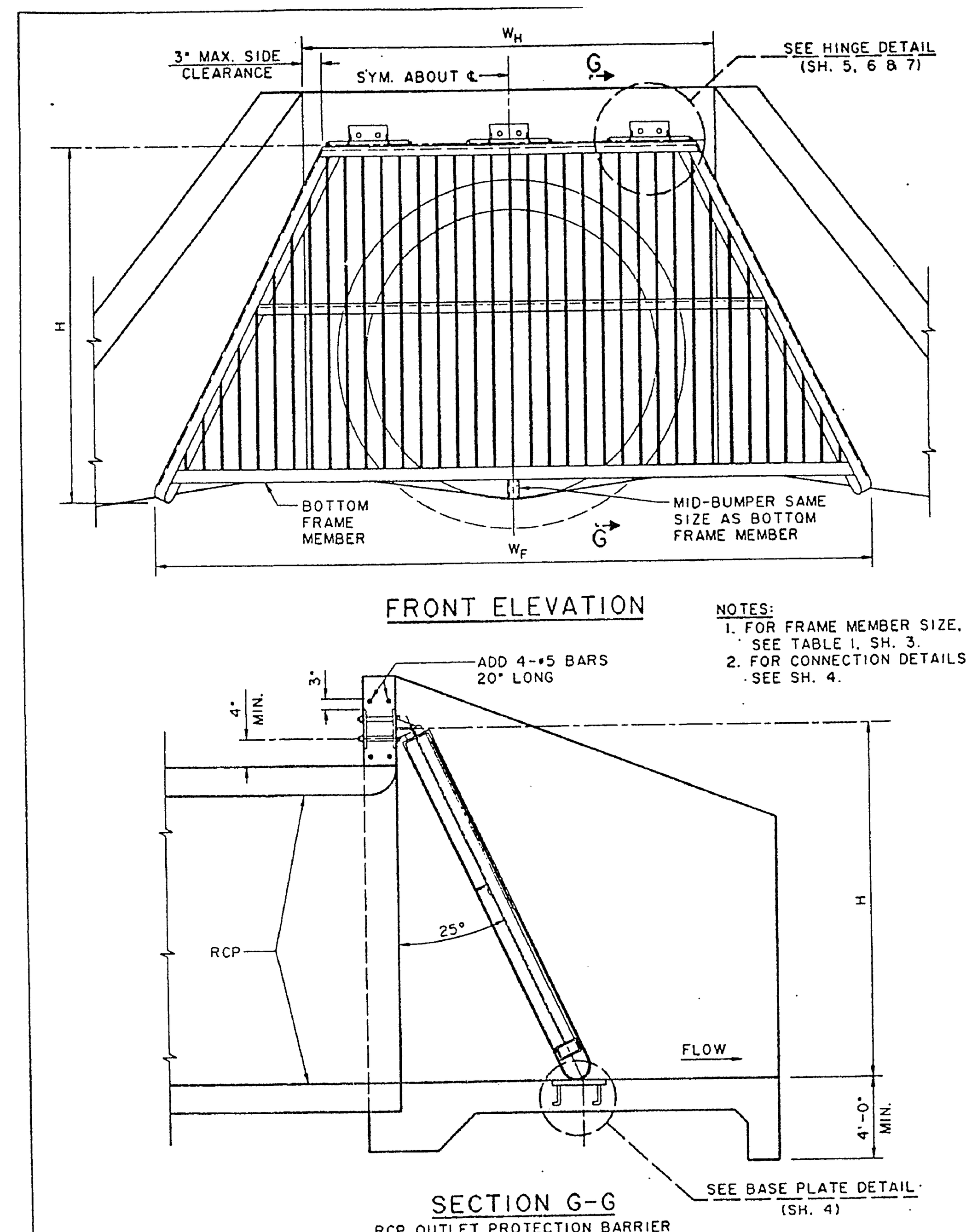

FRONT ELEVATION

NOTES:
1. FOR FRAME MEMBER SIZE, SEE TABLE 1, SH. 3.
2. FOR CONNECTION DETAILS SEE SH. 4.

SECTION G-G
RCP OUTLET PROTECTION BARRIER

AMERICAN PUBLIC WORKS ASSOCIATION – SOUTHERN CALIFORNIA CHAPTER
SLOPED PROTECTION BARRIER
STANDARD PLAN 360-0 SHEET 2 OF 8

TABLE 1: STANDARD INLET/OUTLET, BOX OR PIPE, RECTANGULAR OR TRAPEZOIDAL SHAPED PROTECTION BARRIERS.
NOTE 1: FOR TRAPEZOIDAL SHAPED PROTECTION BARRIERS, USE W_H TO DETERMINE NUMBER AND SIZE OF HINGES, AND USE W_F TO DETERMINE REQUIRED FRAME MEMBER SIZES. (FOR W_H AND W_F, SEE SH. 2)

TABLE 1: INLET/OUTLET SLOPED PROTECTION BARRIER

BOX SIZE W x H (FT.)	NO. OF HINGES	HINGE SIZE	VERTICAL BAR SIZE (INCHES)	TOP FRAME MEMBER SIZE	SIDE FRAME MEMBER SIZE	BOTTOM FRAME MEMBER SIZE
4x4	2	12"	1x1/2	C 4x7.25	C 4x7.25	TS 2x2x.250
4x6	2	12"	2x1/2	C 4x7.25	C 4x7.25	TS 2x2x.250
4x8	2	12"	3x1/2	C 5x9	C 5x9	TS 3x3x.250
6x4	2	18"	1x1/2	C 4x7.25	C 4x7.25	TS 2x2x.250
6x6	2	18"	2x1/2	C 4x7.25	C 4x7.25	TS 2.5x2.5x.250
6x8	2	18"	3x1/2	C 5x9	C 5x9	TS 3.5x3.5x.250
6x10	2	18"	4 1/2x1/2	C 6x10.5	C 6x10.5	TS 4.5x4.5x.250
8x4	3	12"	1x1/2	C 4x7.25	C 4x7.25	TS 2x2x.250
8x6	3	12"	2x1/2	C 4x7.25	C 4x7.25	TS 2.5x2.5x.250
8x8	3	12"	3x1/2	C 5x9	C 5x9	TS 3x3x.250
8x10	3	12"	4 1/2x1/2	C 6x10.5	C 6x10.5	TS 4.5x4.5x.250
10x6	3	18"	2x1/2	C 4x7.25	C 4x7.25	TS 2.5x2.5x.250
10x8	3	18"	3x1/2	C 5x9	C 5x9	TS 3.5x3.5x.250
10x10	3	18"	4 1/2x1/2	C 6x10.5	C 6x10.5	TS 4.5x4.5x.250
12x6	3	24"	2x1/2	C 5x9	C 5x9	TS 3x3x.250
12x8	3	24"	3x1/2	C 5x9	C 5x9	TS 3.5x3.5x.250
12x10	3	24"	4 1/2x1/2	C 6x10.5	C 6x10.5	TS 4.5x4.5x.250
14x6	3	24"	2x1/2	C 5x9	C 5x9	TS 3x3x.250
14x8	3	24"	3x1/2	C 6x10.5	C 6x10.5	TS 4x4x.250
14x10	3	24"	4 1/2x1/2	C 7x12.25	C 7x12.25	TS 5x5x.250

TABLE 2: BOX OCEAN OUTLET PROTECTION BARRIERS WITH OR WITHOUT SAND BARRIER PLATE.

TABLE 2: OCEAN OUTLET SLOPED PROTECTION BARRIER

BOX SIZE W x H (FT.)	NO. OF HINGES	HINGE SIZE	VERTICAL BAR SIZE (INCHES)	TOP FRAME MEMBER SIZE	SIDE FRAME MEMBER SIZE	BOTTOM FRAME MEMBER SIZE
4x4	2	12"	2 1/2x5/8	C 5x9	C 5x9	TS 3x3x.250
4x6	2	12"	3 3/4x5/8	C 6x13	C 6x8.2	TS 4x2x.313
4x8	2	12"	5 1/4x5/8	C 8x18.75	C 8x11.5	TS 6x2x.250
6x4	2	18"	2 1/2x5/8	C 6x13	C 6x8.2	TS 4x3x.313
6x6	2	18"	3 3/4x5/8	C 6x13	C 6x8.2	TS 4x4x.500
6x8	2	18"	5 1/4x5/8	C 8x18.75	C 8x11.5	TS 6x4x.375
6x10	2	18"	6 1/2x5/8	C 9x20	C 9x13.4	TS 7x4x.375
8x4	3	12"	2 1/2x5/8	C 5x9	C 5x9	TS 3x3x.250
8x6	3	12"	3 3/4x5/8	C 6x13	C 6x8.2	TS 4x3x.250
8x8	3	12"	5 1/4x5/8	C 8x18.75	C 8x11.5	TS 6x2x.250
8x10	3	12"	6 1/2x5/8	C 9x20	C 9x13.4	TS 7x3x.250
10x6	3	18"	3 3/4x5/8	C 6x13	C 6x8.2	TS 4x4x.313
10x8	3	18"	5 1/4x5/8	C 8x18.75	C 8x11.5	TS 6x4x.313
10x10	3	18"	6 1/2x5/8	C 9x20	C 9x13.4	TS 7x3x.313
12x6	3	24"	3 3/4x5/8	C 7x14.75	C 7x9.8	TS 5x4x.313
12x8	3	24"	5 1/4x5/8	C 8x18.75	C 8x11.5	TS 6x4x.375
12x10	3	24"	6 1/2x5/8	C 9x20	C 9x13.4	TS 7x4x.375
14x6	3	24"	3 3/4x5/8	C 8x18.75	C 8x11.5	TS 6x4x.375
14x8	3	24"	5 1/4x5/8	C 8x18.75	C 8x11.5	TS 6x6x.375
14x10	3	24"	6 1/2x5/8	C 9x20	C 9x13.4	TS 7x5x.500

AMERICAN PUBLIC WORKS ASSOCIATION – SOUTHERN CALIFORNIA CHAPTER
SLOPED PROTECTION BARRIER
STANDARD PLAN 360-0 SHEET 3 OF 8

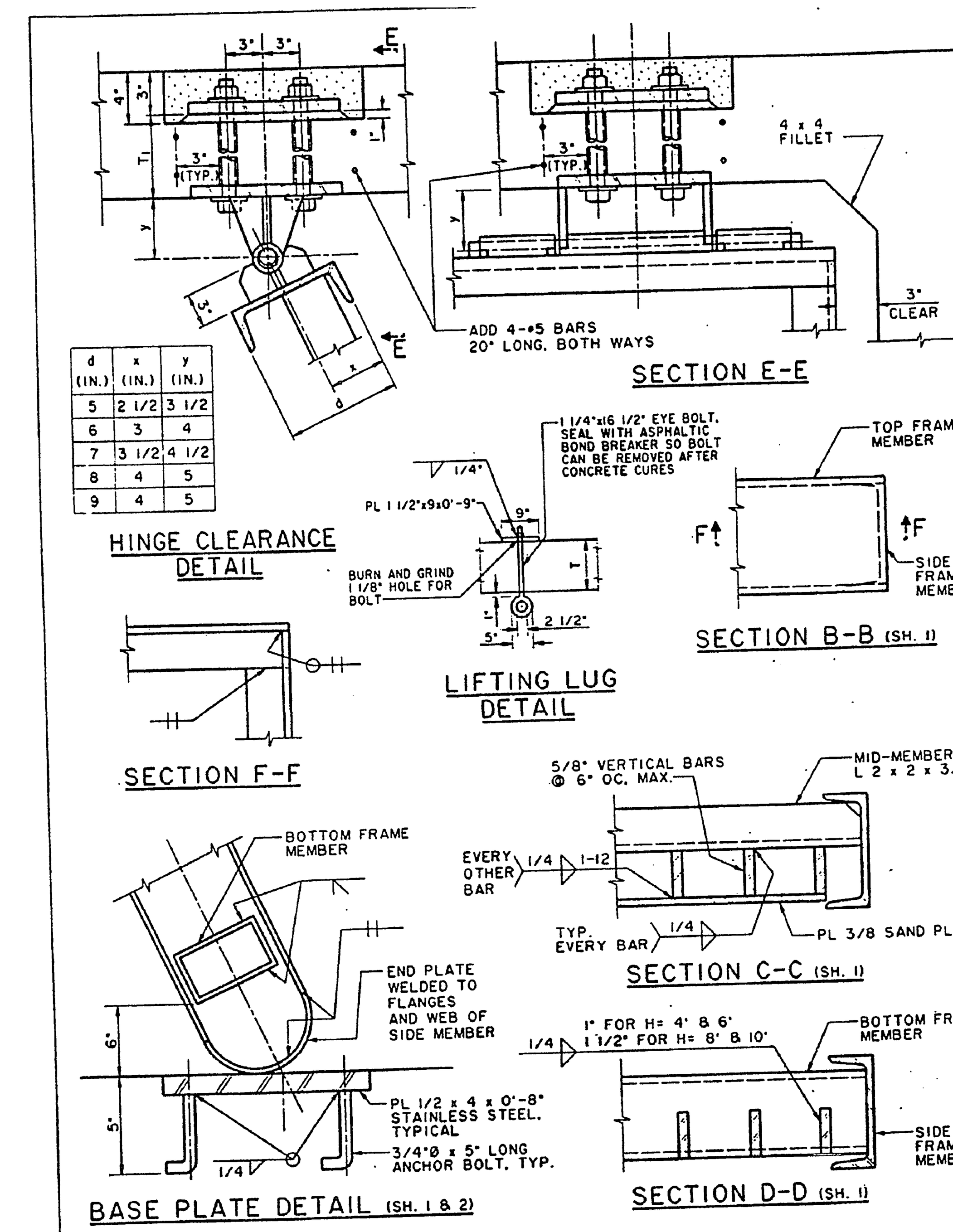

d (IN.)	x (IN.)	y (IN.)
5	2 1/2	3 1/2
6	3	4
7	3 1/2	4 1/2
8	4	5
9	4	5

HINGE CLEARANCE DETAIL

SECTION E-E

LIFTING LUG DETAIL

SECTION B-B (SH. 1)

SECTION F-F

SECTION C-C (SH. 1)

BASE PLATE DETAIL (SH. 1 & 2)

SECTION D-D (SH. 1)

AMERICAN PUBLIC WORKS ASSOCIATION – SOUTHERN CALIFORNIA CHAPTER
SLOPED PROTECTION BARRIER
STANDARD PLAN 360-0 SHEET 4 OF 8

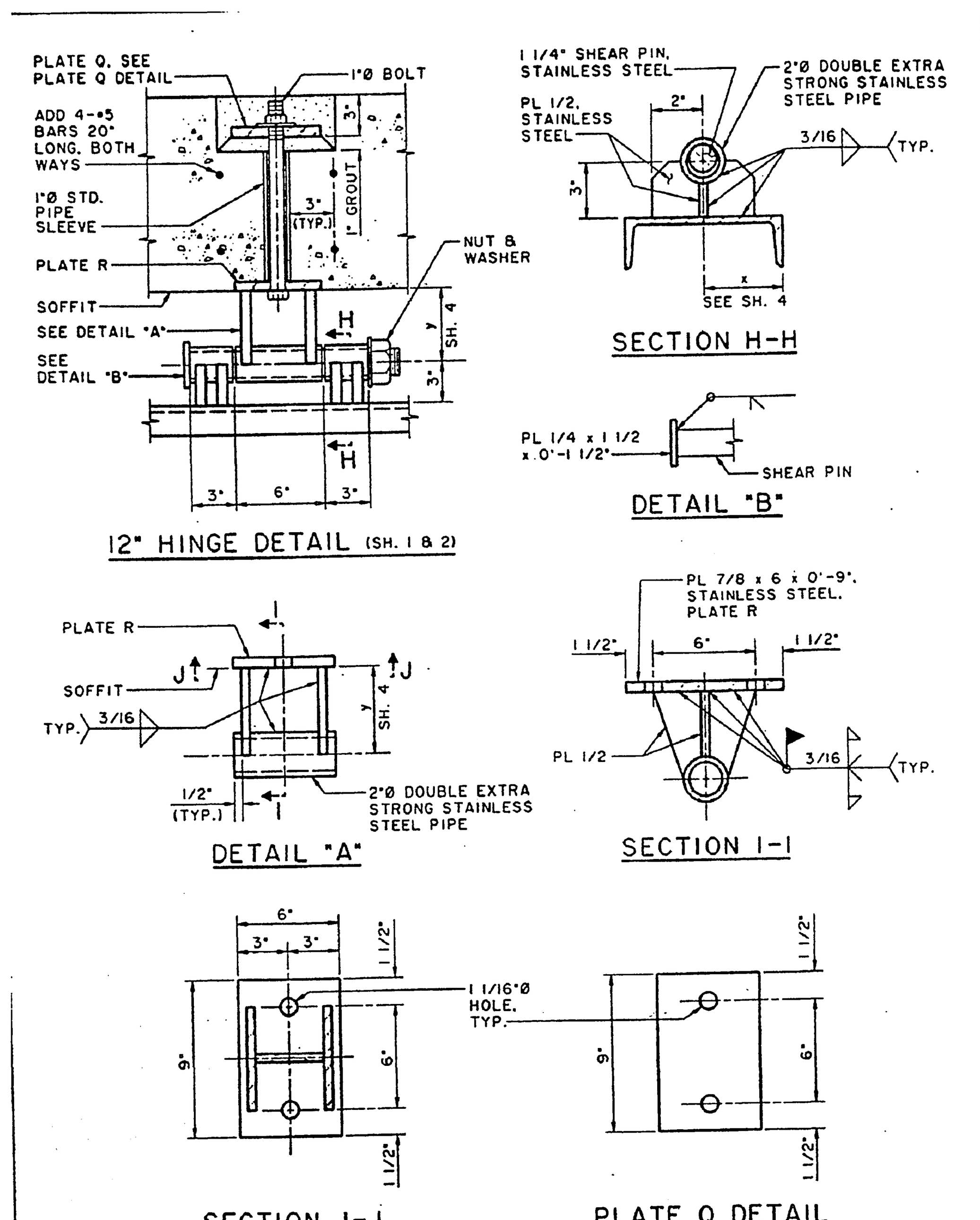

12" HINGE DETAIL (SH. 1 & 2)

SECTION H-H

DETAIL "B"

DETAIL "A"

SECTION I-I

SECTION J-J

PLATE Q DETAIL

AMERICAN PUBLIC WORKS ASSOCIATION – SOUTHERN CALIFORNIA CHAPTER
SLOPED PROTECTION BARRIER
STANDARD PLAN 360-0 SHEET 5 OF 8

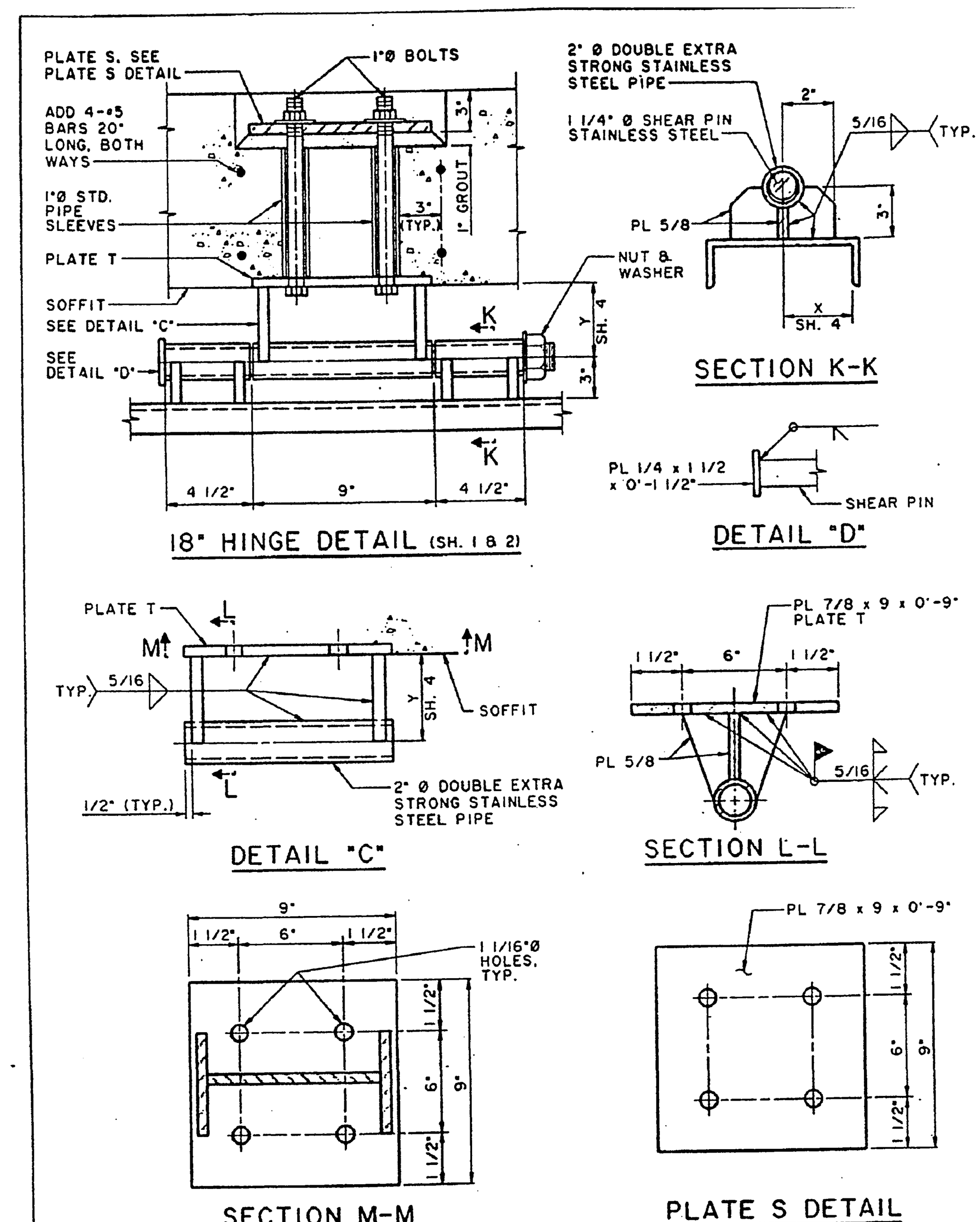

18" HINGE DETAIL (SH. 1 & 2)

SECTION K-K

DETAIL "D"

DETAIL "C"

SECTION L-L

SECTION M-M

PLATE S DETAIL

AMERICAN PUBLIC WORKS ASSOCIATION – SOUTHERN CALIFORNIA CHAPTER
SLOPED PROTECTION BARRIER
STANDARD PLAN 360-0 SHEET 6 OF 8

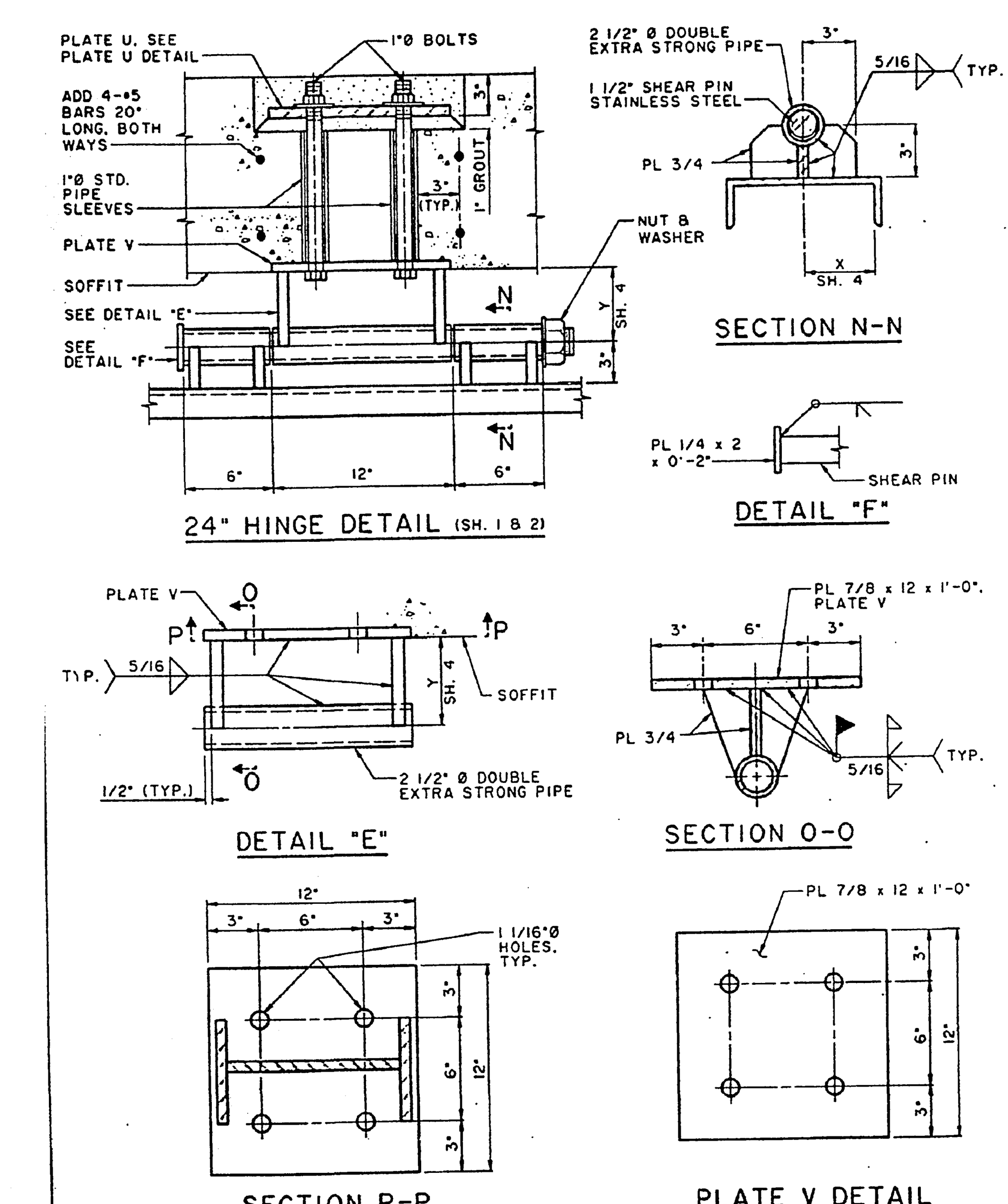

24" HINGE DETAIL (SH. 1 & 2)

SECTION N-N

DETAIL "F"

DETAIL "E"

SECTION O-O

SECTION P-P

PLATE V DETAIL

AMERICAN PUBLIC WORKS ASSOCIATION – SOUTHERN CALIFORNIA CHAPTER
SLOPED PROTECTION BARRIER
STANDARD PLAN 360-0 SHEET 7 OF 8

NOTES
1. WHENEVER RCB SIZE FALLS BETWEEN SIZES SHOWN ON THE TABLE, THE NEXT LARGER SIZE SHALL BE USED.
2. ALL FRAME MEMBERS SHALL BE ASTM A 36 STEEL OR BETTER.
3. ALL HINGE ASSEMBLIES AND BASE PLATES SHALL BE STAINLESS STEEL.
4. THE CONTRACTOR SHALL MAKE ANY NECESSARY MODIFICATIONS TO ALLOW FOR THE SIMPLE REMOVAL OR INSERTION OF HINGE PINS IN ORDER TO INSTALL OR REMOVE THE PROTECTION BARRIER. ENDS OF HINGE PINS SHALL BE THREADED IN ORDER THAT NUTS AND LOCK WASHERS WILL BE FLUSH WITH THE HINGE PIPE. THREADS BEYOND THE NUT FACE SHALL BE DAMAGED TO PREVENT REMOVAL.
5. ALL FRAME MEMBERS SHALL BE GALVANIZED AFTER FABRICATION.
6. IF FIELD WELDS ARE NECESSARY, GALVICON, GALVALLOY OR AGENCY APPROVED EQUAL SHALL BE USED FOR COATING.
7. MID-BUMPER SHALL BE USED FOR 3 HINGED BARRIERS.
8. ANY DEVIATIONS OR MODIFICATIONS TO THIS STANDARD SHALL BE APPROVED BY THE AGENCY.
9. AT OCEAN OUTLETS OR WHEREVER THE TOP SLAB SERVES AS A PUBLIC WALKWAY, THE TOP SLAB THICKNESS SHALL BE INCREASED BY 3" IN ORDER TO PROVIDE A RECESS FOR THE HINGE TOP PLATE. THE RECESS SHALL BE BACKFILLED WITH GROUT AND SMOOTHED AS SHOWN.
10. PROTECTION BARRIERS FOR RCB CONDUITS SHALL BE SLOPED TO SWING OPEN IN THE DIRECTION OF FLOW.
11. MEMBERS SHALL BE SELECTED FROM TABLE 1 UNLESS OTHERWISE NOTED.
12. DESIGN LOADS:
   A. INLET/OUTLET: BULKED EFD = 85 PCF
   B. OCEAN OUTLETS:
      1. 1800 PSF @ SAND PLATE AREA
      2. 600 PSF @ LOWER OPEN AREA

AMERICAN PUBLIC WORKS ASSOCIATION – SOUTHERN CALIFORNIA CHAPTER
SLOPED PROTECTION BARRIER
STANDARD PLAN 360-0 SHEET 8 OF 8

*AS-BUILT PER PLANS 10-27-05 LH

CALL BEFORE YOU DIG
Underground Service Alert
Call: TOLL FREE
1-800
227-2600
TWO WORKING DAYS BEFORE YOU DIG

PRIVATE ENGINEERING NOTE
CONSTRUCTION CONTRACTOR AGREES THAT IN ACCORDANCE WITH GENERALLY ACCEPTED CONSTRUCTION PRACTICES, CONSTRUCTION CONTRACTOR WILL BE REQUIRED TO ASSUME SOLE AND COMPLETE RESPONSIBILITY FOR JOB SITE CONDITIONS DURING THE COURSE OF CONSTRUCTION OF THE PROJECT, INCLUDING SAFETY OF ALL PERSONS AND PROPERTY; THAT THIS REQUIREMENT SHALL BE MADE TO APPLY CONTINUOUSLY AND NOT BE LIMITED TO NORMAL WORKING HOURS, AND CONSTRUCTION CONTRACTOR FURTHER AGREES TO DEFEND, INDEMNIFY AND HOLD DESIGN PROFESSIONAL HARMLESS FROM ANY AND ALL LIABILITY, REAL OR ALLEGED, IN CONNECTION WITH THE PERFORMANCE OF WORK ON THIS PROJECT, EXCEPTING LIABILITY ARISING FROM THE SOLE NEGLIGENCE OF DESIGN PROFESSIONAL.

BENCHMARK
RIVERSIDE COUNTY BENCHMARK, STAMPED VB8-64 AT SOUTHWEST CORNER OF PLUMMER ROAD AND VAN BUREN BOULEVARD. 259.0 FEET SOUTH OF VAN BUREN BOULEVARD. 205.0 FEET WEST OF PLUMMER ROAD, ON THE TOP OF A 4.0 FOOT x 10.0 FOOT GRANITE BOULDER A BRASS DISK FLUSH AND MARKED.
ELEV. 1638.14

REGISTERED PROFESSIONAL ENGINEER
Civil
Ned J. Araujo
No. 057835
Exp. 6-30-02
STATE OF CALIFORNIA

The Keith Companies TKC
22690 Cactus Avenue, Suite 300 Moreno Valley, CA 92553-9024 (909) 653-0234

APPROVED BY: [signature]
DATE: 5/26/00
NED J. ARAUJO R.C.E. NO. 57835
REGISTRATION EXPIRES 06-30-02

MARK	REVISIONS:	APPR.	DATE

DESIGNED BY A.N. DRAWN BY A.A.N. CHECKED BY N.A.

CITY OF RIVERSIDE
PUBLIC WORKS DEPARTMENT

APPROVED BY	DATE	BY
PRINCIPAL ENGINEER	8/15/2000	[initials]
PARK DEPARTMENT		
TRAFFIC DIVISION		
P.W. ENGR. MANAGER	8/4/00	TOB
STREET SERVICES	6/26/0	[initials]

Richard McGrath
PUBLIC WORKS DIRECTOR
DATE 8-17-00

STORM DRAIN IMPROVEMENT PLANS
TRACT 28863 & 28866-3
STORM DRAIN FOR AREA A
DETAILS

HORIZ. SCALE: 1"= 40' VERT. SCALE: 1"= 4'

ACCOUNT NO. 31414.000
D-674
SHEET 6 OF 6

INDEXED 9-12-2000 LH

Plotted: 05/26/00 15:07:46 : N:\31414.000\dwg\storm drain\LINE-A\PRSD-DET2.dwg

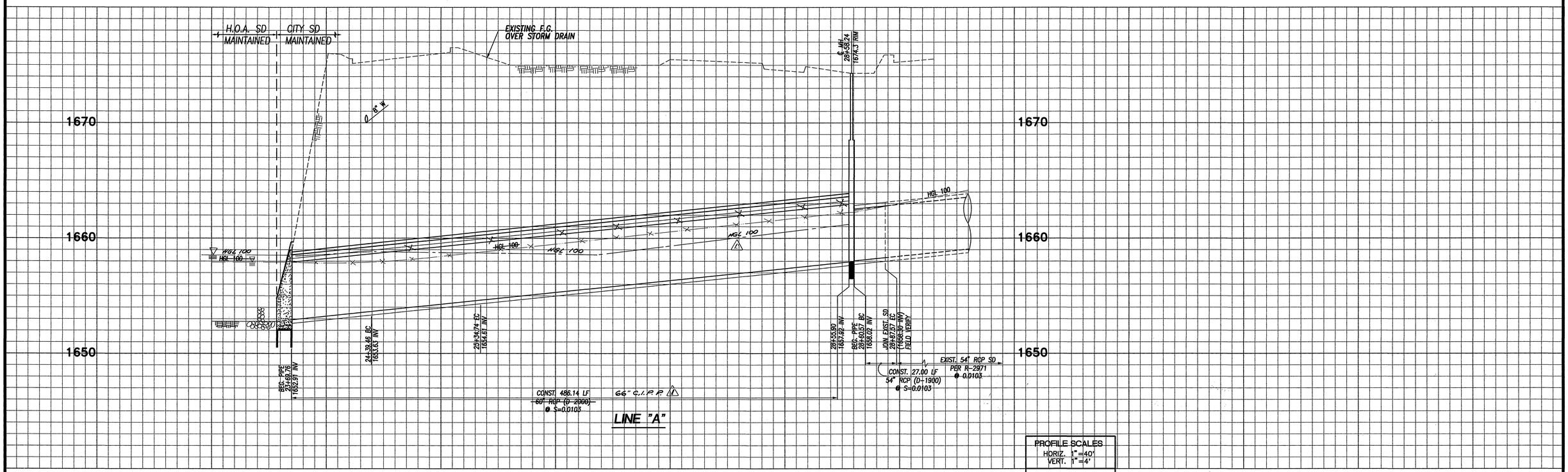

PROFILE SCALES
HORIZ. 1"=40'
VERT. 1"=4'
PLAN SCALE 1"=40'

SCALE 1"=40'

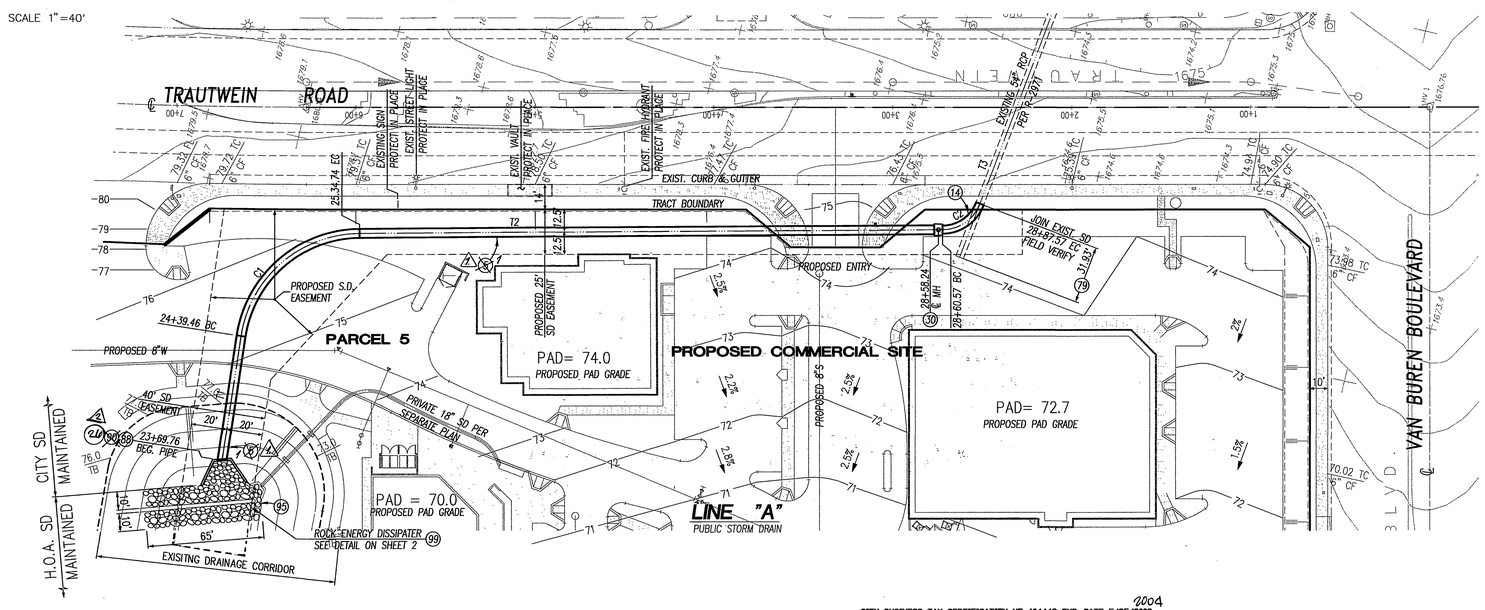

HYDRAULIC DATA

LINE	STATION TO STATION	DIA. (in)	Q100 (cfs)	n	SLOPE (ft/ft)	dn (ft)	Vn (fps)	Vcr (fps)	dcr (ft)	sf (ft/ft)	V (fps)
~~"A"~~	~~23+69.76 TO 28+55.90~~	~~60~~	~~249~~	~~0.013~~	~~0.0103~~	~~3.9~~	~~15.3~~	~~13.6~~	~~4.4~~	–	–
"A"	28+60.57 TO 28+87.57	54	249	0.013	0.0103	PRESSURE FLOW				0.014	15.7
1 "A"	23+69.70 TO 28+55.90	66	249	0.015	0.0103	3.9	13.9	12.2	4.4		

CONSTRUCTION NOTES

1 (5) ~~CONSTRUCT 60" RCP (D-LOAD PER PLAN)~~
(14) CONSTRUCT 54" RCP (D-LOAD PER PLAN)
(30) CONSTRUCT MANHOLE AX PER CITY STD. 430
(79) REMOVE & DISPOSE PORTION OF EXIST. 54" RCP SD
(88) CONSTRUCT HEADWALL PER CALTRANS STD. D90, SEE SHEET 5
(90) CONSTRUCT TRASH RACK PER APWA STD. 360-0, SEE SHEET 6
(95) CONSTRUCT GROUTED RIP-RAP (D50=150 LBS. (34") 51" THICK)
(99) INSTALL COCONUT FIBER EROSION BLANKET TYPE C125 BN PER NORTH AMERICAN GREEN SPECIFICATIONS, OR APPROVED EQUAL
1 (1) CONSTRUCT 66" C.I.P.P.
2 (2L) CONSTRUCT PROTECTION BARRIER PER LOS ANGELES FLOOD CONTROL DISTRICT DWG. # 2-D261.1, SHOWN ON SHEET 2B

COURSE DATA		
LINE	BEARING	DISTANCE
T1	N85°39'06"E	69.70'
T2	N13°28'15"W	325.83'
T3	N82°14'11"W	–

CURVE TABLE				
#	Δ	R	L	T
C1	80°52'39"	67.50'	95.28'	57.53'
C2	68°45'51"	22.50'	27.00'	15.40'

CITY BUSINESS TAX CERTIFICATION NO. 104442 EXP. DATE 5/25/~~2002~~ 2004

*AS-BUILT PER PLANS 10-27-05 KH

CALL BEFORE YOU DIG — TWO WORKING DAYS BEFORE YOU DIG

Underground Service Alert
Call: TOLL FREE
1-800 227-2600

PRIVATE ENGINEERING NOTE

CONSTRUCTION CONTRACTOR AGREES THAT IN ACCORDANCE WITH GENERALLY ACCEPTED CONSTRUCTION PRACTICES, CONSTRUCTION CONTRACTOR WILL BE REQUIRED TO ASSUME SOLE AND COMPLETE RESPONSIBILITY FOR JOB SITE CONDITIONS DURING THE COURSE OF CONSTRUCTION OF THE PROJECT, INCLUDING SAFETY OF ALL PERSONS AND PROPERTY; THAT THIS REQUIREMENT SHALL BE MADE TO APPLY CONTINUOUSLY AND NOT BE LIMITED TO NORMAL WORKING HOURS, AND CONSTRUCTION CONTRACTOR FURTHER AGREES TO DEFEND, INDEMNIFY AND HOLD DESIGN PROFESSIONAL HARMLESS FROM ANY AND ALL LIABILITY, REAL OR ALLEGED, IN CONNECTION WITH THE PERFORMANCE OF WORK ON THIS PROJECT, EXCEPTING LIABILITY ARISING FROM THE SOLE NEGLIGENCE OF DESIGN PROFESSIONAL.

BENCHMARK

RIVERSIDE COUNTY BENCHMARK, STAMPED VB8-64 AT S.W. COR. OF PLUMMER RD. AND VAN BUREN BLVD. 259.0 FT. SO. OF VAN BUREN BLVD. 205.0 FT. W. OF PLUMMER RD., ON THE TOP OF A 4.0 FT. x 10.0 FT. GRANITE BOULDER A BRASS DISK FLUSH AND MARKED.

ELEV. 1638.123

REGISTERED PROFESSIONAL ENGINEER TREVOR S. DODSON No. 42029 Exp. 3-31-2004 CIVIL STATE OF CALIFORNIA

PLANS PREPARED BY:

MDS CONSULTING
PLANNERS ENGINEERS SURVEYORS
MORSE DOKICH SCHULTZ
17320 Redhill Ave. Suite 350 Irvine, CA 92614
Voice: 949-251-8821 FAX: 949-251-0516

PLANS PREPARED UNDER THE SUPERVISION OF:
TREVOR S. DODSON R.C.E. NO.42029 DATE 4/29/02

MARK	REVISIONS	APPR.	DATE
2	REV. CONST. NOTE - PROTECTION BARRIER	RVZ	7-10-03
1	CONST. 66" C.I.P.P. IN LIEU OF 60" RCP	RVZ	9-3-02

DESIGNED BY DRAWN BY CHECKED BY

CITY OF RIVERSIDE
PUBLIC WORKS DEPARTMENT

	APPROVED BY	DATE	BY
PRINCIPAL ENGINEER		5/28/02	
PARK DEPARTMENT		–	–
TRAFFIC DIVISION		–	–
DEPUTY P.W. DIRECTOR			
STREET SERVICES		5/11/02	

PUBLIC WORKS DIRECTOR
DATE 5/28/02

STORM DRAIN IMPROVEMENT PLANS
TRACT 28863
LINE "A"
PLAN AND PROFILE

HORIZ. SCALE: 40' VERT. SCALE: 1"=4'

ACCOUNT NO. 31414.000

D-674

SHEET 2A OF 6

I:\52600\IMPLANS\sd49public.dwg 4/29/02

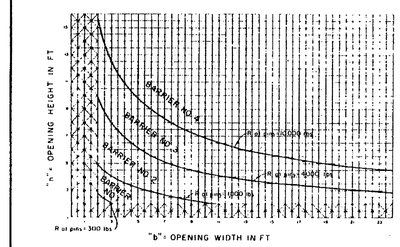

The curves represent reactions at the shear pins due to hydrostatic head on the debris-obstructed barriers.
The height and width of the openings determines which barrier (see sheet 3), numbers 1, 2, or 3 between the curves, or number 4 beyond the curves, is to be used.
For sizes of openings falling within the crosshatched area, and if approved by the District, protection bars shall be placed in accordance with District Std. Dwg 2-D175 with the bars positioned horizontally at 6 1/2" c.c.

Note: Barrier number shall be specified on project drawings.

REVISIONS		
MARK	DATE	DESCRIPTION

SUPERSEDES DRAWING 2-D261 DATED SEPT., 1959

LOS ANGELES COUNTY FLOOD CONTROL DISTRICT
PROTECTION BARRIER
DESIGN CHART

SCALE NONE | DATE JAN 10, '67 | DWG. NO. 2-D261 | SHEET 1 OF 3

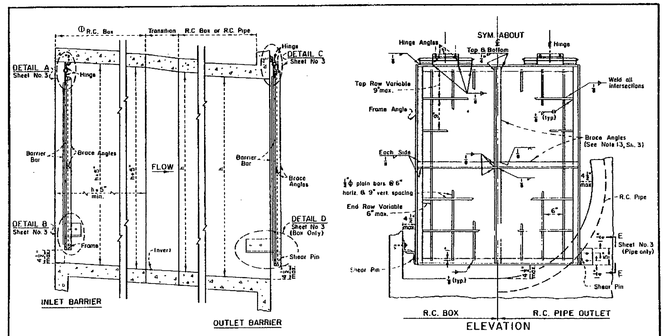

SECTION ALONG ℄

NOTE: For Protection Barrier member sizes, see Sheet 3.
① Structural Design Details of R.C. Box containing Inlet Barrier shall be delineated on the Project Drawings.

REVISIONS		
MARK	DATE	DESCRIPTION
①	6-29-67	Revised

SUPERSEDES DRAWING 2-D261 DATED SEPT. 1959

LOS ANGELES COUNTY FLOOD CONTROL DISTRICT
PROTECTION BARRIER
SECTION AND ELEVATION

SCALE NONE | DATE JAN 10, '67 | DWG. NO. 2-D261 2 | SHEET 2 OF 3

GENERAL NOTES:
1. Angles connected with shear pins shall fit snugly and truly face to face.
2. The shear pin holes shall be drilled so as to provide a tight fit with the shear pins in place.
3. All shear pins shall be peened on both ends after installation.
4. The aluminum shear pin material will be furnished by the District to the Contractor.
5. All 5/8-inch diameter bolt holes shall be drilled on the gage lines of the angles.
6. All bolts shall be 5/8-inch in diameter embedded a minimum of 4 inches into concrete, or equivalent expansion bolts, and shall be furnished with hex nuts and metallic washers at least 3/32-inch thick.
7. Frame, brace, and hinge angles shall have the outstanding legs facing in the direction of flow for both inlets and outlets, see Section Sheet 2.
8. Thread ends of hinge pin so that nuts and lock washers will be flush with the hinge angle. Damage threads beyond the nut face. Use bolt stock for pin.
9. Galvanize all ferrous parts after fabrication.
10. Cover all movable contact surfaces with a coat of waterproof grease prior to installation.
11. For barriers 36 inches and less in width, use one hinge the full width of barrier.
12. If the barrier width exceeds 12 feet, provide an additional hinge on the centerline of the barrier.
13. For barriers exceeding 6 feet in height or width, use brace angles evenly spaced at a maximum of 6 feet on center.
14. Shear pin material shall be commercially pure aluminum wire, alloy 1100, temper O, Federal Specification QQ-A-411.
15. ⓪ Refer to part J of the specifications for additional requirements and material specifications.

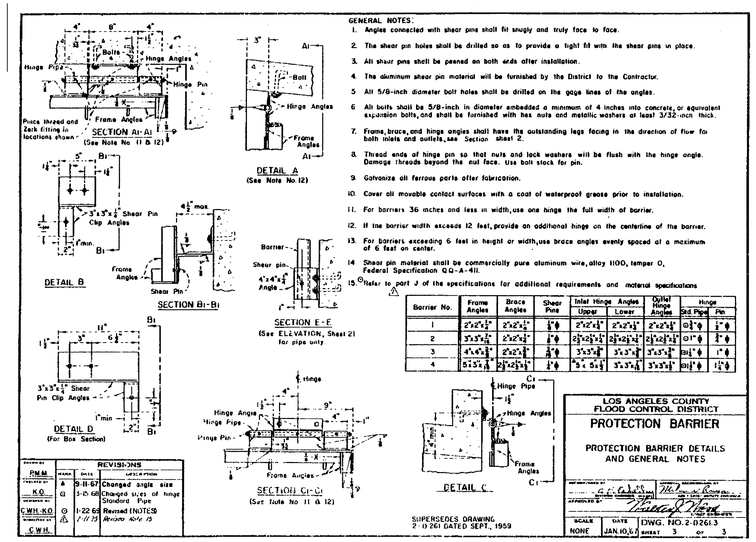

Barrier No.	Frame Angles	Brace Angles	Shear Pins	Inlet Hinge Angles Upper	Inlet Hinge Angles Lower	Outlet Hinge Angles	Hinge Std. Pipe	Hinge Pin
1	2"x2"x1/4"	2"x2"x1/4"	1/2" ϕ	2"x2"x1/4"	2"x2"x1/4"	2"x2"x1/4"	0-2" ϕ	1" ϕ
2	3"x3"x1/4"	2"x2"x1/4"	1/2" ϕ	2"x2"x1/4"	2"x2"x1/4"	2"x2"x1/4"	0-1" ϕ	1" ϕ
3	4"x4"x1/4"	2"x2"x1/4"	1/2" ϕ	3"x3"x1/4"	3"x3"x1/4"	3"x3"x1/4"	0-1" ϕ	1" ϕ
4	5"x5"x1/4"	2"x2"x1/4"	5/8" ϕ	4"x4"x1/4"	3"x3"x1/4"	3"x3"x1/4"	0-1" ϕ	1 1/2" ϕ

REVISIONS			
MARK	DATE	DESCRIPTION	
A	9-11-67	Changed angle size	
①	3-10-68	Changed size of hinge Standard Pipe	
①	1-22-69	Revised (NOTES)	
⚠	7-17-73	Revised Note 15	

SUPERSEDES DRAWING 2-D261 DATED SEPT., 1959

LOS ANGELES COUNTY FLOOD CONTROL DISTRICT
PROTECTION BARRIER
PROTECTION BARRIER DETAILS AND GENERAL NOTES

SCALE NONE | DATE JAN 10, '67 | DWG. NO. 2-D261.3 | SHEET 3 OF 3

PROTECTION BARRIER DETAIL

PER LOS ANGELES FLOOD CONTROL DISTRICT DWG. NO. 2-D261.1
NOT TO SCALE

*AS-BUILT PER PLANS 10-27-05 KH

Underground Service Alert
Call: TOLL FREE
1-800 227-2600
TWO WORKING DAYS BEFORE YOU DIG

PRIVATE ENGINEERING NOTE

CONSTRUCTION CONTRACTOR AGREES THAT IN ACCORDANCE WITH GENERALLY ACCEPTED CONSTRUCTION PRACTICES, CONSTRUCTION CONTRACTOR WILL BE REQUIRED TO ASSUME SOLE AND COMPLETE RESPONSIBILITY FOR JOB SITE CONDITIONS DURING THE COURSE OF CONSTRUCTION OF THE PROJECT, INCLUDING SAFETY OF ALL PERSONS AND PROPERTY; THAT THIS REQUIREMENT SHALL BE MADE TO APPLY CONTINUOUSLY AND NOT BE LIMITED TO NORMAL WORKING HOURS, AND CONSTRUCTION CONTRACTOR FURTHER AGREES TO DEFEND, INDEMNIFY AND HOLD DESIGN PROFESSIONAL HARMLESS FROM ANY AND ALL LIABILITY, REAL OR ALLEGED, IN CONNECTION WITH THE PERFORMANCE OF WORK ON THIS PROJECT, EXCEPTING LIABILITY ARISING FROM THE SOLE NEGLIGENCE OF DESIGN PROFESSIONAL.

BENCHMARK

RIVERSIDE COUNTY BENCHMARK, STAMPED VBB-64 AT S.W. COR. OF PLUMMER RD. AND VAN BUREN BLVD. 259.0 FT. SO. OF VAN BUREN BLVD. 205.0 FT. W. OF PLUMMER RD., ON THE TOP OF A 4.0 FT. x 10.0 FT. GRANITE BOULDER A BRASS DISK FLUSH AND MARKED.

ELEV. 1638.123

REGISTERED PROFESSIONAL ENGINEER TREVOR S. DODSON No. 42029 Exp. 3-31-2004 CIVIL STATE OF CALIFORNIA

PLANS PREPARED BY:
MDS CONSULTING
PLANNERS ENGINEERS SURVEYORS
MORSE DOKICH SCHULTZ
17320 Redhill Ave. Suite 350 Irvine, CA 92614 Voice: 949-251-8821 FAX: 949-251-0516

PLANS PREPARED UNDER THE SUPERVISION OF:
TREVOR S. DODSON R.C.E. NO.42029 | 6-2-03 DATE

MARK	REVISIONS	APPR.	DATE
1	ADDED SHEET 2B (DETAIL)	KVZ	7-10-03

DESIGNED BY | DRAWN BY | CHECKED BY

CITY OF RIVERSIDE
PUBLIC WORKS DEPARTMENT

	DATE	BY
APPROVED BY		
PRINCIPAL ENGINEER	7/8/03	
PARK DEPARTMENT	–	–
TRAFFIC DIVISION	–	–
STREET SERVICES	–	–

CITY ENGINEER
DATE 7/8/03

STORM DRAIN IMPROVEMENT PLANS
TRACT 28863
LINE "A"
DETAIL

HORIZ. SCALE: 40' | VERT. SCALE: 1"=4'

ACCOUNT NO. D-674
SHEET 2B OF 6

I:\52600\IMPLANS\sd2B\public.dwg 6/02/03