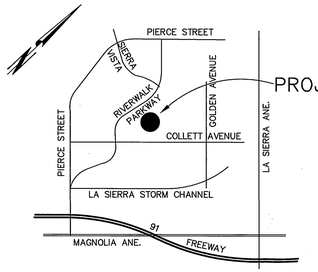

VICINITY MAP

N.T.S.

CONSTRUCTION NOTES

	CONSTRUCTION NOTES	QUANTITIES
1	CONSTRUCT 24" RCP (D-2000)	677 LF
2	CONSTRUCT 30" RCP (D-1200)	55 LF
3	CONSTRUCT 36" RCP (D-1200)	882 LF
4	CONSTRUCT 24" PVC OR PLAIN CONCRETE PIPE	262 LF
5	CONSTRUCT 54" RCP (D-1000)	904 LF
6	CONSTRUCT 60" RCP (D-1000)	652 LF
7	CONSTRUCT CATCH BASIN PER CITY OF RIVERSIDE STD. DWG. NO 405.	12 EA
8	CONSTRUCT 42" PVC OR PLAIN CONCRETE PIPE	165 LF
9	CONSTRUCT JUNCTION STRUCTURE "C" PER CITY OF RIVERSIDE STD. DWG NO. 422.	1 ~~12~~ 11 ~~13~~ EA
10	CONSTRUCT JUNCTION STRUCTURE NO.6 PER RCFC & WCD STD. DWG NO. 231.	1 EA
11	CONSTRUCT MANHOLE "AX" PER CITY OF RIVERSIDE STD. DWG NO. 430	5 EA
12	CONSTRUCT MANHOLE "EZ" PER CITY OF RIVERSIDE STD. DWG. NO 431.	1 EA
13	CONSTRUCT MANHOLE "JM" PER CITY OF RIVERSIDE STD. DWG NO. 432.	2 EA
14	CONSTRUCT STANDARD PIPE BEDDINGS PER CITY OF RIVERSIDE STD. DWG. NO. 452.	—
15	N/A	– EA
16	CONSTRUCT HEADWALL & WINGWALL PER CALTRANS STD. DWG. D-90 PER DETAIL ON SHT 11. (SEE PLAN & PROFILE FOR DIMENSIONS)	1 EA
17	CONSTRUCT 1/4 TON GROUTED RIP-RAP AS SHOWN ON SHEET 8.	52 CY
18	CONSTRUCT TRASH RACK PER DETAIL ON SHT. 11.	1 EA
19	CONSTRUCT 42" RCP (D-1500)	1492 ~~1525~~ LF 2
20	CONSTRUCT 63" RCP (D-1000)	55 LF
21	CONSTRUCT ADS N-12 FABRICATED MANIFOLD TEES PART NO. 4251AN DWR NO. MAN-101	2 EA
22	CONSTRUCT BROOKS PRODUCTS 24"X24" CATCH BASIN WITH STEEL TRAFFIC GRATE DWG NO. 2424	8 EA
23	CONSTRUCT CONCRETE COLLAR PER CITY OF RIVERSIDE STD DWG NO. 424	7 EA
24	CONSTRUCT 18" RCP (D-2000)	1 ~~59~~ 49 ~~52~~ LF 2
25	CONSTRUCT 30" PVC OR PLAIN CONCRETE PIPE	25 LF
26	CONSTRUCT JUNCTION STRUCTURE "B" PER CITY OF RIVERSIDE STD. DWG NO. 421.	4 EA
27	CONSTRUCT 20W X 6H ELLIPTICAL ARCH WITH CONCRETE FLOOR (SPECIAL SUBMITTAL REQUIRED) OR CAST-IN-PLACE REINFORCED CONCRETE DOUBLE BOX CULVERT CAL TRANS. STD D81 (DOUBLE 6H X 10W)	140 LF
28	CONSTRUCT RIP-RAP PER DETAIL ON SHEET 11.	43 CY
29	CONSTRUCT TIMBER BULKHEAD PER CITY OF RIVERSIDE STD. DWG. 456	1 EA
30	CONSTRUCT CATCH BASIN PER CITY OF RIVERSIDE STD. DWG. 407	8 EA
31	CONSTRUCT JUNCTION STRUCTURE NO. 1 PER RCFC & WCD DWG NO. JS226	1 EA
32	CONSTRUCT 36" PVC OR PLAIN CONCRETE PIPE	40 LF
33	CONSTRUCT 36" INLET TYPE X PER RCFC & WCD STD DWG. NO. CB108	8 EA
34	INSTALL "UNI-FLANGE SERIES 1390" JOINT RESTRAINT PER DETAIL ON SHEET 2	1 EA
35	CONSTRUCT THRUST BLOCK PER DETAIL ON SHEET 2	1 EA
36	INSTALL 10" CIRCULATION LINE (PVC CL-150 C-900)	88.91 LF
37	**CONSTRUCT JUNCTION STRUCTURE NO. 4 PER CITY STD. DWG. 423.**	**1 EA**
38	CONSTRUCT CATCH BASIN PER CITY OF RIVERSIDE STD. DWG. 406 (W= 13.3' - 4 GRATES)	1 EA.

STORM DRAIN NOTES

1. Quantities shown are for information only and the City of Riverside is not responsible for their accuracy.
2. Construction shall be in accordance with City of Riverside Dept. of Public Works Standard Drawings, its supplemental notes and the Standard Specifications for Public Works Construction, Current Edition.
3. It shall be the responsibility of the contractor to clear the right of way in accordance with the provisions of law as it affects each utilities including irrigation lines and appurtenances and at no cost to the City.
4. Notice to contractor. The existence and location of any underground utility pipes or structures shown on these plans were obtained by a search of the available records. To the best of our knowledge there are no existing utilities exept as shown on these plans. The contractor is required to take precautionary measures to protect the utility lines shown and any other lines not of record or not shown on these plans.
5. The private engineer signing these plans is responsible for assuring the accuracy and acceptability of the work hereon. In the event of discrepancies arising during construction, the private engineer shall be responsible for determining an acceptable solution and revising the plans for approval by the City.
6. The contractor shall call in a locations request to UNDERGROUND SERVICE ALERT (USA), Phone No. 1-800-227-2600, two working days before digging No construction permit will be issued by the Public Works Department involving excavation for underground facilities unless the applicant has been provided an Inquiry Identification Number by U.S.A.
7. The developer shall be responsible for preserving or re-establishing and referencing survey monuments destroyed, disturbed or buried as a result of construction shown hereon.
8. All embankment fill shall be compacted to minimum of 90% maximum dry density and shall be of an approved quality.
9. Before the Rip-Rap is accepted by the City, at the outlet of any drainage structure, it shall be tested under flows as close as possible to designed conditions with water obtained from fire hydrants in the immediate area.
10. All flagged elevations shall be staked in the field by the private engineer.
11. Contractor agrees that he shall assume sole and complete responsibility for job site conditions during the course of construction of this project, including safety of all persons and property; that this requirement shall apply continuously and not be limited to normal working hours; and that the contractor shall defend, indemnify and hold the owner and the engineer harmless from any and all liability, real or alleged, in connection with performance of work on this project, excepting for liability arising from the sole negligence of the owner or the engineer.
12. The concrete cover on the inside of all concrete pipe must be increased to provide a min. of 1.5" over the reinforcing when the design velocities exceed 20 fps. The concrete design strength in these reaches shall be:
    fc = 5000 psi. for velocities exceeding 20 fps. and
    fc = 6000 psi. for velocities exceeding 30 fps.
13. No person shall perform any construction activity or install any objects within the public rights-of-way or easements of the City of Riverside without a valid Construction Permit or, a Street Opening Permit or an Encroachment Permit issued by the City's Public Works Department.
14. Any traffic control striping obliterated and/or badly worn during construction shall be restored by the contractor within five days after notification from the City Inspectors.
15. On all areas within public right of way where the fill is one (1) foot or greater, a letter will be required from the soils engineer, certifying the compaction of the fill below subgrade, prior to issuance of the Construction Permit/Cut Sheets.

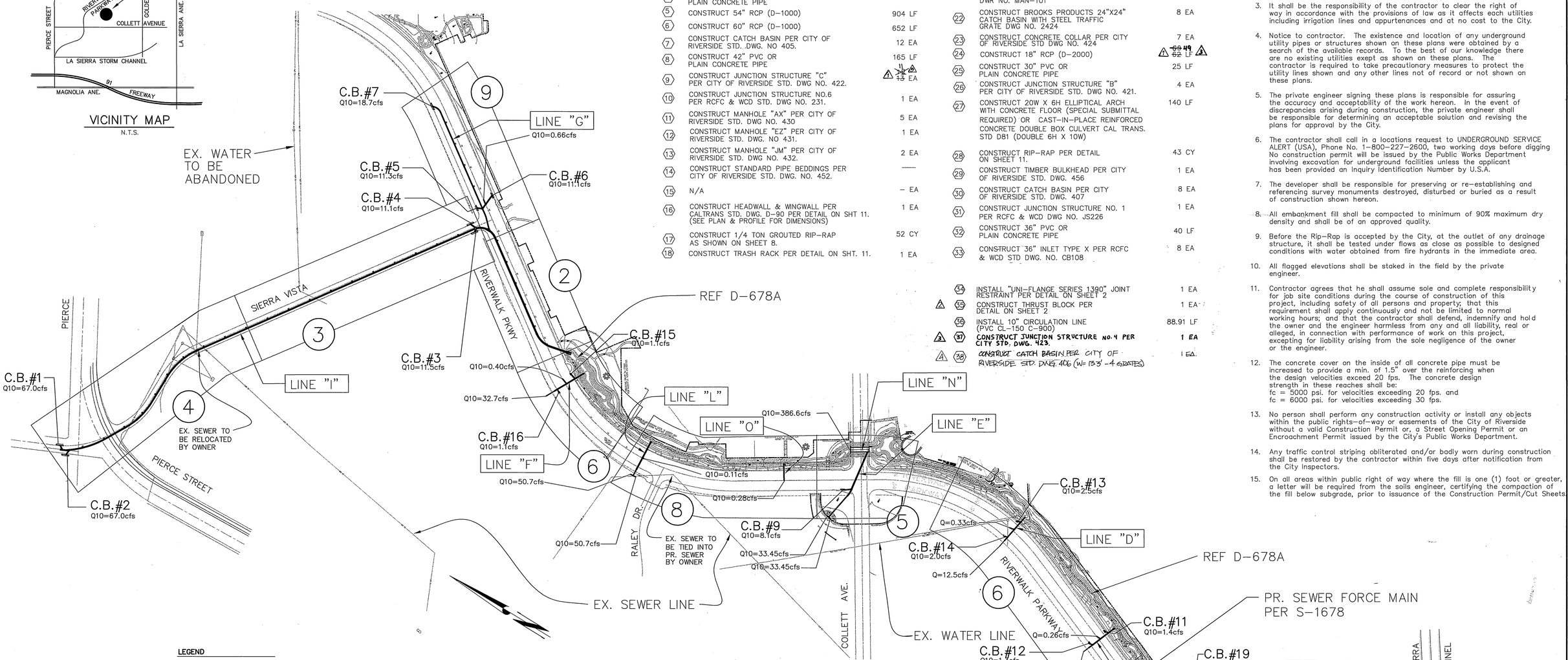

INDEX MAP

SCALE: 1=200'

LEGEND

(3) SHEET NO. INDEX

REGISTERED PROFESSIONAL ENGINEER JOHN W. CANTY No. 17550 Exp. 6/30/05 CIVIL STATE OF CALIFORNIA 4/19/05

AS BUILT

Underground Service Alert
Call: TOLL FREE 1 - 800 227-2600
TWO WORKING DAYS BEFORE YOU DIG

PRIVATE ENGINEERING NOTE

CONSTRUCTION CONTRACTOR AGREES THAT IN ACCORDANCE WITH GENERALLY ACCEPTED CONSTRUCTION PRACTICES, CONSTRUCTION CONTRACTOR WILL BE REQUIRED TO ASSUME SOLE AND COMPLETE RESPONSIBILITY FOR JOB SITE CONDITIONS DURING THE COURSE OF CONSTRUCTION OF THE PROJECT, INCLUDING SAFETY OF ALL PERSONS AND PROPERTY; THAT THIS REQUIREMENT SHALL BE MADE TO APPLY CONTINUOUSLY AND NOT BE LIMITED TO NORMAL WORKING HOURS, AND CONSTRUCTION CONTRACTOR FURTHER AGREES TO DEFEND, INDEMNIFY AND HOLD DESIGN PROFESSIONAL HARMLESS FROM ANY AND ALL LIABILITY, REAL OR ALLEGED, IN CONNECTION WITH THE PERFORMANCE OF WORK ON THIS PROJECT, EXCEPTING LIABILITY ARISING FROM THE SOLE NEGLIGENCE OF DESIGN PROFESSIONAL.

REGISTERED PROFESSIONAL ENGINEER JOHN W. CANTY No. 17550 Exp. 6-30-01 CIVIL STATE OF CALIFORNIA

PREPARED UNDER THE DIRECTION OF: John W. Canty
REGISTERED CIVIL ENGINEER NO. 17550
EXPIRATION DATE: 6-30-01 DATE: 8/3/00

CEG CANTY ENGINEERING GROUP, INC.
CIVIL ENGINEERING – PLANNING – SURVEYING
2020 IOWA AVENUE, SUITE 102, P.O. BOX 52050, RIVERSIDE, CA 92517
TEL (909) 683 – 5234 FAX (909) 683 – 5301
CITY OF RIV. BUSINESS TAX ACCT. NO. 69372 EXP. DATE 04-07-00

SCALE: AS SHOWN
DATE: JULY 1999
BENCH MARK: CITY OF RIV. B.M. E2-M3, PK NAIL & CITY ENGINEER TAG IN N'LY C.B. WING, W'LY CURB OF PIERCE ST. 1300' S'LY OF AMBS DR. ELEV.=694.231

MARK	REVISIONS	APPR.	DATE
5	REVISE CONST. NOTE QUANTITIES	RVZ	4/4/02
4	ADD CONSTRUCTION NOTE #38	RVZ	3/18/02
3	ADD CONSTRUCTION NOTES	JC	11/5/00
2	ADD CONSTRUCTION NOTES	JC	11/4/00
1	REVISED QUANTITIES	RVZ	3/1/01

DESIGNED BY J.D.G. DRAWN BY C.E.A. CHECKED BY J.W.C. KARL

CITY OF RIVERSIDE, CALIFORNIA
DEPARTMENT OF PUBLIC WORKS

APPROVED BY	BY	DATE
PRINCIPAL ENGR.		
PARK DEPARTMENT	—	—
TRAFFIC DIVISION	—	—
DEP. P.W. DIR. ENGR.		
ST. SERVICE		

APPROVED BY R. McGrath
DIRECTOR OF PUBLIC WORKS
DATE 9-19-2000

IN THE CITY OF RIVERSIDE
LA SIERRA UNIVERSITY
STORM DRAIN
TITLE SHEET
FOR: GRIFFIN INDUSTRIES

PROJECT NO. D-678
SHEET 1 OF 11
FILE NO.: 1104-001

INDEXED 12-5-2000 LH

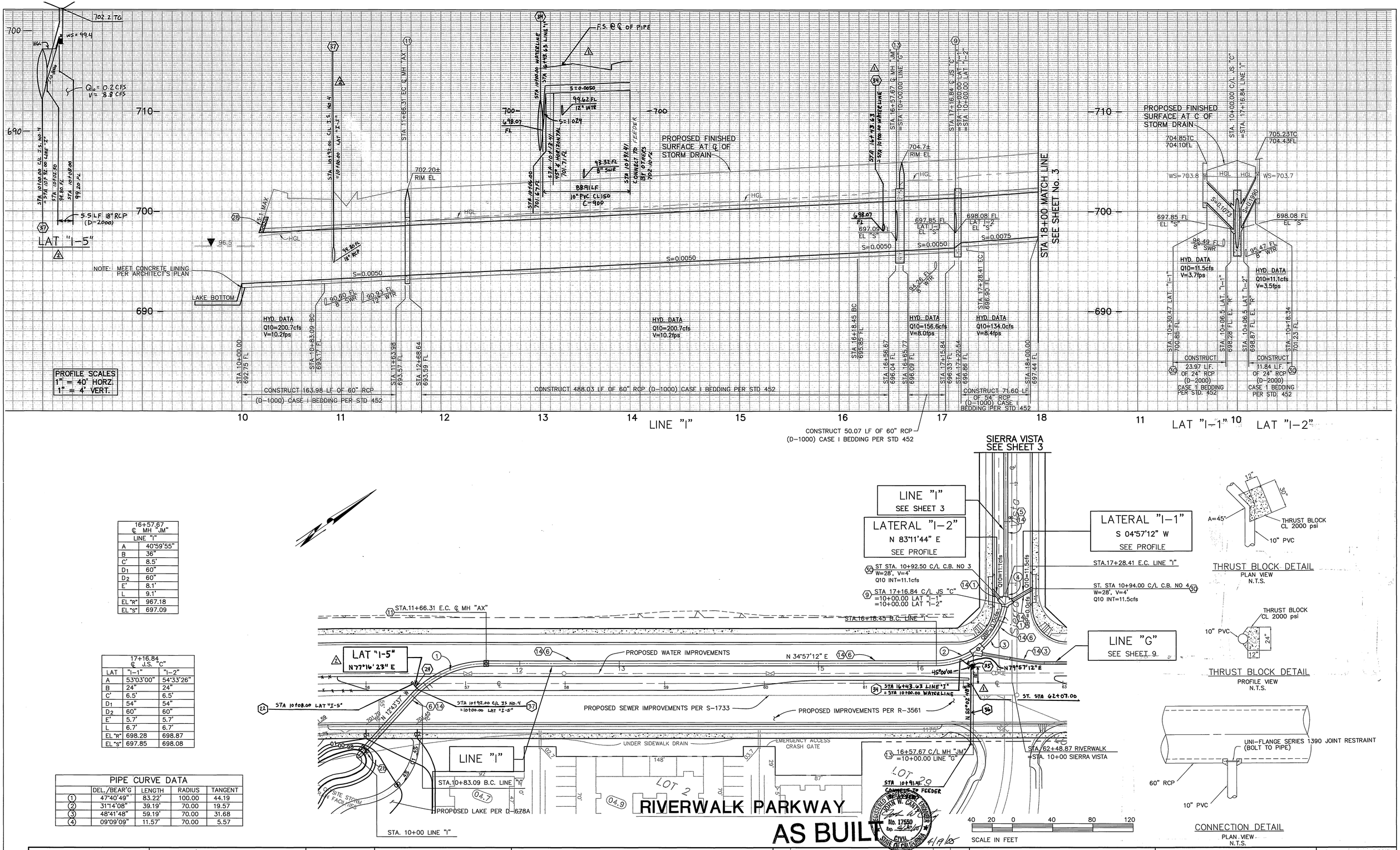

16+57.67 ℄ MH "JM"	
LINE "I"	
A	40°59'55"
B	36"
C'	8.5'
D_1	60"
D_2	60"
E'	8.1'
L	9.1'
EL "R"	967.18
EL "S"	697.09

17+16.84 ℄ J.S. "C"		
LAT	"I-1"	"I-2"
A	53°03'00"	54°33'26"
B	24"	24"
C'	6.5'	6.5'
D_1	54"	54"
D_2	60"	60"
E'	5.7'	5.7'
L	6.7'	6.7'
EL "R"	698.28	698.87
EL "S"	697.85	698.08

PIPE CURVE DATA				
	DEL./BEAR'G	LENGTH	RADIUS	TANGENT
1	47°40'49"	83.22'	100.00	44.19
2	31°14'08"	39.19'	70.00	19.57
3	48°41'48"	59.19'	70.00	31.68
4	09°09'09"	11.57'	70.00	5.57

Underground Service Alert
Call: TOLL FREE 1 - 800 227-2600
TWO WORKING DAYS BEFORE YOU DIG

PRIVATE ENGINEERING NOTE

CONSTRUCTION CONTRACTOR AGREES THAT IN ACCORDANCE WITH GENERALLY ACCEPTED CONSTRUCTION PRACTICES, CONSTRUCTION CONTRACTOR WILL BE REQUIRED TO ASSUME SOLE AND COMPLETE RESPONSIBILITY FOR JOB SITE CONDITIONS DURING THE COURSE OF CONSTRUCTION OF THE PROJECT, INCLUDING SAFETY OF ALL PERSONS AND PROPERTY; THAT THIS REQUIREMENT SHALL BE MADE TO APPLY CONTINUOUSLY AND NOT BE LIMITED TO NORMAL WORKING HOURS, AND CONSTRUCTION CONTRACTOR FURTHER AGREES TO DEFEND, INDEMNIFY AND HOLD DESIGN PROFESSIONAL HARMLESS FROM ANY AND ALL LIABILITY, REAL OR ALLEGED, IN CONNECTION WITH THE PERFORMANCE OF WORK ON THIS PROJECT, EXCEPTING LIABILITY ARISING FROM THE SOLE NEGLIGENCE OF DESIGN PROFESSIONAL.

REGISTERED PROFESSIONAL ENGINEER JOHN W. CANTY No. 17550 Exp. 6-30-01 CIVIL STATE OF CALIFORNIA

PREPARED UNDER THE DIRECTION OF:
REGISTERED CIVIL ENGINEER NO. 17550
EXPIRATION DATE: 6-30-01 DATE: 8/3/00

CEG CANTY ENGINEERING GROUP, INC.
CIVIL ENGINEERING – PLANNING – SURVEYING
2020 IOWA AVENUE, SUITE 102, P.O. BOX 52050, RIVERSIDE, CA 92517
TEL (909) 683 – 5234 FAX (909) 683 – 5301
CITY OF RIV. BUSINESS TAX ACCT. NO. 69372 EXP. DATE 04-07-00

SCALE: 1"=40'
DATE: JULY 1999

BENCH MARK:
CITY OF RIV. B.M. E2-M3, PK NAIL & CITY ENGINEER TAG IN N'LY C.B. WING, W'LY CURB OF PIERCE ST. 1300' S'LY OF AMBS DR.
ELEV.=694.231

MARK	REVISIONS	APPR.	DATE
2	ADD LATERAL "I-5" FEED	SC	11/14/00
1	ADDED POND FEEDER LINE FEED	SC	11/14/00

DESIGNED BY J.D.G. DRAWN BY C.E.A. CHECKED BY J.W.C.

CITY OF RIVERSIDE, CALIFORNIA
DEPARTMENT OF PUBLIC WORKS

APPROVED BY	BY	DATE
PRINCIPAL ENGR.		9/21/00
PARK DEPARTMENT	–	–
TRAFFIC DIVISION	–	–
DEP. P.W. DIR. ENGR.		9/14/00
ST. SERVICES		9/15/00

APPROVED BY R. McGrath
DIRECTOR OF PUBLIC WORKS
DATE 9-14-2000

IN THE CITY OF RIVERSIDE
LA SIERRA UNIVERSITY
STORM DRAIN PLANS
LINE "I"
LAT "I-1" & "I-2"
FOR: GRIFFIN INDUSTRIES

PROJECT NO. D-678
SHEET 2 OF 11
FILE NO.: 1104-001

INDEXED 12-5-2000 LH

H:\CEG CLIENT DIRECTORY\GRIFFIN-INDUSTRIES\LaSierra\storm drain plans\sd02.dwg, 08/02/00 09:40:54 AM, CANTY ENGINEERING GROUP, INC. C. ANGUIANO

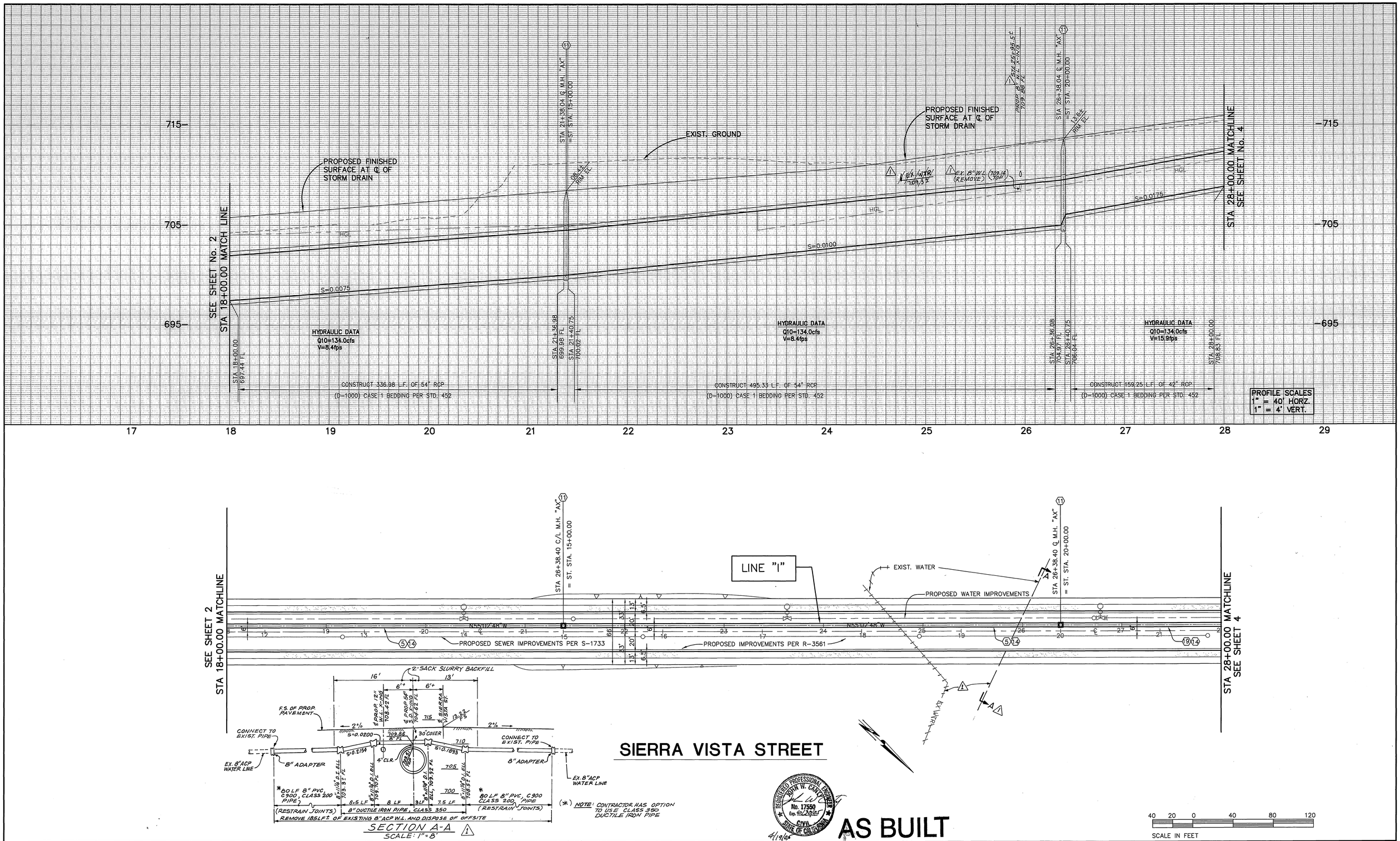

Underground Service Alert
Call: TOLL FREE
1 - 800
227-2600
TWO WORKING DAYS BEFORE YOU DIG

PRIVATE ENGINEERING NOTE

CONSTRUCTION CONTRACTOR AGREES THAT IN ACCORDANCE WITH GENERALLY ACCEPTED CONSTRUCTION PRACTICES, CONSTRUCTION CONTRACTOR WILL BE REQUIRED TO ASSUME SOLE AND COMPLETE RESPONSIBILITY FOR JOB SITE CONDITIONS DURING THE COURSE OF CONSTRUCTION OF THE PROJECT, INCLUDING SAFETY OF ALL PERSONS AND PROPERTY; THAT THIS REQUIREMENT SHALL BE MADE TO APPLY CONTINUOUSLY AND NOT BE LIMITED TO NORMAL WORKING HOURS, AND CONSTRUCTION CONTRACTOR FURTHER AGREES TO DEFEND, INDEMNIFY AND HOLD DESIGN PROFESSIONAL HARMLESS FROM ANY AND ALL LIABILITY, REAL OR ALLEGED, IN CONNECTION WITH THE PERFORMANCE OF WORK ON THIS PROJECT, EXCEPTING LIABILITY ARISING FROM THE SOLE NEGLIGENCE OF DESIGN PROFESSIONAL.

REGISTERED PROFESSIONAL ENGINEER JOHN W. CANTY No. 17550 Exp. 6-30-01 CIVIL STATE OF CALIFORNIA

PREPARED UNDER THE DIRECTION OF:
REGISTERED CIVIL ENGINEER NO. 17550
EXPIRATION DATE: 6-30-01 DATE: 8/2/00

CEG CANTY ENGINEERING GROUP, INC.
CIVIL ENGINEERING – PLANNING – SURVEYING
2020 IOWA AVENUE, SUITE 102, P.O. BOX 52050, RIVERSIDE, CA 92517
TEL (909) 683 – 5234 FAX (909) 683 – 5301
CITY OF RIV. BUSINESS TAX ACCT. NO. 69372 EXP. DATE 04-07-00

SCALE: 1"=40'
DATE: JULY 1999
BENCH MARK:

MARK	REVISIONS	APPR.	DATE
1	ADD SECTION A-A, REVISE 8" WL LOCATION		10/19/00

DESIGNED BY J.D.G. DRAWN BY C.E.A. CHECKED BY J.W.C.

CITY OF RIVERSIDE, CALIFORNIA
DEPARTMENT OF PUBLIC WORKS

APPROVED BY	BY	DATE
PRINCIPAL ENGR.		9/19/2000
PARK DEPARTMENT	—	—
TRAFFIC DIVISION	—	—
DEP. P.W. DIR. ENGR.		9/19/00
ST. SERVICES		9/19/00

APPROVED BY R. McGrath
DIRECTOR OF PUBLIC WORKS
DATE 9-19-2000

IN THE CITY OF RIVERSIDE
LA SIERRA UNIVERSITY
STORM DRAIN PLAN
LINE "I"
FOR: GRIFFIN INSDUSTRIES

PROJECT NO. D-678
SHEET 3 OF 11
FILE NO.: 1104-001

INDEXED 12-5-2000

H:\CEG CLIENT DIRECTORY\GRIFFIN-INDUSTRIES\LaSierra\storm drain plans\sd03.dwg, 08/01/2000 03:16:01 PM, HP 750C_ 36x25_NORMAL.pc3, CANTY ENG. GROUP, INC. P. LATHROP

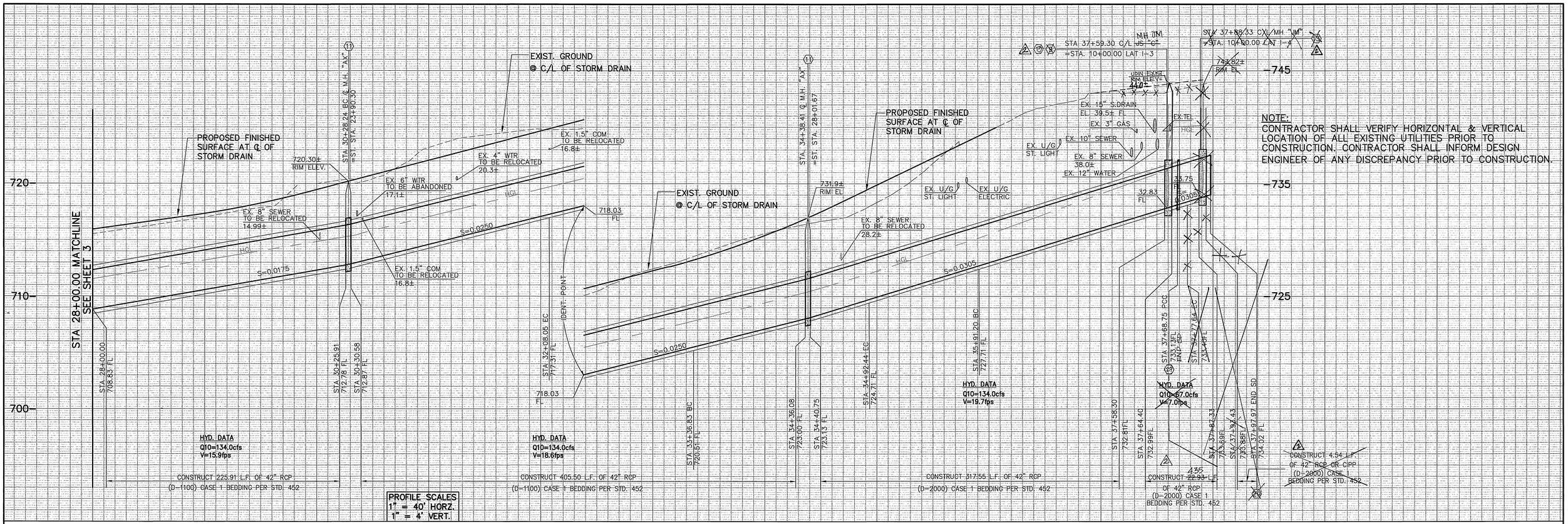

NOTE:
CONTRACTOR SHALL VERIFY HORIZONTAL & VERTICAL LOCATION OF ALL EXISTING UTILITIES PRIOR TO CONSTRUCTION. CONTRACTOR SHALL INFORM DESIGN ENGINEER OF ANY DISCREPANCY PRIOR TO CONSTRUCTION.

PIPE CURVE DATA				
CURVE/LINE	DEL./BEAR'G	LENGTH	RADIUS	TANGENT
1	34°54'16"	179.81	294.41	92.56
2	29°08'13"	155.61	306.00	79.53
3	25°02'00"	177.55	406.37	90.21
4	11°19'07"	8.89	45.00	4.46
5	N24°30'02"W	4.00	–	–

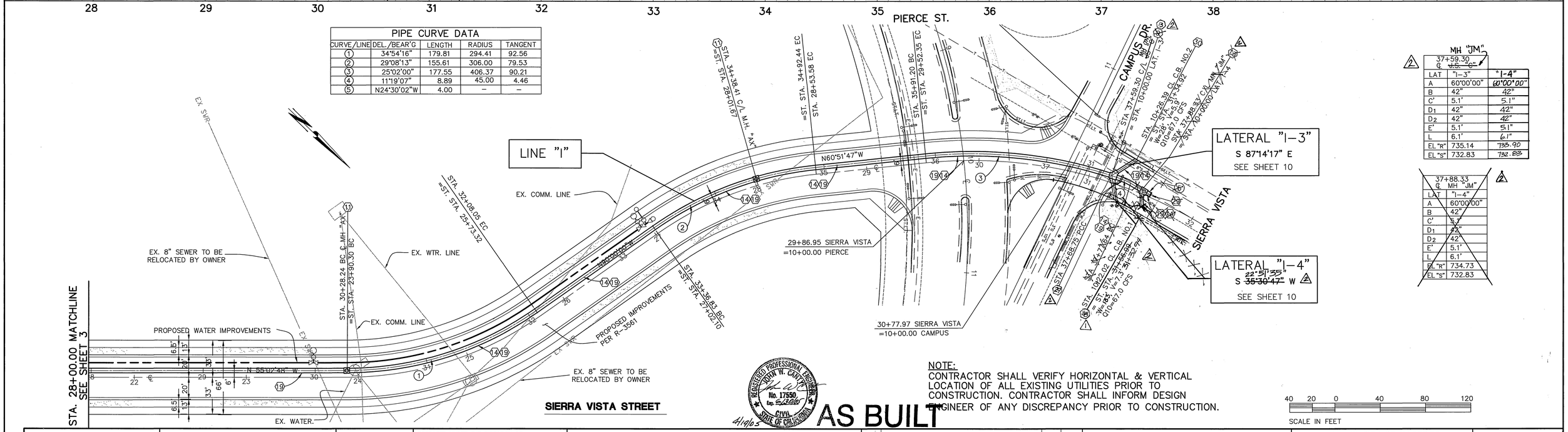

MH "JM" 37+59.30 ℄ J.S. "C"		
LAT	"I-3"	"I-4"
A	60°00'00"	~~60°00'00"~~
B	42"	42"
C'	5.1'	5.1"
D_1	42"	42"
D_2	42"	42"
E'	5.1'	5.1"
L	6.1'	6.1"
EL "R"	735.14	~~733.90~~
EL "S"	732.83	~~732.83~~

37+88.33 ℄ MH "JM"	
LAT	"I-4"
A	60°00'00"
B	42"
C'	5.1'
D_1	42"
D_2	42"
E'	5.1'
L	6.1'
EL "R"	734.73
EL "S"	732.83

NOTE:
CONTRACTOR SHALL VERIFY HORIZONTAL & VERTICAL LOCATION OF ALL EXISTING UTILITIES PRIOR TO CONSTRUCTION. CONTRACTOR SHALL INFORM DESIGN ENGINEER OF ANY DISCREPANCY PRIOR TO CONSTRUCTION.

Underground Service Alert
Call: TOLL FREE 1 – 800 227–2600
TWO WORKING DAYS BEFORE YOU DIG

PRIVATE ENGINEERING NOTE
CONSTRUCTION CONTRACTOR AGREES THAT IN ACCORDANCE WITH GENERALLY ACCEPTED CONSTRUCTION PRACTICES, CONSTRUCTION CONTRACTOR WILL BE REQUIRED TO ASSUME SOLE AND COMPLETE RESPONSIBILITY FOR JOB SITE CONDITIONS DURING THE COURSE OF CONSTRUCTION OF THE PROJECT, INCLUDING SAFETY OF ALL PERSONS AND PROPERTY; THAT THIS REQUIREMENT SHALL BE MADE TO APPLY CONTINUOUSLY AND NOT BE LIMITED TO NORMAL WORKING HOURS, AND CONSTRUCTION CONTRACTOR FURTHER AGREES TO DEFEND, INDEMNIFY AND HOLD DESIGN PROFESSIONAL HARMLESS FROM ANY AND ALL LIABILITY, REAL OR ALLEGED, IN CONNECTION WITH THE PERFORMANCE OF WORK ON THIS PROJECT, EXCEPTING LIABILITY ARISING FROM THE SOLE NEGLIGENCE OF DESIGN PROFESSIONAL.

REGISTERED PROFESSIONAL ENGINEER JOHN W. CANTY No. 17550 Exp. 6-30-01 CIVIL STATE OF CALIFORNIA

PREPARED UNDER THE DIRECTION OF:
REGISTERED CIVIL ENGINEER NO. 17550
EXPIRATION DATE: 6-30-01 DATE: 8/3/00

CBG CANTY ENGINEERING GROUP, INC.
CIVIL ENGINEERING – PLANNING – SURVEYING
2020 IOWA AVENUE, SUITE 102, P.O. BOX 52050, RIVERSIDE, CA 92517
TEL (909) 683 – 5234 FAX (909) 683 – 5301
CITY OF RIV. BUSINESS TAX ACCT. NO. 69372 EXP. DATE 04–07–00

SCALE: 1"=40' BENCH MARK:
DATE: JULY 1999

MARK	REVISIONS	APPR.	DATE
2	REVISE CB LAT "I-4"	RVZ	4/4/02
1	REVISE CB LAT "I-4"	RVZ	8/16/02

DESIGNED BY J.D.G. DRAWN BY C.E.A. CHECKED BY J.W.C.

CITY OF RIVERSIDE, CALIFORNIA
DEPARTMENT OF PUBLIC WORKS

APPROVED BY	BY	DATE
PRINCIPAL ENGR.		9/14/2000
PARK DEPARTMENT	—	—
TRAFFIC DIVISION	—	—
DEP. P.W. DIR. ENGR.	TRB	9/14/2000
ST. SERVICES		9/15/00

APPROVED BY R. McGrath
DIRECTOR OF PUBLIC WORKS
DATE 9-19-2000

IN THE CITY OF RIVERSIDE
LA SIERRA UNIVERSITY
STORM DRAIN PLANS
LINE "I"
FOR: GRIFFIN INDUSTRIES

PROJECT NO. D–678
SHEET 4 OF 11
FILE NO.: 1104–001

INDEXED 12-5-2000 GH

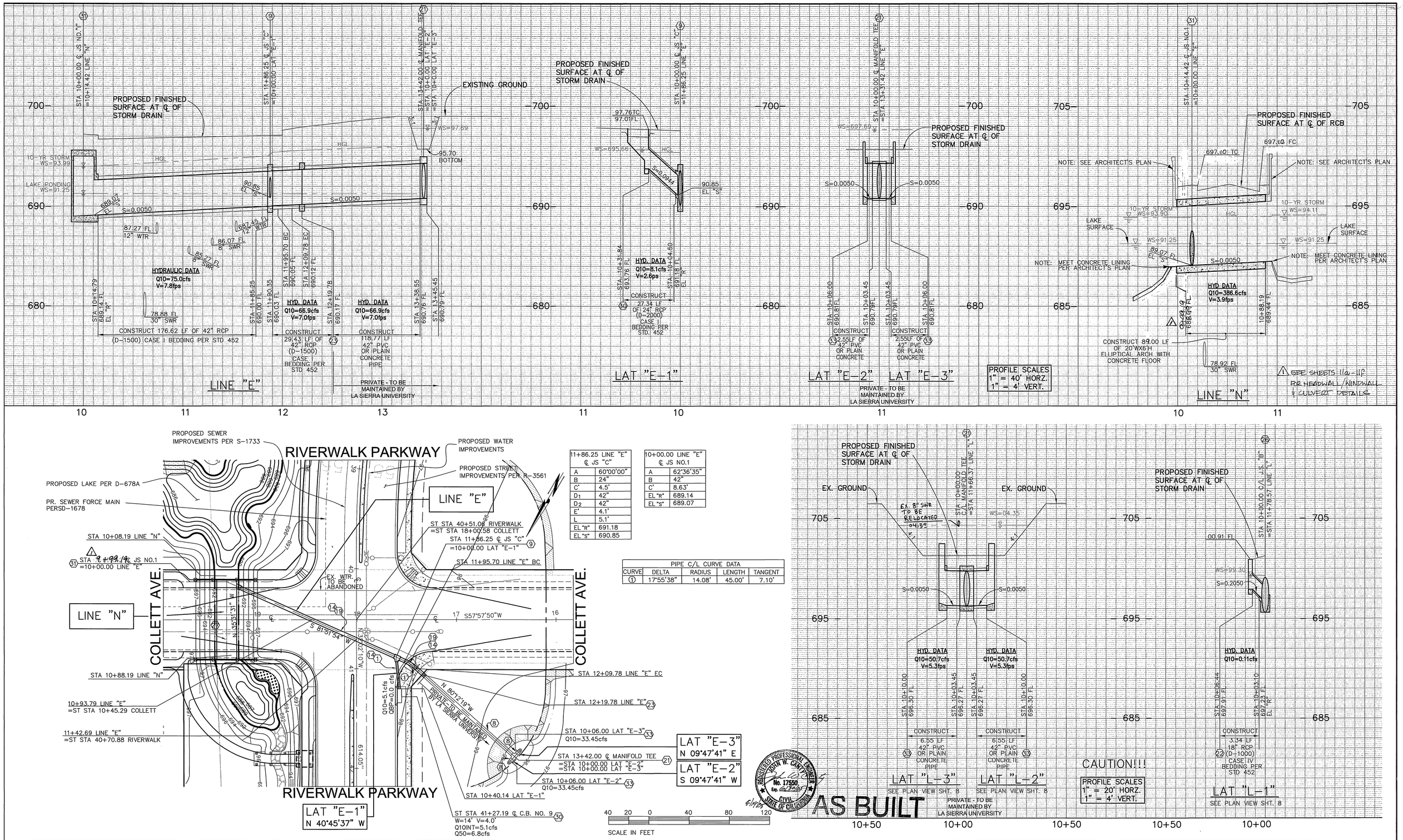

11+86.25 LINE "E" ℄ JS "C"	
A	60°00'00"
B	24"
C'	4.5'
D_1	42"
D_2	42"
E'	4.1'
L	5.1'
EL "R"	691.18
EL "S"	690.85

10+00.00 LINE "E" ℄ JS NO.1	
A	62°36'35"
B	42"
C'	8.63'
EL "R"	689.14
EL "S"	689.07

PIPE C/L CURVE DATA				
CURVE	DELTA	RADIUS	LENGTH	TANGENT
1	17°55'38"	14.08'	45.00'	7.10'

Underground Service Alert
Call: TOLL FREE 1 - 800 227-2600
TWO WORKING DAYS BEFORE YOU DIG

PRIVATE ENGINEERING NOTE

CONSTRUCTION CONTRACTOR AGREES THAT IN ACCORDANCE WITH GENERALLY ACCEPTED CONSTRUCTION PRACTICES, CONSTRUCTION CONTRACTOR WILL BE REQUIRED TO ASSUME SOLE AND COMPLETE RESPONSIBILITY FOR JOB SITE CONDITIONS DURING THE COURSE OF CONSTRUCTION OF THE PROJECT, INCLUDING SAFETY OF ALL PERSONS AND PROPERTY; THAT THIS REQUIREMENT SHALL BE MADE TO APPLY CONTINUOUSLY AND NOT BE LIMITED TO NORMAL WORKING HOURS, AND CONSTRUCTION CONTRACTOR FURTHER AGREES TO DEFEND, INDEMNIFY AND HOLD DESIGN PROFESSIONAL HARMLESS FROM ANY AND ALL LIABILITY, REAL OR ALLEGED, IN CONNECTION WITH THE PERFORMANCE OF WORK ON THIS PROJECT, EXCEPTING LIABILITY ARISING FROM THE SOLE NEGLIGENCE OF DESIGN PROFESSIONAL.

REGISTERED PROFESSIONAL ENGINEER JOHN W. CANTY No. 17550 Exp. 6-30-01 CIVIL STATE OF CALIFORNIA

PREPARED UNDER THE DIRECTION OF:
REGISTERED CIVIL ENGINEER NO. 17550
EXPIRATION DATE: 6-30-01 DATE: 8/3/00

CEG CANTY ENGINEERING GROUP, INC.
CIVIL ENGINEERING – PLANNING – SURVEYING
2020 IOWA AVENUE, SUITE 102, P.O. BOX 52050, RIVERSIDE, CA 92517
TEL (909) 683 – 5234 FAX (909) 683 – 5301
CITY OF RIV. BUSINESS TAX ACCT. NO. 69372 EXP. DATE 04-07-00

SCALE: 1"=40'
DATE: JULY 1999
BENCH MARK: CITY OF RIV. B.M. E2-M3, PK NAIL & CITY ENGINEER TAG IN N'LY C.B. WING, W'LY CURB OF PIERCE ST. 1300' S'LY OF AMBS DR. ELEV.=694.231

MARK	REVISIONS	APPR.	DATE
1	REVISE LINE "N"	JJG	3/29/01

DESIGNED BY J.D.G. DRAWN BY C.E.A. CHECKED BY J.W.C.

CITY OF RIVERSIDE, CALIFORNIA
DEPARTMENT OF PUBLIC WORKS

APPROVED BY	BY	DATE
PRINCIPAL ENGR.		9/19/2000
PARK DEPARTMENT	—	—
TRAFFIC DIVISION	—	—
DEP. P.W. DIR. ENGR.	TKB	9/19/00
ST. SERVICES		9/19/00

APPROVED BY R. McGrath
DIRECTOR OF PUBLIC WORKS
DATE 9-19-2000

IN THE CITY OF RIVERSIDE
LA SIERRA UNIVERSITY
STORM DRAIN PLANS
LINE "E","N", LAT "E-1","E-2 "E-3","L-1","L-2",&"L-3"
FOR: GRIFFIN INDUSTRIES

PROJECT NO. D-678
SHEET 5 OF 11
FILE NO.: 1104-001

INDEXED 12-5-2000

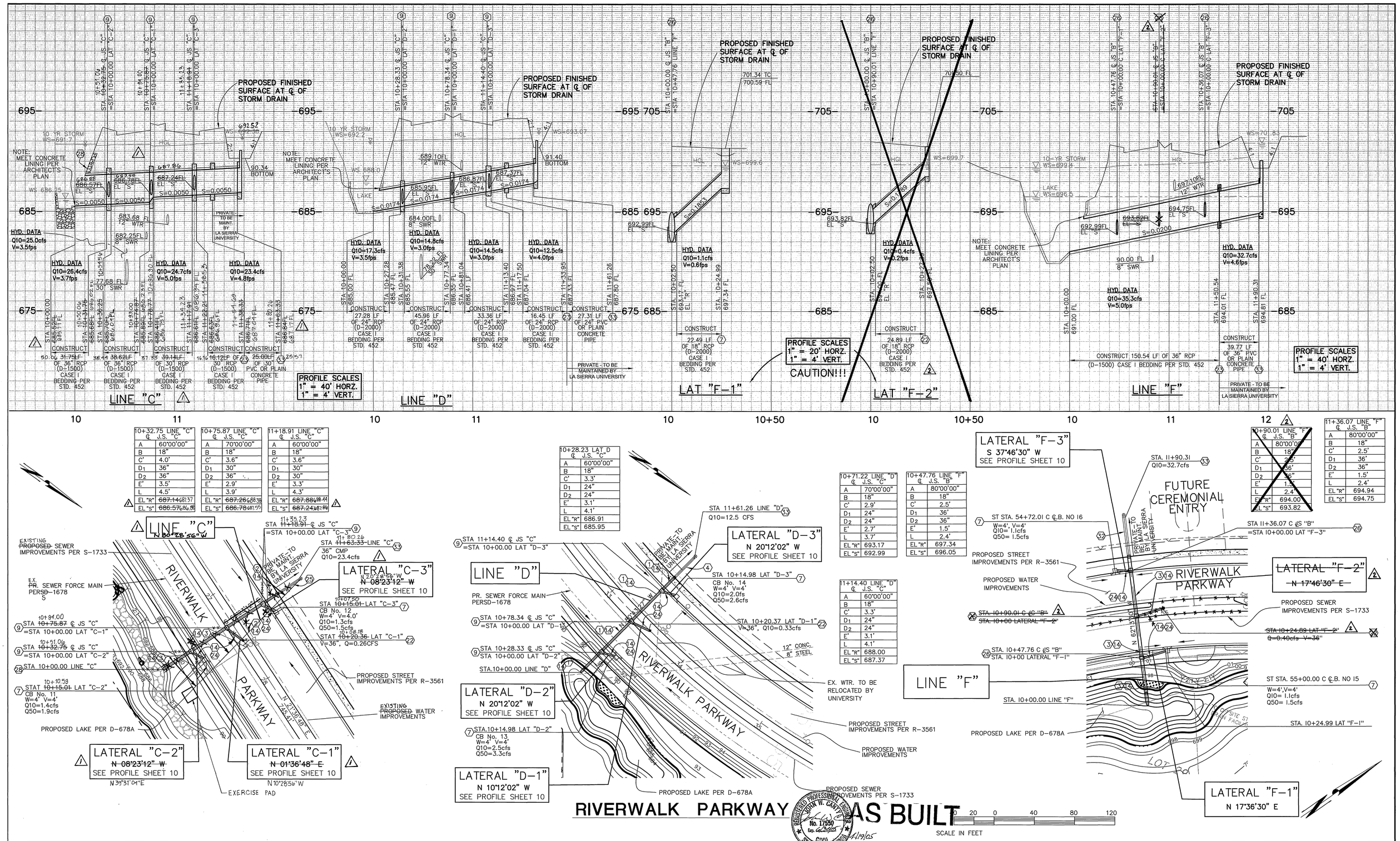

10+32.75 LINE "C" ℄ J.S. "C"	
A	60°00'00"
B	18"
C'	4.0'
D1	36"
D2	36"
E'	3.5'
L	4.5'
EL "R"	~~687.14~~ 687.17
EL "S"	~~686.57~~ 686.60

10+75.87 LINE "C" ℄ J.S. "C"	
A	70°00'00"
B	18"
C'	3.6"
D1	30"
D2	36"
E'	2.9'
L	3.9'
EL "R"	~~687.26~~ 687.29
EL "S"	~~686.78~~ 686.81

11+18.91 LINE "C" ℄ J.S. "C"	
A	60°00'00"
B	18"
C'	3.6"
D1	30"
D2	30"
E'	3.3'
L	4.3'
EL "R"	~~687.88~~ 687.91
EL "S"	~~687.24~~ 687.27

10+28.23 LAT. D ℄ J.S. "C"	
A	60°00'00"
B	18"
C'	3.3'
D1	24"
D2	24"
E'	3.1'
L	4.1'
EL "R"	686.91
EL "S"	685.95

10+71.22 LINE "D" ℄ J.S. "C"	
A	70°00'00"
B	18"
C'	2.9'
D1	24"
D2	24"
E'	2.7'
L	3.7'
EL "R"	693.17
EL "S"	692.99

10+47.76 LINE "F" ℄ J.S. "B"	
A	80°00'00"
B	18"
C'	2.5'
D1	36'
D2	36"
E'	1.5'
L	2.4'
EL "R"	697.34
EL "S"	696.05

11+14.40 LINE "D" ℄ J.S. "C"	
A	60°00'00"
B	18"
C'	3.3'
D1	24"
D2	24"
E'	3.1'
L	4.1'
EL "R"	688.00
EL "S"	687.37

10+90.01 LINE "F" ℄ J.S. "B"	
A	80°00'00"
B	18"
C'	2.5'
D1	36'
D2	36"
E'	1.5'
L	2.4'
EL "R"	694.00
EL "S"	693.82

11+36.07 LINE "F" ℄ J.S. "B"	
A	80°00'00"
B	18"
C'	2.5'
D1	36'
D2	36"
E'	1.5'
L	2.4'
EL "R"	694.94
EL "S"	694.75

Underground Service Alert
Call: TOLL FREE 1 - 800 227-2600
TWO WORKING DAYS BEFORE YOU DIG

PRIVATE ENGINEERING NOTE

CONSTRUCTION CONTRACTOR AGREES THAT IN ACCORDANCE WITH GENERALLY ACCEPTED CONSTRUCTION PRACTICES, CONSTRUCTION CONTRACTOR WILL BE REQUIRED TO ASSUME SOLE AND COMPLETE RESPONSIBILITY FOR JOB SITE CONDITIONS DURING THE COURSE OF CONSTRUCTION OF THE PROJECT, INCLUDING SAFETY OF ALL PERSONS AND PROPERTY; THAT THIS REQUIREMENT SHALL BE MADE TO APPLY CONTINUOUSLY AND NOT BE LIMITED TO NORMAL WORKING HOURS, AND CONSTRUCTION CONTRACTOR FURTHER AGREES TO DEFEND, INDEMNIFY AND HOLD DESIGN PROFESSIONAL HARMLESS FROM ANY AND ALL LIABILITY, REAL OR ALLEGED, IN CONNECTION WITH THE PERFORMANCE OF WORK ON THIS PROJECT, EXCEPTING LIABILITY ARISING FROM THE SOLE NEGLIGENCE OF DESIGN PROFESSIONAL.

REGISTERED PROFESSIONAL ENGINEER JOHN W. CANTY No. 17550 Exp. 6-30-01 CIVIL STATE OF CALIFORNIA

PREPARED UNDER THE DIRECTION OF:
REGISTERED CIVIL ENGINEER NO. 17550
EXPIRATION DATE: 6-30-01 DATE: 8/3/00

CANTY ENGINEERING GROUP, INC.
CIVIL ENGINEERING - PLANNING - SURVEYING
2020 IOWA AVENUE, SUITE 102, P.O. BOX 52050, RIVERSIDE, CA 92517
TEL (909) 683 - 5234 FAX (909) 683 - 5301
CITY OF RIV. BUSINESS TAX ACCT. NO. 69372 EXP. DATE 04-07-00 02

SCALE: 1"=40'
DATE: JULY 1999

BENCH MARK:
CITY OF RIV. B.M. E2-M3, PK NAIL & CITY ENGINEER TAG IN N'LY C.B. WING, W'LY CURB OF PIERCE ST. 1300' S'LY OF AMBS DR.
ELEV.=694.231

MARK	REVISIONS	APPR.	DATE
2	REVISED LINE "F" & LAT "F-2"		11/17/00
1	REVISED LINE "C" REALIGNMENT		8/15/01

DESIGNED BY J.D.G. DRAWN BY C.E.A. CHECKED BY J.W.C.
KARL A

CITY OF RIVERSIDE, CALIFORNIA
DEPARTMENT OF PUBLIC WORKS

APPROVED BY	BY	DATE
PRINCIPAL ENGR.		8/14/2000
PARK DEPARTMENT	—	—
TRAFFIC DIVISION	—	—
DEP. P.W. DIR. ENGR.		9/14/00
ST. SERVICES		9/15/00

APPROVED BY R. Tre Grath
DIRECTOR OF PUBLIC WORKS
DATE 9-14-2000

IN THE CITY OF RIVERSIDE
LA SIERRA UNIVERSITY
STORM DRAIN PLANS
LINE "C", "D", "F"
LATERAL "F-1", & "F-2"
FOR: GRIFFIN INDUSTRIES

PROJECT NO. D-678
SHEET 6 OF 11
FILE NO.: 1104-001

INDEXED 12-5-2000 GH

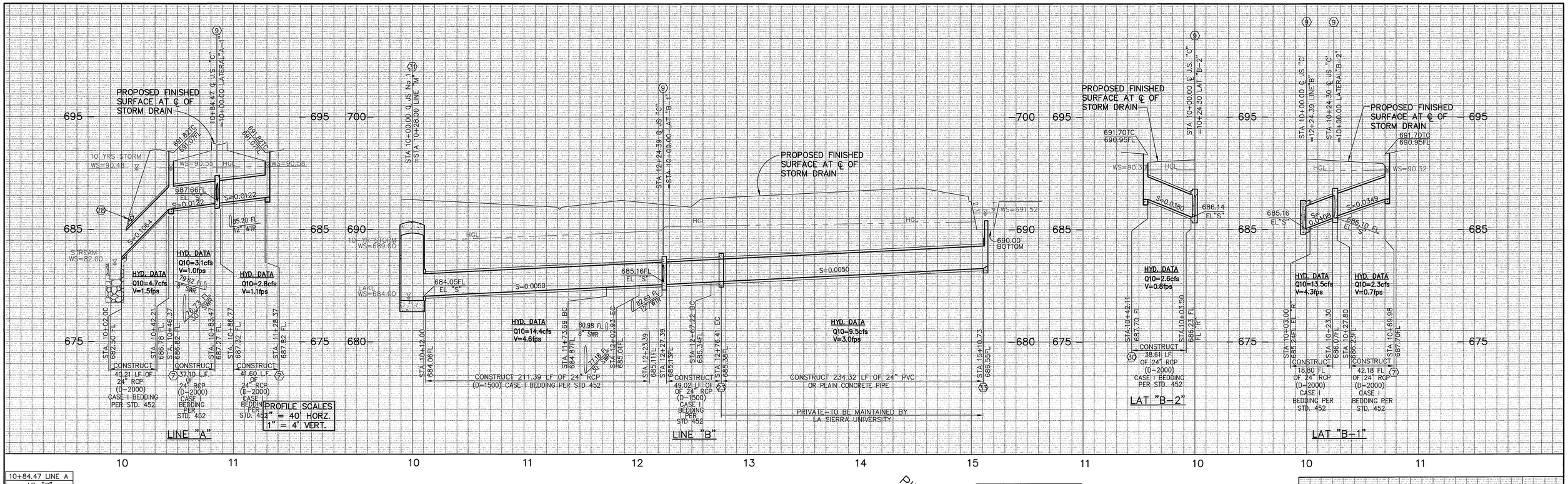

10+84.47 LINE A J.S. "C"	
A	60°00'00"
B	18"
C'	3.3'
D_1	24"
D_2	24"
E'	3.1'
L	4.1'
EL "R"	688.06
EL "S"	687.66

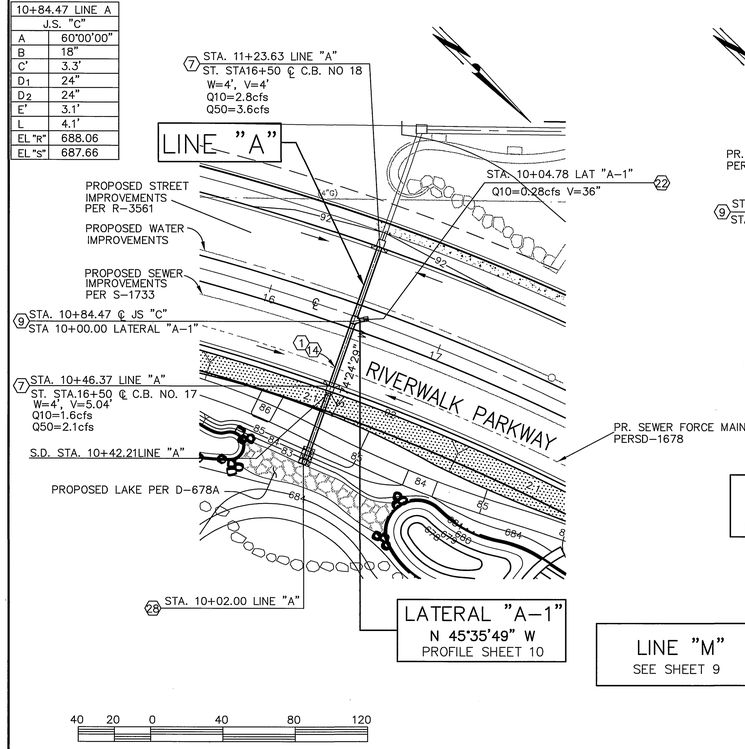

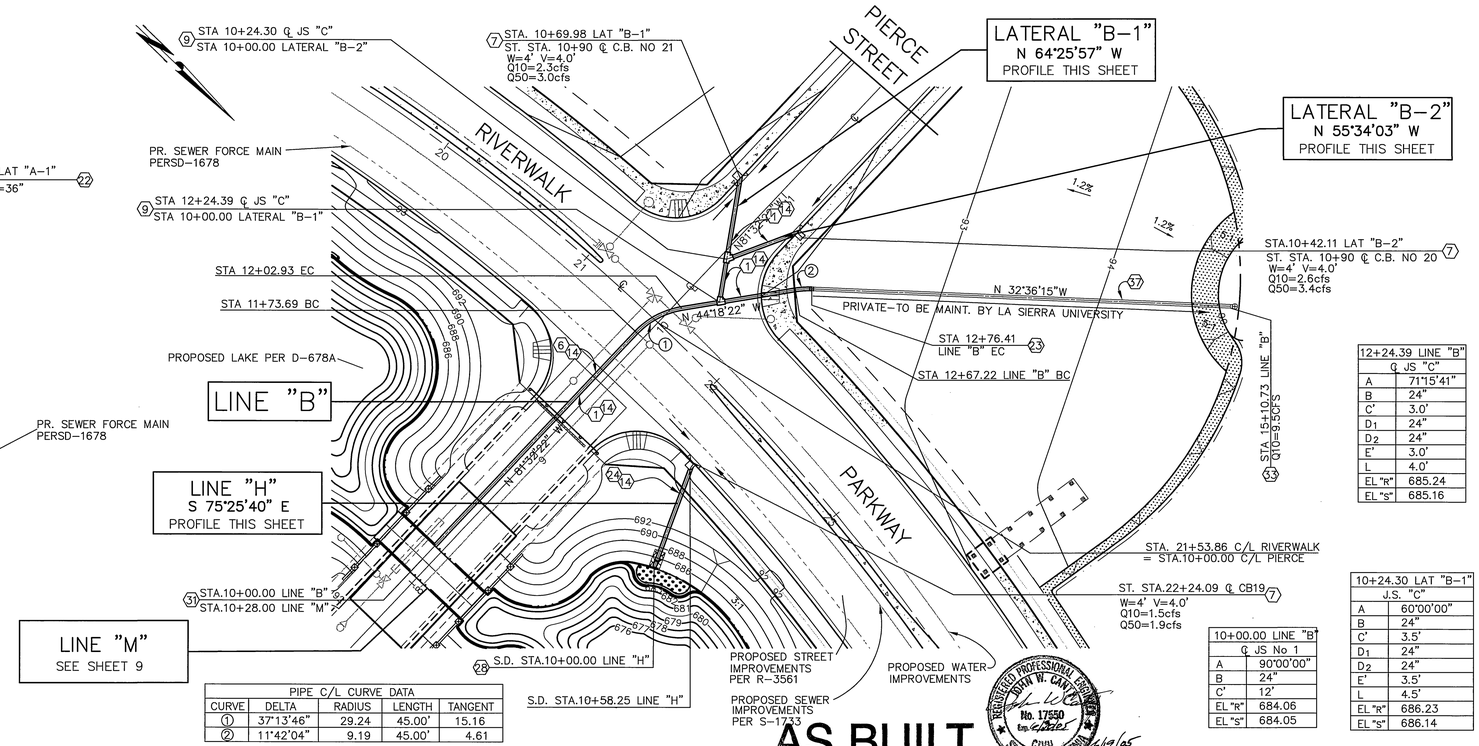

12+24.39 LINE "B" ℄ JS "C"	
A	71°15'41"
B	24"
C'	3.0'
D_1	24"
D_2	24"
E'	3.0'
L	4.0'
EL "R"	685.24
EL "S"	685.16

10+00.00 LINE "B" ℄ JS No 1	
A	90°00'00"
B	24"
C'	12'
EL "R"	684.06
EL "S"	684.05

10+24.30 LAT "B-1" J.S. "C"	
A	60°00'00"
B	24"
C'	3.5'
D_1	24"
D_2	24"
E'	3.5'
L	4.5'
EL "R"	686.23
EL "S"	686.14

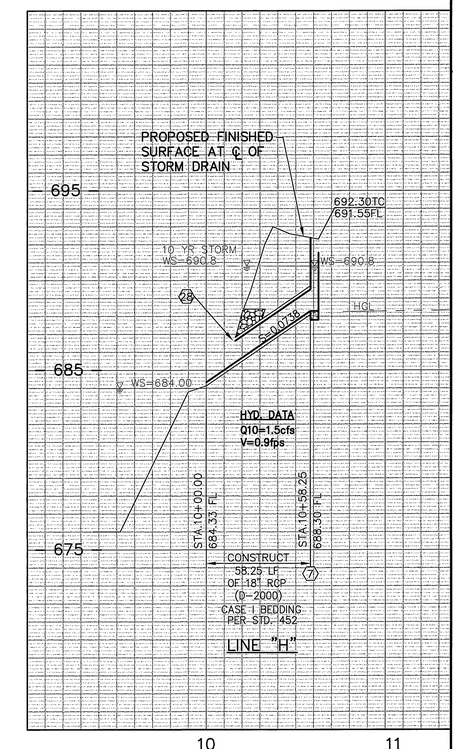

PIPE C/L CURVE DATA				
CURVE	DELTA	RADIUS	LENGTH	TANGENT
1	37°13'46"	29.24	45.00'	15.16
2	11°42'04"	9.19	45.00'	4.61

SCALE IN FEET: 40 20 0 40 80 120

AS BUILT

REGISTERED PROFESSIONAL ENGINEER JOHN W. CANTY No. 17550 Exp. 6-30-01 CIVIL STATE OF CALIFORNIA 4/19/05

Underground Service Alert
Call: TOLL FREE 1 - 800 227-2600
TWO WORKING DAYS BEFORE YOU DIG

PRIVATE ENGINEERING NOTE

CONSTRUCTION CONTRACTOR AGREES THAT IN ACCORDANCE WITH GENERALLY ACCEPTED CONSTRUCTION PRACTICES, CONSTRUCTION CONTRACTOR WILL BE REQUIRED TO ASSUME SOLE AND COMPLETE RESPONSIBILITY FOR JOB SITE CONDITIONS DURING THE COURSE OF CONSTRUCTION OF THE PROJECT, INCLUDING SAFETY OF ALL PERSONS AND PROPERTY; THAT THIS REQUIREMENT SHALL BE MADE TO APPLY CONTINUOUSLY AND NOT BE LIMITED TO NORMAL WORKING HOURS; AND CONSTRUCTION CONTRACTOR FURTHER AGREES TO DEFEND, INDEMNIFY AND HOLD DESIGN PROFESSIONAL HARMLESS FROM ANY AND ALL LIABILITY, REAL OR ALLEGED, IN CONNECTION WITH THE PERFORMANCE OF WORK ON THIS PROJECT, EXCEPTING LIABILITY ARISING FROM THE SOLE NEGLIGENCE OF DESIGN PROFESSIONAL.

REGISTERED PROFESSIONAL ENGINEER JOHN W. CANTY No. 17550 Exp. 6-30-01 CIVIL STATE OF CALIFORNIA

PREPARED UNDER THE DIRECTION OF: John W. Canty
REGISTERED CIVIL ENGINEER NO. 17550
EXPIRATION DATE: 6-30-01 DATE: 8/3/00

CEG CANTY ENGINEERING GROUP, INC.
CIVIL ENGINEERING – PLANNING – SURVEYING
2020 IOWA AVENUE, SUITE 102, P.O. BOX 52050, RIVERSIDE, CA 92517
TEL (909) 683 – 5234 FAX (909) 683 – 5301
CITY OF RIV. BUSINESS TAX ACCT. NO. 69372 EXP. DATE 04-07-00

SCALE: 1"=40'
DATE: JULY 1999

BENCH MARK:
CITY OF RIV. B.M. E2-M3, PK NAIL & CITY ENGINEER TAG IN N'LY C.B. WING, W'LY CURB OF PIERCE ST. 1300' S'LY OF AMBS DR.
ELEV.=694.231

MARK	REVISIONS	APPR.	DATE

DESIGNED BY J.D.G. DRAWN BY C.E.A. CHECKED BY J.W.C.

KARL

CITY OF RIVERSIDE, CALIFORNIA
DEPARTMENT OF PUBLIC WORKS

APPROVED BY	BY	DATE
PRINCIPAL ENGR.		9/14/00
PARK DEPARTMENT	—	—
TRAFFIC DIVISION	—	—
DEP. P.W. DIR. ENGR.		9/18/00
ST. SERVICES		9/15/00

APPROVED BY R. Mc Grath
DIRECTOR OF PUBLIC WORKS
DATE 9-14-2000

IN THE CITY OF RIVERSIDE
LA SIERRA UNIVERSITY
STORM DRAIN PLANS
LINE "A", LINE "B",
LINE "H", & LAT "B-1" & "B-2"
FOR: GRIFFIN INDUSTRIES

PROJECT NO. D-678
SHEET 7 OF 11
FILE NO.: 1104-001

INDEXED 12-5-2000 LH

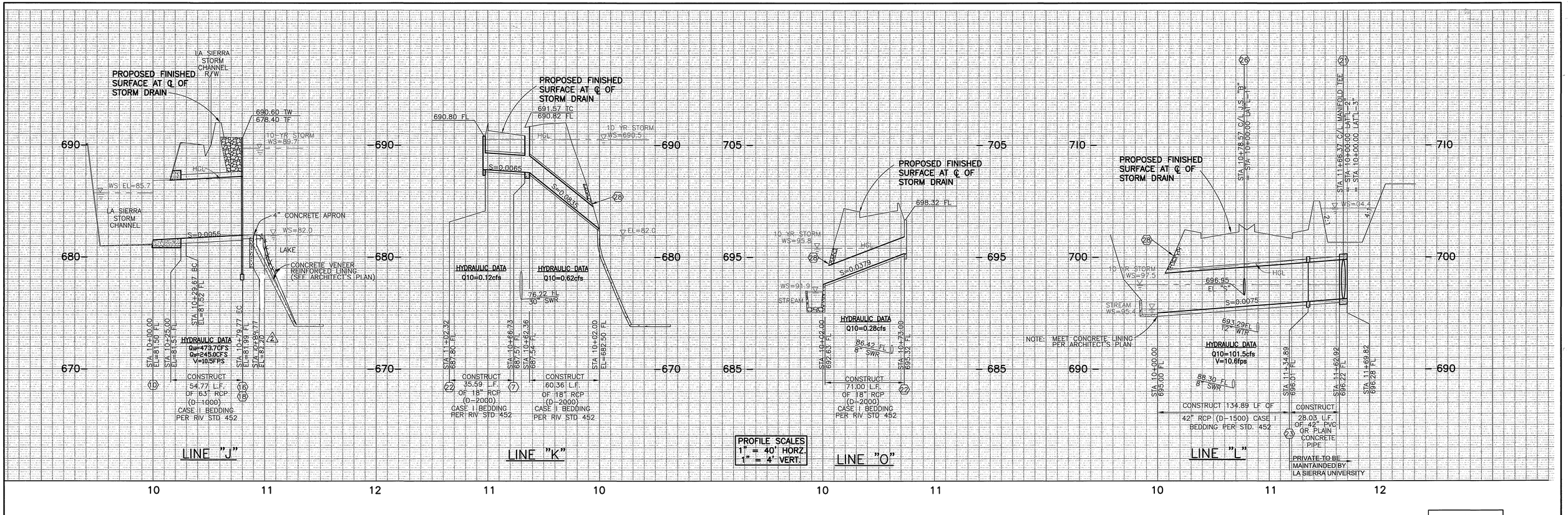

PIPE C/L CURVE DATA				
CURVE/LINE	DEL./BEAR'G	LENGTH	RADIUS	TANGENT
1	63°47'39"	50.10	45.00	28.01

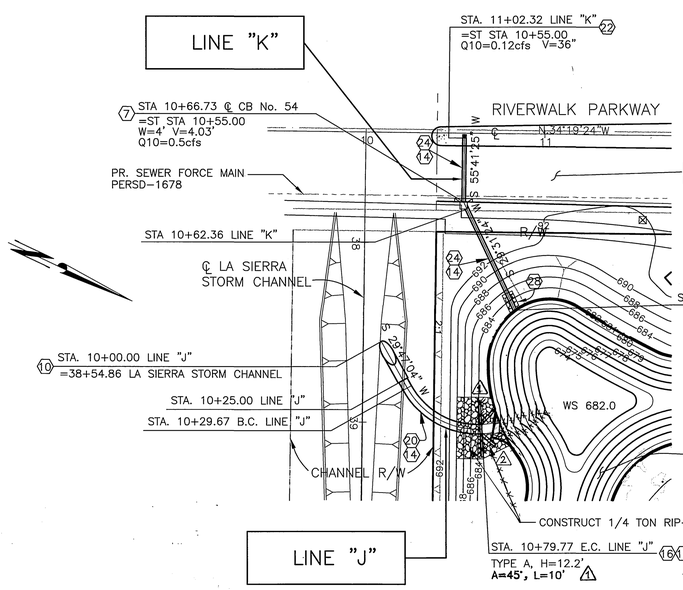

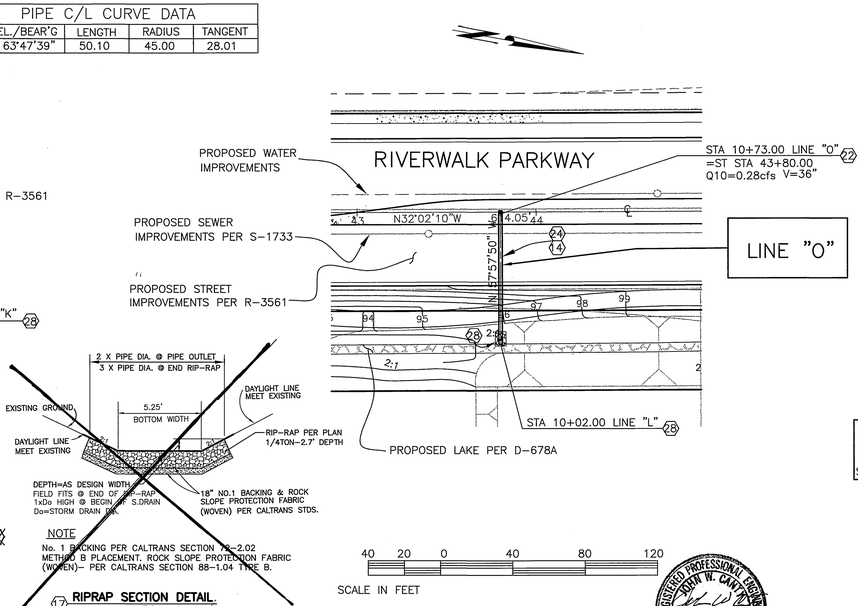

10+78.57 LINE "L" ℄ JS "B"	
A	80°00'00"
B	18"
C'	3.1'
D_1	42"
D_2	42"
E'	1.5'
L	2.3'
EL "R"	697.23
EL "S"	696.95

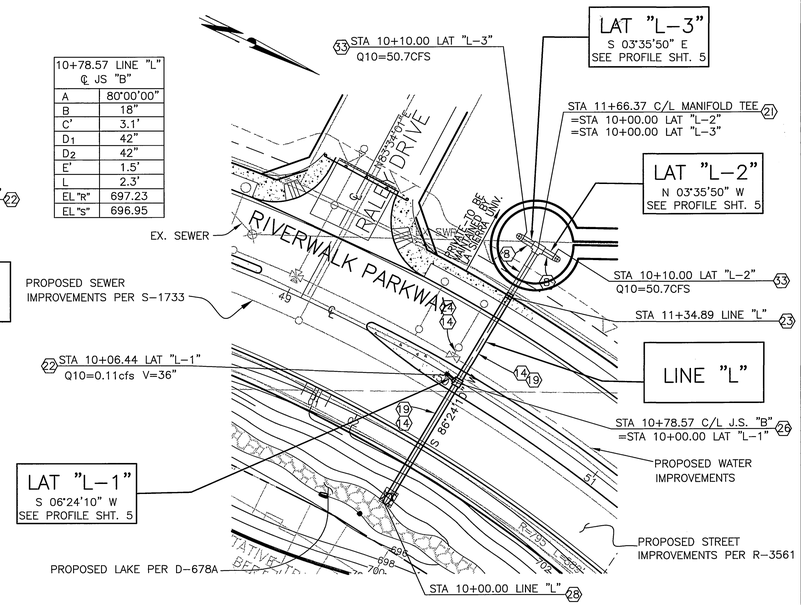

AS BUILT

Underground Service Alert
Call: TOLL FREE 1 - 800 227-2600
TWO WORKING DAYS BEFORE YOU DIG

PRIVATE ENGINEERING NOTE

CONSTRUCTION CONTRACTOR AGREES THAT IN ACCORDANCE WITH GENERALLY ACCEPTED CONSTRUCTION PRACTICES, CONSTRUCTION CONTRACTOR WILL BE REQUIRED TO ASSUME SOLE AND COMPLETE RESPONSIBILITY FOR JOB SITE CONDITIONS DURING THE COURSE OF CONSTRUCTION OF THE PROJECT, INCLUDING SAFETY OF ALL PERSONS AND PROPERTY; THAT THIS REQUIREMENT SHALL BE MADE TO APPLY CONTINUOUSLY AND NOT BE LIMITED TO NORMAL WORKING HOURS; AND CONSTRUCTION CONTRACTOR FURTHER AGREES TO DEFEND, INDEMNIFY AND HOLD DESIGN PROFESSIONAL HARMLESS FROM ANY AND ALL LIABILITY, REAL OR ALLEGED, IN CONNECTION WITH THE PERFORMANCE OF WORK ON THIS PROJECT, EXCEPTING LIABILITY ARISING FROM THE SOLE NEGLIGENCE OF DESIGN PROFESSIONAL.

REGISTERED PROFESSIONAL ENGINEER JOHN W. CANTY No. 17550 Exp. 6-30-01 CIVIL STATE OF CALIFORNIA

PREPARED UNDER THE DIRECTION OF:
REGISTERED CIVIL ENGINEER NO. 17550
EXPIRATION DATE: 6-30-01 DATE: 8/3/00

CEG CANTY ENGINEERING GROUP, INC.
CIVIL ENGINEERING – PLANNING – SURVEYING
2020 IOWA AVENUE, SUITE 102, P.O. BOX 52050, RIVERSIDE, CA 92517
TEL (909) 683 – 5234 FAX (909) 683 – 5301
CITY OF RIV. BUSINESS TAX ACCT. NO. 69372 EXP. DATE 04-07-00

SCALE: 1"=40'
DATE: JULY 1999

BENCH MARK:
CITY OF RIV. B.M. E2-M3, PK NAIL & CITY ENGINEER TAG IN N'LY C.B. WING, W'LY CURB OF PIERCE ST. 1300' S'LY OF AMBS DR.
ELEV.=694.231

MARK	REVISIONS	APPR.	DATE
2	REVISE APRON AND LAKE		12/19/01
1	REVISED HEADWALL		4/2/01

DESIGNED BY J.D.G. DRAWN BY C.E.A. CHECKED BY J.W.C.

CITY OF RIVERSIDE, CALIFORNIA
DEPARTMENT OF PUBLIC WORKS

APPROVED BY	BY	DATE
PRINCIPAL ENGR.		9/19/00
PARK DEPARTMENT	—	—
TRAFFIC DIVISION	—	—
DEP. P.W. DIR. ENGR. ST. SERVICES		9/19/00 9/15/00

APPROVED BY R. M. Grate
DIRECTOR OF PUBLIC WORKS
DATE 9-19-2000

IN THE CITY OF RIVERSIDE
LA SIERRA UNIVERSITY
STORM DRAIN PLANS
LINE "J", "K", "L" & "O"
FOR: GRIFFIN INDUSTRIES

PROJECT NO. D-678
SHEET 8 OF 11
FILE NO.: 1104-001

INDEXED 12-5-2000

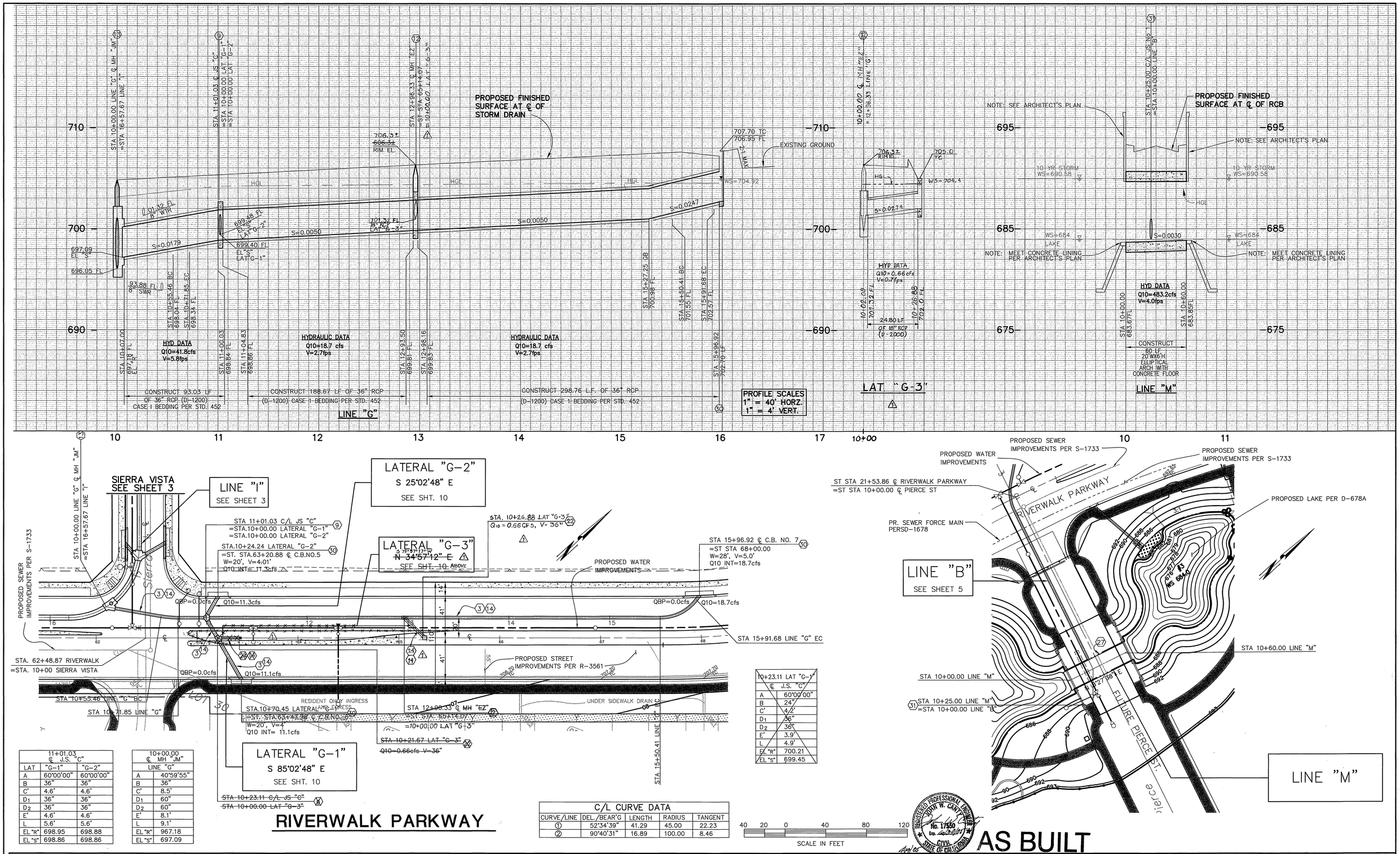

11+01.03 ℄ J.S. "C"		
LAT	"G-1"	"G-2"
A	60°00'00"	60°00'00"
B	36'	36'
C'	4.6'	4.6'
D_1	36"	36"
D_2	36"	36"
E'	4.6'	4.6'
L	5.6'	5.6'
EL "R"	698.95	698.88
EL "S"	698.86	698.86

10+00.00 ℄ MH "JM"	
LINE "G"	
A	40°59'55"
B	36'
C'	8.5'
D_1	60"
D_2	60"
E'	8.1'
L	9.1'
EL "R"	967.18
EL "S"	697.09

10+23.11 LAT "G-3" ℄ J.S. "C"	
A	60°00'00"
B	24'
C'	4.2'
D_1	36"
D_2	36"
E'	3.9'
L	4.9'
EL "R"	700.21
EL "S"	699.45

C/L CURVE DATA				
CURVE/LINE	DEL./BEAR'G	LENGTH	RADIUS	TANGENT
①	52°34'39"	41.29	45.00	22.23
②	90°40'31"	16.89	100.00	8.46

RIVERWALK PARKWAY

Underground Service Alert
Call: TOLL FREE 1 – 800 227–2600
TWO WORKING DAYS BEFORE YOU DIG

PRIVATE ENGINEERING NOTE

CONSTRUCTION CONTRACTOR AGREES THAT IN ACCORDANCE WITH GENERALLY ACCEPTED CONSTRUCTION PRACTICES, CONSTRUCTION CONTRACTOR WILL BE REQUIRED TO ASSUME SOLE AND COMPLETE RESPONSIBILITY FOR JOB SITE CONDITIONS DURING THE COURSE OF CONSTRUCTION OF THE PROJECT, INCLUDING SAFETY OF ALL PERSONS AND PROPERTY; THAT THIS REQUIREMENT SHALL BE MADE TO APPLY CONTINUOUSLY AND NOT BE LIMITED TO NORMAL WORKING HOURS, AND CONSTRUCTION CONTRACTOR FURTHER AGREES TO DEFEND, INDEMNIFY AND HOLD DESIGN PROFESSIONAL HARMLESS FROM ANY AND ALL LIABILITY, REAL OR ALLEGED, IN CONNECTION WITH THE PERFORMANCE OF WORK ON THIS PROJECT, EXCEPTING LIABILITY ARISING FROM THE SOLE NEGLIGENCE OF DESIGN PROFESSIONAL.

REGISTERED PROFESSIONAL ENGINEER JOHN W. CANTY No. 17550 Exp. 6-30-01 CIVIL STATE OF CALIFORNIA

PREPARED UNDER THE DIRECTION OF: John W. Canty
REGISTERED CIVIL ENGINEER NO. 17550
EXPIRATION DATE: 6-30-01 DATE: 8/3/00

CBG CANTY ENGINEERING GROUP, INC.
CIVIL ENGINEERING – PLANNING – SURVEYING
2020 IOWA AVENUE, SUITE 102, P.O. BOX 52050, RIVERSIDE, CA 92517
TEL (909) 683 – 5234 FAX (909) 683 – 5301
CITY OF RIV. BUSINESS TAX ACCT. NO. 69372 EXP. DATE 04–07–00

SCALE: 1"=40'
DATE: JULY 1999
BENCH MARK: CITY OF RIV. B.M. E2–M3, PK NAIL & CITY ENGINEER TAG IN N'LY C.B. WING, W'LY CURB OF PIERCE ST. 1300' S'LY OF AMBS DR. ELEV.=694.231

MARK	REVISIONS	BY	APPR.	DATE
1	REVISED S.D. FOR LEFT TURN POCKET	TRB		3/16/01

DESIGNED BY J.D.G. DRAWN BY C.E.A. CHECKED BY J.W.C.

CITY OF RIVERSIDE, CALIFORNIA
DEPARTMENT OF PUBLIC WORKS

	BY	DATE
PRINCIPAL ENGR.		9/14/00
PARK DEPARTMENT	—	—
TRAFFIC DIVISION	—	—
DEP. P.W. DIR. ENGR. ST. SERVICES	TRB / RW	9/14/00 / 10/5/00

APPROVED BY R. McGrath
DIRECTOR OF PUBLIC WORKS
DATE 9-14-2000

IN THE CITY OF RIVERSIDE
LA SIERRA UNIVERSITY
STORM DRAIN PLANS
LINE "G" & "M"
FOR: GRIFFIN INDUSTRIES

PROJECT NO. D-678
SHEET 9 OF 11
FILE NO.: 1104-001

INDEXED 12-5-2000 LH

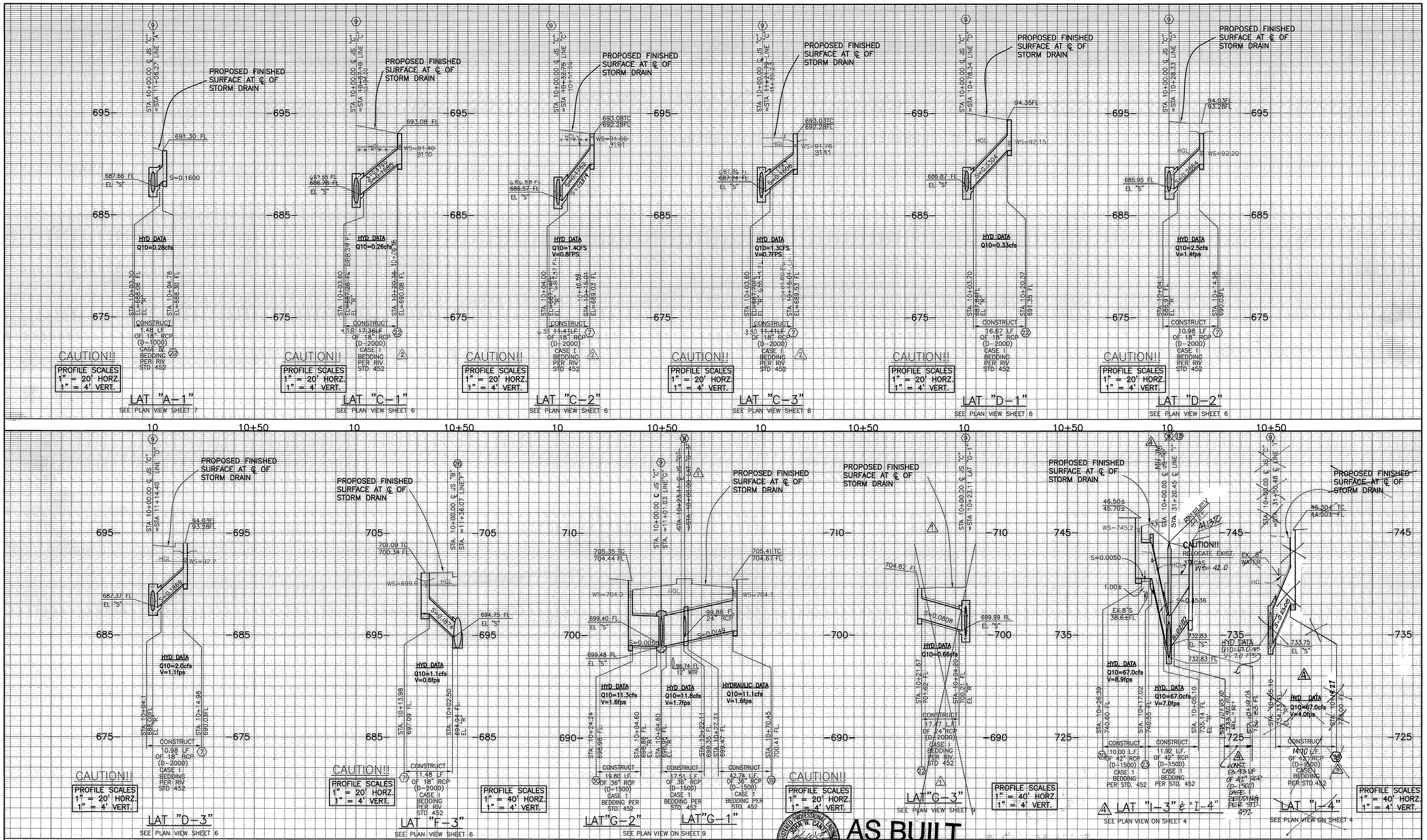

Underground Service Alert
Call: TOLL FREE 1 - 800 227-2600
TWO WORKING DAYS BEFORE YOU DIG

PRIVATE ENGINEERING NOTE

CONSTRUCTION CONTRACTOR AGREES THAT IN ACCORDANCE WITH GENERALLY ACCEPTED CONSTRUCTION PRACTICES, CONSTRUCTION CONTRACTOR WILL BE REQUIRED TO ASSUME SOLE AND COMPLETE RESPONSIBILITY FOR JOB SITE CONDITIONS DURING THE COURSE OF CONSTRUCTION OF THE PROJECT, INCLUDING SAFETY OF ALL PERSONS AND PROPERTY; THAT THIS REQUIREMENT SHALL BE MADE TO APPLY CONTINUOUSLY AND NOT BE LIMITED TO NORMAL WORKING HOURS, AND CONSTRUCTION CONTRACTOR FURTHER AGREES TO DEFEND, INDEMNIFY AND HOLD DESIGN PROFESSIONAL HARMLESS FROM ANY AND ALL LIABILITY, REAL OR ALLEGED, IN CONNECTION WITH THE PERFORMANCE OF WORK ON THIS PROJECT, EXCEPTING LIABILITY ARISING FROM THE SOLE NEGLIGENCE OF DESIGN PROFESSIONAL.

REGISTERED PROFESSIONAL ENGINEER JOHN W. CANTY No. 17550 Exp. 6-30-01 CIVIL STATE OF CALIFORNIA

PREPARED UNDER THE DIRECTION OF: John W. Canty
REGISTERED CIVIL ENGINEER NO. 17550
EXPIRATION DATE: 6-30-01 DATE: 8/2/00

CEG CANTY ENGINEERING GROUP, INC.
CIVIL ENGINEERING – PLANNING – SURVEYING
2020 IOWA AVENUE, SUITE 102, P.O. BOX 52050, RIVERSIDE, CA 92517
TEL (909) 683 – 5234 FAX (909) 683 – 5301
CITY OF RIV. BUSINESS TAX ACCT. NO. 69372 EXP. DATE 04-07-00

SCALE: 1"=40'
DATE: JULY 1999

BENCH MARK:
CITY OF RIV. B.M. E2-M3, PK NAIL & CITY ENGINEER TAG IN N'LY C.B. WING, W'LY CURB OF PIERCE ST. 1300' S'LY OF AMBS DR.
ELEV.=694.231

REGISTERED PROFESSIONAL ENGINEER JOHN W. CANTY No. 17550 Exp. 6-30-01 CIVIL STATE OF CALIFORNIA
11/1/05

MARK	REVISIONS	APPR.	DATE
4	REVISE LAT "I-4", ADD TC "I-3"	RVZ.	4/6/02
3	REVISED LAT "I-4"	RVZ.	3/18/02
2	REVISED LAT. C-1, C-2, & C-3	TJB	8/15/01
1	REVISED LATERAL "G-3"	TJB	3/1/01

DESIGNED BY J.D.G. DRAWN BY C.E.A. CHECKED BY J.W.C.

CITY OF RIVERSIDE, CALIFORNIA
DEPARTMENT OF PUBLIC WORKS

APPROVED BY	BY	DATE
PRINCIPAL ENGR.		
PARK DEPARTMENT	—	—
TRAFFIC DIVISION	—	—
DEP. P.W. DIR. ENGR.	DRG	9/14/00
ST. SERVICES		9/15/00

APPROVED BY R. McGrath
DIRECTOR OF PUBLIC WORKS
DATE 9-14-2000

IN THE CITY OF RIVERSIDE
LA SIERRA UNIVERSITY
STORM DRAIN PLANS
LAT. "A-1", "C-1", "C-2", "C-3", "D-1", "D-2", "D-3", "F-3", "G-1", "G-2", ~~"G-3"~~, "I-3", & "I-4"

FOR: GRIFFIN INDUSTRIES

PROJECT NO. D-678
SHEET 10 OF 11
FILE NO.: 1104-001

INDEXED 12-5-2000

H:\CEG CLIENT DIRECTORY\GRIFFIN-NO. 5\5 FS ..\Storm drain plans s10.dwg, 03 01 2000 05:39:05 PM, HP 750C_ 36x25_JIGRAW.pc3, CANTY ENG GROUP, INC. P LATHRCP

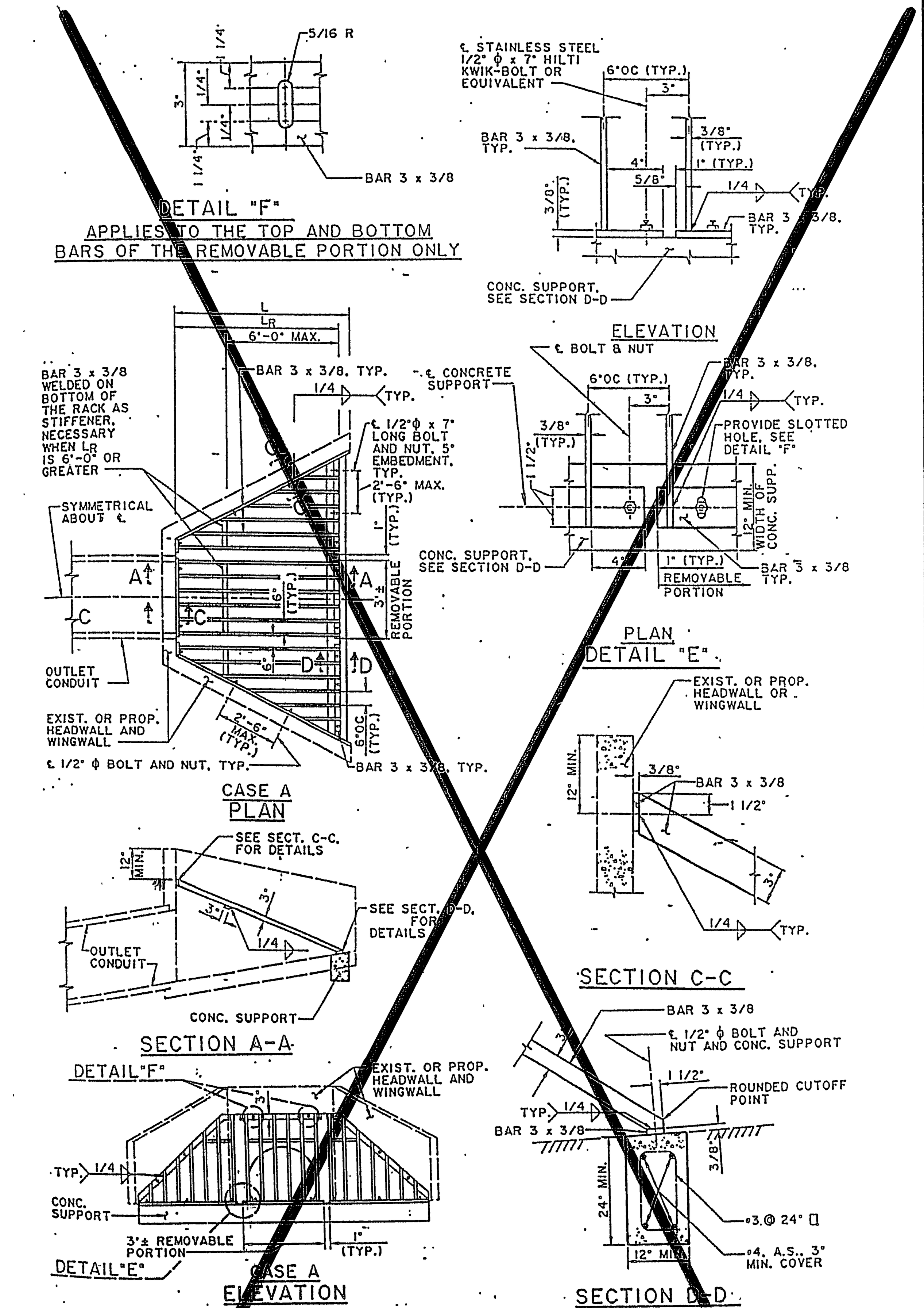

NOTES:

1 MAXIMUM SIZE OF OUTLET TO BE USED WITH THIS RACK IS 48" PIPE OR 48" WIDE RCB. MAXIMUM LENGTH OF RACK L_R IS 10'-0"

2 L_R CAN BE ADJUSTED SO THAT THE SLOPE OF THE RACK IS APPROXIMATELY 2 HORIZONTAL TO 1 VERTICAL.

3 THE CONCRETE SUPPORT IS NOT NECESSARY IS EXISTING OR PROPOSED INLET STRUCTURE HAS ADEQUATE SUPPORT CUTOFF WALL. IT DOES NOT ELIMIMATE THE NEED FOR A CUTOFF WALL BUT CAN BE INTEGRATED WITH ONE WHEN REQUIRED AT A PARTICULAR INSTALLATION.

4 GALVANIZE ALL EXPOSED FERROUS PARTS AFTER FABRICATION.

5 IF FIELD WELDS ARE NECESSARY, USE GALVICON, GALVALLOY OR DEPARTMENT APPORVED EQUAL FOR COATING.

6 ALL BOLTS SHALL BE 1/2" IN DIAMETER AND 7' IN LENGTH. ON REMOVABLE PORTION OF THE RACK, USE 300 SERIES STAINLESS STEEL BOLTS AND NUTS. WHERE HEADWALL AND WINGWALL ARE EXISTING, HILTI KWIK-BOLT OR EQUIVALENT CAN BE USED.

~~TRASH RACK (INCLINED) FOR STORM DRAIN~~

N.T.S.

(18) TRASH RACK DETAIL

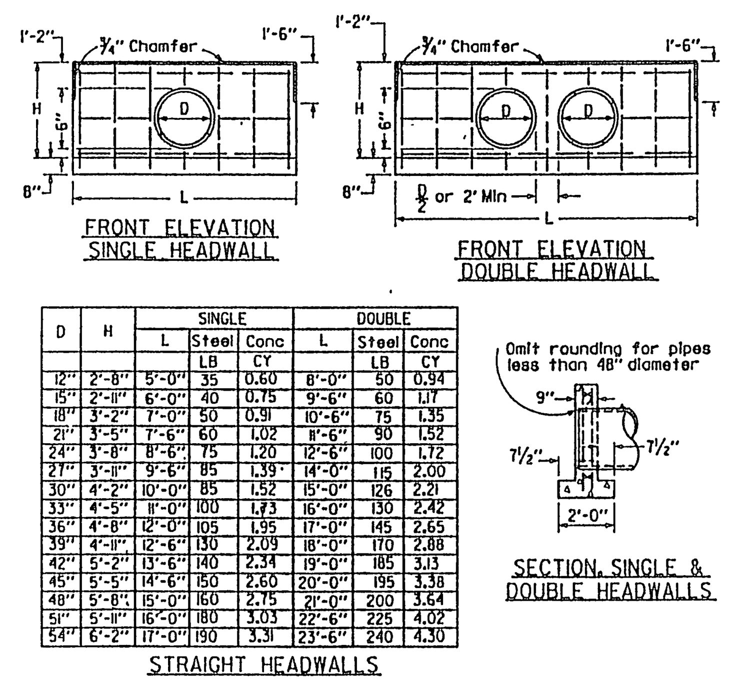

D	H	SINGLE L	SINGLE Steel LB	SINGLE Conc CY	DOUBLE L	DOUBLE Steel LB	DOUBLE Conc CY
12"	2'-8"	5'-0"	35	0.60	8'-0"	50	0.94
15"	2'-11"	6'-0"	40	0.75	9'-6"	60	1.17
18"	3'-2"	7'-0"	50	0.91	10'-6"	75	1.35
21"	3'-5"	7'-6"	60	1.02	11'-6"	90	1.52
24"	3'-8"	8'-6"	75	1.20	12'-6"	100	1.72
27"	3'-11"	9'-6"	85	1.39	14'-0"	115	2.00
30"	4'-2"	10'-0"	85	1.52	15'-0"	126	2.21
33"	4'-5"	11'-0"	100	1.73	16'-0"	130	2.42
36"	4'-8"	12'-0"	105	1.95	17'-0"	145	2.65
39"	4'-11"	12'-6"	130	2.09	18'-0"	170	2.88
42"	5'-2"	13'-6"	140	2.34	19'-0"	185	3.13
45"	5'-5"	14'-6"	150	2.60	20'-0"	195	3.38
48"	5'-8"	15'-0"	160	2.75	21'-0"	200	3.64
51"	5'-11"	16'-0"	180	3.03	22'-6"	225	4.02
54"	6'-2"	17'-0"	190	3.31	23'-6"	240	4.30

STRAIGHT HEADWALLS

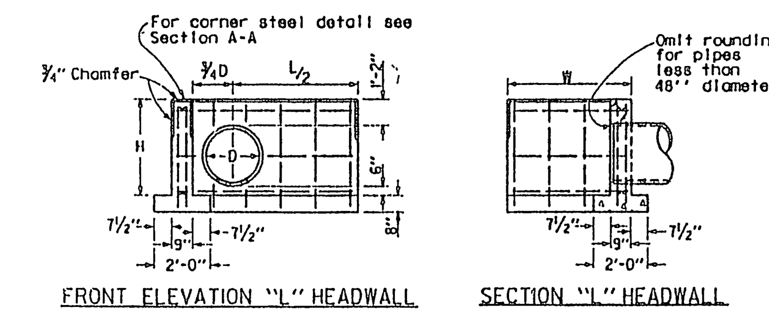

NOTES

1. No deduction made in quantities for thickness of pipe walls.
2. All reinforcing steel #4 bars. All vertical and horizontal tie bars 18" maximum spacing.
3. Length of wall "W" may be varied to suit conditions encountered in the field, and straight line interpolation may be used to calculate quantities.
4. Quantities are for design purposes only.

"L" HEADWALLS

CIRCULAR PIPE CULVERT HEADWALLS (15)

Design Notes.
Unit Stresses f_s = 24,000 psi, f_c = 1,300 psi, n = 10
Maximum Toe Pressure = 1 ½ Tons/sq ft
Elevations, length and angle of flare of wings may be varied by the Engineer to suit conditions encountered in the field
Walls designed for 2' live load surcharge, 1 ½ : 1 sloping surcharge not to exceed 5' in elevation plus 2' live load surcharge, or unlimited 2:1 surcharge. If 1½:1 slope exceeds 5', use Type 2 Retaining Wall.
Wall height may be exceeded by 6" before going to the next greater "H".

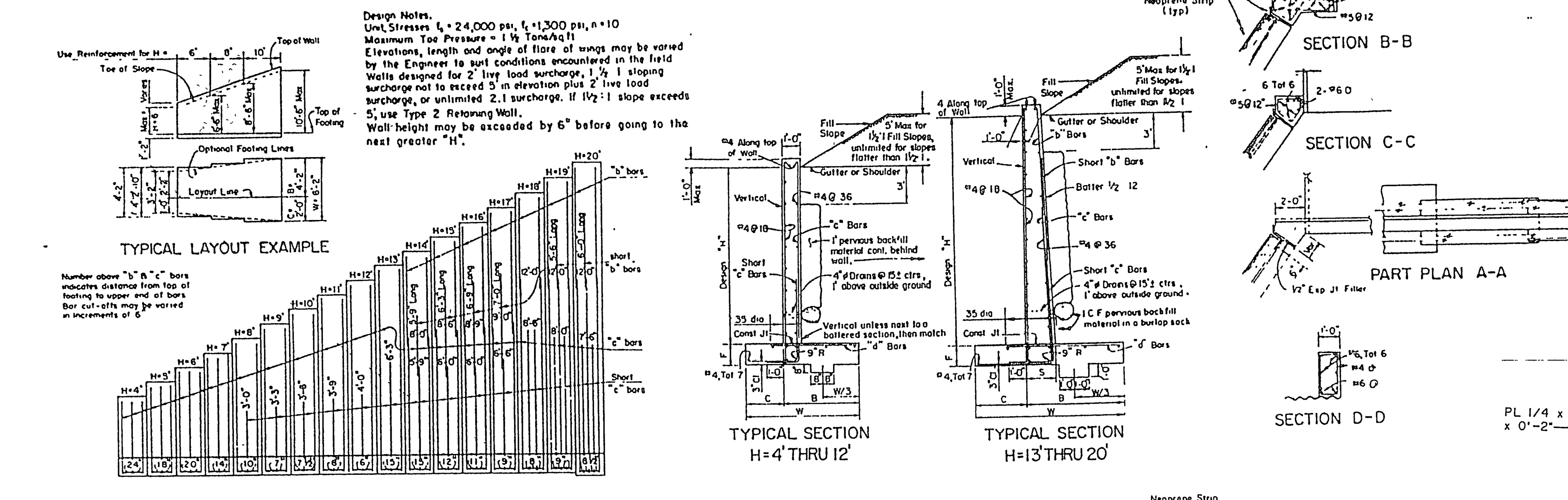

REINFORCED CONCRETE WINGWALLS																	
Design "H"	4'	5'	6'	7'	8'	9'	10'	11'	12'	13'	14'	15'	16'	17'	18'	19'	20'
W	3'-2"	3'-8"	4'-2"	4'-8"	5'-2"	5'-8"	6'-2"	6'-8"	7'-2"	7'-8"	8'-0"	8'-8"	9'-4"	10'-0"	10'-8"	11'-4"	12'-0"
C	1'-0"	1'-2"	1'-4"	1'-6"	1'-8"	1'-10"	2'-0"	2'-2"	2'-4"	2'-6"	2'-8"	3'-0"	3'-4"	3'-8"	4'-0"	4'-4"	4'-8"
B	2'-2"	2'-6"	2'-10"	3'-2"	3'-6"	3'-10"	4'-2"	4'-6"	4'-10"	5'-2"	5'-4"	5'-8"	6'-0"	6'-4"	6'-8"	7'-0"	7'-4"
F	1'-2"																1'-4"
Batter	None									1/2:12							
S	1'-0"									1'-6½	1'-7"	1'-7½	1'-8"	1'-8½	1'-9"	1'-9½	1'-10"
"b" bars	None										#5@15	#5@12	#5@11	#5@9	#6@24	#6@18	#7@17
"c" bars	#4@24	#4@18	#5@20	#5@14	#5@10	#5@7	#6@7½	#7@8	#7@6	#9@15	#10@15	#10@12	#10@11	#10@9	#10@8	#11@9	#11@8½
"d" bars	#4@24	#4@18	#5@20	#5@14	#5@10	#6@14	#7@15	#8@16	#7@12	#8@15	#9@15	#9@12	#9@11	#9@9	#9@8	#10@9	#10@8½
Conc CY/ft	0.32	0.38	0.44	0.49	0.55	0.61	0.67	0.73	0.79	1.02	1.10	1.18	1.26	1.36	1.45	1.55	1.72
Reinf LBS/ft	13	16	19	25	30	37	49	62	76	73	90	104	123	141	170	189	206

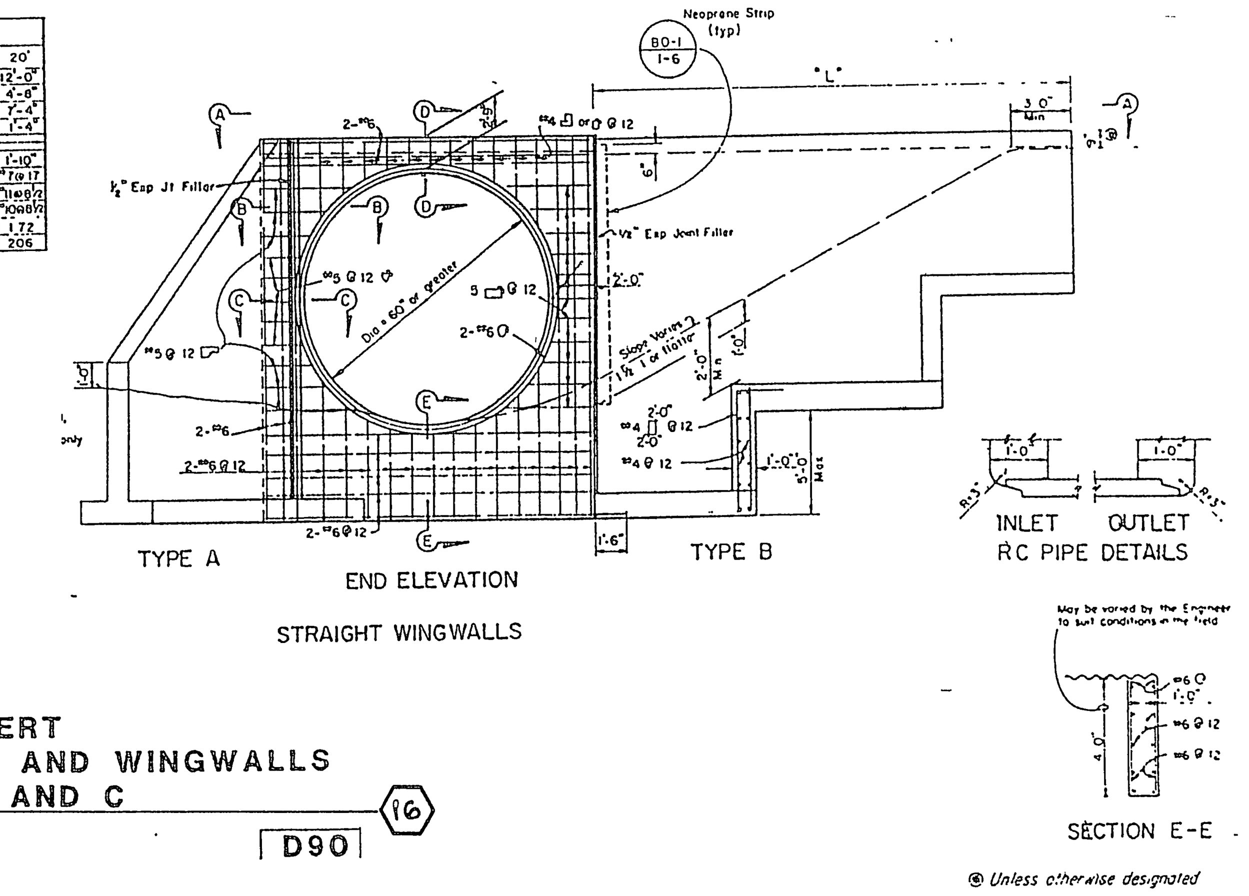

PIPE CULVERT
HEADWALLS, ENDWALLS AND WINGWALLS
TYPES A, B AND C (16)

NO SCALE

D90

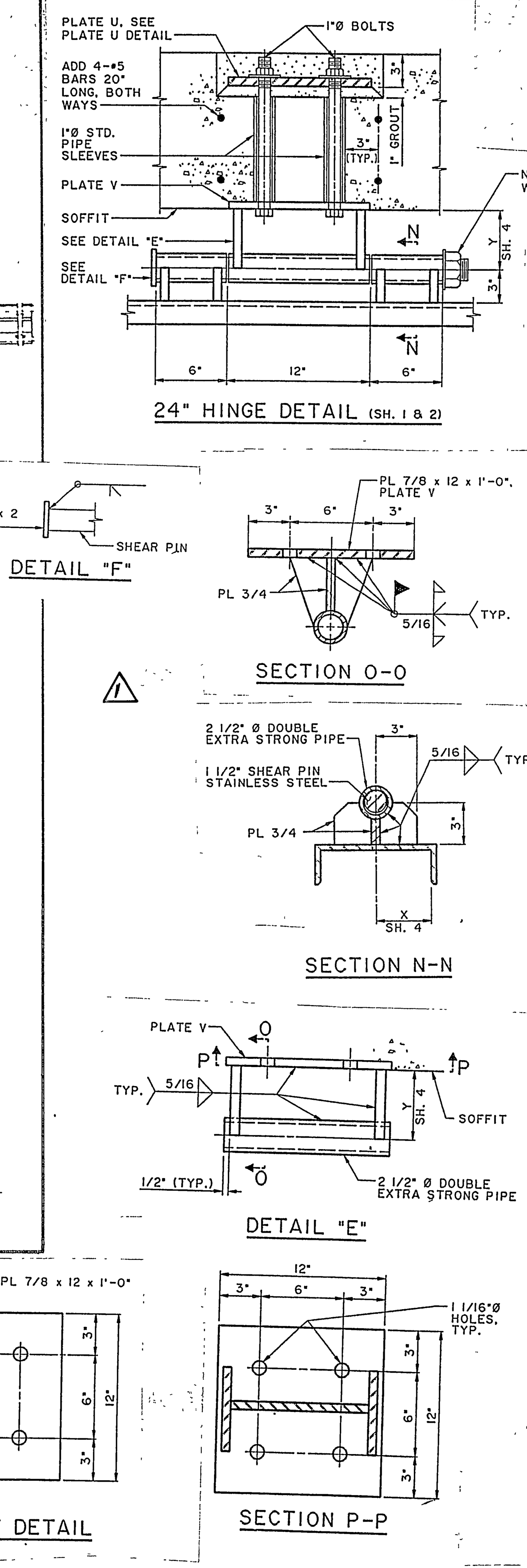

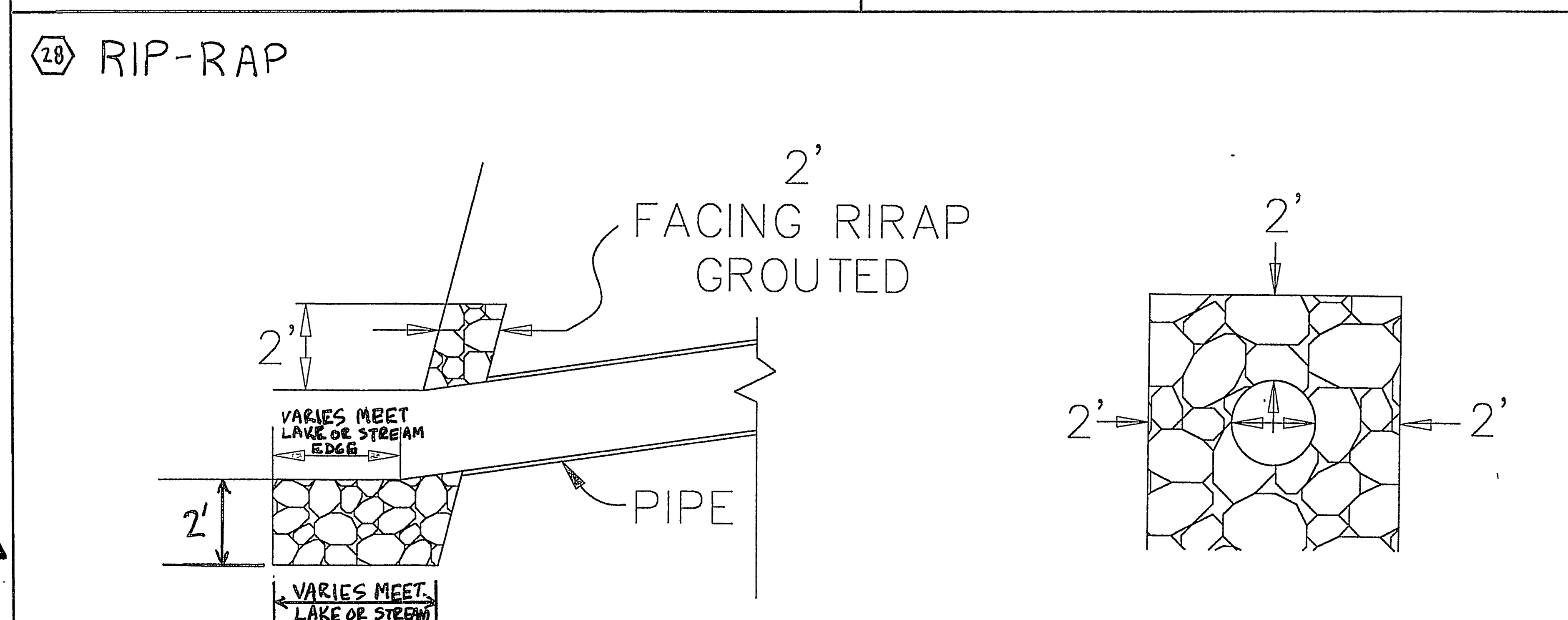

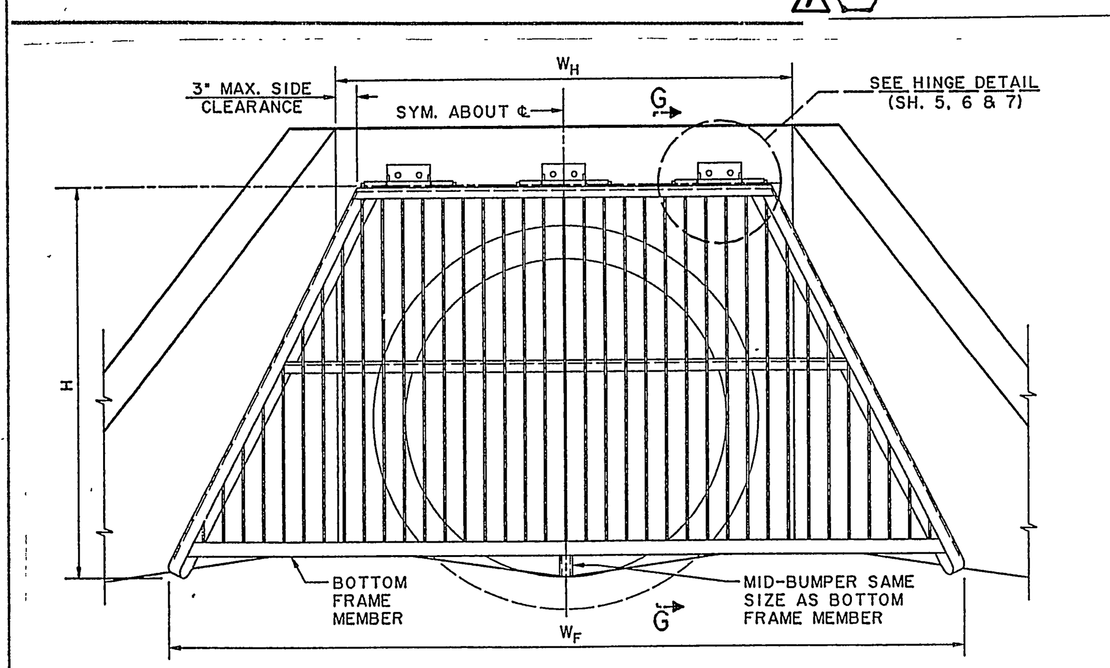

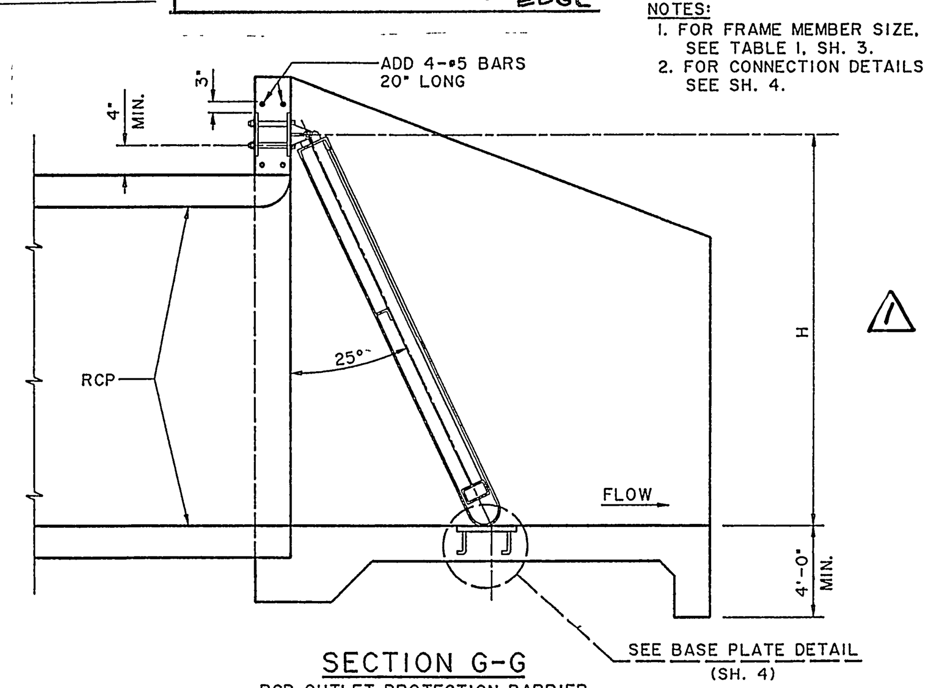

NOTES:
1. FOR FRAME MEMBER SIZE, SEE TABLE I, SH. 3.
2. FOR CONNECTION DETAILS SEE SH. 4.

TABLE I: STANDARD INLET/OUTLET, BOX OR PIPE, RECTANGULAR OR TRAPEZOIDAL SHAPED PROTECTION BARRIERS.
NOTE I: FOR TRAPEZOIDAL SHAPED PROTECTION BARRIERS, USE W_H TO DETERMINE NUMBER AND SIZE OF HINGES, AND USE W_F TO DETERMINE REQUIRED FRAME MEMBER SIZES. (FOR W_H AND W_F, SEE SH. 2)

TABLE I: INLET/OUTLET SLOPED PROTECTION BARRIER

BOX SIZE W x H (FT.)	NO. OF HINGES	HINGE SIZE	VERTICAL BAR SIZE (INCHES)	TOP FRAME MEMBER SIZE	SIDE FRAME MEMBER SIZE	BOTTOM FRAME MEMBER SIZE
4x4	2	12"	1x1/2	C 4x7.25	C 4x7.25	TS 2x2x.250
4x6	2	12"	2x1/2	C 4x7.25	C 4x7.25	TS 2x2x.250
4x8	2	12"	3x1/2	C 5x9	C 5x9	TS 3x3x.250
6x4	2	18"	1x1/2	C 4x7.25	C 4x7.25	TS 2x2x.250
6x6	2	18"	2x1/2	C 4x7.25	C 4x7.25	TS 2.5x2.5x.250
6x8	2	18"	3x1/2	C 5x9	C 5x9	TS 3.5x3.5x.250
6x10	2	18"	4 1/2x1/2	C 6x10.5	C 6x10.5	TS 4.5x4.5x.250
8x4	3	12"	1x1/2	C 4x7.25	C 4x7.25	TS 2x2x.250
8x6	3	12"	2x1/2	C 4x7.25	C 4x7.25	TS 2.5x2.5x.250
8x8	3	12"	3x1/2	C 5x9	C 5x9	TS 3x3x.250
8x10	3	12"	4 1/2x1/2	C 6x10.5	C 6x10.5	TS 4.5x4.5x.250
10x6	3	18"	2x1/2	C 4x7.25	C 4x7.25	TS 2.5x2.5x.250
10x8	3	18"	3x1/2	C 5x9	C 5x9	TS 3.5x3.5x.250
10x10	3	18"	4 1/2x1/2	C 6x10.5	C 6x10.5	TS 4.5x4.5x.250
12x6	3	24"	2x1/2	C 5x9	C 5x9	TS 3x3x.250
12x8	3	24"	3x1/2	C 5x9	C 5x9	TS 3.5x3.5x.250
12x10	3	24"	4 1/2x1/2	C 6x10.5	C 6x10.5	TS 4.5x4.5x.250
14x6	3	24"	2x1/2	C 5x9	C 5x9	TS 3x3x.250
14x8	3	24"	3x1/2	C 6x10.5	C 6x10.5	TS 4x4x.250
14x10	3	24"	4 1/2x1/2	C 7x12.25	C 7x12.25	TS 5x5x.250

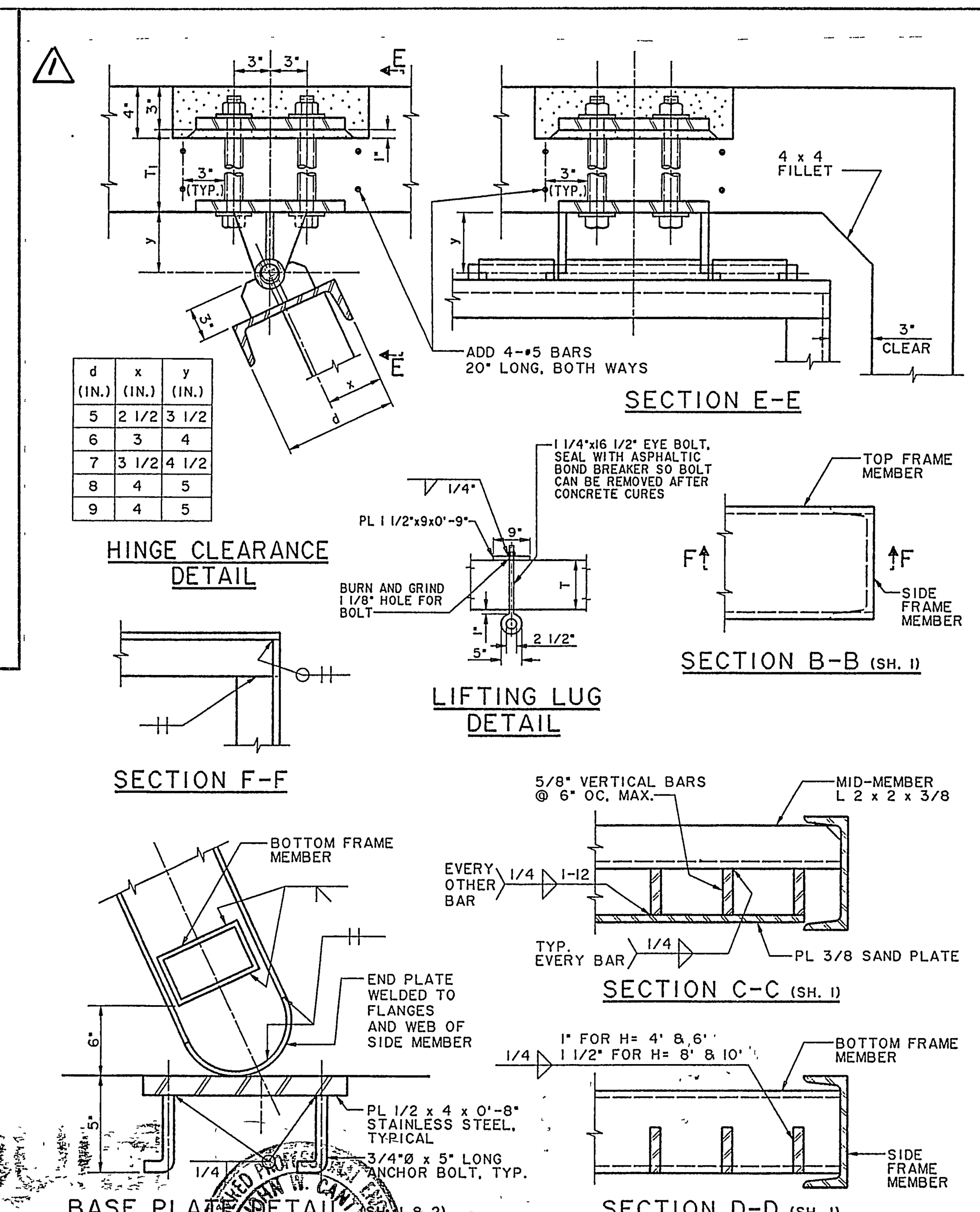

d (IN.)	x (IN.)	y (IN.)
5	2 1/2	3 1/2
6	3	4
7	3 1/2	4 1/2
8	4	5
9	4	5

NOTES

1. WHENEVER RCB SIZE FALLS BETWEEN SIZES SHOWN ON THE TABLE, THE NEXT LARGER SIZE SHALL BE USED.
2. ALL FRAME MEMBERS SHALL BE ASTM A 36 STEEL OR BETTER.
3. ALL HINGE ASSEMBLIES AND BASE PLATES SHALL BE STAINLESS STEEL.
4. THE CONTRACTOR SHALL MAKE ANY NECESSARY MODIFICATIONS TO ALLOW FOR THE SIMPLE REMOVAL OR INSERTION OF HINGE PINS IN ORDER TO INSTALL OR REMOVE THE PROTECTION BARRIER. ENDS OF HINGE PINS SHALL BE THREADED IN ORDER THAT NUTS AND LOCK WASHERS WILL BE FLUSH WITH THE HINGE PIPE. THREADS BEYOND THE NUT FACE SHALL BE DAMAGED TO PREVENT REMOVAL.
5. ALL FRAME MEMBERS SHALL BE GALVANIZED AFTER FABRICATION.
6. IF FIELD WELDS ARE NECESSARY, GALVICON, GALVALLOY OR AGENCY APPROVED EQUAL SHALL BE USED FOR COATING.
7. MID-BUMPER SHALL BE USED FOR 3 HINGED BARRIERS.
8. ANY DEVIATIONS OR MODIFICATIONS TO THIS STANDARD SHALL BE APPROVED BY THE AGENCY.
9. AT OCEAN OUTLETS OR WHEREVER THE TOP SLAB SERVES AS A PUBLIC WALKWAY, THE TOP SLAB THICKNESS SHALL BE INCREASED BY 3" IN ORDER TO PROVIDE A RECESS FOR THE HINGE TOP PLATE. THE RECESS SHALL BE BACKFILLED WITH GROUT AND SMOOTHED AS SHOWN.
10. PROTECTION BARRIERS FOR RCB CONDUITS SHALL BE SLOPED TO SWING OPEN IN THE DIRECTION OF FLOW.
11. MEMBERS SHALL BE SELECTED FROM TABLE I UNLESS OTHERWISE NOTED.
12. DESIGN LOADS:
    A. INLET/OUTLET: BULKED EFD = 85 PCF
    B. OCEAN OUTLETS:
        1. 1800 PSF @ SAND PLATE AREA
        2. 600 PSF @ LOWER OPEN AREA

AS BUILT

Underground Service Alert
Call: TOLL FREE 1 – 800 227–2600
TWO WORKING DAYS BEFORE YOU DIG

PRIVATE ENGINEERING NOTE

CONSTRUCTION CONTRACTOR AGREES THAT IN ACCORDANCE WITH GENERALLY ACCEPTED CONSTRUCTION PRACTICES, CONSTRUCTION CONTRACTOR WILL BE REQUIRED TO ASSUME SOLE AND COMPLETE RESPONSIBILITY FOR JOB SITE CONDITIONS DURING THE COURSE OF CONSTRUCTION OF THE PROJECT, INCLUDING SAFETY OF ALL PERSONS AND PROPERTY; THAT THIS REQUIREMENT SHALL BE MADE TO APPLY CONTINUOUSLY AND NOT BE LIMITED TO NORMAL WORKING HOURS, AND CONSTRUCTION CONTRACTOR FURTHER AGREES TO DEFEND, INDEMNIFY AND HOLD DESIGN PROFESSIONAL HARMLESS FROM ANY AND ALL LIABILITY, REAL OR ALLEGED, IN CONNECTION WITH THE PERFORMANCE OF WORK ON THIS PROJECT, EXCEPTING LIABILITY ARISING FROM THE SOLE NEGLIGENCE OF DESIGN PROFESSIONAL.

REGISTERED PROFESSIONAL ENGINEER JOHN W. CANTY No. 17550 Exp. 6-30-01 CIVIL STATE OF CALIFORNIA

PREPARED UNDER THE DIRECTION OF:
REGISTERED CIVIL ENGINEER NO. 17550
EXPIRATION DATE: 6-30-01 DATE: 8/2/00

CEG CANTY ENGINEERING GROUP, INC.
CIVIL ENGINEERING – PLANNING – SURVEYING
2020 IOWA AVENUE, SUITE 102, P.O. BOX 52050, RIVERSIDE, CA 92517
TEL (909) 683 – 5234 FAX (909) 683 – 5301
CITY OF RIV. BUSINESS TAX ACCT. NO. 69372 EXP. DATE 04-07-00

SCALE: 1"=40'
DATE JULY 1999
BENCH MARK
CITY OF RIV. B.M. E2-M3, PK NAIL & CITY ENGINEER TAG IN N'LY C.B. WING W'LY CURB OF PIERCE ST 1300' S'LY OF AMBS DR
ELEV.=694.231

MARK	REVISIONS	APPR.	DATE
1	REVISED TRASH RACK DETAILS		9/20/00

DESIGNED BY J.D.G. DRAWN BY C.E.A. CHECKED BY J.W.C.

CITY OF RIVERSIDE, CALIFORNIA
DEPARTMENT OF PUBLIC WORKS

APPROVED BY	BY	DATE
PRINCIPAL ENGR.		9/13/2000
PARK DEPARTMENT	—	—
TRAFFIC DIVISION	—	—
DEP. P.W. DIR. ENGR.		9/13/00
ST. SERVICES		9/13/00

APPROVED BY R. McGrath
DIRECTOR OF PUBLIC WORKS
DATE 9-14-2000

IN THE CITY OF RIVERSIDE
LA SIERRA UNIVERSITY
STORM DRAIN PLANS
DETAILS
FOR: GRIFFIN INDUSTRIES

PROJECT NO.
D– 678
SHEET 11 OF 11
FILE NO.: 1104–001

GENERAL STRUCTURAL NOTES

FOUNDATION

1. THE FOUNDATIONS FOR THE ABOVE REFERENCED PROJECT ARE DESIGNED WITH RECOMMENDATIONS FROM GEOSOILS, INC. REPORT # W.O. 2359-A10-SC DATED MAY 24, 2000. ALL RECOMMENDATIONS LISTED WITH IN THIS REPORT REGARDING SITE PREPARATION, GRADING, COMPACTION TESTS, INSPECTIONS ECT. SHALL BE FOLLOWED WITH STRICT ADHERENCE AND SHALL BE COMPLETED PRIOR TO CONSTUCTION. SHOULD THE GEOTECHNICAL REPORT NOT RECOMMEND FOUNDATION PREPARATIONS THE FOLLOWING SPECIFICATIONS SHALL BE FOLLOWED: EXISTING SUB-BASE SHALL BE FREE OF COBBLES LARGER THAN A 12" SPHERE, AND SILT OR CLAY DEPOSITS. EXISTING SUBASE SHALL BE SCARIFIED FOR 1'-0" DEPTH AND COMPACTED TO 95% OF DRY DESTINY AND 12" OF WELL GRADED 3" MINUS GRANULAR MATERIAL BE PLACE ON EXISTING COMPACTED SUBASE AND PROPERLY COMPACTED.

BACKFILL

1. ALL BACKFILL FOR THE ABOVE REFERENCED PROJECT SHALL CONSIST OF MATERIAL AS SPECIFIED IN THE ABOVE REFERENCED GEOTECHNICAL REPORT. HOWEVER, SHOULD THE REPORT NOT RECOMMEND A MATERIAL TYPE THE FOLLOWING SPECIFICATION SHALL BE FOLLOWED. BACKFILL SHALL CONSIST OF WELL GRADED 3" MINUS GRANULAR MATERIAL WITH A MINIMUM OF 6" COVER OVER THE ARCH AND 4'-0" ON EACH SIDE OF THE ARCH OR STEM WALLS.
2. PLACEMENT OF THE FILL AT THE STEM WALLS AND OVER THE ARCH MAY BEGIN WHEN THE CONCRETE STRENGTH HAS REACHED 2800 psi COMPRESSIVE STRENGTH.
3. FILL SHALL BE PLACED IN 8" MAXIMUM VERTICAL LIFTS AND COMPACTED TO 95% OF DRY DENSITY. LIFTS SHALL BE PLACED SYMMETRICALLY EACH SIDE ALONG THE FULL LENGTH OF CULVERT WITH A MAXIMUM BACKFILL LIFT HEIGHT DIFFERENTIAL OF 1'-0".
4. NO EQUIPMENT WEIGHING MORE THAN A 3 YARD RUBBER TIRE LOADER (928 CATERPILLAR OR EQUIVALENT) SHALL BE ALLOWED TO PASS OVER THE STRUCTURE UNTIL THE SPECIFIED FILL IS IN PLACE. HEAVY EQUIPMENT SUCH AS SCRAPERS AND CRANES SHALL NOT BE ALLOWED TO PASS OVER THE STRUCTURE UNLESS SPECIFIC WRITTEN PERMISSION IS OBTAINED BY THE STRUCTURAL ENGINEER.

CONCRETE

1. MIN. 28 DAY COMPRESSIVE STRENGTH, f'c, SHALL BE 4000 PSI (CLASS 650-C-4000) FOR SHOTCRETE. MIN. 28 DAY COMPRESSIVE STRENGTH, f'c, SHALL BE 3250 PSI (CLASS 565-C-3250) FOR ALL OTHER STRUCTURAL CONCRETE.
2. CEMENT SHALL BE TYPE II.
3. ALL CONCRETE SHALL BE NORMAL WEIGHT USING HARDROCK AGGREGATES.
4. MECHANICALLY VIBRATE ALL POURED CONCRETE WHEN PLACED. SLABS ON GRADE NEED NOT BE VIBRATED. REMOVE ALL DEBRIS FROM FORMS BEFORE PLACING CONCRETE. CONCRETE SHALL NOT BE DROPPED THROUGH REINFORCING STEEL SO AS TO CAUSE SEGREGATION OF AGGREGATES. UNCONFINED FALL OF CONCRETE SHALL NOT EXCEED 5 FEET.
5. ALL ITEMS TO BE CAST IN CONCRETE SUCH AS REINFORCING, DOWELS, BOLTS, ANCHORS, SLEEVES, ETC., SHALL BE SECURELY POSITIONED PRIOR TO CONCRETE PLACEMENT.
6. SHOTCRETE PROPORTIONS SHALL BE SELECTED THAT ALLOW SUITABLE PLACEMENT PROCEDURES USING THE DELIVERY EQUIPMENT SELECTED AND SHALL RESULT IN FINISHED IN-PLACE HARDENED SHOTCRETE MEETING THE STRENGTH REQUIREMENTS STATED HERE-IN. COARSE AGGREGATE, IF USED, SHALL NOT EXCEED 3/4 INCH (19). ANY REBOUND OR ACCUMULATED LOOSE AGGREGATE SHALL BE REMOVED FROM THE SURFACES TO BE COVERED PRIOR TO PLACING THE INITIAL OR ANY SUCCEEDING LAYERS OF SHOTCRETE. REBOUND SHALL NOT BE REUSED AS AGGREGATE.

REINFORCING STEEL

1. REINFORCING STEEL SHALL CONFORM TO THE REQUIREMENTS OF ASTM A615. REINFORCING SHALL BE GRADE 60 (FY = 60 KSI) DEFORMED BARS FOR ALL BARS #4 AND LARGER AND ALL BARS USED FOR CONCRETE WALLS. REINFORCING MAY BE GRADE 40 (FY = 40 KSI) DEFORMED BARS FOR ALL BARS #3 AND SMALLER UNLESS NOTED OTHERWISE ON PLANS OR DETAILS. ALL REINFORCING TO BE WELDED SHALL BE ASTM A706, GRADE 60 ALLOY WELDABLE STEEL.
2. ALL DIMENSIONS SHOWING THE LOCATION OF REINFORCING STEEL NOT NOTED AS "CLEAR" OR "CLR" ARE TO CENTER OF STEEL. MINIMUM COVER FOR NON-PRESTRESSED CONCRETE REINFORCING SHALL BE AS FOLLOWS, UNLESS NOTED OTHERWISE ON PLANS OR DETAILS:

EXPOSURE CONDITION:	COVER:	TOLERANCES: (+/-)
FOOTINGS & SLABS ON GRADE:	3"	3/8"
SLABS EXPOSED TO EARTH OR WEATHER:	2"	1/2"
INTERIOR SLABS:	1 1/2"	1/2"

3. LAP SPLICES OF REINFORCING STEEL IN CONCRETE BEAMS, SLABS AND FOOTINGS SHALL BE ACCORDING TO UBC SECTION 1912 OR LAP SCHEDULE WHERE PRESENT, UNLESS NOTED OTHERWISE. STAGGER SPLICES A MINIMUM OF ONE LAP LENGTH. NO TACK WELDING OF REINFORCING BARS ALLOWED. LATEST ACI CODE AND DETAILING MANUAL APPLY. PROVIDE BENT CORNER BARS TO MATCH AND LAP WITH HORIZONTAL BARS AT ALL CORNERS AND INTERSECTIONS PER TYPICAL DETAILS. VERTICAL WALL BARS SHALL BE SPLICED AT OR NEAR FLOOR LINES. SPLICE BARS TOP BARS AT CENTER LINE OF SPAN AND BOTTOM BARS AT THE SUPPORT IN SPANDRELS, BEAMS, GRADE BEAMS, ETC..., UNLESS NOTED OTHERWISE.

REBAR LAP SCHEDULE

BAR	LAP	1.7 LAP
#3	18"	31"
#4	18"	31"
#5	23"	39"
#6	28"	48"
#7	36"	62"
#8	47"	80"
#9	59"	101"
#10	75"	128"
#11	92"	157"

4. ALL REINFORCING SHALL BE BENT COLD. BARS SHALL NOT BE UNBENT AND RE-BENT EXCEPT AS NOTED ON PLAN. FIELD BENDING OF REBAR SHALL NOT BE ALLOWED EXCEPT AS NOTED ON PLAN. BENDS AND HOOKS SHALL CONFORM TO ACI STANDARD 315-80.
5. WELDING OF REINFORCING BARS, METAL INSERTS, AND CONNECTIONS SHALL CONFORM WITH UBC STANDARD 19-2, AND SHALL BE MADE ONLY AT LOCATIONS SHOWN ON PLANS OR DETAILS. ALL REINFORCING SHALL BE BENT COLD. BARS SHALL NOT BE UN-BENT AND RE-BENT.
6. REINFORCING BAR SPACING SHOWN ON PLANS ARE MAXIMUM ON CENTERS. ALL BARS SHALL BE DETAILED AND PLACED PER CRSI SPECIFICATIONS AND HANDBOOK. DOWEL ALL VERTICAL REINFORCING TO FOUNDATION. SECURELY TIE ALL BARS IN LOCATION BEFORE PLACING CONCRETE.

SPECIAL INSPECTIONS

1. THE OWNER SHALL EMPLOY ONE OR MORE SPECIAL INSPECTORS WHO SHALL PROVIDE INSPECTIONS DURING PLACEMENT OF THE BACKFILL, REINFORCEMENT, SHOTCRETING, AND EPOXY DOWELING. THE INSPECTOR SHALL SUBMIT A STATEMENT INDICATING COMPLIANCE WITH THE PLANS AND SPECIFICATIONS.
2. FULL TIME INSPECTION SHALL BE PROVIDED AT NO COST TO THE CITY BY A CITY APPROVED INSPECTOR. TWO WEEKS PRIOR TO CONSTRUCTION THE RESUME OF THE PROPOSED INSPECTOR SHALL BE SUBMITTED TO THE CITY FOR APPROVAL.
3. MATERIAL TESTING FOR SHOTCRETE SHALL BE IN ACCORDANCE WITH SECTION 303-2.4 OF THE STANDARD SPECIFICATION FOR PUBLIC WORKS CONSTRUCTION SHALL BE COMPLETED AT NO COST TO THE CITY.
4. UPON COMPLETION OF CONSTRUCTION, A REPORT COVERING CONSTRUCTION OF THE STRUCTURE SHALL BE PREPARED AND SUBMITTED TO THE CITY. THE REPORT SHALL INCLUDE DAILY LOGS COVERING THE METHOD OF THE STRUCTURE CONSTRUCTION, A SUMMARY OF THE MATERIAL TEST, PROBLEMS ENCOUNTER, AND DOCUMENTATION OF ALL REPAIRS. APPROVAL OF THE REPORT RELEASE OF THE IMPROVEMENT BOND IS CONTINGENT UPON RECEIPT AND APPROVAL OF THE REPORT BY THE CITY.

STANDARD ABBREVIATIONS

AB	ANCHOR BOLT
ACI	AMERICAN CONCRETE INSTITUTE
AISC	AMERICAN INSTITUTE OF STEEL CONSTRUCTION
ANSI	AMERICAN NATIONAL STANDARDS INSTITUTE
ARCH	ARCHITECTURAL
ALT	ALTERNATE
ASTM	AMERICAN SOCIETY FOR TESTING AND MATERIAL
BOT	BOTTOM
BRG	BEARING
C	CHANNEL
℄	CENTER LINE
CLR	CLEAR
COL	COLUMN
CONC	CONCRETE
CONT	CONTINUOUS
DIA OR ø	DIAMETER
DWG	DRAWING
EF	EACH FACE
ELEV	ELEVATION
EQ	EQUAL
EW	EACH WAY
FF	FINISH FLOOR
FLR	FLOOR
FT	FOOT
FTG	FOOTING
GSN	GENERAL STRUCTURAL NOTES
HOR	HORIZONTAL
INFO	INFORMATION
K	KIP (1,000 LBS.)
KSI	KIPS PER SQUARE INCH
L	ANGLE
LL	DOUBLE ANGLE
LLH	LONG LEG HORIZONTAL
LLV	LONG LEG VERTICAL
LO	LOW
MFR	MANUFACTURER
MAX	MAXIMUM
MECH	MECHANICAL
MIN	MINIMUM
MISC	MISCELLANEOUS
NTS	NOT TO SCALE
OC	ON CENTER
OPP	OPPOSITE
PL	PLATE
PLF	POUNDS PER LINEAR FOOT
PSF	POUNDS PER SQUARE FOOT
PSI	POUNDS PER SQUARE INCH
REQ'D	REQUIRED
SIM	SIMILAR
SPEC	SPECIFICATION
STD	STANDARD
T&B	TOP AND BOTTOM
T&G	TONGUE AND GROVE
TO	TOP OF
TOC	TOP OF CONCRETE
TOD	TOP OF DECK
TOF	TOP OF FOOTING
TOL	TOP OF LEDGER
TOP	TOP OF PANEL
TOS	TOP OF STEEL
TOW	TOP OF WALL
TYP	TYPICAL
UBC	UNIFORM BUILDING CODE
UNO	UNLESS OTHERWISE NOTED
VERT	VERTICAL
W	WIDE FLANGE
W/	WITH
W/O	WITHOUT
WT	WEIGHT

KEYNOTES:

1. FINISHED GRADE
2. LIMITS OF BACKFILL ZONE
3. COMPACTED MATERIAL PER GEOTECHNICAL REPORT

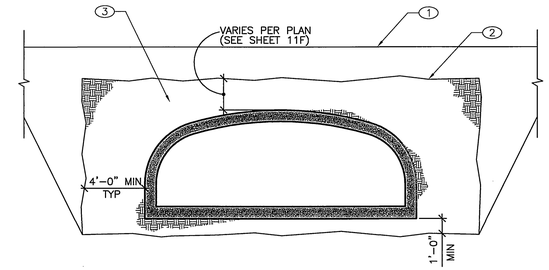

NOTES:

A. SEE GEOTECHNICAL REPORT #W.O. 2359-10-SC BY GEOSOILS, INC. FOR BACKFILL SPECIFICATIONS.

B. FOR FILL HEIGHT LESS THAN 2'-0" THE FINISH GRADE SHALL BE THE BOUNDARY LINE FOR THE BACK FILL ZONE.

C. BACKFILLING OPERATIONS WITHIN THE BACK FILL ZONE SHALL BE PERFORMED IN LIFTS OF 8" OR LESS (LOOSE DEPTH).

D. MAXIMUM DRY DENSITY SHALL BE DETERMINED BY AASHTO T-99 OR OTHER APPROVED METHODS.

E. BACKFILL SHALL BE COMPACTED IN LAYERS UNTIL THE DENSITY IS NOT LESS THAN 95% OF THE MAXIMUM DRY DENSITY.

1 TYPICAL BACKFILL REQUIREMENTS (ELEVATION)
NO SCALE

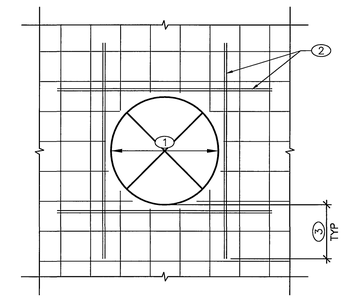

KEYNOTES:

1. OPENING DIAMETER 4'-0" MAX
2. NUMBER OF ADDED BARS EQUAL TO THE NUMBER OF BARS INTERRUPTED BY OPENING. ROUND UP TO AN EQUAL NUMBER OF BARS EACH SIDE OF OPENING
3. EXTEND BARS PAST EDGE OF OPENING EQUAL TO LAP LENGTH OF BAR PER LAP SCHEDULE

NOTE:

LOCATION AS SHOWN PER CIVIL DRAWINGS AS OCCURS

2 TYPICAL OPENING IN ARCHED CULVERT
NO SCALE

SHEET INDEX

SHEET NO.	SHEET TITLE
S0.1a	GSN, STD ABBREVIATIONS, SHEET INDEX
S1.1b	PLAN VIEWS
S2.1c	ELEVATIONS
S3.1d	SECTIONS

REGISTERED PROFESSIONAL ENGINEER JASON SOUTH C 59678 EXP DEC. 31, 2003 CIVIL STATE OF CALIFORNIA

FEB 20 2001

AS BUILT

SEAL:

DESIGNED: JS
DRAWN: KH
CHECKED: DW
APPROVED: WM

SSEDCO
Specialty Structures Engineering & Design Company
E-mail@SSEDCo.com, 1553 E. Lincoln Rd. Idaho Falls, ID 83401

PROJECT: HYDRO-ARCH BY PHOENIX GUNITE
980 MARY CREST ROAD, UNIT B
HENDERSON, NV 89014

LA SIERRA UNIVERSITY
RIVERSIDE, CA
FOR
PHOENIX GUNITE

SHEET TITLE: GENERAL STRUCTURAL NOTES

DATE: DECEMBER 5, 2000
PROJECT NUMBER: 00202
SHEET NUMBER: S0.1

Underground Service Alert
Call: TOLL FREE
1 - 800
227-2600
TWO WORKING DAYS BEFORE YOU DIG

PRIVATE ENGINEERING NOTE

CONSTRUCTION CONTRACTOR AGREES THAT IN ACCORDANCE WITH GENERALLY ACCEPTED CONSTRUCTION PRACTICES, CONSTRUCTION CONTRACTOR WILL BE REQUIRED TO ASSUME SOLE AND COMPLETE RESPONSIBILITY FOR JOB SITE CONDITIONS DURING THE COURSE OF CONSTRUCTION OF THE PROJECT, INCLUDING SAFETY OF ALL PERSONS AND PROPERTY; THAT THIS REQUIREMENT SHALL BE MADE TO APPLY CONTINUOUSLY AND NOT BE LIMITED TO NORMAL WORKING HOURS, AND CONSTRUCTION CONTRACTOR FURTHER AGREES TO DEFEND, INDEMNIFY AND HOLD DESIGN PROFESSIONAL HARMLESS FROM ANY AND ALL LIABILITY, REAL OR ALLEGED, IN CONNECTION WITH THE PERFORMANCE OF WORK ON THIS PROJECT, EXCEPTING LIABILITY ARISING FROM THE SOLE NEGLIGENCE OF DESIGN PROFESSIONAL.

PREPARED UNDER THE DIRECTION OF:
JASON SOUTH
REGISTERED CIVIL ENGINEER NO. C 59678
EXPIRATION DATE: DEC 31, 2003 DATE: 2/20/01

CEG CANTY ENGINEERING GROUP, INC.
CIVIL ENGINEERING - PLANNING - SURVEYING
2020 IOWA AVENUE, SUITE 102, P.O. BOX 52050, RIVERSIDE, CA 92517
TEL (909) 683 - 5234 FAX (909) 683 - 5301
CITY OF RIV. BUSINESS TAX ACCT. NO. 69372 EXP. DATE 04-07-00

SCALE: AS SHOWN
DATE: JULY 1999

BENCH MARK:
CITY OF RIV. B.M. E2-M3, PK NAIL & CITY ENGINEER TAG IN N'LY C.B. WING, W'LY CURB OF PIERCE ST. 1300' S'LY OF AMBS DR.
ELEV.=694.231

MARK	REVISIONS	APPR.	DATE

DESIGNED BY J.D.G. DRAWN BY C.E.A. CHECKED BY J.W.C.

CITY OF RIVERSIDE, CALIFORNIA
DEPARTMENT OF PUBLIC WORKS

APPROVED BY	BY	DATE
PRINCIPAL ENGR.		3/20/00
PARK DEPARTMENT	—	—
TRAFFIC DIVISION	—	—
DEP. P.W. DIR. ENGR.		3/20/01
ST. SERVICE		3/20/01

APPROVED BY R. McSwain
DIRECTOR OF PUBLIC WORKS
DATE 4-3-2001

IN THE CITY OF RIVERSIDE
LA SIERRA UNIVERSITY
STORM DRAIN
TITLE SHEET
FOR: GRIFFIN INDUSTRIES

PROJECT NO. D-678
SHEET 11a OF 11
FILE NO.: 1104-001

THESE PLANS, DRAWINGS AND DESIGNS ARE THE EXCLUSIVE PROPERTY OF ASSOCIA / PHOENIX GUNITE AND SHALL NOT BE REPRODUCED IN ANY FORM WITHOUT WRITTEN CONSENT. ALL RIGHTS ARE RESERVED. COPYRIGHT 2000 SSEDCO / PHOENIX GUNITE

H:\WCEG CLIENT DIRECTORY\GRIFFIN-INDUSTRIES\#LaSierra\STRUCTURAL PLANS\SO.1.dwg, 02/13/2001 11:44:48 AM, CANTY ENGINEERING GROUP INC., C. ANGUIANO

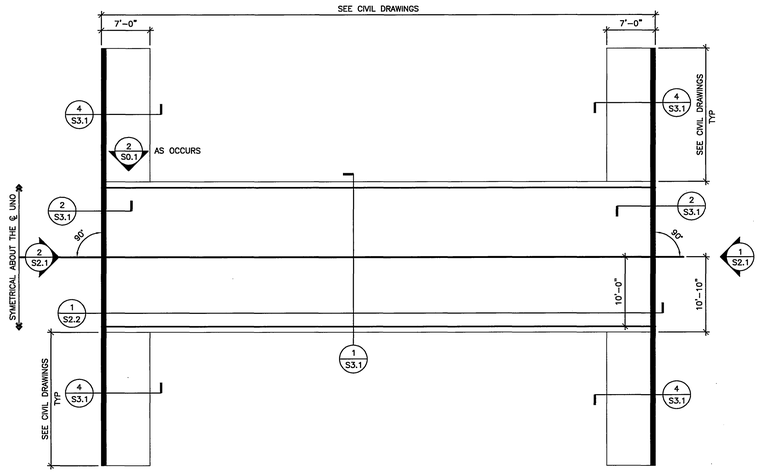

PLAN VIEW – COLLETT AVENUE

SCALE: 1/8"=1'-0"

DIMENSIONS AND STATIONS SHOWN ARE APPROXIMATED BASED ON THE CIVIL DRAWINGS. REFERENCE CIVIL DRAWINGS BY CEG CANTY ENGINEERING GROUP, INC. FOR EXACT DIMENSIONS AND STATIONING. (SHEET 11F)

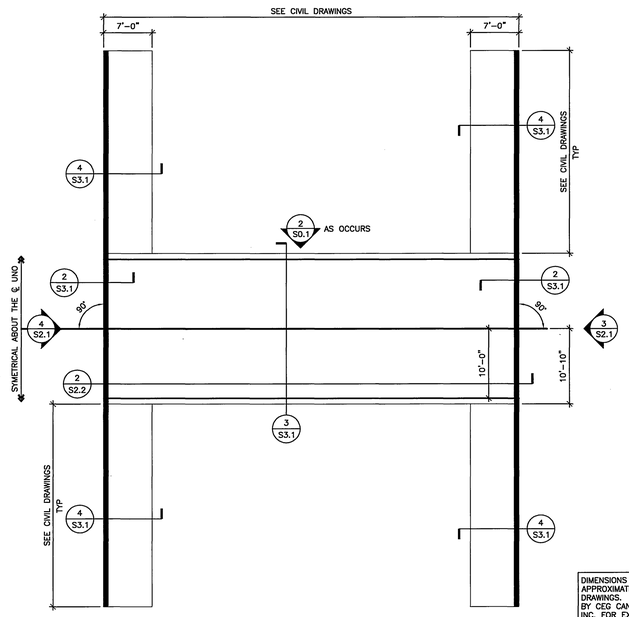

PLAN VIEW – PIERCE STREET

SCALE: 1/8"=1'-0"

DIMENSIONS AND STATIONS SHOWN ARE APPROXIMATED BASED ON THE CIVIL DRAWINGS. REFERENCE CIVIL DRAWINGS BY CEG CANTY ENGINEERING GROUP, INC. FOR EXACT DIMENSIONS AND STATIONING. (SHEET 11F)

FEB 20 2001

REGISTERED PROFESSIONAL ENGINEER JASON SOUTH C 59678 EXP DEC. 31, 2003 CIVIL STATE OF CALIFORNIA

AS BUILT

Underground Service Alert
Call: TOLL FREE
1 – 800
227–2600
TWO WORKING DAYS BEFORE YOU DIG

PRIVATE ENGINEERING NOTE

CONSTRUCTION CONTRACTOR AGREES THAT IN ACCORDANCE WITH GENERALLY ACCEPTED CONSTRUCTION PRACTICES, CONSTRUCTION CONTRACTOR WILL BE REQUIRED TO ASSUME SOLE AND COMPLETE RESPONSIBILITY FOR JOB SITE CONDITIONS DURING THE COURSE OF CONSTRUCTION OF THIS PROJECT, INCLUDING SAFETY OF ALL PERSONS AND PROPERTY; THAT THIS REQUIREMENT SHALL BE MADE TO APPLY CONTINUOUSLY AND NOT BE LIMITED TO NORMAL WORKING HOURS, AND CONSTRUCTION CONTRACTOR FURTHER AGREES TO DEFEND, INDEMNIFY AND HOLD DESIGN PROFESSIONAL HARMLESS FROM ANY AND ALL LIABILITY, REAL OR ALLEGED, IN CONNECTION WITH THE PERFORMANCE OF WORK ON THIS PROJECT, EXCEPTING LIABILITY ARISING FROM THE SOLE NEGLIGENCE OF DESIGN PROFESSIONAL.

PREPARED UNDER THE DIRECTION OF:
REGISTERED CIVIL ENGINEER NO. C59678
EXPIRATION DATE: DEC. 31, 2003 DATE: 2/20/01

CEG CANTY ENGINEERING GROUP, INC.
CIVIL ENGINEERING – PLANNING – SURVEYING
2020 IOWA AVENUE, SUITE 102, P.O. BOX 52050, RIVERSIDE, CA 92517
TEL (909) 683 – 5234 FAX (909) 683 – 5301
CITY OF RIV. BUSINESS TAX ACCT. NO. 69372 EXP. DATE 04–07–00

SCALE: AS SHOWN
DATE: JULY 1999

BENCH MARK:
CITY OF RIV. B.M. E2–M3, PK NAIL & CITY ENGINEER TAG IN N'LY C.B. WING, W'LY CURB OF PIERCE ST. 1300' S'LY OF AMBS DR. ELEV.=694.231

MARK	REVISIONS	APPR.	DATE

DESIGNED BY J.D.G. DRAWN BY C.E.A. CHECKED BY J.W.C.

CITY OF RIVERSIDE, CALIFORNIA
DEPARTMENT OF PUBLIC WORKS

APPROVED BY	BY	DATE
PRINCIPAL ENGR.		4/4/01
PARK DEPARTMENT		
TRAFFIC DIVISION		
DEP. P.W. DIR. ENGR.		3/30/01
ST. SERVICE		3/30/01

APPROVED BY R. M. Scott
DIRECTOR OF PUBLIC WORKS
DATE 4-3-2001

IN THE CITY OF RIVERSIDE
LA SIERRA UNIVERSITY
STORM DRAIN
TITLE SHEET
FOR: GRIFFIN INDUSTRIES

PROJECT NO. D–678
SHEET 11b OF 11
FILE NO.: 1104–001

DESIGNED: JS
DRAWN: KH
CHECKED: DW
APPROVED: WM

SEAL:

SSEDCO
Specialty Structures Engineering & Design Company
E-mail@SSEDCo.com, 1553 E. Lincoln Rd. Idaho Falls, ID 83401

HYDRO-ARCH
BY PHOENIX GUNITE
980 MARY CREST ROAD, UNIT B
HENDERSON, NV 89014

PROJECT: LA SIERRA UNIVERSITY
RIVERSIDE, CA
FOR
PHOENIX GUNITE

SHEET TITLE: GENERAL STRUCTURAL NOTES

DATE: DECEMBER 5, 2000
PROJECT NUMBER: 00202
SHEET NUMBER: S1.1

H:\CEG CLIENT DIRECTORY\GRIFFIN-INDUSTRIES\LaSierra\STRUCTURAL PLANS\S1.1.dwg, 02/13/2001 11:53:13 AM, CANTY ENGINEERING GROUP INC., C. ANGULANO

NOTE:

REFERENCE CIVIL DRAWINGS BY CEG CANTY ENGINEERS GROUP, INC. FOR EXACT WALL LENGTHS AND HEIGHTS (SHEET 11F)

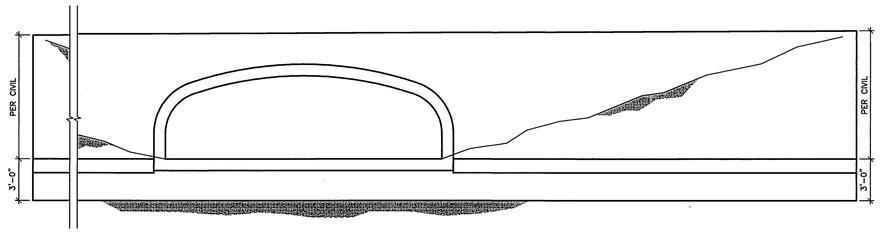

3 ELEVATION AT CULVERT INLET – PIERCE STREET
NO SCALE

NOTE:

REFERENCE CIVIL DRAWINGS BY CEG CANTY ENGINEERS GROUP, INC. FOR EXACT WALL LENGTHS AND HEIGHTS (SHEET 11F)

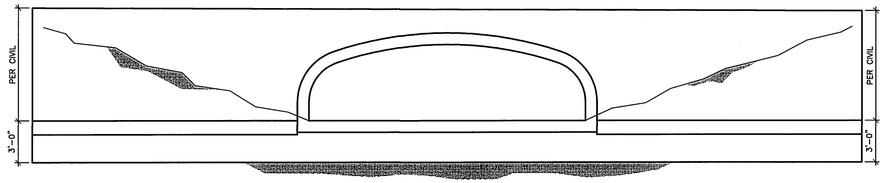

1 ELEVATION AT CULVERT INLET – COLLETT AVENUE
NO SCALE

NOTE:

REFERENCE CIVIL DRAWINGS BY CEG CANTY ENGINEERS GROUP, INC. FOR EXACT WALL LENGTHS AND HEIGHTS (SHEET 11F)

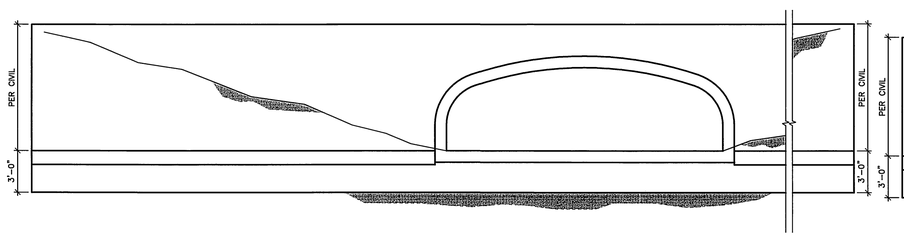

4 ELEVATION AT CULVERT OUTLET – PIERCE STREET
NO SCALE

NOTE:

REFERENCE CIVIL DRAWINGS BY CEG CANTY ENGINEERS GROUP, INC. FOR EXACT WALL LENGTHS AND HEIGHTS (SHEET 11F)

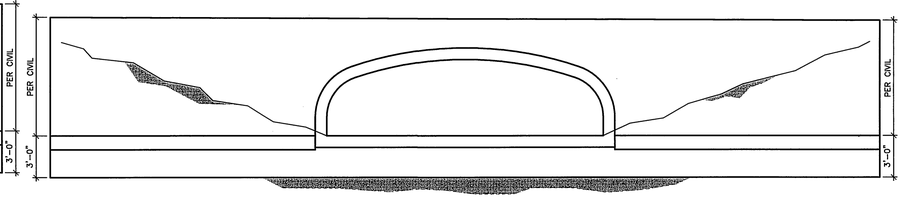

2 ELEVATION AT CULVERT OUTLET – COLLETT AVENUE
NO SCALE

FEB 20 2001

REGISTERED PROFESSIONAL ENGINEER JASON SOUTH C 59678 EXP DEC. 31, 2003 CIVIL STATE OF CALIFORNIA

AS BUILT

Underground Service Alert
Call: TOLL FREE 1 – 800 227-2600
TWO WORKING DAYS BEFORE YOU DIG

PRIVATE ENGINEERING NOTE

CONSTRUCTION CONTRACTOR AGREES THAT IN ACCORDANCE WITH GENERALLY ACCEPTED CONSTRUCTION PRACTICES, CONSTRUCTION CONTRACTOR WILL BE REQUIRED TO ASSUME SOLE AND COMPLETE RESPONSIBILITY FOR JOB SITE CONDITIONS DURING THE COURSE OF CONSTRUCTION OF THE PROJECT, INCLUDING SAFETY OF ALL PERSONS AND PROPERTY; THAT THIS REQUIREMENT SHALL BE MADE TO APPLY CONTINUOUSLY AND NOT BE LIMITED TO NORMAL WORKING HOURS, AND CONSTRUCTION CONTRACTOR FURTHER AGREES TO DEFEND, INDEMNIFY AND HOLD DESIGN PROFESSIONAL HARMLESS FROM ANY AND ALL LIABILITY, REAL OR ALLEGED, IN CONNECTION WITH THE PERFORMANCE OF WORK ON THIS PROJECT, EXCEPTING LIABILITY ARISING FROM THE SOLE NEGLIGENCE OF DESIGN PROFESSIONAL.

PREPARED UNDER THE DIRECTION OF:
JASON SOUTH
REGISTERED CIVIL ENGINEER NO. C59678
EXPIRATION DATE: DEC 31, 2003 DATE: 2/20/01

CEG CANTY ENGINEERING GROUP, INC.
CIVIL ENGINEERING – PLANNING – SURVEYING
2020 IOWA AVENUE, SUITE 102, P.O. BOX 52050, RIVERSIDE, CA 92517
TEL (909) 683 – 5234 FAX (909) 683 – 5301
CITY OF RIV. BUSINESS TAX ACCT. NO. 69372 EXP. DATE 04-07-00

SCALE: AS SHOWN
DATE: JULY 1999

BENCH MARK:
CITY OF RIV. B.M. E2-M3, PK NAIL & CITY ENGINEER TAG IN N'LY C.B. WING, W'LY CURB OF PIERCE ST. 1300' S'LY OF AMBS DR.
ELEV.=694.231

MARK	REVISIONS	APPR.	DATE

DESIGNED BY J.D.G. DRAWN BY C.E.A. CHECKED BY J.W.C.

CITY OF RIVERSIDE, CALIFORNIA
DEPARTMENT OF PUBLIC WORKS

APPROVED BY	BY	DATE
PRINCIPAL ENGR.	[illegible]	3/24/2001
PARK DEPARTMENT	—	—
TRAFFIC DIVISION	—	—
DEP. P.W. DIR. ENGR.	[illegible]	3/30/01
ST. SERVICE	[illegible]	3/30/01

APPROVED BY R. McGrath
DIRECTOR OF PUBLIC WORKS
DATE 4-3-2001

IN THE CITY OF RIVERSIDE
LA SIERRA UNIVERSITY
STORM DRAIN
TITLE SHEET
FOR: GRIFFIN INDUSTRIES

PROJECT NO. D-678
SHEET 11c OF 11
FILE NO.: 1104-001

SEAL:

DESIGNED: JS
DRAWN: KH
CHECKED: DW
APPROVED: WM

SSEDCO
Specialty Structures Engineering & Design Company
E-mail@SSEDCo.com, 1553 E. Lincoln Rd. Idaho Falls, ID 83401

HYDRO-ARCH
BY PHOENIX GUNITE
980 MARY CREST ROAD, UNIT B
HENDERSON, NV 89014

PROJECT: LA SIERRA UNIVERSITY
RIVERSIDE, CA
FOR
PHOENIX GUNITE

SHEET TITLE: GENERAL STRUCTURAL NOTES

DATE: DECEMBER 5, 2000
PROJECT NUMBER: 00202
SHEET NUMBER: S2.1

H:\WC82 CLIENT DIRECTORY\GRIFFIN-INDUSTRIES\WLaSierra\STRUCTURAL PLANS\S2.1.dwg, 02/13/2001 11:54:41 AM, CANTY ENGINEERING GROUP INC., C. ANGUIANO

NOTE:

REFERENCE CIVIL DRAWINGS BY CEG CANTY ENGINEERS GROUP, INC. FOR EXACT WALL AND FILL HEIGHTS (SHEET 11F)

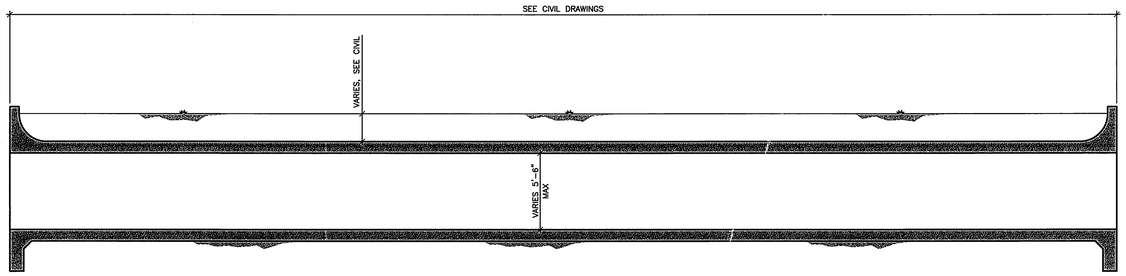

1 CROSS SECTION OF 20'-0"x5'-6" CULVERT– COLLETT AVENUE
NO SCALE

NOTE:

REFERENCE CIVIL DRAWINGS BY CEG CANTY ENGINEERS GROUP, INC. FOR EXACT WALL AND FILL HEIGHTS (SHEET 11F)

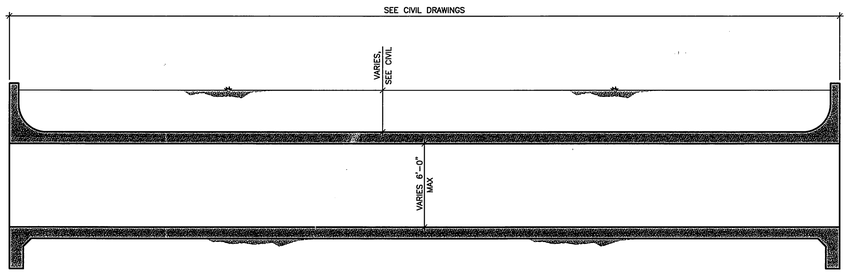

2 CROSS SECTION OF 20'-0'x5'-6" CULVERT – PIERCE STREET
NO SCALE

FEB 20 2001

REGISTERED PROFESSIONAL ENGINEER
JASON SOUTH
C 59670
EXP. DEC. 31 2001
CIVIL
STATE OF CALIFORNIA

AS BUILT

SEAL:

DESIGNED: JS
DRAWN: KH
CHECKED: DW
APPROVED: WM

Specialty Structures Engineering & Design Company
E-mail@SSEDCo.com, 1553 E. Lincoln Rd. Idaho Falls, ID 83401

HYDRO-ARCH
BY PHOENIX GUNITE
980 MARY CREST ROAD, UNIT B
HENDERSON, NV 89014

PROJECT: LA SIERRA UNIVERSITY
RIVERSIDE, CA
FOR
PHOENIX GUNITE

SHEET TITLE: GENERAL STRUCTURAL NOTES

DATE: DECEMBER 5, 2000
PROJECT NUMBER: 00202
SHEET NUMBER: S2.2

Underground Service Alert
Call: TOLL FREE
1 – 800
227–2600
TWO WORKING DAYS BEFORE YOU DIG

PRIVATE ENGINEERING NOTE

CONSTRUCTION CONTRACTOR AGREES THAT IN ACCORDANCE WITH GENERALLY ACCEPTED CONSTRUCTION PRACTICES, CONSTRUCTION CONTRACTOR WILL BE REQUIRED TO ASSUME SOLE AND COMPLETE RESPONSIBILITY FOR JOB SITE CONDITIONS DURING THE COURSE OF CONSTRUCTION OF THE PROJECT, INCLUDING SAFETY OF ALL PERSONS AND PROPERTY; THAT THIS REQUIREMENT SHALL BE MADE TO APPLY CONTINUOUSLY AND NOT BE LIMITED TO NORMAL WORKING HOURS, AND CONSTRUCTION CONTRACTOR FURTHER AGREES TO DEFEND, INDEMNIFY AND HOLD DESIGN PROFESSIONAL HARMLESS FROM ANY AND ALL LIABILITY, REAL OR ALLEGED, IN CONNECTION WITH THE PERFORMANCE OF WORK ON THIS PROJECT, EXCEPTING LIABILITY ARISING FROM THE SOLE NEGLIGENCE OF DESIGN PROFESSIONAL.

PREPARED UNDER THE DIRECTION OF:
JASON SOUTH
REGISTERED CIVIL ENGINEER NO. C59678
EXPIRATION DATE: DEC 31, 2003 DATE: 2/20/01

CEG CANTY ENGINEERING GROUP, INC.
CIVIL ENGINEERING – PLANNING – SURVEYING
2020 IOWA AVENUE, SUITE 102, P.O. BOX 52050, RIVERSIDE, CA 92517
TEL (909) 683 – 5234 FAX (909) 683 – 5301
CITY OF RIV. BUSINESS TAX ACCT. NO. 69372 EXP. DATE 04–07–00

SCALE: AS SHOWN
DATE: JULY 1999

BENCH MARK:
CITY OF RIV. B.M. E2–M3, PK NAIL & CITY ENGINEER TAG IN N'LY C.B. WING, W'LY CURB OF PIERCE ST. 1300' S'LY OF AMBS DR.
ELEV.=694.231

MARK	REVISIONS	APPR.	DATE

DESIGNED BY J.D.G. DRAWN BY C.E.A. CHECKED BY J.W.C.

CITY OF RIVERSIDE, CALIFORNIA
DEPARTMENT OF PUBLIC WORKS

APPROVED BY	BY	DATE
PRINCIPAL ENGR.	[illegible]	3/20/00
PARK DEPARTMENT		
TRAFFIC DIVISION		
DEP. P.W. DIR. ENGR.	[illegible]	3/30/01
ST. SERVICE	[illegible]	3/14/01

APPROVED BY
R. McGrath
DIRECTOR OF PUBLIC WORKS
DATE 4-3-2001

IN THE CITY OF RIVERSIDE
LA SIERRA UNIVERSITY
STORM DRAIN
TITLE SHEET
FOR: GRIFFIN INDUSTRIES

PROJECT NO. D–678
SHEET 11d OF 11
FILE NO.: 1104–001

THESE PLANS, DRAWINGS AND DESIGNS ARE THE EXCLUSIVE PROPERTY OF SSEDCo / PHOENIX GUNITE AND SHALL NOT BE REPRODUCED IN ANY FORM WITHOUT WRITTEN CONSENT. ALL RIGHTS ARE RESERVED. COPYRIGHT 2000 SSEDCo / PHOENIX GUNITE.

H:\CEG CLIENT DIRECTORY\GRIFFIN-INDUSTRIES\LaSierra\WSTRUCTURAL PLANS\WS2.2.dwg, 02/13/2001 11:55:50 AM, CANTY ENGINEERING GROUP INC., C. ANGUIANO

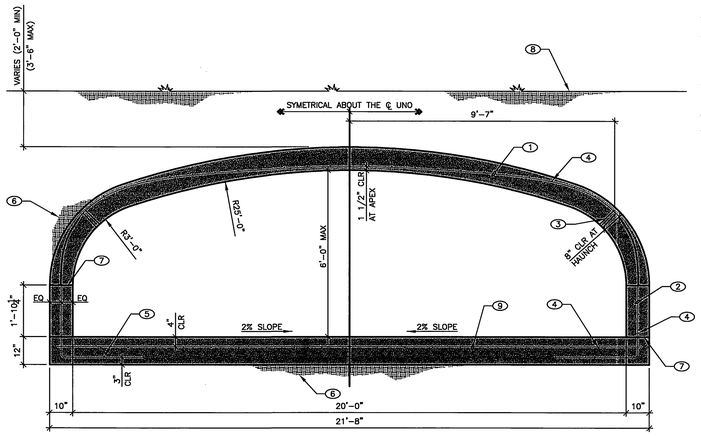

KEYNOTES:

1. #5 AT 7" O.C. TRANSVERSE
2. #5 DOWEL AT 7" O.C. W/ 36" HOOK AT BASE
3. REBAR CHAIR POINT
4. #4 AT 10" O.C. LONGITUDINAL
5. (3) #5 LONGITUDINAL
6. SEE GEOTECHNICAL REPORT LISTED IN THE CSN FOR COMPACTED FILL REQUIREMENTS
7. ROUGHIN CONSTRUCTION JOINT, AT CONTRACTORS OPTION (TYP)
8. FINAL GRADE
9. #5 AT 7" O.C. TRANSVERSE

3 CULVERT SECTION AT 20'-0" x 6'-0" CULVERT (LINE "M"- PIERCE ST)
NO SCALE

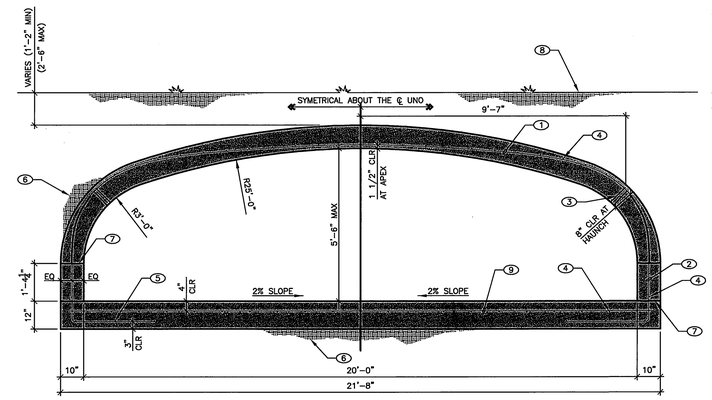

KEYNOTES:

1. #5 AT 7" O.C. TRANSVERSE
2. #5 DOWEL AT 7" O.C. W/ 36" HOOK AT BASE
3. REBAR CHAIR POINT
4. #4 AT 10" O.C. LONGITUDINAL
5. (3) #5 LONGITUDINAL
6. SEE GEOTECHNICAL REPORT LISTED IN THE CSN FOR COMPACTED FILL REQUIREMENTS
7. ROUGHIN CONSTRUCTION JOINT, AT CONTRACTORS OPTION (TYP)
8. FINAL GRADE
9. #5 AT 7" O.C. TRANSVERSE

1 CULVERT SECTION AT 20'-0" x 5'-6" CULVERT (LINE "N"- COLLETT AVE.)
NO SCALE

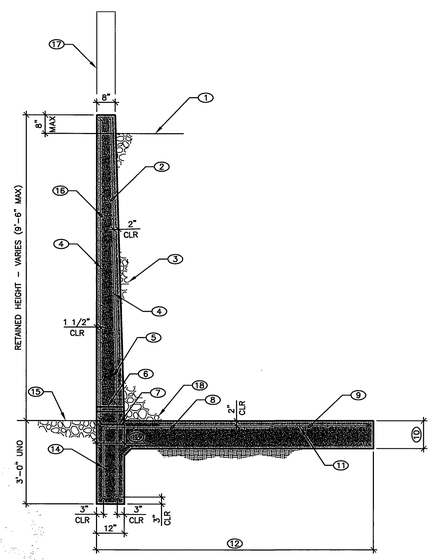

4 WING WALL SECTION
NO SCALE

KEYNOTES:

1. LEVEL BACKFILL
2. #4 VERT AT 12" O.C. INSIDE FACE
3. BACKFILL MATERIAL AND PROCEDURES PER GEOTECHNICAL REPORT, AND PROVIDE 12" MIN FREE DRAIN GRANULAR BACKFILL FULL HEIGHT OF WALL
4.

RETAINED HEIGHT	HORIZONTAL REINFORCING
UP TO - 9'-6"	#4 HORIZ AT 18" O.C. EF

5.

RETAINED HEIGHT	VERT REINFORCING
UP TO - 8'-0"	#5 VERT x 7'-0" AT 10" O.C.
8'-1" - 9'-6"	#5 VERT x 8'-6" AT 8" O.C.

6. 2"ø WEEP HOLE AT 4'-0" O.C. MAX
7.

RETAINED HEIGHT	KEY SIZE
UP TO - 8'-0"	1 1/2" DEEP x 5 1/2"
8'-1" - 9'-6"	1 1/2" DEEP x 6 1/2"

8.

RETAINED HEIGHT	MAIN TRANS FTG REINF *
UP TO - 9'-6"	#5 TRANS AT 10" O.C.

* LENGTH OF MAIN TRANS REINF SHALL BE 2/3 OF FOOTING WIDTH MIN. AT CONTRACTOR'S OPTION, MAIN TRANS REINF MAY BE EXTENDED FULL FOOTING WIDTH.

9. #4 TRANS REINF AT 12" O.C., SEE LAP SCHEDULE
10.

RETAINED HEIGHT	FOOTING THICKNESS
UP TO - 9'-6"	12"

11. #4 CONT AT 12" O.C.
12. FOOTING WIDTH, SEE PLAN SHT S1.1 (11 of 11)
13.

RETAINED HEIGHT	WALL THICKNESS AT BASE
UP TO - 9'-6"	10"

14. #4 CONT AT 12" O.C. EF
15. GRADE PER CIVIL DWGS, TOP OF FOOTING TO MATCH TOP OF GRADE
16. #4 VERT AT 18" O.C. OUTSIDE FACE
17. PARAPET WALL AND ATTACHMENT BY OTHERS
18. 12"x12" OF FREE DRAINING BACKFILL W/ FILTER FABRIC

NOTE:

AT CONTRACTOR'S OPTION, VERT REINF PER KEYNOTE 5 MAY BE EXTENDED FULL WALL HEIGHT AND VERT REINF PER KEYNOTE 2 MAY BE ELIMINATED

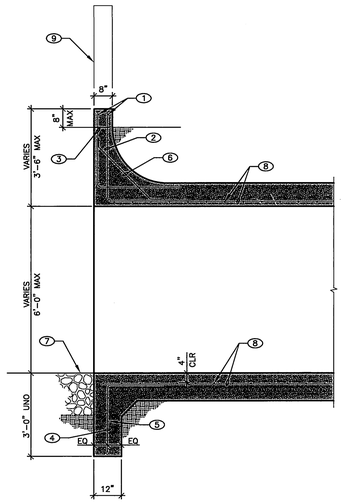

KEYNOTES:

1. #4 HORIZ EA FACE AT 10" O.C.
2. #4 VERT DOWEL AT 10" O.C. W/ 36" LONG HOOK AT BASE
3. #4 VERT AT 18" O.C. W/ 36" LONG HOOK AT BASE
4. #4 AT 12" O.C. 24" / 30"
5. #4 AT 12" O.C.
6. #4 AT 10" O.C. PLACE RADIALLY AROUND ARCH
7. PER CIVIL DRAWINGS
8. CULVERT REINFORCING, SEE SECTION 1/S3.1 AND 3/S3.1
9. PARAPET WALL AND ATTACHMENT BY OTHERS

2 HEADWALL SECTION
NO SCALE

FEB 20 2001
REGISTERED PROFESSIONAL ENGINEER
JASON SOUTH
C 59678
EXP DEC. 31 2003
CIVIL
STATE OF CALIFORNIA

AS BUILT

Underground Service Alert
Call: TOLL FREE
1 - 800
227-2600
TWO WORKING DAYS BEFORE YOU DIG

PRIVATE ENGINEERING NOTE

CONSTRUCTION CONTRACTOR AGREES THAT IN ACCORDANCE WITH GENERALLY ACCEPTED CONSTRUCTION PRACTICES, CONSTRUCTION CONTRACTOR WILL BE REQUIRED TO ASSUME SOLE AND COMPLETE RESPONSIBILITY FOR JOB SITE CONDITIONS DURING THE COURSE OF CONSTRUCTION OF THE PROJECT, INCLUDING SAFETY OF ALL PERSONS AND PROPERTY; THAT THIS REQUIREMENT SHALL BE MADE TO APPLY CONTINUOUSLY AND NOT BE LIMITED TO NORMAL WORKING HOURS, AND CONSTRUCTION CONTRACTOR FURTHER AGREES TO DEFEND, INDEMNIFY AND HOLD DESIGN PROFESSIONAL HARMLESS FROM ANY AND ALL LIABILITY, REAL OR ALLEGED, IN CONNECTION WITH THE PERFORMANCE OF WORK ON THIS PROJECT, EXCEPTING LIABILITY ARISING FROM THE SOLE NEGLIGENCE OF DESIGN PROFESSIONAL.

PREPARED UNDER THE DIRECTION OF:
REGISTERED CIVIL ENGINEER NO. C59678
EXPIRATION DATE: DEC 31, 2003 DATE: 2/20/01

CEG CANTY ENGINEERING GROUP, INC.
CIVIL ENGINEERING - PLANNING - SURVEYING
2020 IOWA AVENUE, SUITE 102, P.O. BOX 52050, RIVERSIDE, CA 92517
TEL (909) 683 - 5234 FAX (909) 683 - 5301
CITY OF RIV. BUSINESS TAX ACCT. NO. 69372 EXP. DATE 04-07-00

SCALE: AS SHOWN
DATE: JULY 1999
BENCH MARK:
CITY OF RIV. B.M. E2-M3, PK NAIL & CITY ENGINEER TAG IN N'LY CURB WING, W'LY CURB OF PIERCE ST. 1300' S'LY OF AMBS DR.
ELEV=694.231

MARK	REVISIONS	APPR.	DATE

DESIGNED BY J.D.G. DRAWN BY C.E.A. CHECKED BY J.W.C.

CITY OF RIVERSIDE, CALIFORNIA
DEPARTMENT OF PUBLIC WORKS

APPROVED BY	BY	DATE
PRINCIPAL ENGR.		
PARK DEPARTMENT		
TRAFFIC DIVISION		
DEP. P.W. DIR. ENGR.		3/2/01
ST. SERVICE		3/9/01

APPROVED BY R. M. Scott
DIRECTOR OF PUBLIC WORKS
DATE 4-3-2001

IN THE CITY OF RIVERSIDE
LA SIERRA UNIVERSITY
STORM DRAIN
TITLE SHEET
FOR: GRIFFIN INDUSTRIES

PROJECT NO. D-678
SHEET 11e OF 11
FILE NO: 1104-001

SEAL:

DESIGNED: JS
DRAWN: KH
CHECKED: DW
APPROVED: WM

SSEDCO
Specialty Structures Engineering & Design Company
E-mail@SSEDCo.com, 1553 E. Lincoln Rd. Idaho Falls, ID 83401

HYDRO-ARCH
BY PHOENIX GUNITE
980 MARY CREST ROAD, UNIT B
HENDERSON, NV 89014

PROJECT: LA SIERRA UNIVERSITY
RIVERSIDE, CA
FOR
PHOENIX GUNITE

SHEET TITLE: GENERAL STRUCTURAL NOTES

DATE: DECEMBER 5, 2000
PROJECT NUMBER: 00202
SHEET NUMBER: S3.1

H:\CEG CLIENT DIRECTORY\GRIFFIN-INDUSTRIES\W LaSierra\WSTRUCTURAL PLANS\WS3.1.DWG, 02/13/2001 11:56:41 AM, CANTY ENGINEERING GROUP INC., C. ANGUIANO
THESE PLANS, DRAWINGS AND DESIGNS ARE THE EXCLUSIVE PROPERTY OF SSEDCo / PHOENIX GUNITE AND SHALL NOT BE REPRODUCED IN ANY FORM WITHOUT WRITTEN CONSENT. ALL RIGHTS ARE RESERVED. COPYRIGHT 2000 SSEDCo / PHOENIX GUNITE

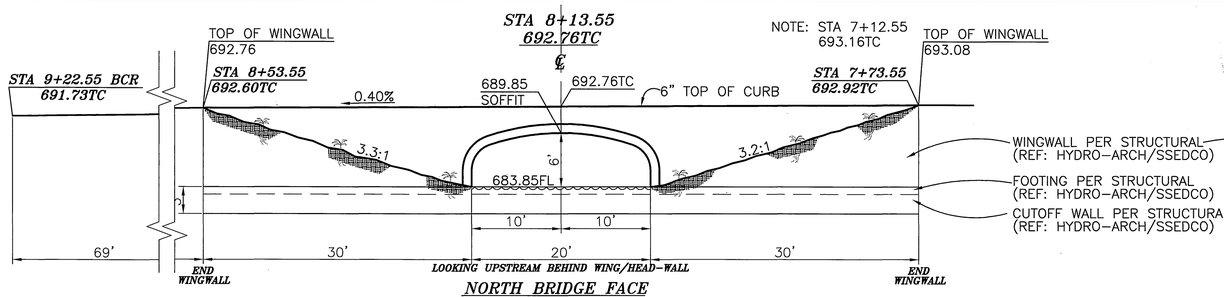

NORTH BRIDGE FACE
PIERCE STREET
(LINE "M")
SCALE HORIZ: 1"=8' VERT:1"=8'

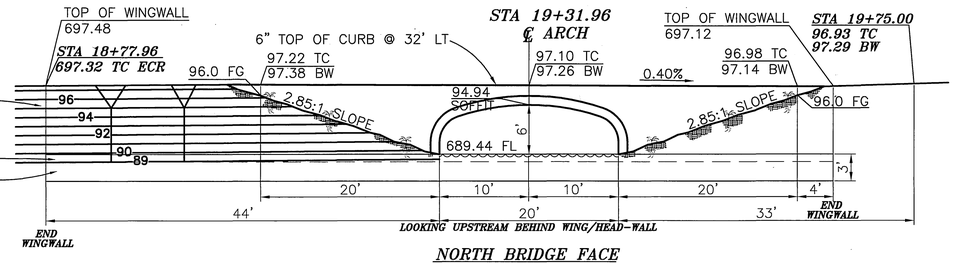

NORTH BRIDGE FACE
COLLETT AVENUE
(LINE "N")
SCALE HORIZ: 1"=8' VERT:1"=8'

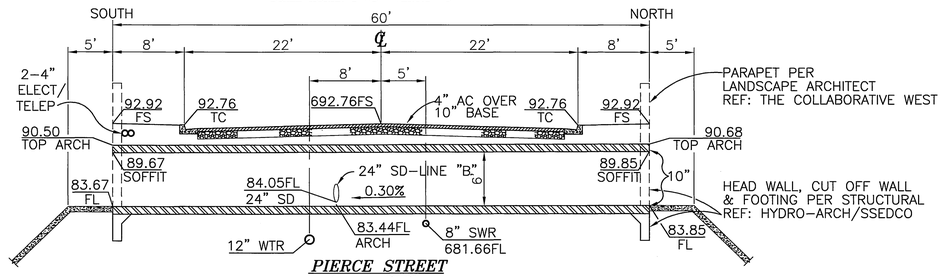

PIERCE STREET
(LINE "M")
SCALE 1"=8'

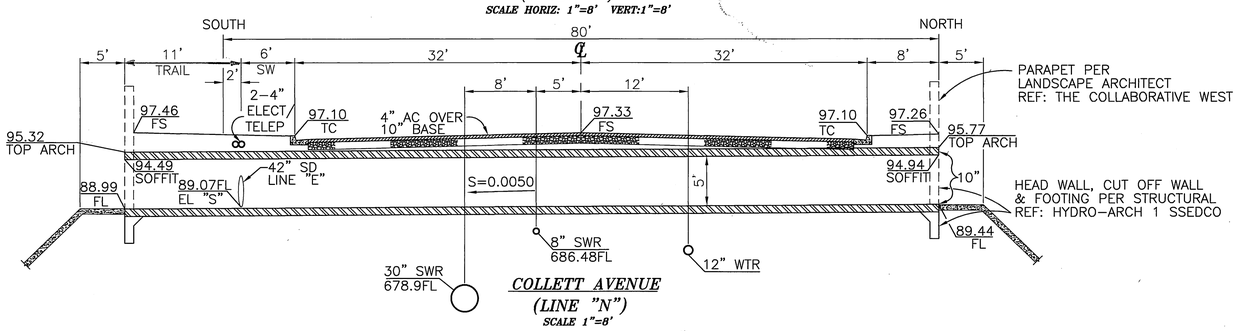

COLLETT AVENUE
(LINE "N")
SCALE 1"=8'

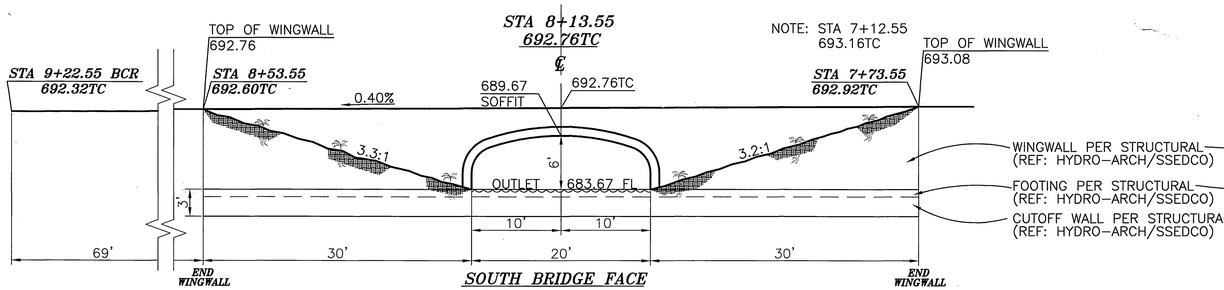

SOUTH BRIDGE FACE
PIERCE STREET
(LINE "M")
SCALE HORIZ: 1"=8' VERT:1"=8'

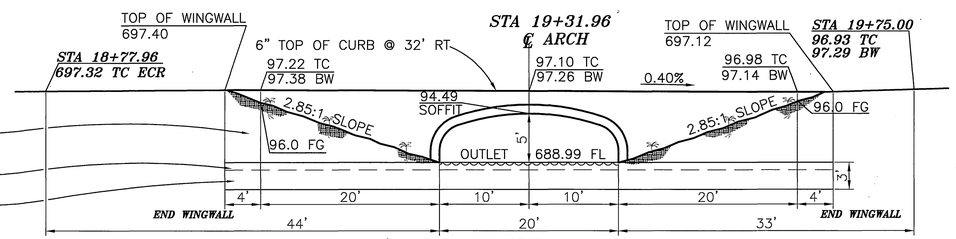

SOUTH BRIDGE FACE
COLLETT AVENUE
(LINE "N")
SCALE HORIZ: 1"=8' VERT:1"=8'

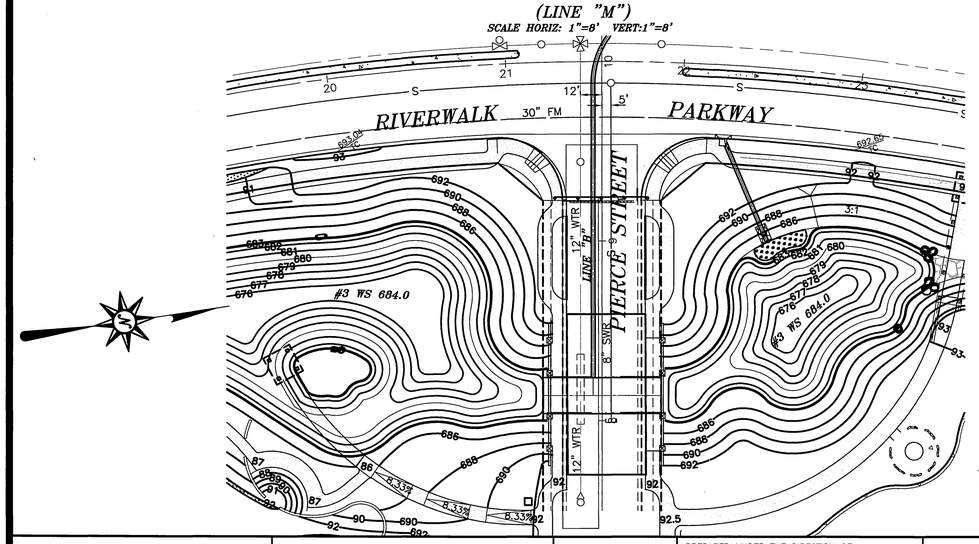

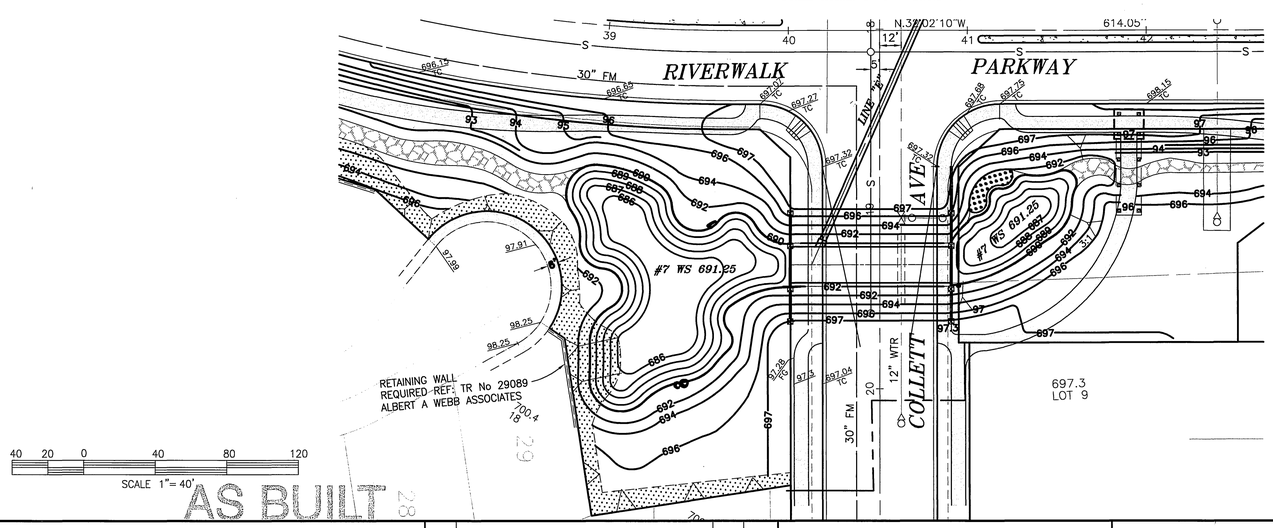

Underground Service Alert
Call: TOLL FREE
1 - 800
227-2600
TWO WORKING DAYS BEFORE YOU DIG

PRIVATE ENGINEERING NOTE

CONSTRUCTION CONTRACTOR AGREES THAT IN ACCORDANCE WITH GENERALLY ACCEPTED CONSTRUCTION PRACTICES, CONSTRUCTION CONTRACTOR WILL BE REQUIRED TO ASSUME SOLE AND COMPLETE RESPONSIBILITY FOR JOB SITE CONDITIONS DURING THE COURSE OF CONSTRUCTION OF THE PROJECT, INCLUDING SAFETY OF ALL PERSONS AND PROPERTY; THAT THIS REQUIREMENT SHALL BE MADE TO APPLY CONTINUOUSLY AND NOT BE LIMITED TO NORMAL WORKING HOURS, AND CONSTRUCTION CONTRACTOR FURTHER AGREES TO DEFEND, INDEMNIFY AND HOLD DESIGN PROFESSIONAL HARMLESS FROM ANY AND ALL LIABILITY, REAL OR ALLEGED, IN CONNECTION WITH THE PERFORMANCE OF WORK ON THIS PROJECT, EXCEPTING LIABILITY ARISING FROM THE SOLE NEGLIGENCE OF DESIGN PROFESSIONAL.

REGISTERED PROFESSIONAL ENGINEER
JOHN W. CANTY
No. 17550
Exp. 6-30-01
CIVIL
STATE OF CALIFORNIA

PREPARED UNDER THE DIRECTION OF:
REGISTERED CIVIL ENGINEER NO. 17550
EXPIRATION DATE: 6-30-01 DATE: 3/14/01

CEG CANTY ENGINEERING GROUP, INC.
CIVIL ENGINEERING - PLANNING - SURVEYING
2020 IOWA AVENUE, SUITE 102, P.O. BOX 52050, RIVERSIDE, CA 92517
TEL (909) 683 - 5234 FAX (909) 683 - 5301
CITY OF RIV. BUSINESS TAX ACCT. NO. 69372 EXP. DATE 04-07-00

SCALE: AS SHOWN
DATE: JULY 1999

BENCH MARK:
CITY OF RIV. B.M. E2-M3, PK NAIL & CITY ENGINEER TAG IN N'LY C.B. WING, W'LY CURB OF PIERCE ST. 1300' S'LY OF AMBS DR.
ELEV.=694.231

MARK	REVISIONS	APPR.	DATE

DESIGNED BY P.J.C. DRAWN BY C.C. CHECKED BY J.W.C.

CITY OF RIVERSIDE, CALIFORNIA
DEPARTMENT OF PUBLIC WORKS

APPROVED BY	BY	DATE
PRINCIPAL ENGR.		3/14/01
PARK DEPARTMENT		
TRAFFIC DIVISION		
P.W. ENGR. MGR.		3/30/01
ST. SERVICES		4/4/01

APPROVED BY
R. Mike Beratto
DIRECTOR OF PUBLIC WORKS
DATE 4-3-2001

IN THE CITY OF RIVERSIDE
LA SIERRA UNIVERSITY
STORM DRAIN
BRIDGE DETAILS

FOR: GRIFFIN INDUSTRIES

PROJECT NO.
D-678
SHEET 11f OF 11
FILE NO.: 1104-001