STORM DRAIN NOTES

1. Quantities shown are for information only and the City of Riverside is not responsible for their accuracy.
2. Construction shall be in accordance with City of Riverside Dept. of Public Works Standard Drawings, Its Supplemental Notes and the Standard Specifications for Public Works Construction, Current Edition.
3. It shall be the responsibility of the contractor to clear the right of way in accordance with the provisions of law as it affects each utility including irrigation lines and appurtenances and at no cost to the City
4. Notice to contractor. The existence and location of any underground utility pipes or structures shown on these plans were obtained by a search of the available records. To the best of our knowledge there are no existing utilities exept as shown on these plans. The contractor is required to take precautionary measures to protect the utility lines shown and any other lines not of record or not shown on these plans.
5. The private engineer signing these plans is responsible for assuring the accuracy and acceptability of the work hereon. In the event of discrepancies arising during construction, the private engineer shall be responsible for determining an acceptable solution and revising the plans for approval by the City.
6. The contractor shall call in a locations request to UNDERGROUND SERVICE ALERT (USA), Phone No. 1-800-227-2600, two working days before digging No construction permit will be issued by the Public Works Department involving excavation for underground facilities unless the applicant has been provided an Inquiry Identification Number by U.S.A.
7. The developer shall be responsible for preserving or re-establishing and referencing survey monuments destroyed, disturbed or buried as a result of construction shown hereon.
8. All embankment fill shall be compacted to minimum of 90% maximum dry density and shall be of an approved quality.
9. Before the Rip-Rap is accepted by the City as placed, at the outlet of any drainage structure, it shall be tested under flows as close as possible to design conditions with water obtained from fire hydrants in the immediate area
10. All flagged elevations shall be staked in the field by the private engineer.
11. Contractor agrees that he shall assume sole and complete responsibility for job site conditions during the course of construction of this project, including safety of all persons and property; that this requirement shall apply continuously and not be limited to normal working hours; and that the contractor shall defend, indemnify and hold the owner and the engineer harmless from any and all liability, real or alleged, in connection with performance of work on this project, excepting for liability arising from the sole negligence of the owner or the engineer.
12. The concrete cover on the inside of all concrete pipe must be increased to provide a min. of 1.5" over the reinforcing when the design velocities exceed 20 fps. The concrete design strength in these reaches shall be:
    fc = 5000 psi. for velocities exceeding 20 fps. and
    fc = 6000 psi. for velocities exceeding 30 fps.
13. Any traffic control striping obliterated and/or badly worn during construction shall be restored by the contractor within five days after notification from the City Inspector.
14. No person shall perform any construction activity or install any objects within the public rights-of-way or easements of the City of Riverside without a valid Construction Permit or, a Street Opening Permit or an Encroachment Permit issued by the City's Public Works Department.
15. The contractor will contact QUESTAR SOUTHERN TRAILS PIPELINE Bill Lamb at (909) 849-9396) and Underground Service Alert (USA) at least 48 hours prior to any type of work within any pipeline easement.
16. County of Riverside Note:
    Work contained within these plans for county right of way shall not commence until an encroachment permit or grading permit is obtained.

CONSTRUCTION NOTES

		QUANTITIES
1	CONSTRUCT 18" RCP (D-2000)	764 LF
2	CONSTRUCT 24" RCP (D-2000)	40 LF
3	CONSTRUCT 36" RCP (D-2400)	67 LF
4	CONSTRUCT 36" RCP (D-1600)	484 LF
5	CONSTRUCT CATCH BASIN PER CITY OF RIVERSIDE STD. DWG. NO 405.	7 EA
6	CONSTRUCT JUNCTION STRUCTURE "C" PER CITY OF RIVERSIDE STD. DWG NO. 422.	1 EA
7	CONSTRUCT MANHOLE "EZ" PER CITY OF RIVERSIDE STD. DWG. NO 431.	2 EA
8	CONSTRUCT MANHOLE "JM" PER CITY OF RIVERSIDE STD. DWG NO. 432.	1 EA
9	CONSTRUCT ENERGY DISSIPATOR PER DETAIL A ON SHEET 4	1 EA
10	CONSTRUCT 1/4 TON GROUTED RIP-RAP (DIMENSION AS SHOWN ON PLAN).	32 CY
11	CONSTRUCT CONCRETE COLLAR PER CITY OF RIVERSIDE STD. DWG NO. 424	5 EA
12	CONSTRUCT CALTRANS D-89 HEADWALL PER DETAIL "B" ON SHEET 4.	2 EA
13	CONSTRUCT TRASH RACK PER DETAIL "C" ON SHEET 4.	2 EA
14	CONSTRUCT 42" RCP (D-1400)	281 LF
15	CONSTRUCT CURB OUTLET PER CITY OF RIVERSIDE STD. DWG. NO 410.	1 EA
16	CONSTRUCT JUNCTION STRUCTURE "B" PER CITY OF RIVERSIDE STD. DWG NO. 421.	4 EA
17	CONSTRUCT C.S.P. INLET PER CITY OF RIVERSIDE STD. DWG. NO. 412	1 EA
18	CONSTRUCT 42" RCP (D-1700)	129 LF
19	CONSTRUCT 42" RCP (D-2000)	55 LF

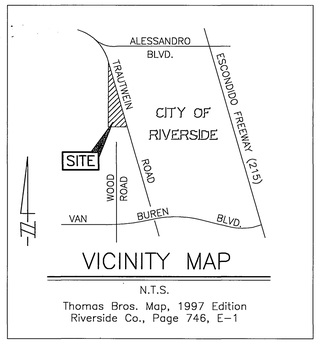

VICINITY MAP

N.T.S.

Thomas Bros. Map, 1997 Edition
Riverside Co., Page 746, E-1

POR. OF T3S, R4W SEC 17

CAST-IN-PLACE CONCRETE PIPE NOTES:

1 CAST IN PLACE CONCRETE PIPE CONSTRUCTION SHALL BE IN ACCORDANCE WITH 306-4 OF THE STANDARD SPECIFICATION FOR PUBLIC WORKS CONSTRUCTION.

2 FULL TIME INSPECTION SHALL BE PROVIDED AT NO COST TO THE CITY BY A CITY INSPECTOR. TWO WEEKS PRIOR TO CONSTRUCTION THE RESUME OF THE PROPOSED INSPECTOR SHALL BE SUBMITTED TO THE CITY FOR APPROVAL

3 TRENCHING SHALL BE COMPLETED WITH A CURVED BUCKET TO CREATE A SEMI-CIRCULAR TRENCH.

4 MATERIAL TESTING IN ACCORDANCE WITH SECTION 306-4.7 OF THE STANDARD SPECIFICATION FOR PUBLIC WORKS CONSTRUCTION SHALL BE COMPLETED AT NO COST TO THE CITY

5 REINFORCED CONCRETE PIPE SHALL BE USED 10 FEET ON EACH SIDE OF ALL CUT-FILL TRANSITION

6 UPON COMPLETION OF CONSTRUCTION, A REPORT COVERING CONSTRUCTION OF THE PIPE SHALL BE PREPARED AND SUBMITTED TO THE CITY. THE REPORT SHALL INCLUDE A STANDARD VHS VIDEO INSPECTION FOT EH PIPE, DAILY LOGS COVERING THE METHOD OF PIPE CONSTRUCTION, A SUMMARY OF THE MATERIAL TESTS, PROBLEMS ENCOUNTER, AND DOCUMENTATION OF ALL REPAIRS. APPROVAL OF THE REPORT ANDRELEASE OF THE IMPROVEMENT BOND IS CONTINGENT UPON RECEIPT AND APPROVAL OF THE REPORT BY THE CITY.

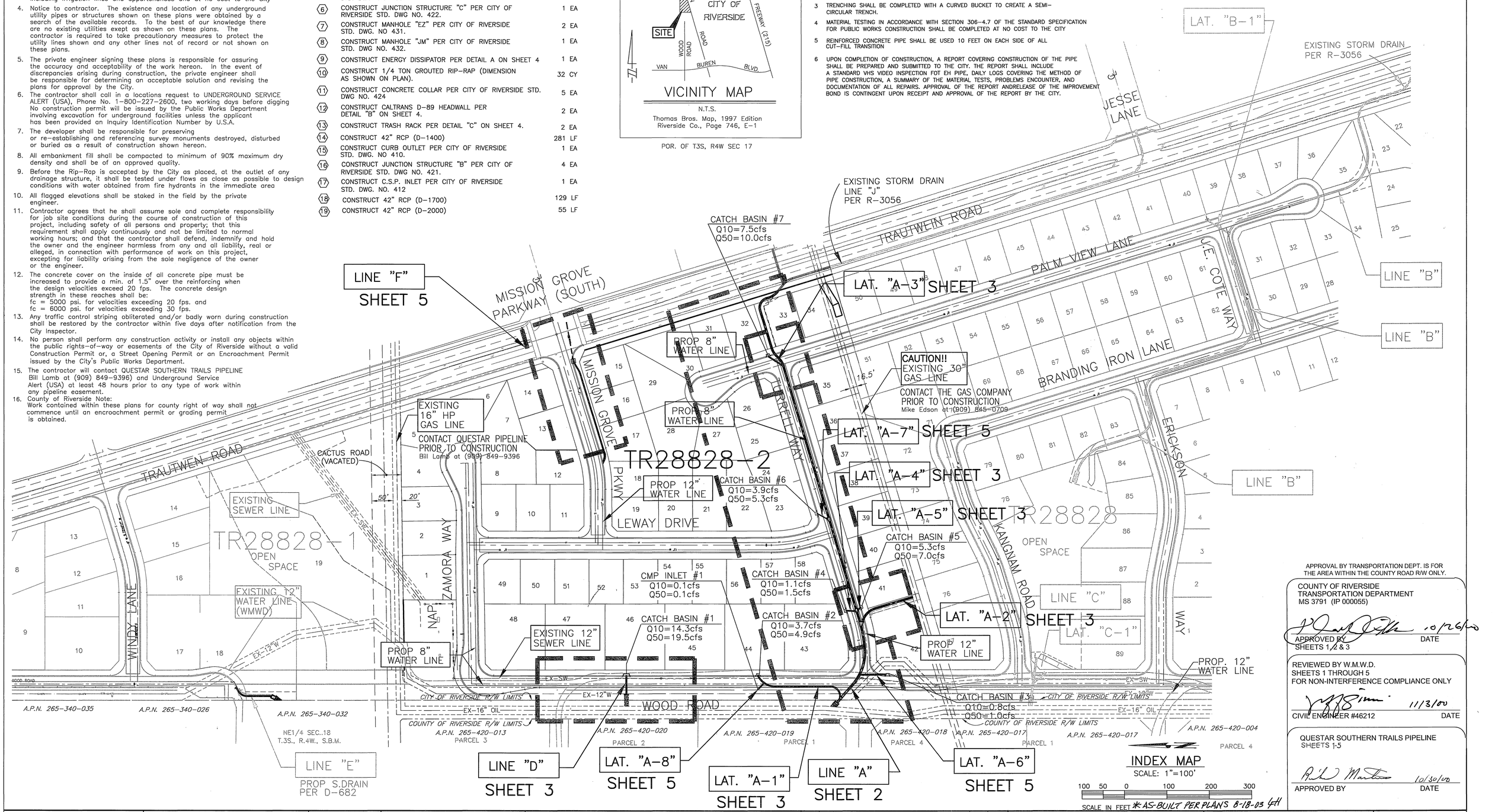

* AS-BUILT PER PLANS 8-18-03 GH

APPROVAL BY TRANSPORTATION DEPT. IS FOR THE AREA WITHIN THE COUNTY ROAD R/W ONLY.

COUNTY OF RIVERSIDE
TRANSPORTATION DEPARTMENT
MS 3791 (IP 000055)

APPROVED BY _____ DATE 10/26/00
SHEETS 1,2 & 3

REVIEWED BY W.M.W.D.
SHEETS 1 THROUGH 5
FOR NON-INTERFERENCE COMPLIANCE ONLY

CIVIL ENGINEER #46212 _____ DATE 11/3/00

QUESTAR SOUTHERN TRAILS PIPELINE
SHEETS 1-5

APPROVED BY _____ DATE 10/30/00

Underground Service Alert
Call: TOLL FREE 1 - 800 227-2600
TWO WORKING DAYS BEFORE YOU DIG

PRIVATE ENGINEERING NOTE

CONSTRUCTION CONTRACTOR AGREES THAT IN ACCORDANCE WITH GENERALLY ACCEPTED CONSTRUCTION PRACTICES, CONSTRUCTION CONTRACTOR WILL BE REQUIRED TO ASSUME SOLE AND COMPLETE RESPONSIBILITY FOR JOB SITE CONDITIONS DURING THE COURSE OF CONSTRUCTION OF THE PROJECT, INCLUDING SAFETY OF ALL PERSONS AND PROPERTY; THAT THIS REQUIREMENT SHALL BE MADE TO APPLY CONTINUOUSLY AND NOT BE LIMITED TO NORMAL WORKING HOURS, AND CONSTRUCTION CONTRACTOR FURTHER AGREES TO DEFEND, INDEMNIFY AND HOLD DESIGN PROFESSIONAL HARMLESS FROM ANY AND ALL LIABILITY, REAL OR ALLEGED, IN CONNECTION WITH THE PERFORMANCE OF WORK ON THIS PROJECT, EXCEPTING LIABILITY ARISING FROM THE SOLE NEGLIGENCE OF DESIGN PROFESSIONAL.

REGISTERED PROFESSIONAL ENGINEER — TECK C. LOH No. 50293 — Exp. 6-30-01 — CIVIL — STATE OF CALIFORNIA

PREPARED UNDER THE DIRECTION OF:

REGISTERED CIVIL ENGINEER NO. 50293
EXPIRATION DATE: 6-30-01 DATE: 10-19-00

CBG www.cantyeng.com

CANTY ENGINEERING GROUP, INC.
CIVIL ENGINEERING - PLANNING - SURVEYING
2020 IOWA AVENUE, SUITE 102, P.O. BOX 52050, RIVERSIDE, CA 92517
TEL (909) 683 - 5234 FAX (909) 683 - 5301
CITY OF RIVERSIDE TAX CERT NO: 69372 EXP: 4-7-01

SCALE: AS SHOWN
DATE: OCT. 1999

BENCH MARK CITY OF RIVERSIDE BENCH MARK: EB-A2
P.K. NAIL AND TAG IN TOP OF 35" X 50" X 20" GRANITE BOULDER, 100' W'LY OF TRAUTWEIN ROAD AND 500 FEET N'LY OF JESSE LANE. FB 735\74 ELEV: 1588.453

MARK	REVISIONS	APPR.	DATE

DESIGNED BY T.C.L. DRAWN BY C.C. CHECKED BY J.W.C.

CITY OF RIVERSIDE, CALIFORNIA
DEPARTMENT OF PUBLIC WORKS

	BY	DATE
APPROVED BY		
PRINCIPAL ENGR.		11/1/00
PLANNING DEPT.		11/1/00
STREET SERVICES		11/2/00
DEPUTY P.W. DIRECTOR		11/1/00

APPROVED BY Richard McGrath
DIRECTOR OF PUBLIC WORKS
DATE 12-15-2000

IN THE CITY OF RIVERSIDE
TRACT NO. 28828-2
STORM DRAIN
TITLE SHEET
FOR: SHEFFIELD HOMES

PROJECT NO. D-686
SHEET 1 OF 5
FILE NO.: 1022-002

INDEXED 1-23-2001 GH

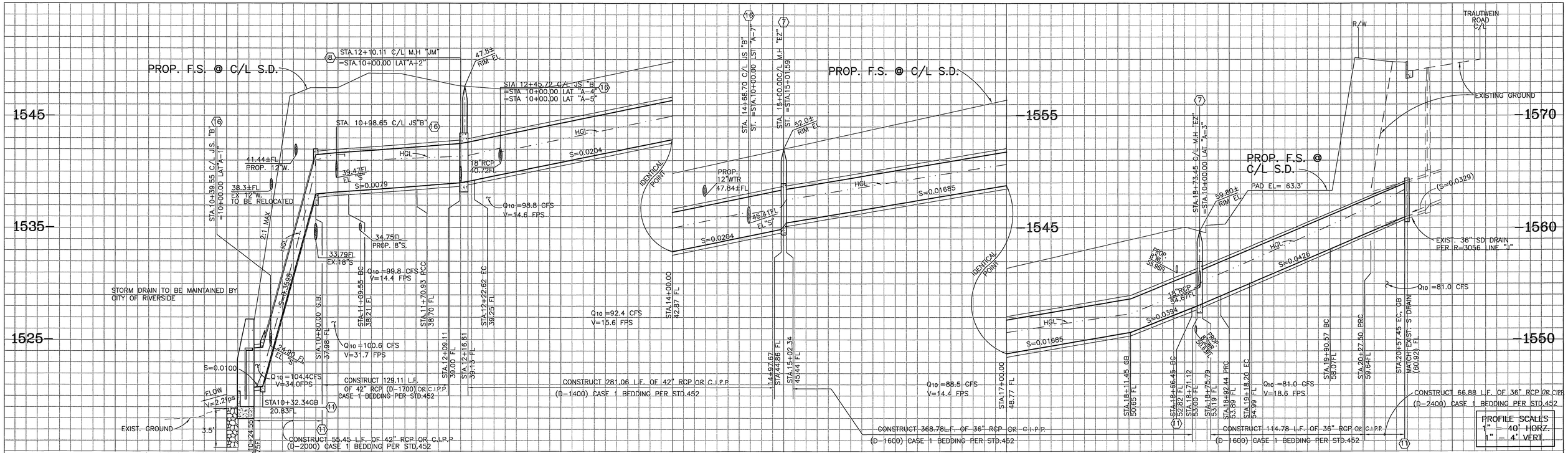

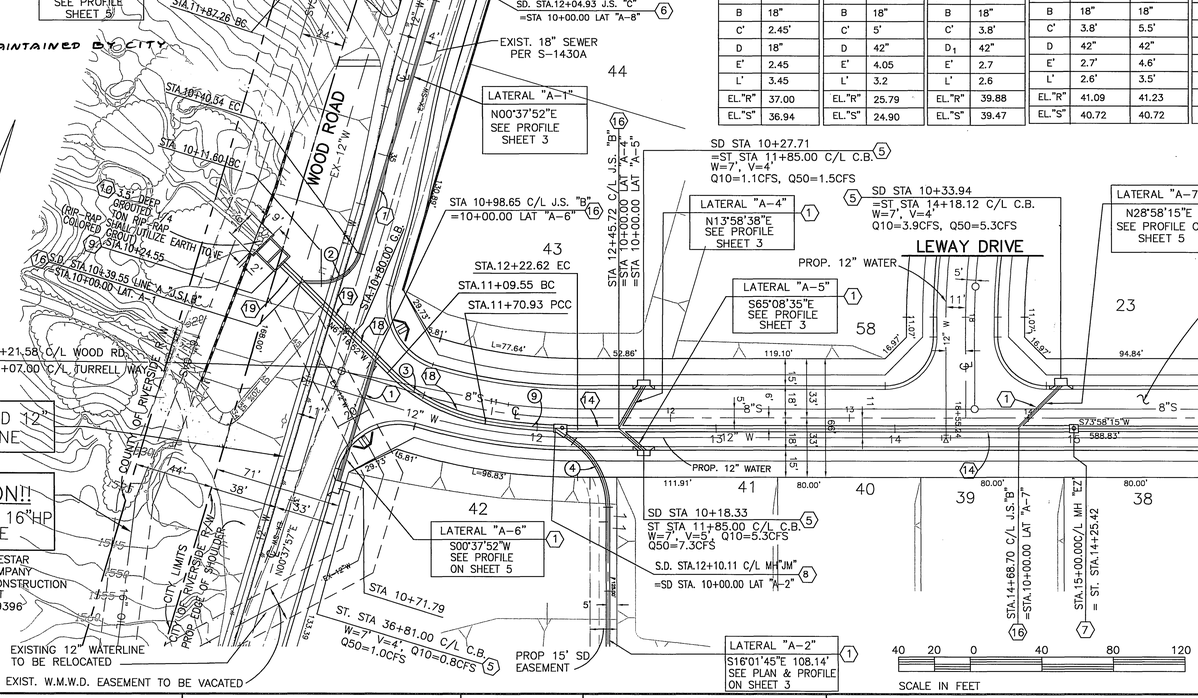

13		14		15		16	
C/L J.S. "C"		C/L J.S. "B"		C/L J.S."B"		C/L J.S."B"	
STA. 12+04.93		STA. 10+39.55		STA. 10+98.65		STA. 12+45.72	
	LAT "A-1"		LINE "A"		LINE "A"	LAT "A-4"	LAT "A-5"
A	72°52'36"	A	45°00'00"	A	61°48'44"	A	60°00'00"	40°53'36"
B	18"	B	18"	B	18"	B	18"	18"
C'	2.45'	C'	5'	C'	3.8'	C'	3.8'	5.5'
D	18"	D	42"	D_1	42"	D	42"	42"
E'	2.45	E'	4.05	E'	2.7	E'	2.7	4.6'
L'	3.45	L'	3.2	L'	2.6	L'	2.6'	3.5'
EL."R"	37.00	EL."R"	25.79	EL."R"	39.88	EL."R"	41.09	41.23
EL."S"	36.94	EL."S"	24.90	EL."S"	39.47	EL."S"	40.72	40.72

15		16	
C/L J.S."B"		C/L J.S."B"	
STA. 14+68.70		STA. 12+10.11	
A	45°00'00"	A	33°00'00"
B	24"	B	18"
C'	5.0'	C'	6.85
D_1	42"	D_1	42"
D_2	42"	D_2	42"
E'	4.05'	E'	6.5
L'	3.2'	L'	7.5
EL."R"	45.68	EL."R"	39.05
EL."S"	45.41	EL."S"	39.01

C/L MH "JM"	
STA. 12+10.11	
A	33°00'00"
B	18"
C'	6.85
D_1	42"
D_2	42"
E'	6.5
L'	7.5
EL."R"	39.05
EL."S"	39.01

C/L CURVE TABLE

CURVE	DELTA ANGLE	RADIUS	LENGTH	TANGENT
(1)	65°01'30"	27.69	31.43	17.65
(2)	90°00'00"	25.00	39.27	25.00
(3)	38°55'43"	88.18	59.91	31.16
(4)	54°39'27"	45.00	42.93	23.25
(5)	33°05'52"	45.00	26.00	13.37
(6)	32°47'54"	45.00	25.76	13.24
(7)	44°42'02"	45.00	35.11	18.50
(8)	94°01'44"	22.50	36.93	24.14
(9)	12°43'53"	306.00	68.00	34.14
(10)	38°06'43"	45.00	29.93	15.54

CONSTRUCTION NOTES

1. CONSTRUCT 18" RCP (D-2000)
2. CONSTRUCT 36" RCP (D-2400)
3. CONSTRUCT 36" RCP (D-1600)
4. CONSTRUCT CATCH BASIN PER CITY OF RIVERSIDE STD. DWG. NO 405.
5. CONSTRUCT JUNCTION STRUCTURE "C" PER CITY OF RIVERSIDE STD. DWG. NO. 422.
6. CONSTRUCT MANHOLE "EZ" PER CITY OF RIVERSIDE STD. DWG. NO 431.
7. CONSTRUCT CATCH BASIN X PER RCFC STD. DWG. NO. CB108.
8. CONSTRUCT MANHOLE "JM" PER CITY OF RIVERSIDE STD. DWG NO. 432.
9. CONSTRUCT ENERGY DISSIPATOR PER DETAIL "A" ON SHEET 4 (OUTLET SHALL UTILIZE EARTH TONE COLORED GROUT)
10. CONSTRUCT 1/4 TON GROUTED RIP-RAP (DIMENSION AS SHOWN ON PLAN). (RIP-RAP SHALL UTILIZE EARTH TONE COLORED GROUT)
11. CONSTRUCT CONCRETE COLLAR PER CITY OF RIVERSIDE STD DWG NO. 424
14. CONSTRUCT 42" RCP (D-1400)
16. CONSTRUCT JUNCTION STRUCTURE "B" PER CITY OF RIVERSIDE STD. DWG. NO. 421
17. CONSTRUCT CATCH BASIN X PER RCFC STD. DWG. NO. CB108.
18. CONSTRUCT 42" RCP (D-1700)
19. CONSTRUCT 42" RCP (D-2000)

REVIEWED BY W.M.W.D. SHEETS 1-5 FOR NON-INTERFERENCE COMPLIANCE ONLY
CIVIL ENGINEER #46212 — 11/3/00 DATE

QUESTAR SOUTHERN TRAILS PIPELINE
APPROVED BY — 10/30/00 DATE

COUNTY OF RIVERSIDE TRANSPORTATION DEPARTMENT MS 3791 (IP 000055)
APPROVED BY — 10/26/00 DATE

*AS-BUILT PER PLANS 8-18-03
APPROVAL BY TRANSPORTATION DEPT. IS FOR THE AREA WITHIN THE COUNTY ROAD R/W ONLY.

Underground Service Alert
Call: TOLL FREE 1 - 800 227-2600
TWO WORKING DAYS BEFORE YOU DIG

PRIVATE ENGINEERING NOTE
CONSTRUCTION CONTRACTOR AGREES THAT IN ACCORDANCE WITH GENERALLY ACCEPTED CONSTRUCTION PRACTICES, CONSTRUCTION CONTRACTOR WILL BE REQUIRED TO ASSUME SOLE AND COMPLETE RESPONSIBILITY FOR JOB SITE CONDITIONS DURING THE COURSE OF CONSTRUCTION OF THE PROJECT, INCLUDING SAFETY OF ALL PERSONS AND PROPERTY; THAT THIS REQUIREMENT SHALL BE MADE TO APPLY CONTINUOUSLY AND NOT BE LIMITED TO NORMAL WORKING HOURS, AND CONSTRUCTION CONTRACTOR FURTHER AGREES TO DEFEND, INDEMNIFY AND HOLD DESIGN PROFESSIONAL HARMLESS FROM ANY AND ALL LIABILITY, REAL OR ALLEGED, IN CONNECTION WITH THE PERFORMANCE OF WORK ON THIS PROJECT, EXCEPTING LIABILITY ARISING FROM THE SOLE NEGLIGENCE OF DESIGN PROFESSIONAL.

REGISTERED PROFESSIONAL ENGINEER — TEDK C. LOH No. 50293 Exp. 6-30-01 CIVIL — STATE OF CALIFORNIA

PREPARED UNDER THE DIRECTION OF:
REGISTERED CIVIL ENGINEER NO. 50293
EXPIRATION DATE: 6-30-01 DATE: 10/19/00

CEG www.cantyeng.com
CANTY ENGINEERING GROUP, INC.
CIVIL ENGINEERING - PLANNING - SURVEYING
2020 IOWA AVENUE, SUITE 102, P.O. BOX 52050, RIVERSIDE, CA 92517
TEL (909) 683 - 5234 FAX (909) 683 - 5301

SCALE: AS SHOWN
DATE: OCT. 1999

BENCH MARK CITY OF RIVERSIDE BENCH MARK: E8-A2 P.K. NAIL AND TAG ON TOP OF 35' X 50' X 20' GRANITE BOULDER, 100' W'LY OF TRAUTWIEN ROAD AND 0.3 MILE N'LY OF WOOD ROAD. FB 735\74 ELEV: 1588.453

MARK	REVISIONS	APPR.	DATE

DESIGNED BY T.C.L. DRAWN BY C.C. CHECKED BY J.W.C.

CITY OF RIVERSIDE, CALIFORNIA
DEPARTMENT OF PUBLIC WORKS

APPROVED BY	BY	DATE
PRINCIPAL ENGR.		
PLANNING DEPT.		
STREET SERVICES		
DEPUTY P.W. DIRECTOR		

APPROVED BY Richard McGrath
DIRECTOR OF PUBLIC WORKS
DATE 12-15-2000

TRACT NO. 28828-2
STORM DRAIN PLANS
LINE A

FOR: SHEFFIELD HOMES

PROJECT NO. D-686
SHEET 2 OF 5
FILE NO.: 1022-001

INDEXED 1-23-2001 GH

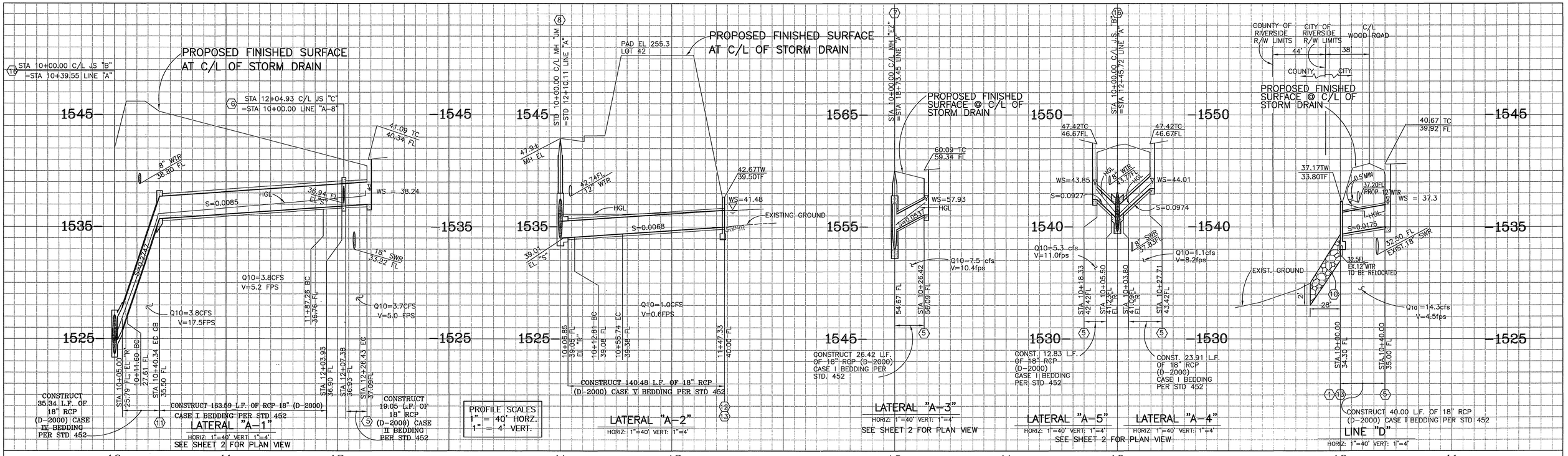

CONSTRUCTION NOTES

1. CONSTRUCT 18" RCP (D-2000)
2. CONSTRUCT 24" RCP (D-2000)
5. CONSTRUCT CATCH BASIN PER CITY OF RIVERSIDE STD. DWG. NO 405.
6. CONSTRUCT JUNCTION STRUCTURE "C" PER CITY OF RIVERSIDE STD. DWG NO. 422.
7. CONSTRUCT MANHOLE "EZ" PER CITY OF RIVERSIDE STD. DWG. NO 431.
8. CONSTRUCT MANHOLE "JM" PER CITY OF RIVERSIDE STD. DWG NO. 432.
10. CONSTRUCT 1/4 TON GROUTED RIP-RAP (DIMENSION AS SHOWN ON PLAN).
11. CONSTRUCT CONCRETE COLLAR PER CITY OF RIVERSIDE. STD DWG NO. 424
12. CONSTRUCT CALTRANS D-89 HEADWALL PER DETAIL "B" ON SHEET 4.
13. CONSTRUCT TRASH RACK PER APWA STD PLAN 361-0 (TYPE B) & DETAIL "C" ON SHEET 4
16. CONSTRUCT JUNCTION STRUCTURE "B" PER CITY OF RIVERSIDE STD. DWG NO. 421.

C/L CURVE TABLE

CURVE	DELTA ANGLE	RADIUS	LENGTH	TANGENT
1	Δ=54°39'27"	45.00	42.93	23.25

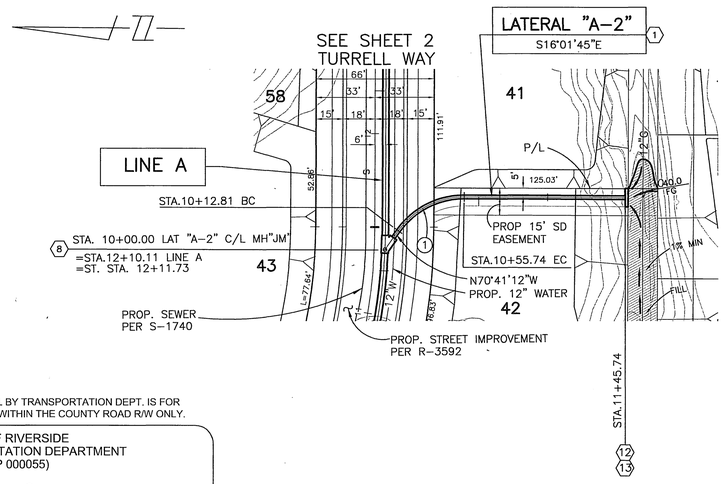

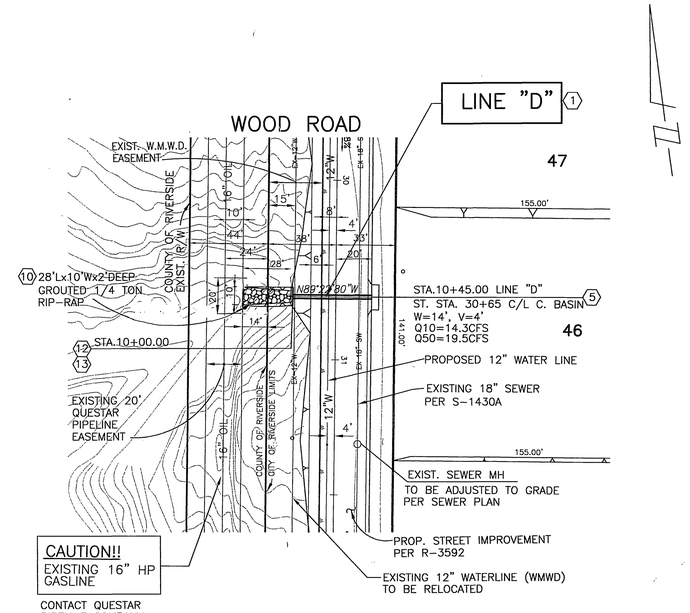

APPROVAL BY TRANSPORTATION DEPT. IS FOR THE AREA WITHIN THE COUNTY ROAD R/W ONLY.

REVIEWED BY W.M.W.D. SHEETS 1-5 FOR NON-INTERFERENCE COMPLIANCE ONLY

CIVIL ENGINEER 46212 — DATE 11/3/00

COUNTY OF RIVERSIDE
TRANSPORTATION DEPARTMENT
MS 3791 (IP 000055)

APPROVED BY — DATE 10/26/00

*AS-BUILT PER PLANS 8-18-03 4H

SCALE IN FEET: 40 20 0 40 80 120

Underground Service Alert
Call: TOLL FREE 1 - 800 227-2600
TWO WORKING DAYS BEFORE YOU DIG

PRIVATE ENGINEERING NOTE

CONSTRUCTION CONTRACTOR AGREES THAT IN ACCORDANCE WITH GENERALLY ACCEPTED CONSTRUCTION PRACTICES, CONSTRUCTION CONTRACTOR WILL BE REQUIRED TO ASSUME SOLE AND COMPLETE RESPONSIBILITY FOR JOB SITE CONDITIONS DURING THE COURSE OF CONSTRUCTION OF THE PROJECT, INCLUDING SAFETY OF ALL PERSONS AND PROPERTY; THAT THIS REQUIREMENT SHALL BE MADE TO APPLY CONTINUOUSLY AND NOT BE LIMITED TO NORMAL WORKING HOURS, AND CONSTRUCTION CONTRACTOR FURTHER AGREES TO DEFEND, INDEMNIFY AND HOLD DESIGN PROFESSIONAL HARMLESS FROM ANY AND ALL LIABILITY, REAL OR ALLEGED, IN CONNECTION WITH THE PERFORMANCE OF WORK ON THIS PROJECT, EXCEPTING LIABILITY ARISING FROM THE SOLE NEGLIGENCE OF DESIGN PROFESSIONAL.

REGISTERED PROFESSIONAL ENGINEER — TECK C. LOH No. 50293 Exp. 6-30-01 CIVIL — STATE OF CALIFORNIA

PREPARED UNDER THE DIRECTION OF:

REGISTERED CIVIL ENGINEER NO. 50293
EXPIRATION DATE: 6-30-01 DATE: 10-19-00

CANTY ENGINEERING GROUP, INC.
CIVIL ENGINEERING - PLANNING - SURVEYING
2020 IOWA AVENUE, SUITE 102, P.O. BOX 52050, RIVERSIDE, CA 92517
TEL (909) 683 - 5234 FAX (909) 683 - 5301
CITY OF RIVERSIDE TAX CERT NO: 69372 EXP: 4-7-00
www.cantyeng.com

SCALE: AS SHOWN
DATE: OCT. 1999

BENCH MARK CITY OF RIVERSIDE BENCH MARK: EB-A2
P.K. NAIL AND TAG ON TOP OF 35' X 50' X 20' GRANITE BOULDER, 100' W'LY OF TRAUTWIEN ROAD AND 0.3 MILE N'LY OF WOOD ROAD. FB 735\74 ELEV: 1588.453

MARK	REVISIONS	APPR.	DATE

DESIGNED BY T.C.L. DRAWN BY C.C. CHECKED BY J.W.C.

CITY OF RIVERSIDE, CALIFORNIA
DEPARTMENT OF PUBLIC WORKS

APPROVED BY	BY	DATE
PRINCIPAL ENGR.		
PLANNING DEPT.		
STREET SERVICES		
DEPUTY P.W. DIRECTOR		

APPROVED BY Richard McGrath
DIRECTOR OF PUBLIC WORKS
DATE 12-15-2000

TRACT NO. 28828-2
STORM DRAIN PLANS LINE D, LAT. A-1, A-2, A-3, A-4 & A-5

FOR: SHEFFIELD HOMES

PROJECT NO. D-686
SHEET 3 OF 5
FILE NO.: 1022-002

INDEXED 1-23-2001 4H

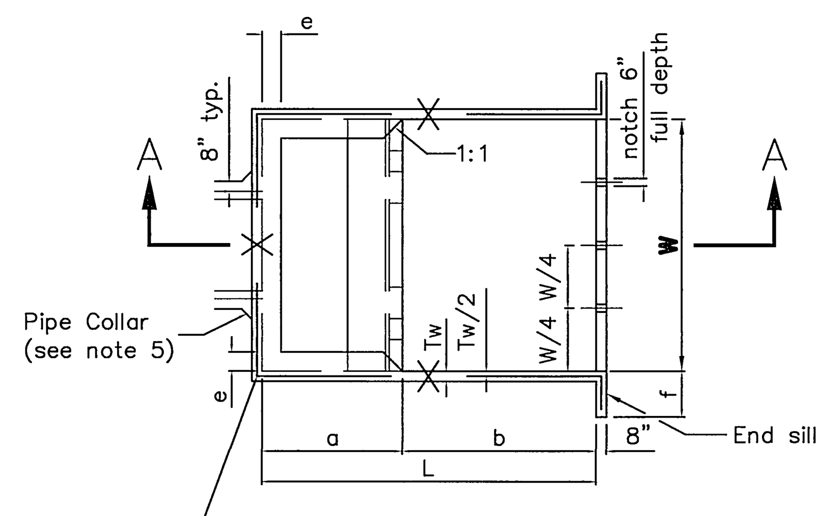

PLAN
Note: Riprap not shown.

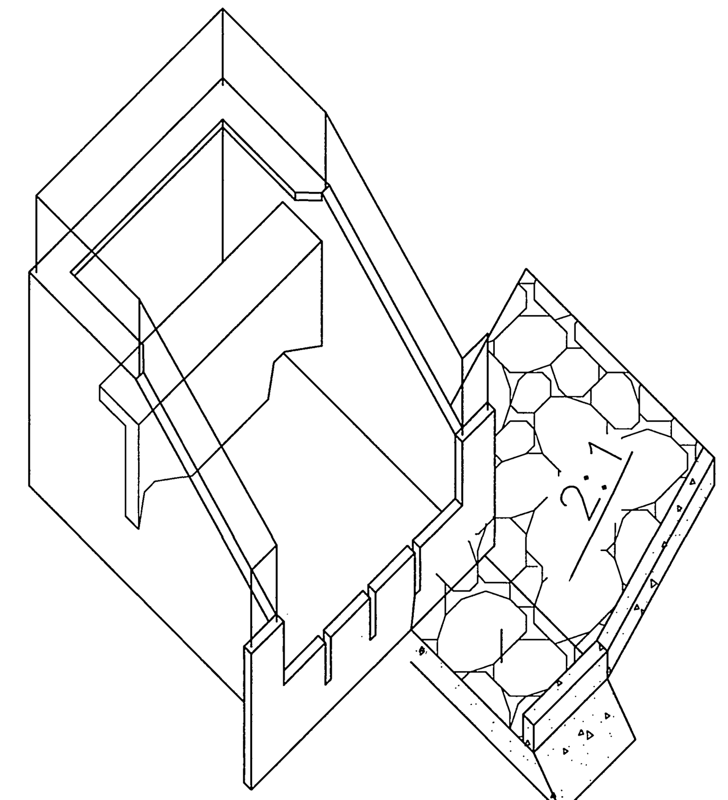

PICTORIAL VIEW

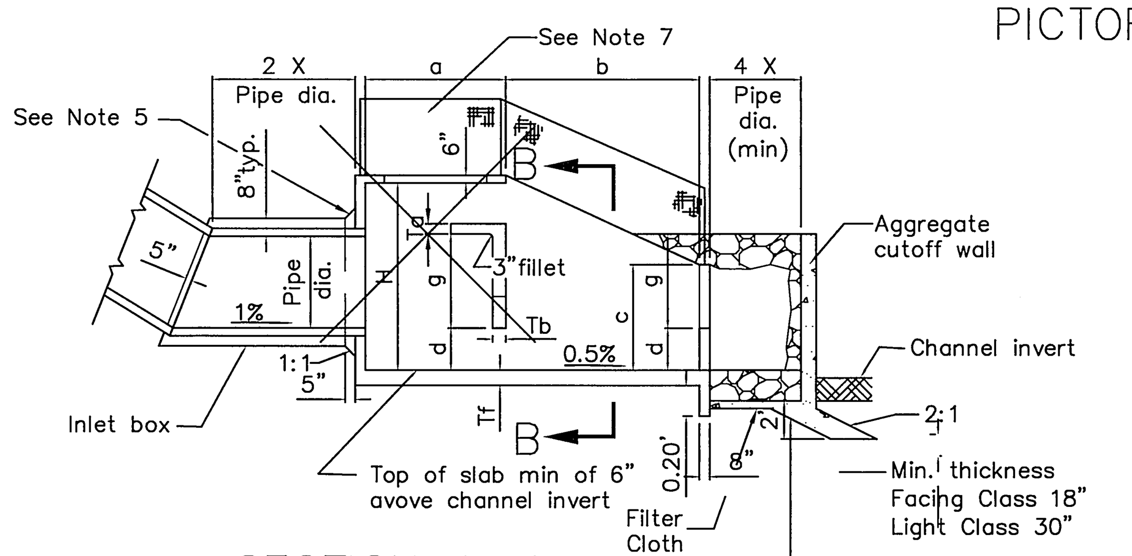

SECTION A–A

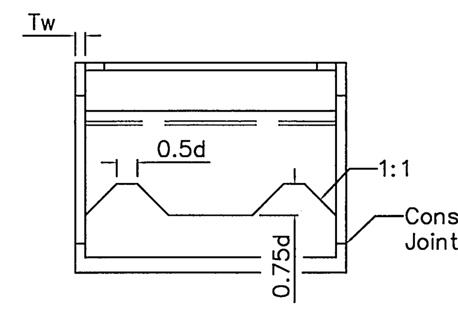

SECTION B–B

Pipe Dia (in)	18	24	30	36	42	48	54	60	72
Area (sq. ft.)	1.77	3.14	4.91	7.07	9.62	12.57	15.90	19.63	28.27
Max. Q (cfs)	21	38	59	85	115	151	191	236	339
W	5'–6"	6'–9"	8'–0"	9'–3"	10'–6"	11'–9"	13'–0"	14'–3"	16'–6"
H	4'–3"	5'–3"	6'–3"	7'–3"	8'–0"	9'–0"	9'–9"	10'–9"	12'–3'
L	7'–4"	9'–0"	10'–8"	12'–4"	14'–0"	15'–8"	17'–4"	19'–0"	22'–0"
a	3'–3"	3'–11"	4'–7"	5'–3"	6'–0"	6'–9"	7'–4"	8'–0"	9'–3"
b	4'–1"	5'–11"	6'–1"	7'–1"	8'–0"	8'–11"	10'–0"	11'–0"	12'–9'
c	2'–4"	2'–10"	3'–4"	3'–10"	4'–5"	4'–11"	5'–5"	5'–11"	6'–11"
d	0'–11"	1'–2"	1'–4"	1'–7"	1'–9"	2'–0"	2'–2"	2'–5"	2'–9"
e	0'–6"	0'–6"	0'–8"	0'–8"	0'–8"	0'–10"	1'–0"	1'–0"	1'–3"
f	1'–6"	2'–0"	2'–6"	3'–0"	3'–0"	3'–0"	3'–0"	3'–0"	3'–0"
g	2'–1"	2'–6"	3'–0"	3'–6"	3'–11"	4'–5"	4'–11"	5'–4"	6'–2"
Tf	8"			10"		12"			
Tb	7"			9 1/2"		10 1/2"			
Tw	7"			9 1/2"		10 1/2"			
Ta	7"			8"					

Notes

1. Design:
   Equivalent Fluid Pressure = 60 p.c.f.
   Maximum Outlet Velocity = 35 f.p.s.
2. Concrete shall be 560–C–3250
3. Reinforcing shall conform to ASTM designation A615 and may be grade 40 or 60. Reinforcing shall be placed with 2" clear concrete cover unless noted otherwise. Splices shall not be permitted except as indicated on the plans.
4. For pipe grades not exceeding 20 %, inlet box may be omitted.
5. If inlet box is omitted, construct pipe collar as shown.
6. Unless noted otherwise, all reinforcing bar bends shall be fabricated with standard hooks.
7. Five foot high chain link fencing, embed post 18" deep in walls and encase with Class B mortar.
8. in Sandy and Silty soil:
   a) Riprap and aggregate base cutoff wall required at the end of rock apron.
   b) Filter cloth (Polyfilter X or equivalent) shall be installed on native soil and base, minimum of 1 ft. overlaps at joints.
9. Riprap and subbase classification shall be as shown on plans.

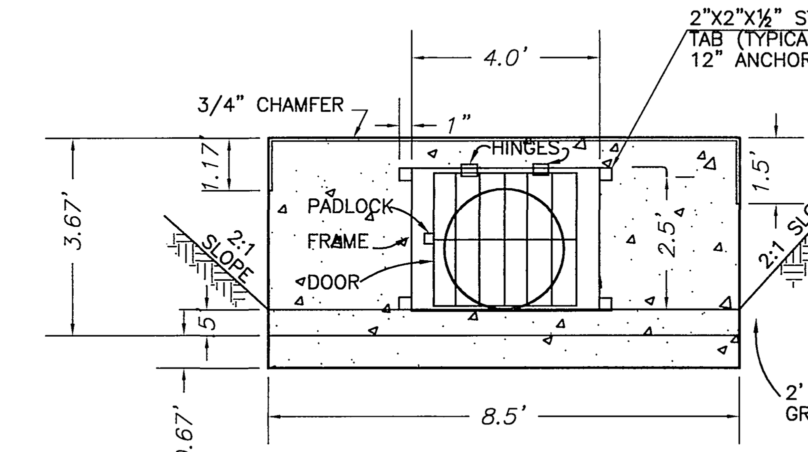

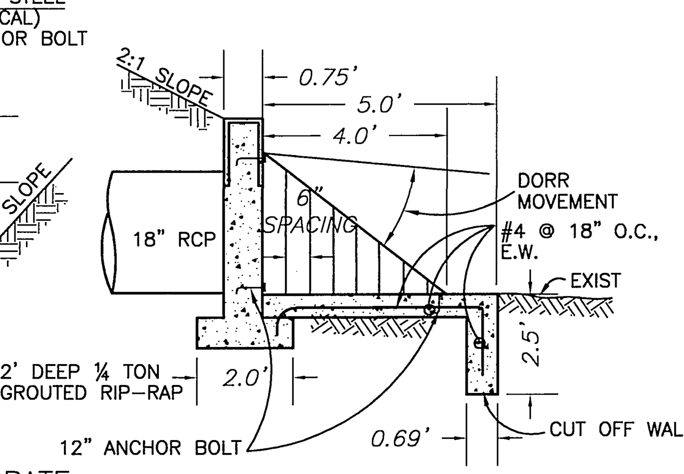

NOTES FOR HEAD & WALL GRATE

1. ALL STEEL BARS TO BE USED SHALL BE #4 REBAR OR GREATER & GALVANIZED
2. BAR SPACING TO BE 4" MAXIMUM. –ON CENTER.
3. TRIM ANCHOR BOLTS UPON COMPLETION.
4. REMOVE ALL RUST OFF GRATE AND PAINT BLACK USING CITY APROVED PAINT.
5. HEADWALL TO BE CONST. PER CALTRANS STD. D–89.
6. ALL REINFORCING STEEL & BARS, HORZ. & VERT. SPACING=18" MAX.

DETAIL "C"

GRATE DETAIL STD. DWG. D–89 (13)

N.T.S.

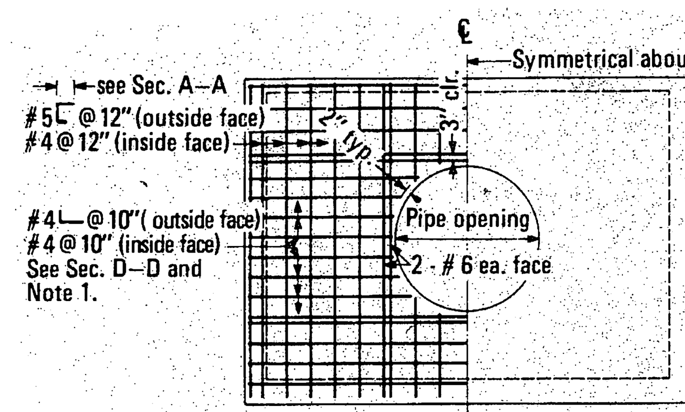

HEADWALL ELEVATION

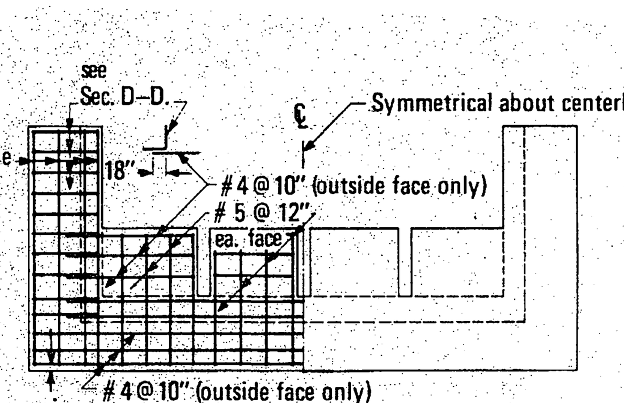

END SILL ELEVATION

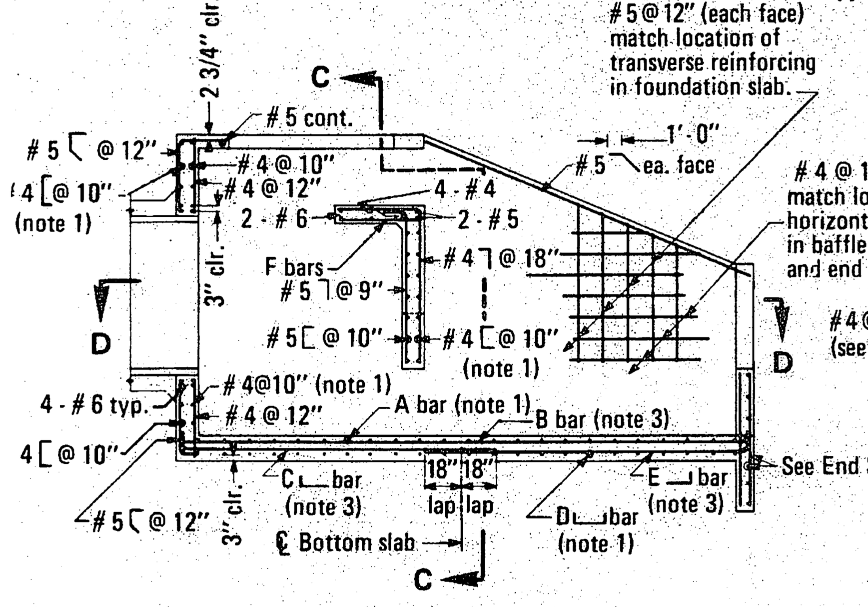

SECTION A–A

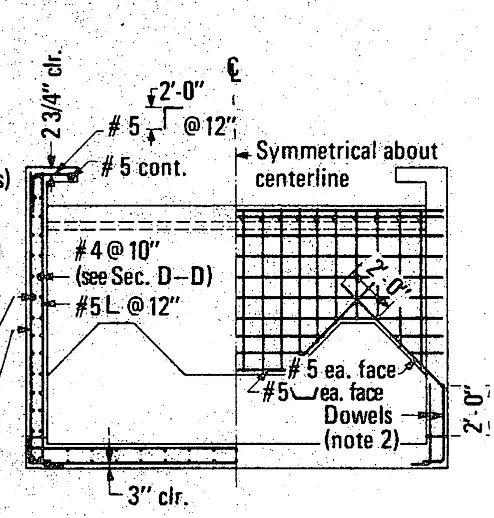

SECTION C–C

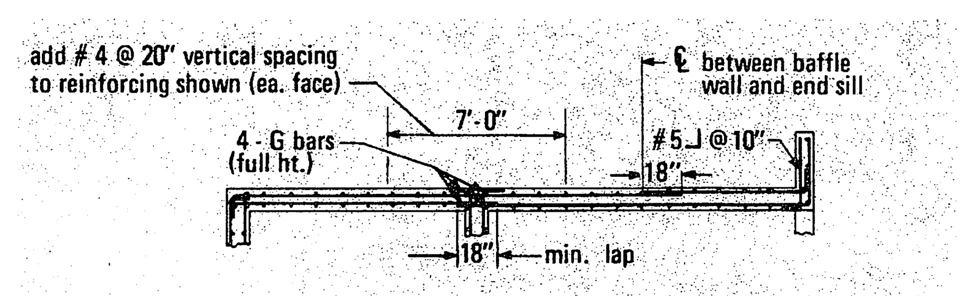

SECTION D–D

Pipe dia. (in.)	36	42	48	54	60	72
A bar	# 5 @ 12"		# 6 @ 12"		# 7 @ 12"	
B bar	# 5 @ 12"		# 6 @ 12"			
C bar	# 4 @ 12"		# 5 @ 12"			
D bar	# 4 @ 12"		# 5 @ 12"		# 6 @ 12"	
E bar	# 4 @ 12"		# 5 @ 12"			
F bar	# 4 @ 9"		# 5 @ 9"			#6@9"
G bar	# 7			# 11		

NOTES

1. Match location of sidewall reinforcing.
2. Dowels having same size and spacing as wall reinforcing may be used in lieu of continuous bars at contractors option.
3. Match location of headwall or end sill reinforcing.

DETAIL "A"

ENERGY DISSIPATOR SAN DIEGO REGIONAL STD. DWG D–41 (9)

N.T.S.

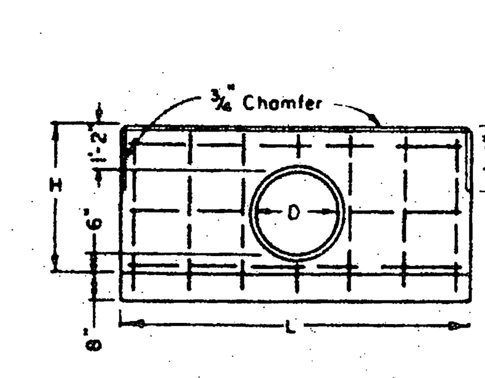

FRONT ELEV SINGLE HEADWALL

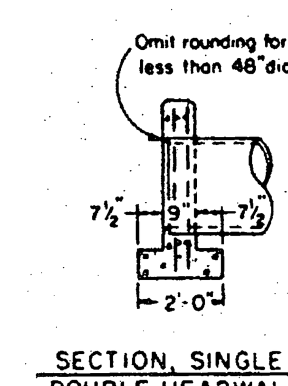

SECTION, SINGLE & DOUBLE HEADWALLS

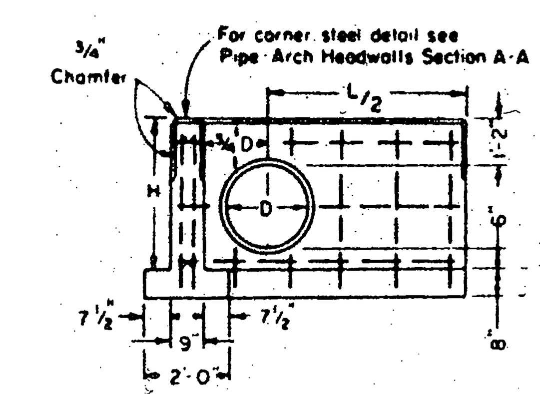

FRONT ELEV "L" HEADWALL

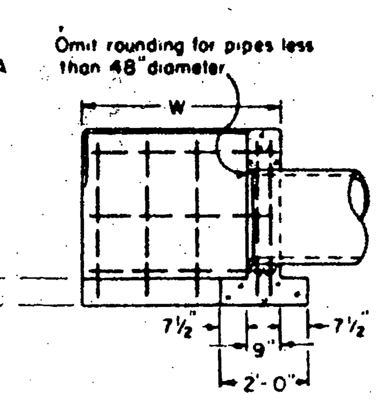

SECTION "L" HEADWALL

D	H	SINGLE		
		L	Steel	Conc
in	ft-in	ft-in	Lbs	Cu Yds
12	2-8	5-0	35	0.60
15	2-11	6-0	40	0.75
18	3-2	7-0	50	0.91
21	3-5	7-6	60	1.02
24	3-8	8-6	75	1.20
27	3-11	9-6	85	1.39
30	4-2	10-0	85	1.52
33	4-5	11-0	100	1.73
36	4-8	12-0	105	1.95
39	4-11	12-6	130	2.09
42	5-2	13-6	140	2.34
45	5-5	14-6	150	2.60
48	5-8	15-0	160	2.75
51	5-11	16-0	180	3.03
54	6-2	17-0	190	3.31

STRAIGHT HEADWALLS

D	H	L/2	LENGTH OF W									
			3'-4"		4'-10"		6'-4"		7'-10"		9'-4"	
			Steel	Conc	Steel	Conc	Steel	Conc	Steel	Conc	Steel	Conc
in	ft-in	ft-in	Lbs	Cu Yds	Lbs	Cu Yds	Lbs	Cu Yds	Lbs	Cu Yds	Lbs	Cu Yds
12	2-8	2-6	50	79	60	.98						
15	2-11	3-0	55	91	65	1.11						
18	3-2	3-6	65	1.04	75	1.25						
21	3-5	3-9	75	1.15	90	1.36						
24	3-8	4-3	85	1.29	100	1.51	110	1.74				
27	3-11	4-9	90	1.44	105	1.67	115	1.91				
30	4 2	5-0	95	1.55	110	1.80	120	2.05	135	2.29		
33	4 5	5-6	105	1.71	120	1.97	135	2.23	150	2.48		
36	4-8	6-0	110	1.88	125	2.15	140	2.41	155	2.68	170	2.95
39	4-11	6-3			150	2.28	170	2.56	185	2.84	200	3.12
42	5-2	6-9			155	2.42	175	2.76	190	3.05	210	3.34
45	5-5	7-3					180	2.97	200	3.27	215	3.57
48	5-8	7-6					190	3.13	216	3.44	230	3.75
51	5-11	8-0							220	3.67	235	3.99
54	6-2	8-6							235	3.91	250	4.24

"L" HEADWALLS

CIRCULAR PIPE CULVERT HEADWALLS

GENERAL NOTES

1. No deduction made in quantities for thickness of pipe walls.
2. All reinforcing steel #4 bars. All vertical and horizontal tie bars 18" maximum spacing.
3. Length of wall "W" may be varied to suit conditions encounted in the field, and straight line interpolation may be used to calculate quantities.
4. Quantities are for design purposes only.

DETAIL "B"

HEADWALL CALTRANS STD. D–89 (9)

N.T.S.

*AS-BUILT PER PLANS 8-18-03 4H

Underground Service Alert
Call: TOLL FREE
1 – 800
227–2600
TWO WORKING DAYS BEFORE YOU DIG

PRIVATE ENGINEERING NOTE

CONSTRUCTION CONTRACTOR AGREES THAT IN ACCORDANCE WITH GENERALLY ACCEPTED CONSTRUCTION PRACTICES, CONSTRUCTION CONTRACTOR WILL BE REQUIRED TO ASSUME SOLE AND COMPLETE RESPONSIBILITY FOR JOB SITE CONDITIONS DURING THE COURSE OF CONSTRUCTION OF THE PROJECT, INCLUDING SAFETY OF ALL PERSONS AND PROPERTY; THAT THIS REQUIREMENT SHALL BE MADE TO APPLY CONTINUOUSLY AND NOT BE LIMITED TO NORMAL WORKING HOURS, AND CONSTRUCTION CONTRACTOR FURTHER AGREES TO DEFEND, INDEMNIFY AND HOLD DESIGN PROFESSIONAL HARMLESS FROM ANY AND ALL LIABILITY, REAL OR ALLEGED, IN CONNECTION WITH THE PERFORMANCE OF WORK ON THIS PROJECT, EXCEPTING LIABILITY ARISING FROM THE SOLE NEGLIGENCE OF DESIGN PROFESSIONAL.

REGISTERED PROFESSIONAL ENGINEER — TECK C. LOH — No. 50293 — Exp. 6-30-01 — CIVIL — STATE OF CALIFORNIA

PREPARED UNDER THE DIRECTION OF:
REGISTERED CIVIL ENGINEER NO. 50293
EXPIRATION DATE: 6–30–01 DATE: 9/15/00

CEG
CANTY ENGINEERING GROUP, INC.
CIVIL ENGINEERING - PLANNING - SURVEYING
www.cantyeng.com
2020 IOWA AVENUE, SUITE 102, P.O. BOX 52050, RIVERSIDE, CA 92517
TEL (909) 683 - 5234 FAX (909) 683 - 5301

SCALE: AS SHOWN
DATE: OCT. 1999

BENCH MARK CITY OF RIVERSIDE BENCH MARK: E8–A2 P.K. NAIL AND TAG ON TOP OF 35' X 50' X 20' GRANITE BOULDER, 100' W'LY OF TRAUTWIEN ROAD AND 0.3 MILE N'LY OF WOOD ROAD. FB 735\74 ELEV: 1588.453

MARK	REVISIONS	APPR.	DATE

DESIGNED BY T.C.L. DRAWN BY C.C. CHECKED BY J.W.C.

CITY OF RIVERSIDE, CALIFORNIA
DEPARTMENT OF PUBLIC WORKS

APPROVED BY	BY	DATE
PRINCIPAL ENGR.		12/14/00
PLANNING DEPT.	JB	11/22/00
STREET SERVICES		11/22/00
DEPUTY P.W. DIRECTOR		12/14/00

APPROVED BY
Richard McGrath
DIRECTOR OF PUBLIC WORKS
DATE 12-15-2000

TRACT NO. 28828-2
STORM DRAIN PLANS
DETAILS

FOR: SHEFFIELD HOMES

PROJECT NO.
D-686
SHEET 4 OF 5
FILE NO.: 1022–002

INDEXED 1-23-2001 4H

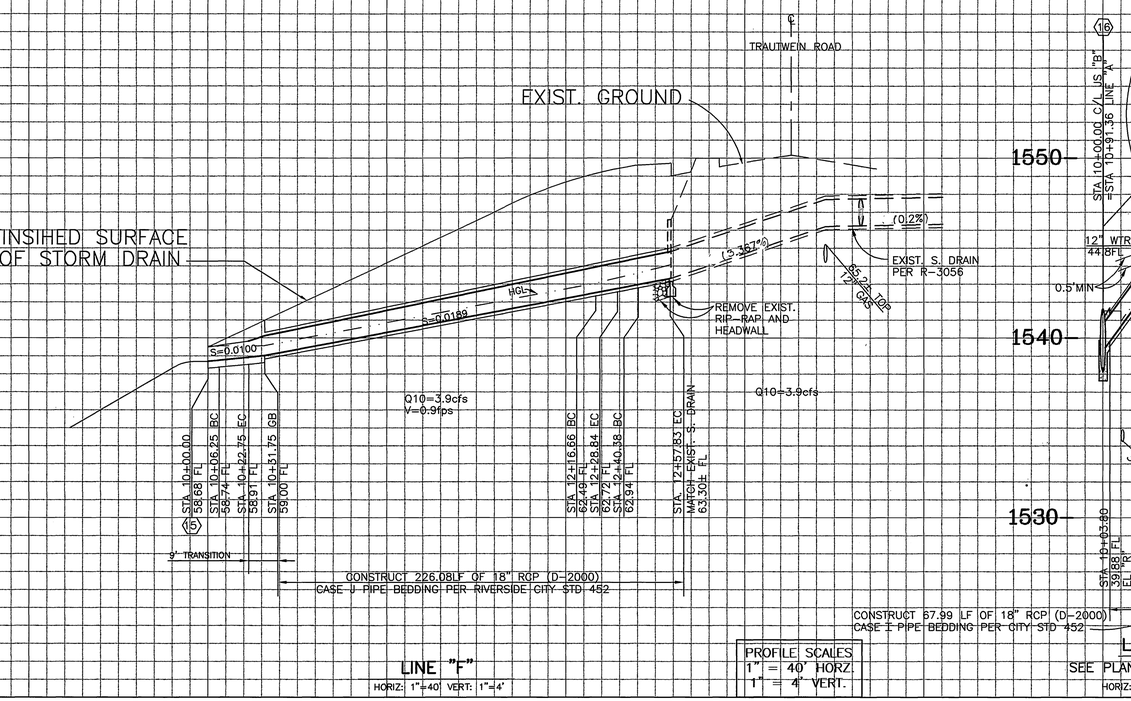

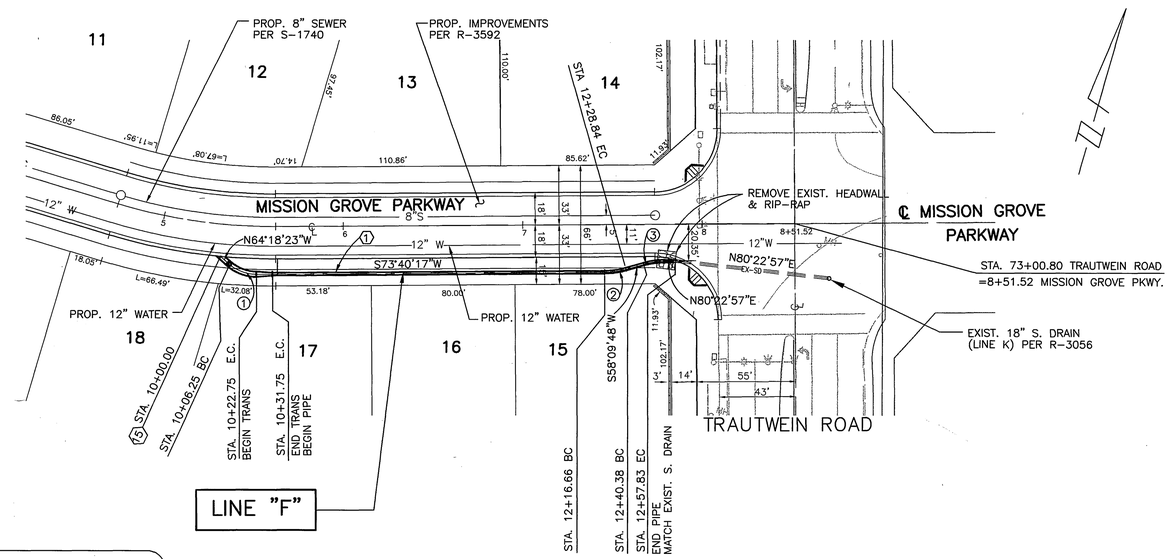

C/L CURVE TABLE				
CURVE	DELTA ANGLE	RADIUS	LENGTH	TANGENT
(1)	Δ=42°01'20"	22.50	16.50	8.64
(2)	Δ=15°30'29"	45.00	12.18	6.13
(3)	Δ=22°13'09"	45.00	17.45	8.84

CONSTRUCTION NOTES

(1) CONSTRUCT 18" RCP (D-2000).

(5) CONSTRUCT CATCH BASIN PER CITY OF RIVERSIDE STD. DWG. NO 405.

(6) CONSTRUCT JUNCTION STRUCTURE "C" PER CITY OF RIVERSIDE STD. DWG NO. 422.

(11) CONSTRUCT CONCRETE COLLAR PER CITY OF RIVERSIDE STD DWG NO. 424.

(15) CONSTRUCT CURB OUTLET PER CITY OF RIVERSIDE STD. DWG. NO. 410.

(16) CONSTRUCT JUNCTION STRUCTURE "B" PER CITY OF RIVERSIDE STD. DWG. NO. 421.

(17) CONSTRUCT CATCH BASIN X PER RCFC & WCD STD. DWG. NO. CP108.

REVIEWED BY W.M.W.D. SHEETS 1-5
FOR NON-INTERFERENCE COMPLIANCE ONLY

11/3/00
CIVIL ENGINEER #46212 DATE

*AS-BUILT PER PLANS 8-18-03 GH

40 20 0 40 80 120
SCALE IN FEET

Underground Service Alert
Call: TOLL FREE 1 - 800 227-2600
TWO WORKING DAYS BEFORE YOU DIG

PRIVATE ENGINEERING NOTE

CONSTRUCTION CONTRACTOR AGREES THAT IN ACCORDANCE WITH GENERALLY ACCEPTED CONSTRUCTION PRACTICES, CONSTRUCTION CONTRACTOR WILL BE REQUIRED TO ASSUME SOLE AND COMPLETE RESPONSIBILITY FOR JOB SITE CONDITIONS DURING THE COURSE OF CONSTRUCTION OF THE PROJECT, INCLUDING SAFETY OF ALL PERSONS AND PROPERTY; THAT THIS REQUIREMENT SHALL BE MADE TO APPLY CONTINUOUSLY AND NOT BE LIMITED TO NORMAL WORKING HOURS, AND CONSTRUCTION CONTRACTOR FURTHER AGREES TO DEFEND, INDEMNIFY AND HOLD DESIGN PROFESSIONAL HARMLESS FROM ANY AND ALL LIABILITY, REAL OR ALLEGED, IN CONNECTION WITH THE PERFORMANCE OF WORK ON THIS PROJECT, EXCEPTING LIABILITY ARISING FROM THE SOLE NEGLIGENCE OF DESIGN PROFESSIONAL.

REGISTERED PROFESSIONAL ENGINEER
TECK C. LOH
No. 50293
Exp. 6-30-01
CIVIL
STATE OF CALIFORNIA

PREPARED UNDER THE DIRECTION OF:

REGISTERED CIVIL ENGINEER NO. 50293
EXPIRATION DATE: 6-30-01 DATE: 9/15/00

CBG www.cantyeng.com
CANTY ENGINEERING GROUP, INC.
CIVIL ENGINEERING - PLANNING - SURVEYING
2020 IOWA AVENUE, SUITE 102, P.O. BOX 52050, RIVERSIDE, CA 92517
TEL (909) 683 - 5234 FAX (909) 683 - 5301
CITY OF RIVERSIDE TAX CERT NO: 69372 EXP: 4-7-00

SCALE: AS SHOWN
DATE: OCT. 1999

BENCH MARK CITY OF RIVERSIDE BENCH MARK: E8-A2
P.K. NAIL AND TAG ON TOP OF 35' X 50' X 20' GRANITE BOULDER, 100' W'LY OF TRAUTWIEN ROAD AND 0.3 MILE N'LY OF WOOD ROAD. FB 735\74 ELEV: 1588.453

MARK	REVISIONS	APPR.	DATE

DESIGNED BY T.C.L. DRAWN BY C.C. CHECKED BY J.W.C.

CITY OF RIVERSIDE, CALIFORNIA
DEPARTMENT OF PUBLIC WORKS

	BY	DATE
APPROVED BY		
PRINCIPAL ENGR.	JW	11/1/00
PLANNING DEPT.	JB	11/2/00
STREET SERVICES		11/3/00
DEPUTY P.W. DIRECTOR	JW	11/1/00

APPROVED BY Richard McGrath
DIRECTOR OF PUBLIC WORKS
DATE 12-15-2000

TRACT NO. 28828-2
STORM DRAIN PLANS
LINE "F" & LAT "A-6" LAT "A-7" & LAT "A-8"

FOR: SHEFFIELD HOMES

PROJECT NO. D-686
SHEET 5 OF 5
FILE NO.: 1022-002

INDEXED 1-23-2001 GH

H:\CEG CLIENT DIRECTORY\PAUL GARRETT\Tract 28828 Wood Canyon (1046-001)\CAD\TRACT 28828\STORM DRAIN\Phase2\ph2-sht5dwg.dwg Fri Sep 15 15:17:22 2000 H. ROCHA