STORM DRAIN IMPROVEMENT PLANS

PARCEL MAP 30369, IN THE CITY OF RIVERSIDE

LINE "AR"

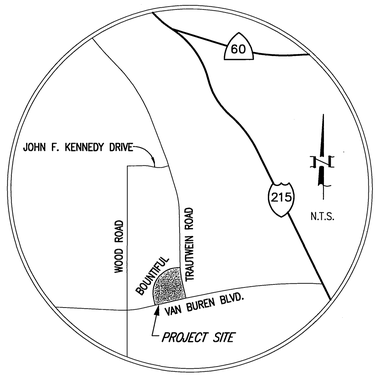

VICINITY MAP
NOT TO SCALE

	CONSTRUCTION NOTES & QUANTITY ESTIMATE QUANTITY ESTIMATE IS FOR BONDING PREPOSSESS ONLY, CONTRACTOR SHALL VERIFY ALL QUANTITIES PRIOR TO CONSTRUCTION		
/1	(1) CONSTRUCT 30" RCP (D-LOAD PER PLAN) OR 30" C.I.P.P.	428	LF
	(2) CONSTRUCT MANHOLE EZ PER CITY STD. 431	1	EA
	(3) CONSTRUCT CONCRETE COLLAR PER CITY STD. 424	1	EA
	(4) CONSTRUCT HEADWALL PER CALTRANS STD. D89, SEE SHEET 2	1	EA
/2	~~(5) CONSTRUCT SLOPED PROTECTION BARRIER PER APWA STD. 360-0, SEE SHEET 2~~	~~1~~	~~EA~~
	(6) CONSTRUCT GROUTED RIP-RAP (D 50= 150 LBS. (15") 23" THICK)	45	CY
/2	(7) CONSTRUCT PROTECTION BARRIER PER LOS ANGELES FLOOD CONTROL DISTRICT DWG. # 2-D261-1, SHOWN ON SHEET 2A	1	EA
/3	(8) CONSTRUCT JUNCTION STRUCTURE B PER CITY OF RIVERSIDE STD. DWG. 421	1	EA

/1 C.I.P.P. NOTES:

1. CAST-IN-PLACE CONCRETE PIPE CONSTRUCTION SHALL BE IN ACCORDANCE WITH 306-4 OF THE STANDARD SPECIFICATION FOR PUBLIC WORKS CONSTRUCTION.
2. FULL TIME INSPECTION SHALL BE PROVIDED AT NO COST TO THE CITY BY A CITY APPROVED INSPECTOR. TWO WEEKS PRIOR TO CONSTRUCTION THE RESUME OF THE PROPOSED INSPECTORS SHALL BE SUBMITTED TO THE CITY FOR APPROVAL.
3. TRENCHING SHALL BE COMPLETED WITH A CURVED BUCKET TO CREATE A SEMI-CIRCULAR TRENCH.
4. MATERIAL TESTING IN ACCORDANCE WITH SECTION 306-4.7 OF THE STANDARD SPECIFICATION FOR PUBLIC WORKS CONSTRUCTION SHALL BE COMPLETED AT NO COST TO THE CITY.
5. REINFORCED CONCRETE PIPE SHALL BE USED 10 FEET ON EACH SIDE OF ALL CUT-FILL TRANSITIONS.
6. UPON COMPLETION OF CONSTRUCTION, A REPORT COVERING CONSTRUCTION OF THE PIPE SHALL BE PREPARED AND SUBMITTED TO THE CITY. THIS REPORT SHALL INCLUDE A STANDARD VHS VIDEO INSPECTION OF THE PIPE, DAILY LOGS COVERING THE METHOD OF PIPE CONSTRUCTION, A SUMMARY OF THE MATERIAL TESTS, PROBLEMS ENCOUNTER AND DOCUMENTATION OF ALL REPAIRS. APPROVAL OF THE REPORT AND RELEASE OF THE IMPROVEMENT BOND IS CONTINGENT UPON RECEIPT AND APPROVAL OF THE REPORT BY THE CITY.

HOLD HARMLESS INDEMNIFICATION CLAUSE

THE CONTRACTOR AGREES THAT HE SHALL ASSUME SOLE AND COMPLETE RESPONSIBILITY FOR JOB SITE CONDITIONS DURING THE COURSE OF CONSTRUCTION OF THE PROJECT INCLUDING SAFETY OF ALL PERSONS AND PROPERTY; THAT THIS REQUIREMENT SHALL APPLY CONTINUOUSLY AND NOT BE LIMITED TO NORMAL WORKING HOURS; AND THAT THE CONTRACTOR SHALL DEFEND, INDEMNIFY, AND HOLD THE CITY OF RIVERSIDE, THE OWNER, AND THE PRIVATE ENGINEERS HARMLESS FOR ANY AND ALL LIABILITY; REAL OR ALLEGED, IN CONNECTION WITH PERFORMANCE OF WORK ON THIS PROJECT, EXCEPTING FOR LIABILITY ARISING FROM THE SOLE NEGLIGENCE OF THE OWNER OR THE ENGINEER.

EXISTING UNDERGROUND STRUCTURES

THE EXISTENCE AND LOCATION OF ANY UNDERGROUND UTILITY PIPE STRUCTURES OR CONDUITS SHOWN ON THESE PLANS ARE OBTAINED BY A SEARCH OF THE AVAILABLE RECORDS. TO THE BEST OF OUR KNOWLEDGE, THERE ARE NO EXISTING UTILITIES EXCEPT AS SHOWN ON THESE PLANS. IT SHALL BE THE CONTRACTOR'S RESPONSIBILITY TO NOTIFY THE OWNERS OF THE UTILITIES OR STRUCTURES CONCERNED BEFORE STARTING WORK. CONTRACTOR FURTHER ASSUMES ALL LIABILITY AND RESPONSIBILITY FOR THE UNDERGROUND UTILITY PIPES, CONDUITS OR STRUCTURES SHOWN OR NOT SHOWN ON THESE PLANS.

NOTICE TO CONTRACTOR

CONTRACTOR SHALL VERIFY ALL CONDITIONS AND DIMENSIONS AND SHALL REPORT ALL DISCREPANCIES TO THE ENGINEER PRIOR TO THE COMMENCEMENT OF WORK.

GENERAL NOTES

1. IT SHALL BE THE RESPONSIBILITY OF THE CONTRACTOR TO CLEAR THE RIGHT-OF-WAY IN ACCORDANCE WITH THE PROVISIONS OF LAW AS IT AFFECTS EACH UTILITY INCLUDING IRRIGATION LINES AND APPURTENANCES AND AT NO COST TO THE CITY.
2. CONSTRUCTION SHALL BE IN ACCORDANCE WITH THE CITY OF RIVERSIDE DEPT. OF PUBLIC WORKS STANDARD DRAWINGS, IT'S SUPPLEMENTAL NOTES, AND THE STANDARD SPECIFICATIONS FOR PUBLIC WORKS CONSTRUCTION, CURRENT EDITION.
3. THE PRIVATE ENGINEER SIGNING THESE PLANS IS RESPONSIBLE FOR ASSURING THE ACCURACY AND ACCEPTABILITY OF THE WORK HEREON. IN THE EVENT OF DISCREPANCIES ARISING DURING CONSTRUCTION, THE PRIVATE ENGINEER SHALL BE RESPONSIBLE FOR DETERMINING AN ACCEPTABLE SOLUTION AND REVISING THE PLANS FOR APPROVAL BY THE CITY.
4. QUANTITIES SHOWN ARE FOR INFORMATION ONLY AND THE CITY OF RIVERSIDE IS NOT RESPONSIBLE FOR THEIR ACCURACY.
5. THE DEVELOPER SHALL BE RESPONSIBLE FOR PRESERVING OR RE-ESTABLISHING AND REFERENCING SURVEY MONUMENTS DESTROYED, DISTURBED OR BURIED AS A RESULT OF CONSTRUCTION SHOWN HEREON.
6. ALL FLAGGED ELEVATIONS SHALL BE STAKED IN THE FIELD BY THE PRIVATE ENGINEER.
7. ALL STATIONING REFERS TO CENTERLINE OF CONSTRUCTION UNLESS OTHERWISE NOTED. STATIONING FOR LATERALS AND CONNECTOR PIPES REFER TO THE CENTERLINE-CENTERLINE INTERSECTION.
8. HOURS OF OPERATION ARE 7 A.M. TO 6 P.M. MONDAY THROUGH FRIDAY. DUST SHALL BE CONTROLLED BY WATERING OR OTHER APPROVED METHODS.
9. NO PERSON SHALL PERFORM ANY CONSTRUCTION ACTIVITY OR INSTALL ANY OBJECTS WITHIN THE PUBLIC RIGHTS-OF-WAY OR EASEMENTS OF THE CITY OF RIVERSIDE WITHOUT A VALID CONSTRUCTION PERMIT OR A STREET OPENING PERMIT OR AN ENCROACHMENT PERMIT ISSUED BY THE CITY'S PUBLIC WORKS DEPARTMENT.
10. ANY TRAFFIC CONTROL STRIPING OBLITERATED AND OR BADLY WORN DURING CONSTRUCTION SHALL BE RESTORED BY THE CONTRACTOR WITHIN FIVE DAYS AFTER NOTIFICATION FROM THE CITY INSPECTORS.
11. THE CONTRACTOR SHALL CALL IN A LOCATION REQUEST TO UNDERGROUND SERVICE ALERT (U.S.A.), PHONE No. 1-800-227-2600, TWO WORKING DAYS BEFORE DIGGING. NO CONSTRUCTION PERMIT WILL BE ISSUED BY THE PUBLIC WORKS DEPARTMENT INVOLVING EXCAVATION FOR UNDERGROUND FACILITIES UNLESS THE APPLICANT HAS BEEN PROVIDED AN INQUIRY IDENTIFICATION NUMBER BY U.S.A.
12. ALL CROSS SECTIONS ARE TAKEN LOOKING UPSTREAM.
13. CONTRACTOR TO VERIFY EXISTING STORM DRAIN ELEVATIONS PRIOR TO CONSTRUCTION.
14. PIPE BEDDING SHALL BE PER CITY OF RIVERSIDE STD. DWG. No. 452, CASE 1 UNLESS OTHERWISE NOTED.
15. THE STORM DRAIN CONTRACTOR SHALL ADJUST STORM DRAIN MANHOLES TO FINAL GRADE AFTER PAVING IS COMPLETED.
16. PIPE SECTIONS TO BE BEVELED AT ONE OR BOTH ENDS AS NEEDED TO MEET SYSTEM DESIGN PARAMETERS. SECTIONS BEVELED IN THIS MANNER NORMALY FIT TOGETHER ON A 90-, 45-, OR 22.5 FOOT RADIUS CURVE.

5/5/2004
CITY BUSINESS TAX CERTIFICATION NO. 104442 EXP. DATE-6/25/2002

*AS-BUILT 6-15-04 4H

Underground Service Alert
Call: TOLL FREE
1-800 227-2600
TWO WORKING DAYS BEFORE YOU DIG

PRIVATE ENGINEERING NOTE

CONSTRUCTION CONTRACTOR AGREES THAT IN ACCORDANCE WITH GENERALLY ACCEPTED CONSTRUCTION PRACTICES, CONSTRUCTION CONTRACTOR WILL BE REQUIRED TO ASSUME SOLE AND COMPLETE RESPONSIBILITY FOR JOB SITE CONDITIONS DURING THE COURSE OF CONSTRUCTION OF THE PROJECT, INCLUDING SAFETY OF ALL PERSONS AND PROPERTY; THAT THIS REQUIREMENT SHALL BE MADE TO APPLY CONTINUOUSLY AND NOT BE LIMITED TO NORMAL WORKING HOURS; AND CONSTRUCTION CONTRACTOR FURTHER AGREES TO DEFEND, INDEMNIFY AND HOLD DESIGN PROFESSIONAL HARMLESS FROM ANY AND ALL LIABILITY, REAL OR ALLEGED, IN CONNECTION WITH THE PERFORMANCE OF WORK ON THIS PROJECT, EXCEPTING LIABILITY ARISING FROM THE SOLE NEGLIGENCE OF DESIGN PROFESSIONAL.

BENCHMARK

RIVERSIDE COUNTY BENCHMARK, STAMPED VB8-64 AT S.W. COR. OF PLUMMER RD. AND VAN BUREN BLVD. 259.0 FT. SO. OF VAN BUREN BLVD. 205.0 FT. W. OF PLUMMER RD., ON THE TOP OF A 4.0 FT. x 10.0 FT. GRANITE BOULDER A BRASS DISK FLUSH AND MARKED.

ELEV. 1638.123

REGISTERED PROFESSIONAL ENGINEER TREVOR S. DODSON No. 42029 Exp. 3-31-2004 CIVIL STATE OF CALIFORNIA

PLANS PREPARED BY:
M/D/S CONSULTING
MORSE DOKICH SCHULTZ
17320 Redhill Ave. Suite 350 Irvine, CA 92614
Voice: 949-251-8821 FAX: 949-251-0516
PLANNERS ENGINEERS SURVEYORS

PLANS PREPARED UNDER THE SUPERVISION OF:
TREVOR S. DODSON R.C.E. NO.42029 4-2-02 DATE

MARK	REVISIONS:	APPR.	DATE
/2	ADDED JUNCTION STRUCTURE ON SHT 3		
/2	REV. PROTECTION BARRIER & ADDITION PER	DVZ	7-10-03
/1	CONST. C.I.P.P. IN LIEU OF RCP	DVZ	9-3-02

DESIGNED BY | DRAWN BY | CHECKED BY

CITY OF RIVERSIDE
PUBLIC WORKS DEPARTMENT

	APPROVED BY	DATE	BY
	PRINCIPAL ENGINEER	Revised	TC
	PARK DEPARTMENT	–	–
	TRAFFIC DIVISION	–	–
	DEPUTY P.W. DIRECTOR		
	STREET SERVICES	4/6/04	DV

PUBLIC WORKS DIRECTOR
DATE 5/28/04

STORM DRAIN IMPROVEMENT PLANS
PARCEL MAP 30369
LINE "AR"
TITLE SHEET

HORIZ. SCALE: AS SHOWN VERT. SCALE:

ACCOUNT NO.....
D-708
SHEET 1 OF 3

INCLUDED 6-14-04 4H

H:\52600\IMPLANS\sd1\public.dwg 4/02/02

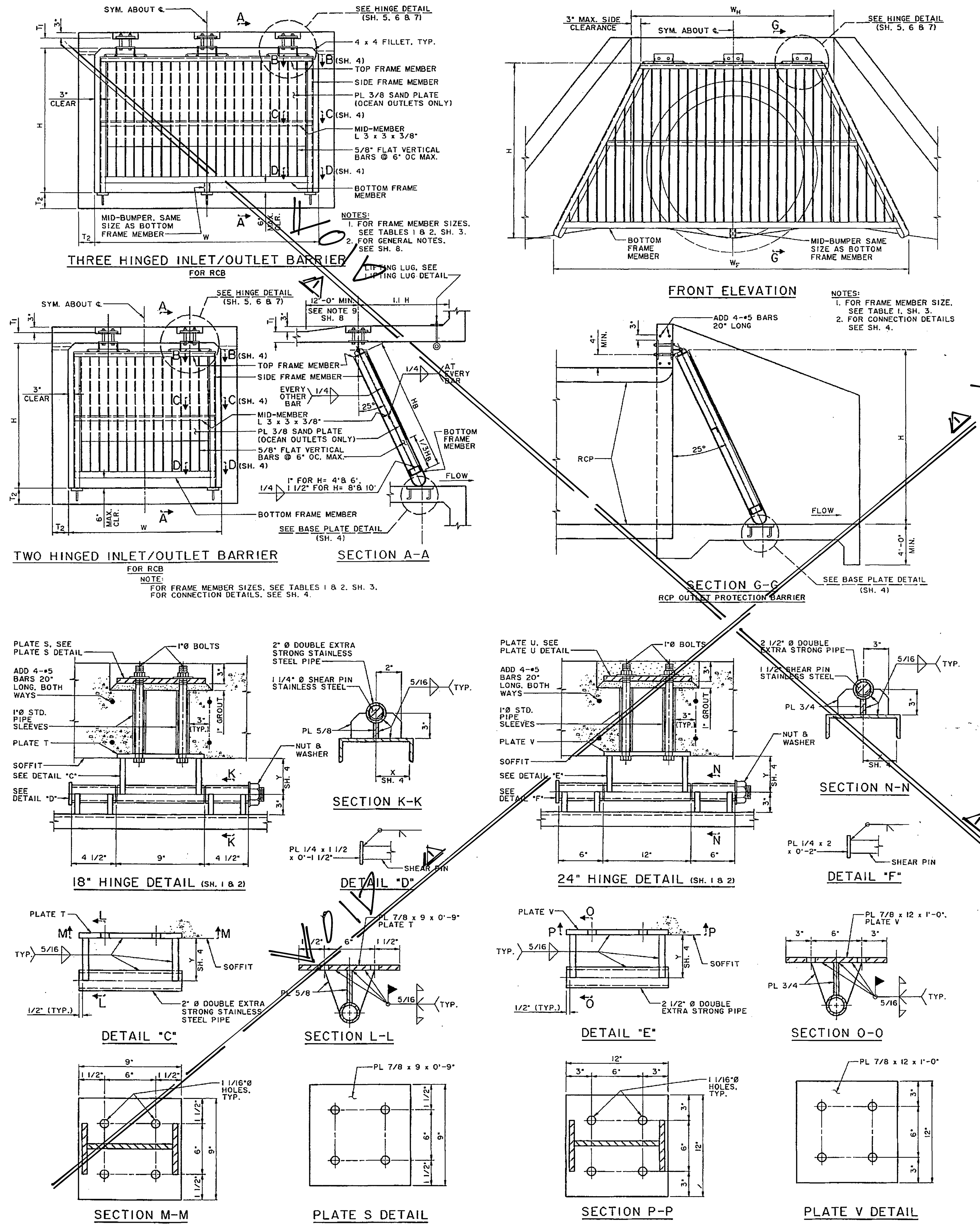

NOTES:
1. FOR FRAME MEMBER SIZES. SEE TABLES 1 & 2. SH. 3.
2. FOR GENERAL NOTES. SEE SH. 8.

NOTE:
FOR FRAME MEMBER SIZES. SEE TABLES 1 & 2. SH. 3.
FOR CONNECTION DETAILS. SEE SH. 4.

NOTES:
1. FOR FRAME MEMBER SIZE. SEE TABLE 1. SH. 3.
2. FOR CONNECTION DETAILS SEE SH. 4.

TABLE 1: STANDARD INLET/OUTLET. BOX OR PIPE. RECTANGULAR OR TRAPEZOIDAL SHAPED PROTECTION BARRIERS.
NOTE 1: FOR TRAPEZOIDAL SHAPED PROTECTION BARRIERS. USE W_H TO DETERMINE NUMBER AND SIZE OF HINGES. AND USE W_F TO DETERMINE REQUIRED FRAME MEMBER SIZES. (FOR W_H AND W_F. SEE SH. 2)

TABLE 1: INLET/OUTLET SLOPED PROTECTION BARRIER

BOX SIZE W x H (FT.)	NO. OF HINGES	HINGE SIZE	VERTICAL BAR SIZE (INCHES)	TOP FRAME MEMBER SIZE	SIDE FRAME MEMBER SIZE	BOTTOM FRAME MEMBER SIZE
4x4	2	12"	1x1/2	C 4x7.25	C 4x7.25	TS 2x2x.250
4x6	2	12"	2x1/2	C 4x7.25	C 4x7.25	TS 2x2x.250
4x8	2	12"	3x1/2	C 5x9	C 5x9	TS 3x3x.250
6x4	2	18"	1x1/2	C 4x7.25	C 4x7.25	TS 2x2x.250
6x6	2	18"	2x1/2	C 4x7.25	C 4x7.25	TS 2.5x2.5x.250
6x8	2	18"	3x1/2	C 5x9	C 5x9	TS 3.5x3.5x.250
6x10	2	18"	4 1/2x1/2	C 6x10.5	C 6x10.5	TS 4.5x4.5x.250
8x4	3	12"	1x1/2	C 4x7.25	C 4x7.25	TS 2x2x.250
8x6	3	12"	2x1/2	C 4x7.25	C 4x7.25	TS 2.5x2.5x.250
8x8	3	12"	3x1/2	C 5x9	C 5x9	TS 3x3x.250
8x10	3	12"	4 1/2x1/2	C 6x10.5	C 6x10.5	TS 4.5x4.5x.250
10x6	3	18"	2x1/2	C 4x7.25	C 4x7.25	TS 2.5x2.5x.250
10x8	3	18"	3x1/2	C 5x9	C 5x9	TS 3.5x3.5x.250
10x10	3	18"	4 1/2x1/2	C 6x10.5	C 6x10.5	TS 4.5x4.5x.250
12x6	3	24"	2x1/2	C 5x9	C 5x9	TS 3x3x.250
12x8	3	24"	3x1/2	C 5x9	C 5x9	TS 3.5x3.5x.250
12x10	3	24"	4 1/2x1/2	C 6x10.5	C 6x10.5	TS 4.5x4.5x.250
14x6	3	24"	2x1/2	C 5x9	C 5x9	TS 3x3x.250
14x8	3	24"	3x1/2	C 6x10.5	C 6x10.5	TS 4x4x.250
14x10	3	24"	4 1/2x1/2	C 7x12.25	C 7x12.25	TS 5x5x.250

TABLE 2: BOX OCEAN OUTLET PROTECTION BARRIERS WITH OR WITHOUT SAND BARRIER PLATE.

TABLE 2: OCEAN OUTLET SLOPED PROTECTION BARRIER

BOX SIZE W x H (FT.)	NO. OF HINGES	HINGE SIZE	VERTICAL BAR SIZE (INCHES)	TOP FRAME MEMBER SIZE	SIDE FRAME MEMBER SIZE	BOTTOM FRAME MEMBER SIZE
4x4	2	12"	2 1/2x5/8	C 5x9	C 5x9	TS 3x3x.250
4x6	2	12"	3 3/4x5/8	C 6x13	C 6x8.2	TS 4x2x.313
4x8	2	12"	5 1/4x5/8	C 8x18.75	C 8x11.5	TS 6x2x.250
6x4	2	18"	2 1/2x5/8	C 6x13	C 6x8.2	TS 4x3x.313
6x6	2	18"	3 3/4x5/8	C 6x13	C 6x8.2	TS 4x4x.500
6x8	2	18"	5 1/4x5/8	C 8x18.75	C 8x11.5	TS 6x4x.375
6x10	2	18"	6 1/2x5/8	C 9x20	C 9x13.4	TS 7x4x.375
8x4	3	12"	2 1/2x5/8	C 5x9	C 5x9	TS 3x3x.250
8x6	3	12"	3 3/4x5/8	C 6x13	C 6x8.2	TS 4x3x.250
8x8	3	12"	5 1/4x5/8	C 8x18.75	C 8x11.5	TS 6x2x.250
8x10	3	12"	6 1/2x5/8	C 9x20	C 9x13.4	TS 7x3x.250
10x6	3	18"	3 3/4x5/8	C 6x13	C 6x8.2	TS 4x4x.313
10x8	3	18"	5 1/4x5/8	C 8x18.75	C 8x11.5	TS 6x4x.313
10x10	3	18"	6 1/2x5/8	C 9x20	C 9x13.4	TS 7x3x.313
12x6	3	24"	3 3/4x5/8	C 7x14.75	C 7x9.8	TS 5x4x.313
12x8	3	24"	5 1/4x5/8	C 8x18.75	C 8x11.5	TS 6x4x.375
12x10	3	24"	6 1/2x5/8	C 9x20	C 9x13.4	TS 7x4x.375
14x6	3	24"	3 3/4x5/8	C 8x18.75	C 8x11.5	TS 6x4x.375
14x8	3	24"	5 1/4x5/8	C 8x18.75	C 8x11.5	TS 6x6x.375
14x10	3	24"	6 1/2x5/8	C 9x20	C 9x13.4	TS 7x5x.500

NOTES
1. WHENEVER RCB SIZE FALLS BETWEEN SIZES SHOWN ON THE TABLE. THE NEXT LARGER SIZE SHALL BE USED.
2. ALL FRAME MEMBERS SHALL BE ASTM A 36 STEEL OR BETTER.
3. ALL HINGE ASSEMBLIES AND BASE PLATES SHALL BE STAINLESS STEEL.
4. THE CONTRACTOR SHALL MAKE ANY NECESSARY MODIFICATIONS TO ALLOW FOR THE SIMPLE REMOVAL OR INSERTION OF HINGE PINS IN ORDER TO INSTALL OR REMOVE THE PROTECTION BARRIER. ENDS OF HINGE PINS SHALL BE THREADED IN ORDER THAT NUTS AND LOCK WASHERS WILL BE FLUSH WITH THE HINGE PIPE. THREADS BEYOND THE NUT FACE SHALL BE DAMAGED TO PREVENT REMOVAL.
5. ALL FRAME MEMBERS SHALL BE GALVANIZED AFTER FABRICATION.
6. IF FIELD WELDS ARE NECESSARY. GALVICON. GALVALLOY OR AGENCY APPROVED EQUAL SHALL BE USED FOR COATING.
7. MID-BUMPER SHALL BE USED FOR 3 HINGED BARRIERS.
8. ANY DEVIATIONS OR MODIFICATIONS TO THIS STANDARD SHALL BE APPROVED BY THE AGENCY.
9. AT OCEAN OUTLETS OR WHEREVER THE TOP SLAB SERVES AS A PUBLIC WALKWAY. THE TOP SLAB THICKNESS SHALL BE INCREASED BY 3" IN ORDER TO PROVIDE A RECESS FOR THE HINGE TOP PLATE. THE RECESS SHALL BE BACKFILLED WITH GROUT AND SMOOTHED AS SHOWN.
10. PROTECTION BARRIERS FOR RCB CONDUITS SHALL BE SLOPED TO SWING OPEN IN THE DIRECTION OF FLOW.
11. MEMBERS SHALL BE SELECTED FROM TABLE 1 UNLESS OTHERWISE NOTED.
12. DESIGN LOADS:
    A. INLET/OUTLET: BULKED EFD = 85 PCF
    B. OCEAN OUTLETS:
        1. 1800 PSF @ SAND PLATE AREA
        2. 600 PSF @ LOWER OPEN AREA

SLOPED PROTECTION BARRIER

N.T.S.

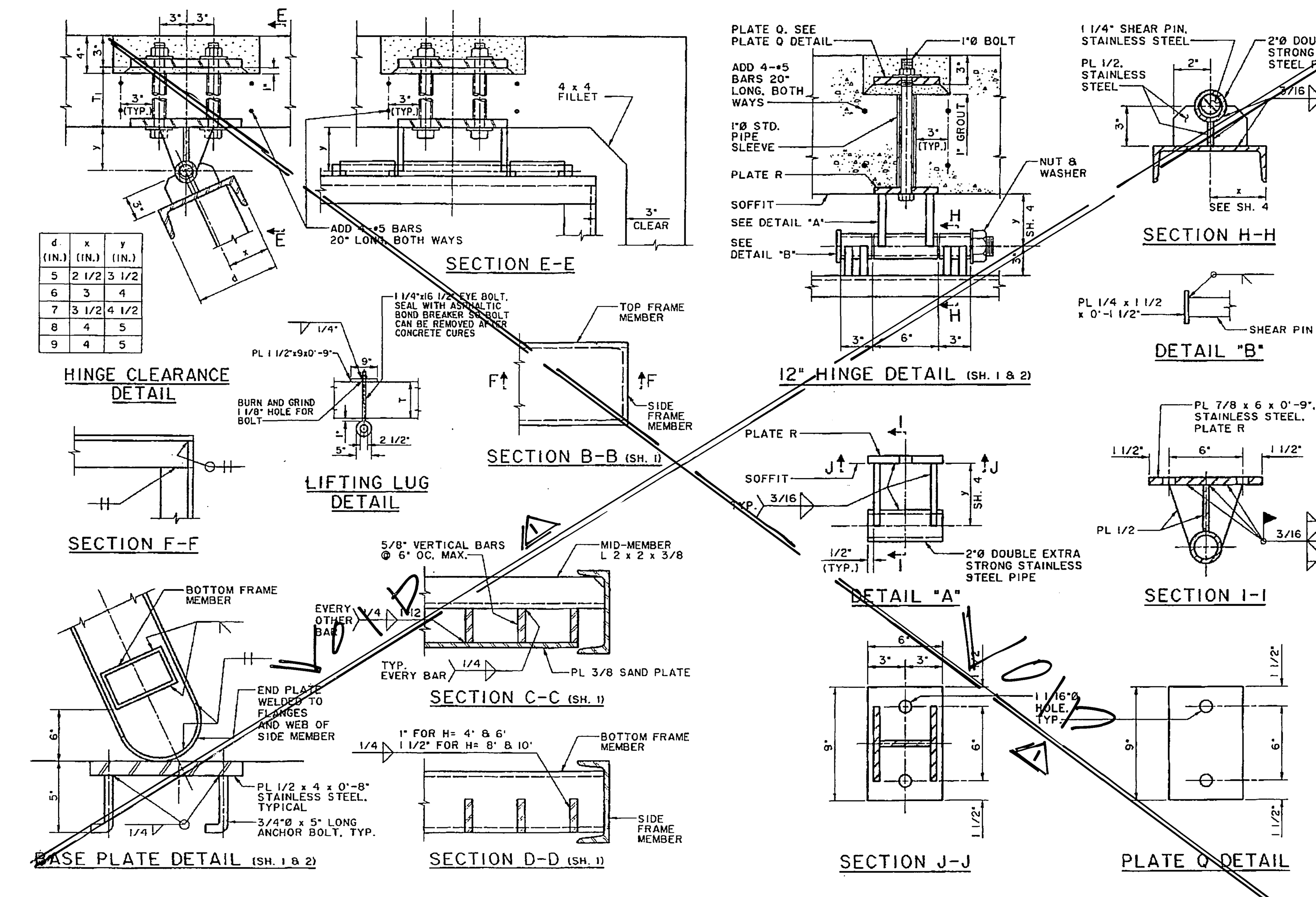

d (IN.)	x (IN.)	y (IN.)
5	2 1/2	3 1/2
6	3	4
7	3 1/2	4 1/2
8	4	5
9	4	5

SLOPED PROTECTION BARRIER

N.T.S.

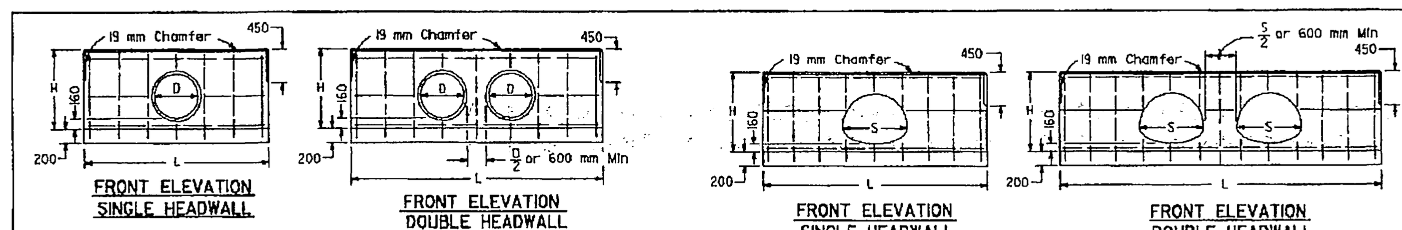

REGISTERED CIVIL ENGINEER
July 1, 1999
PLANS APPROVAL DATE
The State of California or its officers or agents shall not be responsible for the accuracy or completeness of electronic copies of this plan sheet.

D	H	SINGLE L	SINGLE Steel	SINGLE Conc	DOUBLE L	DOUBLE Steel	DOUBLE Conc
mm	mm	mm	kg	m3	mm	kg	m3
300	810	1500	16	0.45	2500	24	0.74
375	885	1800	18	0.56	2950	28	0.91
450	960	2100	22	0.68	3250	34	1.04
525	1035	2250	26	0.76	3550	40	1.18
600	1110	2550	34	0.90	3850	46	1.32
675	1185	2850	38	1.04	4300	52	1.53
750	1260	3000	40	1.13	4600	54	1.69
825	1335	3300	44	1.29	4900	58	1.86
900	1410	3600	46	1.46	5200	66	2.03
975	1485	3750	58	1.57	5500	78	2.21
1050	1560	4050	62	1.75	5800	84	2.39
1125	1635	4350	66	1.94	6100	88	2.58
1200	1710	4500	70	2.06	6400	90	2.78
1275	1785	4800	80	2.26	6850	102	3.06
1350	1860	5100	84	2.47	7150	108	3.27

STRAIGHT HEADWALLS

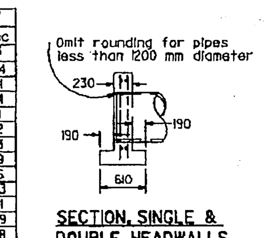

CMP ARCH SIZE	SINGLE H	SINGLE L	SINGLE Steel	SINGLE Conc	DOUBLE L	DOUBLE Steel	DOUBLE Conc
mm	mm	mm	kg	m3	mm	kg	m3
530x380	885	2000	20	0.61	3000	28	0.91
610x460	960	2300	22	0.74	3500	32	1.10
710x510	1010	2600	28	0.85	4100	40	1.32
885x610	1110	3200	38	1.11	4700	54	1.58
1060x740	1235	3800	50	1.40	5500	66	1.95
1240x840	1335	4400	58	1.70	6400	78	2.37
1440x970	1460	5200	70	2.13	7450	96	2.91
1620x1100	1585	5800	80	2.50	8200	104	3.36
1800x1200	1685	6400	88	2.89	9100	116	3.88

STRAIGHT HEADWALLS

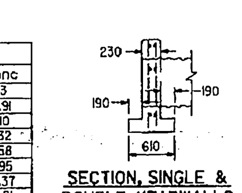

NOTES
1. No deduction made in quantities for thickness of pipe walls.
2. All reinforcing steel #13 bars. All vertical and horizontal tie bars 450 mm maximum spacing.
3. Length of wall "W" may be varied to suit conditions encountered in the field, and straight line interpolation may be used to calculate quantities.
4. Quantities are for design purposes only.

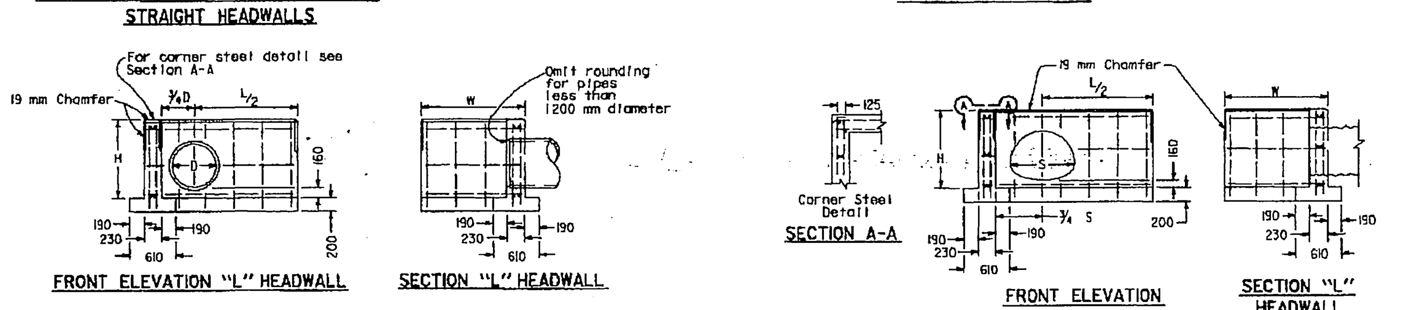

D	H	L/2	1000 Steel	1000 Conc	1450 Steel	1450 Conc	1900 Steel	1900 Conc	2350 Steel	2350 Conc	2800 Steel	2800 Conc
			LENGTH OF W									
mm	mm	mm	kg	m3	kg	m3	kg	m3	kg	m3	kg	m3
300	810	750	22	0.59	26	0.73	—	—	—	—	—	—
375	885	900	24	0.68	28	0.83	—	—	—	—	—	—
450	960	1050	28	0.78	32	0.94	—	—	—	—	—	—
525	1035	1125	32	0.86	40	1.02	—	—	—	—	—	—
600	1110	1275	38	0.96	44	1.13	48	1.30	—	—	—	—
675	1185	1425	40	1.07	46	1.25	50	1.43	—	—	—	—
750	1260	1500	42	1.16	48	1.34	52	1.53	60	1.72	—	—
825	1335	1650	46	1.28	52	1.47	60	1.67	66	1.86	—	—
900	1410	1800	48	1.40	54	1.61	62	1.81	68	2.01	74	2.21
975	1485	1875	—	—	66	1.71	74	1.92	80	2.13	88	2.33
1050	1560	2025	—	—	68	1.85	76	2.07	84	2.28	92	2.50
1125	1635	2175	—	—	—	—	78	2.22	88	2.45	94	2.67
1200	1710	2250	—	—	—	—	84	2.34	94	2.57	100	2.81
1275	1785	2400	—	—	—	—	—	—	96	2.75	102	2.98
1350	1860	2550	—	—	—	—	—	—	102	2.92	110	3.17

"L" HEADWALLS

CIRCULAR PIPE CULVERT HEADWALLS

CMP ARCH SIZE	H	L/2	1000 Steel	1000 Conc	1450 Steel	1450 Conc	1900 Steel	1900 Conc	2350 Steel	2350 Conc	2800 Steel	2800 Conc
			LENGTH OF W									
mm	mm	mm	kg	m3	kg	m3	kg	m3	kg	m3	kg	m3
530x380	885	1000	26	0.74	30	0.89	34	1.04	40	1.18	44	1.33
610x460	960	1150	28	0.84	32	1.00	36	1.15	42	1.30	50	1.46
710x510	1010	1300	32	0.93	36	1.09	40	1.25	44	1.41	52	1.57
885x610	1110	1600	44	1.13	50	1.30	54	1.47	62	1.64	70	1.81
1060x740	1235	1900	52	1.36	58	1.54	62	1.72	70	1.90	76	2.09
1240x840	1335	2200	58	1.58	64	1.77	70	1.96	76	2.16	82	2.35
1440x970	1460	2600	64	1.89	72	2.09	78	2.30	84	2.51	92	2.71
1620x1100	1585	2900	84	2.16	90	2.38	96	2.60	104	2.82	112	3.04
1800x1200	1685	3200	90	2.44	96	2.66	104	2.89	112	3.12	120	3.35

"L" HEADWALLS

CORRUGATED METAL PIPE ARCH CULVERT HEADWALLS

STATE OF CALIFORNIA
DEPARTMENT OF TRANSPORTATION

PIPE HEADWALLS

NO SCALE

ALL DIMENSIONS ARE IN MILLIMETERS UNLESS OTHERWISE SHOWN

D89

HEADWALL DETAILS

N.T.S.

*AS-BUILT 6-15-04 4H

CITY BUSINESS TAX CERTIFICATION NO. 104442 EXP. DATE ~~5/25/2002~~ 5/5/2004

Underground Service Alert
Call: TOLL FREE
1-800
227-2600
TWO WORKING DAYS BEFORE YOU DIG

PRIVATE ENGINEERING NOTE

CONSTRUCTION CONTRACTOR AGREES THAT IN ACCORDANCE WITH GENERALLY ACCEPTED CONSTRUCTION PRACTICES, CONSTRUCTION CONTRACTOR WILL BE REQUIRED TO ASSUME SOLE AND COMPLETE RESPONSIBILITY FOR JOB SITE CONDITIONS DURING THE COURSE OF CONSTRUCTION OF THE PROJECT, INCLUDING SAFETY OF ALL PERSONS AND PROPERTY; THAT THIS REQUIREMENT SHALL BE MADE TO APPLY CONTINUOUSLY AND NOT BE LIMITED TO NORMAL WORKING HOURS, AND CONSTRUCTION CONTRACTOR FURTHER AGREES TO DEFEND, INDEMNIFY AND HOLD DESIGN PROFESSIONAL HARMLESS FROM ANY AND ALL LIABILITY, REAL OR ALLEGED, IN CONNECTION WITH THE PERFORMANCE OF WORK ON THIS PROJECT, EXCEPTING LIABILITY ARISING FROM THE SOLE NEGLIGENCE OF DESIGN PROFESSIONAL.

BENCHMARK

RIVERSIDE COUNTY BENCHMARK, STAMPED VB8-64 AT S.W. COR. OF PLUMMER RD. AND VAN BUREN BLVD. 259.0 FT. SO. OF VAN BUREN BLVD. 205.0 FT. W. OF PLUMMER RD., ON THE TOP OF A 4.0 FT. x 10.0 FT. GRANITE BOULDER A BRASS DISK FLUSH AND MARKED.

ELEV. 1638.123

REGISTERED PROFESSIONAL ENGINEER
TREVOR S. DODSON
No. 42029
Exp. 3-31-2004
CIVIL
STATE OF CALIFORNIA

PLANS PREPARED BY:
MDS CONSULTING
MORSE DOKICH SCHULTZ
17320 Redhill Ave. Suite 350
Irvine, CA 92614
Voice: 949-251-8821
FAX: 949-251-0516
PLANNERS ENGINEERS SURVEYORS

PLANS PREPARED UNDER THE SUPERVISION OF:
TREVOR S. DODSON R.C.E. NO.42029 DATE 4.2.02

MARK	REVISIONS:	APPR.	DATE
1	DELETED SLOPED PROTECTION BARRIER	RJZ	7-10-03

DESIGNED BY | DRAWN BY | CHECKED BY

CITY OF RIVERSIDE
PUBLIC WORKS DEPARTMENT

APPROVED BY	DATE	BY
PRINCIPAL ENGINEER	5/28/2002	
PARK DEPARTMENT	–	–
TRAFFIC DIVISION	–	–
DEPUTY P.W. DIRECTOR		
STREET SERVICES	4/2/02	

PUBLIC WORKS DIRECTOR
DATE 5/28/02

STORM DRAIN IMPROVEMENT PLANS
PARCEL MAP 30369
LINE "AR"
DETAILS

HORIZ. SCALE: AS SHOWN VERT. SCALE:

ACCOUNT NO..........
D-708
SHEET 2 OF 3

INDEXED 6-04-02 4H I:\52600\IMPLANS\sd2\public.dwg 4/02/02

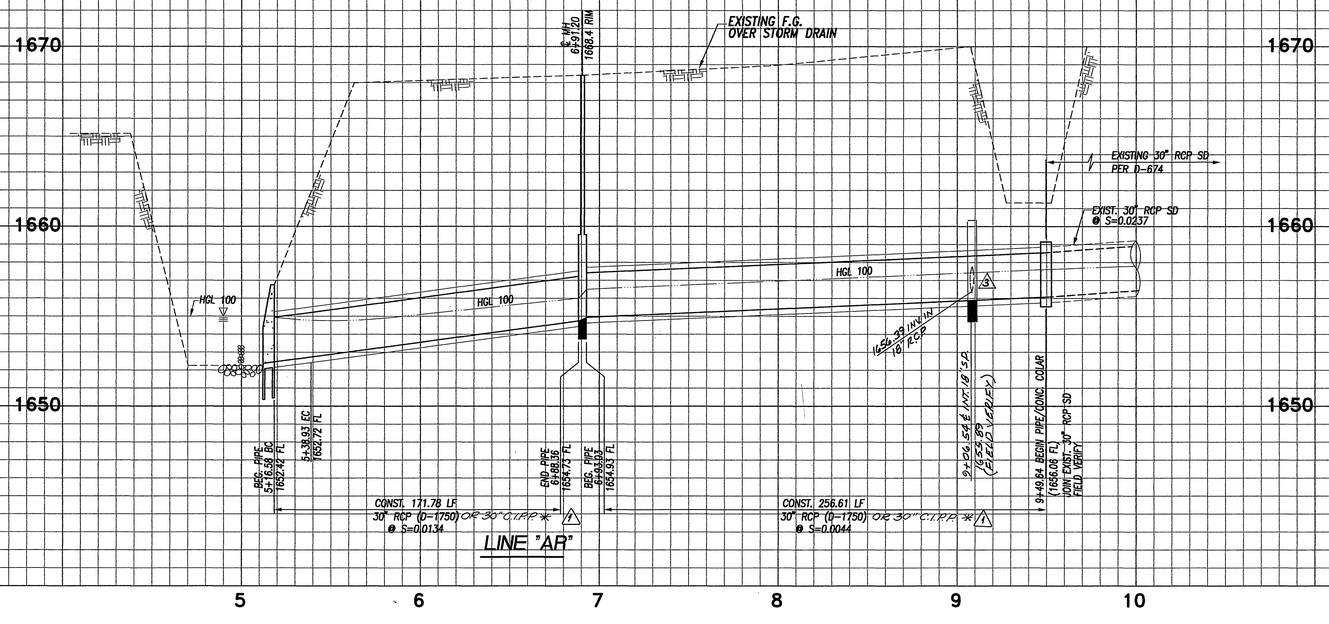

SCALE 1"=40'

PROFILE SCALES
HORIZ. 1"=40'
VERT. 1"=4'
PLAN SCALE 1"=40'

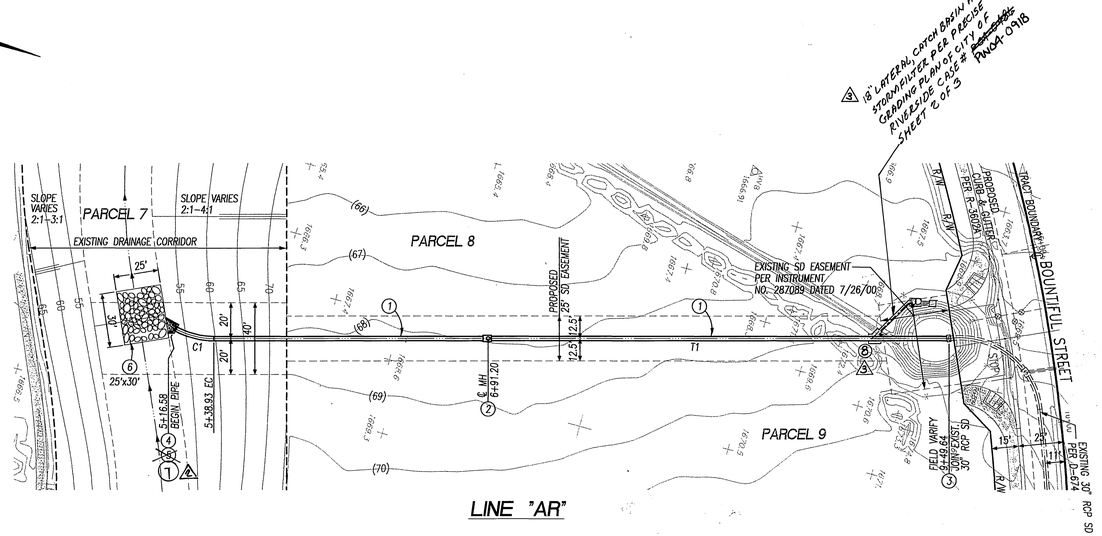

3 18" LATERAL, CATCH BASIN AND STORM FILTER PER PRECISE GRADING PLAN OF CITY OF RIVERSIDE CASE # ~~P000-000~~ PMGA-0918 SHEET 2 OF 3

HYDRAULIC DATA

LINE	STATION TO STATION	DIA. (in)	Q100 (cfs)	n	SLOPE (ft/ft)	dn (ft)	Vn (fps)	Vcr (fps)	dcr (ft)	sf (ft/ft)	V (fps)
"AR"	5+16.58 TO 6+88.36	30	21.7	0.013	0.0134	1.2	9.5	6.6	1.6	–	–
"AR"	6+93.03 TO 9+49.64	30	21.7	0.013	0.0044	1.7	6.2	6.6	1.6	–	–
1 ** "AE"	5+16.58 TO 6+88.36	30	21.7	0.015	0.0134	1.2	8.9	6.6	1.6	–	–
1 ** "AR"	6+93.03 TO 9+49.64	30	21.7	0.015	0.0044	1.8	5.8	6.6	1.6	–	–

** HYDRAULIC DATA IF C.I.P.P. IS USED

CONSTRUCTION NOTES

1. CONSTRUCT 30" RCP (D-LOAD PER PLAN) OR 30" C.I.P.P. *
2. CONSTRUCT MANHOLE EZ PER CITY STD. 431
3. CONSTRUCT CONCRETE COLLAR PER CITY STD. 424
4. CONSTRUCT HEADWALL PER CALTRANS STD. D89, SEE SHEET 2
5. ~~CONSTRUCT SLOPED PROTECTION BARRIER PER APWA STD. 360-0, SEE SHEET 2~~
6. CONSTRUCT GROUTED RIP-RAP (D50= 150 LBS. (15") 23" THICK)

1 * SEE C.I.P.P. NOTES ON SHEET 1

2 (7) CONSTRUCT PROTECTION BARRIER PER LOS ANGELES FLOOD CONTROL DISTRICT DWG. # 2-D761.1, SHOWN ON SHEET 2A

3 (8) CONSTRUCT JUNCTION STRUCTURE B PER CITY OF RIVERSIDE STD. DWG. 421

COURSE DATA		
LINE	BEARING	DISTANCE
T1	N15°18'51"W	410.71'

CURVE TABLE				
#	Δ	R	L	T
C1	28°27'40"	45.00'	22.35'	11.41'

* AS-BUILT @ 6-19-04 FH

5/5/2004
CITY BUSINESS TAX CERTIFICATION NO. 104442 EXP. DATE ~~5/25/2002~~

Underground Service Alert
Call: TOLL FREE
1-800 227-2600
TWO WORKING DAYS BEFORE YOU DIG

PRIVATE ENGINEERING NOTE

CONSTRUCTION CONTRACTOR AGREES THAT IN ACCORDANCE WITH GENERALLY ACCEPTED CONSTRUCTION PRACTICES, CONSTRUCTION CONTRACTOR WILL BE REQUIRED TO ASSUME SOLE AND COMPLETE RESPONSIBILITY FOR JOB SITE CONDITIONS DURING THE COURSE OF CONSTRUCTION OF THE PROJECT, INCLUDING SAFETY OF ALL PERSONS AND PROPERTY; THAT THIS REQUIREMENT SHALL BE MADE TO APPLY CONTINUOUSLY AND NOT BE LIMITED TO NORMAL WORKING HOURS, AND CONSTRUCTION CONTRACTOR FURTHER AGREES TO DEFEND, INDEMNIFY AND HOLD DESIGN PROFESSIONAL HARMLESS FROM ANY AND ALL LIABILITY, REAL OR ALLEGED, IN CONNECTION WITH THE PERFORMANCE OF WORK ON THIS PROJECT, EXCEPTING LIABILITY ARISING FROM THE SOLE NEGLIGENCE OF DESIGN PROFESSIONAL.

BENCHMARK

RIVERSIDE COUNTY BENCHMARK, STAMPED VB8-64 AT S.W. COR. OF PLUMMER RD. AND VAN BUREN BLVD. 259.0 FT. SO. OF VAN BUREN BLVD. 205.0 FT. W. OF PLUMMER RD., ON THE TOP OF A 4.0 FT. x 10.0 FT. GRANITE BOULDER A BRASS DISK FLUSH AND MARKED.

ELEV. 1638.123

REGISTERED PROFESSIONAL ENGINEER TREVOR S. DODSON No. 42029 Exp. 3-31-2004 CIVIL STATE OF CALIFORNIA

PLANS PREPARED BY:
MDS CONSULTING
PLANNERS ENGINEERS SURVEYORS
MORSE DOKICH SCHULTZ
17320 Redhill Ave., Suite 350, Irvine, CA 92614
Voice: 949-251-8821 FAX: 949-251-0516

PLANS PREPARED UNDER THE SUPERVISION OF:
TREVOR S. DODSON R.C.E. NO.42029 DATE 4/29/02

MARK	REVISIONS	APPR.	DATE
3	ADDED JUNCTION STRUCTURE		
2	REV. PROTECTION BARRIER	RVZ	7-10-03
1	C.I.P.P. IN LIEU OF RCP	RVZ	9-3-02

DESIGNED BY DRAWN BY CHECKED BY

CITY OF RIVERSIDE
PUBLIC WORKS DEPARTMENT

APPROVED BY	DATE	BY
PRINCIPAL ENGINEER	5/20/04	
PARK DEPARTMENT	–	–
TRAFFIC DIVISION	–	–
DEPUTY P.W. DIRECTOR		
STREET SERVICES	5/11/2	

PUBLIC WORKS DIRECTOR
DATE 5/19/02

STORM DRAIN IMPROVEMENT PLANS
PARCEL MAP 30369
LINE "AR"
PLAN & PROFILE

ACCOUNT NO.....
D-708
SHEET 3 OF 3

HORIZ. SCALE: AS SHOWN VERT. SCALE:

INDEXED 6-04-'3 FH

E:\52600\IMPLANS\sd3?public.dwg 4/29/02

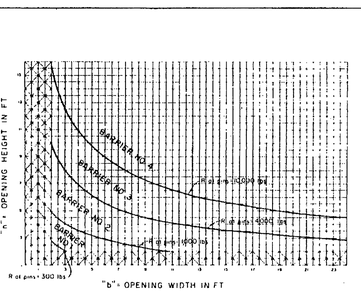

The curves represent reactions at the sheer pins due to hydrostatic head on the debris-obstructed barriers.
The height and width of the openings determines which barrier (see sheet 3), numbers 1, 2, or 3 between the curves, or number 4 beyond the curves, is to be used.
For sizes of openings falling within the crosshatched area, and if approved by the District, protection bars shall be placed in accordance with District Std Dwg 2-0175 with the bars positioned horizontally at 6½" c.c

Note Barrier number shall be specified on project drawings

REVISIONS		
MARK	DATE	DESCRIPTION

SUPERSEDES DRAWING 2-D261 DATED SEPT., 1959

LOS ANGELES COUNTY FLOOD CONTROL DISTRICT
PROTECTION BARRIER
DESIGN CHART

SCALE	DATE	DWG. NO. 2-D261
NONE	JAN 10, '67	SHEET 1 OF 3

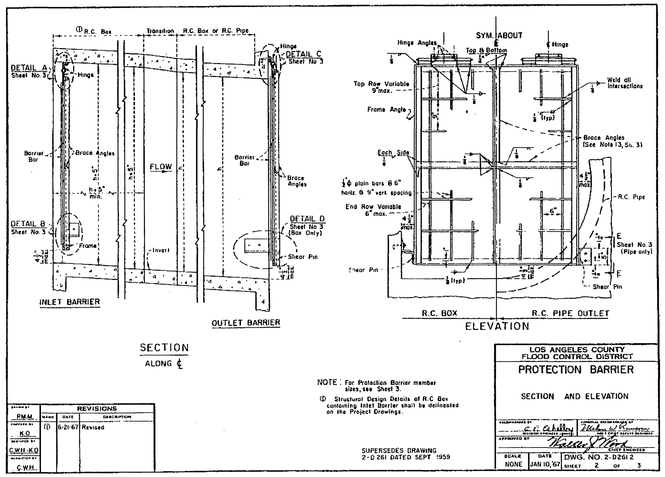

SECTION ALONG ℄

ELEVATION

NOTE: For Protection Barrier member sizes, see Sheet 3.
Ⓓ Structural Design Details of R.C. Box containing Inlet Barrier shall be delineated on the Project Drawings.

REVISIONS		
MARK	DATE	DESCRIPTION
Ⓓ	6-21-67	Revised

SUPERSEDES DRAWING 2-D 261 DATED SEPT 1959

LOS ANGELES COUNTY FLOOD CONTROL DISTRICT
PROTECTION BARRIER
SECTION AND ELEVATION

SCALE	DATE	DWG. NO. 2-D261.2
NONE	JAN 10, '67	SHEET 2 OF 3

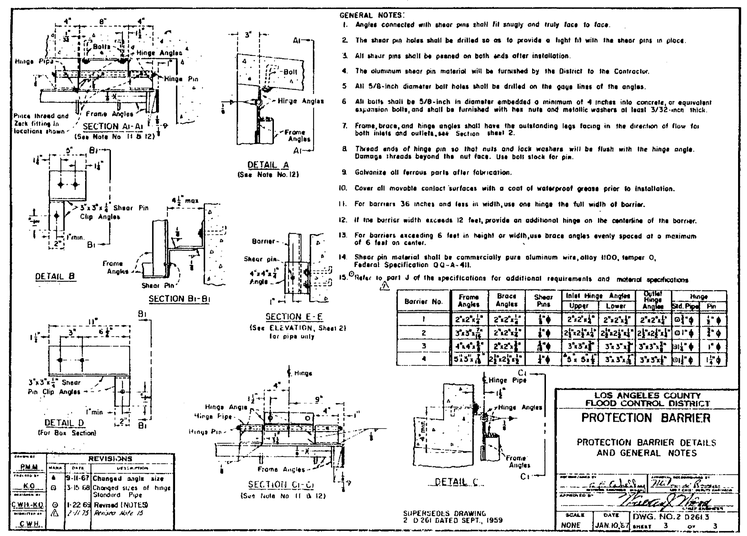

GENERAL NOTES:
1. Angles connected with sheer pins shall fit snugly and truly face to face.
2. The sheer pin holes shall be drilled so as to provide a tight fit with the sheer pins in place.
3. All sheer pins shall be peened on both ends after installation.
4. The aluminum sheer pin material will be furnished by the District to the Contractor.
5. All 5/8-inch diameter bolt holes shall be drilled on the gage lines of the angles.
6. All bolts shall be 5/8-inch in diameter embedded a minimum of 4 inches into concrete, or equivalent expansion bolts, and shall be furnished with hex nuts and metallic washers at least 3/32-inch thick.
7. Frame, brace, and hinge angles shall have the outstanding legs facing in the direction of flow for both inlets and outlets, see Section sheet 2.
8. Thread ends of hinge pin so that nuts and lock washers will be flush with the hinge angle. Damage threads beyond the nut face. Use bolt stock for pin.
9. Galvanize all ferrous parts after fabrication.
10. Cover all movable contact surfaces with a coat of waterproof grease prior to installation.
11. For barriers 36 inches and less in width, use one hinge the full width of barrier.
12. If the barrier width exceeds 12 feet, provide an additional hinge on the centerline of the barrier.
13. For barriers exceeding 6 feet in height or width, use brace angles evenly spaced at a maximum of 6 feet on center.
14. Sheer pin material shall be commercially pure aluminum wire, alloy 1100, temper O, Federal Specification QQ-A-411.
15. Refer to part J of the specifications for additional requirements and material specifications

Barrier No.	Frame Angles	Brace Angles	Sheer Pins	Inlet Hinge Angles Upper	Inlet Hinge Angles Lower	Outlet Hinge Angles	Hinge Bot. Pipe	Hinge Pin
1	2"x2"x¼"	2"x2"x¼"	1"ϕ	2"x2"x¼"	2"x2"x¼"	2"x2"x¼"	0"ϕ	1"ϕ
2	3"x3"x¼"	2"x2"x¼"	1"ϕ	2"x2"x¼"	2"x2"x¼"	2"x2"x¼"	0"ϕ	1"ϕ
3	4"x4"x¼"	2"x2"x¼"	1"ϕ	3"x3"x¼"	3"x3"x¼"	3"x3"x¼"	1"ϕ	1"ϕ
4	5"x5"x⅝	2"x2"x¼"	1"ϕ	5"x 5"x½"	3"x3"x¼"	3"x3"x¼"	1½"ϕ	1½"ϕ

REVISIONS			
MARK	DATE	BY	DESCRIPTION
A	9-11-67		Changed angle size
B	3-15-68		Changed sizes of hinge Standard Pipe
Ⓒ	1-22-68		Revised (NUTES
Ⓓ	1-17-73		Revised Note 15

SUPERSEDES DRAWING 2 D 261 DATED SEPT., 1959

LOS ANGELES COUNTY FLOOD CONTROL DISTRICT
PROTECTION BARRIER
PROTECTION BARRIER DETAILS AND GENERAL NOTES

SCALE	DATE	DWG. NO.2 D261.3
NONE	JAN 10,'67	SHEET 3 OF 3

PROTECTION BARRIER DETAIL

PER LOS ANGELES FLOOD CONTROL DISTRICT DWG. NO. 2-D261.1
NOT TO SCALE

*AS-BUILT 6-15-04 ff

CALL BEFORE YOU DIG
Underground Service Alert
Call: TOLL FREE
1-800 227-2600
TWO WORKING DAYS BEFORE YOU DIG

PRIVATE ENGINEERING NOTE

CONSTRUCTION CONTRACTOR AGREES THAT IN ACCORDANCE WITH GENERALLY ACCEPTED CONSTRUCTION PRACTICES, CONSTRUCTION CONTRACTOR WILL BE REQUIRED TO ASSUME SOLE AND COMPLETE RESPONSIBILITY FOR JOB SITE CONDITIONS DURING THE COURSE OF CONSTRUCTION OF THE PROJECT, INCLUDING SAFETY OF ALL PERSONS AND PROPERTY; THAT THIS REQUIREMENT SHALL BE MADE TO APPLY CONTINUOUSLY AND NOT BE LIMITED TO NORMAL WORKING HOURS, AND CONSTRUCTION CONTRACTOR FURTHER AGREES TO DEFEND, INDEMNIFY AND HOLD DESIGN PROFESSIONAL HARMLESS FROM ANY AND ALL LIABILITY, REAL OR ALLEGED, IN CONNECTION WITH THE PERFORMANCE OF WORK ON THIS PROJECT, EXCEPTING LIABILITY ARISING FROM THE SOLE NEGLIGENCE OF DESIGN PROFESSIONAL.

BENCHMARK

RIVERSIDE COUNTY BENCHMARK, STAMPED V86-64 AT S.W. COR. OF PLUMMER RD. AND VAN BUREN BLVD. 259.0 FT. SO. OF VAN BUREN BLVD. 205.0 FT. W. OF PLUMMER RD., ON THE TOP OF A 4.0 FT. x 10.0 FT. GRANITE BOULDER A BRASS DISK FLUSH AND MARKED.

ELEV. 1638.123

REGISTERED PROFESSIONAL ENGINEER TREVOR S. DODSON No. 42029 Exp. 3-31-2004 CIVIL STATE OF CALIFORNIA

PLANS PREPARED BY:
MDS CONSULTING
MORSE DOKICH SCHULTZ
17320 Redhill Ave. Suite 350 Irvine, CA 92614
Voice: 949-251-8821 FAX: 949-251-0516
PLANNERS ENGINEERS SURVEYORS

PLANS PREPARED UNDER THE SUPERVISION OF:
TREVOR S. DODSON R.C.E. NO.42029 DATE 6.2.03

MARK	REVISIONS:	APPR.	DATE

DESIGNED BY DRAWN BY CHECKED BY

CITY OF RIVERSIDE
PUBLIC WORKS DEPARTMENT

	DATE	BY
APPROVED BY		
PRINCIPAL ENGINEER	7/8/03	
PARK DEPARTMENT	–	–
TRAFFIC DIVISION	–	–
STREET SERVICES	–	–

CITY ENGINEER
DATE 7/8/03

STORM DRAIN IMPROVEMENT PLANS
PARCEL MAP 30369
LINE "AR"
DETAILS

HORIZ. SCALE: AS SHOWN VERT. SCALE:

ACCOUNT NO.....
D-708
SHEET 2A OF 3

I:\52600\IMPLANS\sd2A3public.dwg 6/02/03