## GENERAL NOTES:

1. IT SHALL BE THE RESPONSIBILITY OF THE CONTRACTOR TO CLEAR THE RIGHT-OF-WAY IN ACCORDANCE WITH THE SPECIAL PROVISIONS OF LAW AS IT AFFECTS EACH UTILITY INCLUDING IRRIGATION LINES AND APPURTENANCES AND AT NO COST TO THE CITY.
2. CONSTRUCTION SHALL BE IN ACCORDANCE WITH THE CITY OF RIVERSIDE DEPARTMENT OF PUBLIC WORKS, STANDARD DRAWINGS, AND THE STANDARD SPECIFICATIONS FOR PUBLIC WORKS, CONSTRUCTION, CURRENT EDITION AND THE SPECIAL PROVISIONS FOR SYCAMORE CANYON COMMUNITY FACILITIES DISTRICT NO. 92-1.
3. THE PRIVATE ENGINEER SIGNING THESE PLANS IS RESPONSIBLE FOR ASSURING THE ACCURACY AND ACCEPTABILITY OF THE WORK HEREON. IN THE EVENT OF DISCREPANCIES ARISING DURING CONSTRUCTION, THE PRIVATE ENGINEER SHALL BE RESPONSIBLE FOR DETERMINING AN ACCEPTABLE SOLUTION AND REVISING THE PLANS FOR APPROVAL BY THE CITY.
4. THE CONTRACTOR SHALL BE RESPONSIBLE FOR PRESERVING OR RE-ESTABLISHING AND REFERENCING SURVEY MONUMENTS DESTROYED, DISTURBED OR BURIED AS A RESULT OF CONSTRUCTION SHOWN HEREON.
5. ANY TRAFFIC CONTROL STRIPING OBLITERATED AND OR BADLY WORN DURING CONSTRUCTION SHALL BE RESTORED BY THE CONTRACTOR WITHIN FIVE DAYS AFTER NOTIFICATION FROM THE CITY INSPECTORS.
6. THE CONTRACTOR SHALL CALL IN A LOCATION REQUEST TO UNDERGROUND SERVICE ALERT (USA), PHONE # 1-800-227-2600, TWO WORKING DAYS BEFORE DIGGING. NO CONSTRUCTION PERMIT WILL BE ISSUED BY THE PUBLIC WORKS DEPARTMENT INVOLVING EXCAVATION FOR UNDERGROUND FACILITIES UNLESS THE APPLICANT HAS BEEN PROVIDED AN INQUIRY IDENTIFICATION NUMBER BY U.S.A.
7. CONTRACTOR IS TO VERIFY EXISTING GAS, SEWER AND WATER ELEVATIONS IN SYCAMORE CANYON BLVD. PRIOR TO CONSTRUCTION.
8. BEFORE THE RIP RAP AT THE OUTLET OF ANY DRAINAGE STRUCTURE IS ACCEPTED, IT SHALL BE TESTED UNDER FLOWS AS CLOSE AS POSSIBLE TO DESIGN CONDITIONS WITH WATER OBTAINED FROM FIRE HYDRANTS IN THE IMMEDIATE AREA.
9. PIPE BEDDING TO BE CASE I PER CITY OF RIVERSIDE STD. NO. 452.
10. NO PERSON SHALL PERFORM ANY CONSTRUCTION ACTIVITY OR INSTALL ANY OBJECTS WITHIN THE PUBLIC RIGHT-OF-WAY OR EASEMENTS OF THE CITY OF RIVERSIDE WITHOUT A VALID CONSTRUCTION PERMIT OR, A STREET OPENING PERMIT OR AN ENCROACHMENT PERMIT ISSUED BY THE CITY'S PUBLIC WORKS DEPARTMENT.

## STORM DRAIN CONSTRUCTION NOTES ⬡

1. INSTALL 54" R.C.P.(1500-D) PIPE BEDDING (CASE I) PER CITY OF RIVERSIDE STD. DWG. NO. 452.
2. CONSTRUCT TYPE "B" STRAIGHT WINGWALL PER CALTRANS STD. D90. (STANDARD PER DETAIL "B" ON SHEET 2). MODIFY AS SHOWN ON SECTION "F"-"F" ON SHEET 3.
3. CONSTRUCT 1/4 TON GROUTED RIP-RAP, WITH 18" THICK NO. 1 BACKING MATERIAL PER CALTRANS SPECIFICATIONS. (METHOD "A" PLACEMENT) (THICKNESS SHOWN ON PLAN)
4. CONSTRUCT MANHOLE JM PER CITY OF RIVERSIDE STANDARD DWG. NO. 432. (SEE DETAIL "A" ON SHEET 1.
5. CONSTRUCT TIMBER BULKHEAD PER CITY OF RIVERSIDE STD. DWG. 456.
6. CONSTRUCT 1/4 TON UNGROUTED RIP-RAP (THICKNESS SHOWN ON PLAN) WITH 18" THICK NO. 1 BACKING MATERIAL PER CALTRANS SPECIFICATIONS. (METHOD "A" PLACEMENT)
7. INSTALL 36" RCP (1500-D). PIPE BEDDING (CASE I) PER CITY OF RIVERSIDE STD. DWG. NO. 452.
8. INSTALL CONCRETE COLLAR PER CITY OF RIVERSIDE STD. DWG. NO. 424.
9. CONSTRUCT 12' DRIVEWAY APPROACH PER CITY OF RIVERSIDE STD. DWG. NO. 302.
10. INSTALL TEMPORARY CHAIN LINK FENCE (H=6'). SEE "NOTICE TO CONTRACTOR-FEDERAL PROTECTION OF SYCAMORE CANYON WILDERNESS PARK SITE" ON SHEET 1.
11. INSTALL TEMPORARY CHAIN LINK GATE (W=14'). SEE "NOTICE TO CONTRACTOR-FEDERAL PROTECTION OF SYCAMORE CANYON WILDERNESS PARK SITE" ON SHEET 1.

## NOTICE TO CONTRACTOR

THE FOLLOWING ORGANIZATIONS ARE WITHIN THE PROJECT AREA:

CITY OF RIVERSIDE, PUBLIC WORKS
CITY OF RIVERSIDE, ELEC. DEPT.
WESTERN MUNICIPAL WATER DIST.
VERIZON

THE EXISTENCE AND LOCATIONS OF ALL UNDERGROUND UTILITIES (UTILITY PIPES, STRUCTURES, ETC, SHOWN ON THESE) PLANS (MAIN LINES ONLY-NO SERVICE LATERALS) WERE ASCERTAINED BY A REVIEW OF RECORDS AND ARE APPROXIMATE. NEITHER THE CITY NOR THE ENGINEER ASSUMES ANY RESPONSIBILITY FOR UTILITIES NOT SHOWN OR NOT IN THE LOCATION SHOWN.

THE CONTRACTOR IS REQUIRED TO TAKE DUE PRECAUTIONARY MEASURES TO PROTECT ALL UTILITIES SHOWN ON THESE PLANS AND/OR ANY OTHER UNDERGROUND UTILITIES NOT OF RECORD OR NOT SHOWN ON THESE PLANS.

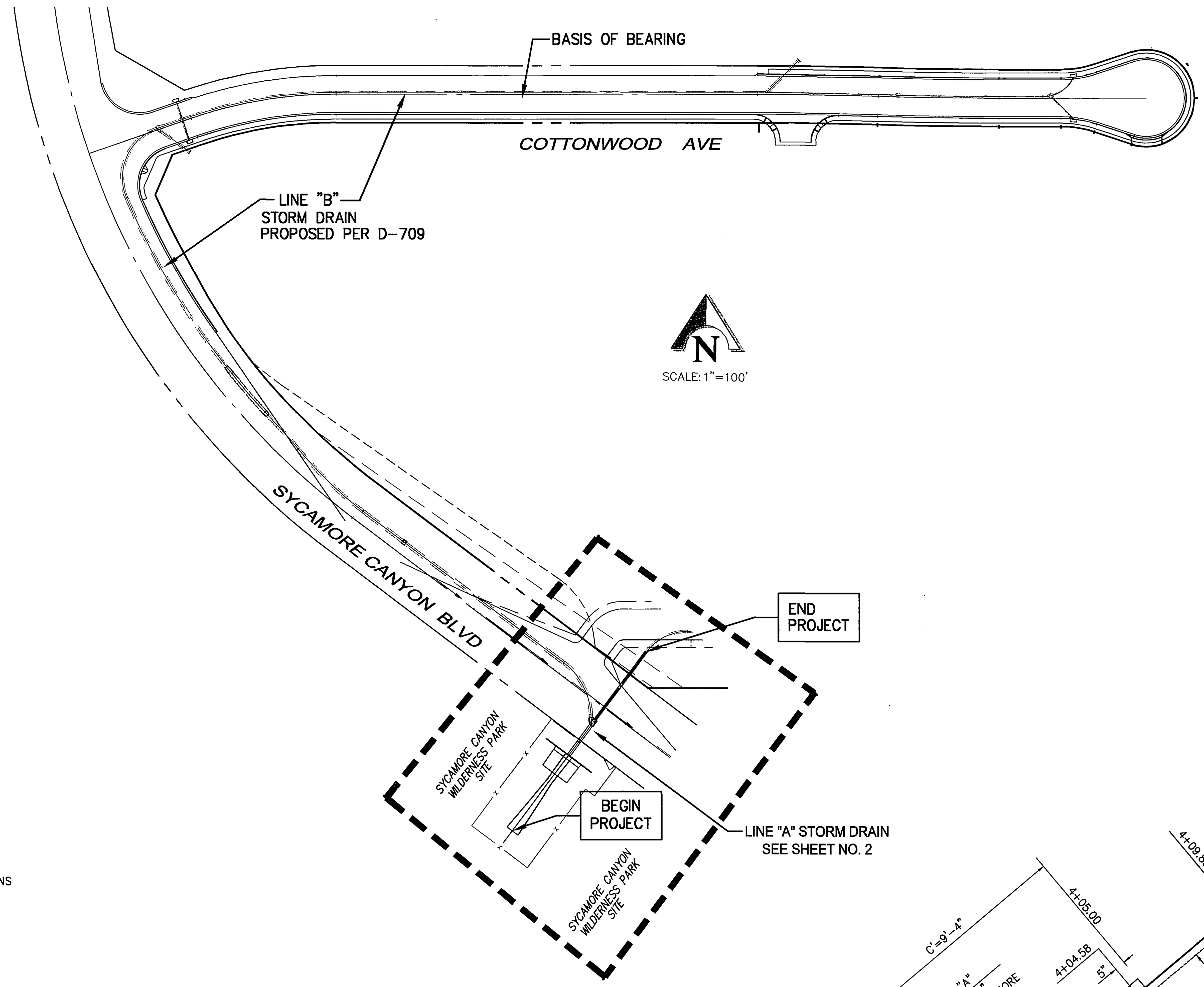


INDEX MAP
SCALE: 1"=100'

## NOTICE TO CONTRACTORS - FEDERAL PROTECTION OF SYCAMORE CANYON WILDERNESS PARK SITE:

***BE ADVISED:*** THE SYCAMORE CANYON WILDERNESS PARK SITE IS A DESIGNATED "CORE RESERVE" FOR THE PRESERVATION OF A FEDERALLY LISTED ENDANGERED SPECIES, THE STEPHEN'S KANGAROO RAT. AS SUCH, UNAUTHORIZED DISTURBANCE OF THIS SITE CARRIES SIGNIFICANT SANCTIONS AND SEVERE PENALTIES. IN ADDITION, UNDER THE TERMS OF THIS CONTRACT, ANY DISTURBANCE OF THE WILDERNESS PARK SITE BEYOND THE DEFINED WORK LIMITS LINE SHALL REQUIRE FULL AND COMPLETE MITIGATION BY THE CONTRACTOR, UP TO AND INCLUDING PAYING THE FULL AND COMPLETE COSTS OF IDENTIFYING, PURCHASING AND TRANSFERRING TO CITY OR OTHER APPROPRIATE PUBLIC OWNERSHIP REPLACEMENT "OCCUPIED" HABITAT AS DEEMED ACCEPTABLE TO THE CITY PARKS DEPARTMENT, STATE FISH AND GAME AND FEDERAL FISH AND WILDLIFE SERVICE, AS MITIGATION FOR SUCH IMPACTS.

TO ENSURE NO SUCH DISTURBANCE SHALL OCCUR, AT ALL TIMES DURING CONSTRUCTION ACTIVITY AT THE SITE CONTRACTOR SHALL PROVIDE A PROFESSIONAL BIOLOGIST TO OBSERVE CONTRACTOR'S OPERATIONS. THE BIOLOGIST SHALL BE EXPERIENCED IN THE IDENTIFICATION OF THIS ENDANGERED SPECIES AND ITS HABITAT AND AS A MINIMUM SHALL BE CERTIFIED BY THE FEDERAL FISH AND WILDLIFE SERVICE FOR OBSERVATION OF THIS SPECIES. THE BIOLOGIST SHALL OBSERVE ALL WORK ACTIVITIES FOR THE DURATION OF THE CONTRACT TO ENSURE THE PROTECTION OF THE ENDANGERED SPECIES.

CONTRACTOR SHALL PROVIDE A TEMPORARY CONSTRUCTION FENCE AT THE WORK LIMITS LINE TO ENSURE NO CONSTRUCTION EQUIPMENT, WORKERS, OR DEBRIS IS ALLOWED IN THE PARK BEYOND THE AUTHORIZED LIMITS OF DISTURBANCE. INSTALLATION OF THIS FENCE SHALL OCCUR PRIOR TO COMMENCEMENT OF ANY OTHER WORK ON THE PARK SITE, AND IS SUBJECT TO THE INSPECTION AND ACCEPTANCE OF THE CITY PARK RANGER, RANDY SOLIS, 909/826-2000. CONTRACTOR SHALL PROVIDE A MINIMUM OF 48 HOUR NOTICE IN ADVANCE OF DESIRED INSPECTIONS. BOTH THE INSTALLATION AND THE REMOVAL OF THIS FENCE SHALL BE PERFORMED FROM THE CONSTRUCTION SIDE OF THE FENCE (THE AUTHORIZED DISTURBANCE AREA), AND NO WORKERS, EQUIPMENT, OR OTHER CONTRACTOR OPERATIONS ARE TO ENTER THE REMAINDER OF THE PARK SITE BEYOND THIS FENCE/WORK LIMIT LINE. ANY SUCH DISTURBANCE BEYOND THE AUTHORIZED WORK LIMIT LINE SHALL RESULT IN MITIGATION REQUIREMENTS AS DETERMINED BY THE CITY UNDER ADVISEMENT FROM THE FEDERAL FISH AND WILDLIFE SERVICE WITH THE FULL AND COMPLETE COSTS OF SUCH MITIGATION TO BORN SOLELY BY THE CONTRACTOR. SUCH FULL AND COMPLETE COSTS SHALL INCLUDE ALL COSTS TO THE CITY FOR STAFF TIME, CONSULTANTS, AGENTS, AND MISCELLANEOUS EXPENSES INVOLVED IN DETERMINING THE EXTENT OF MITIGATION REQUIRED, AND ENSURING THAT ACCEPTABLE MITIGATION IS PROVIDED.

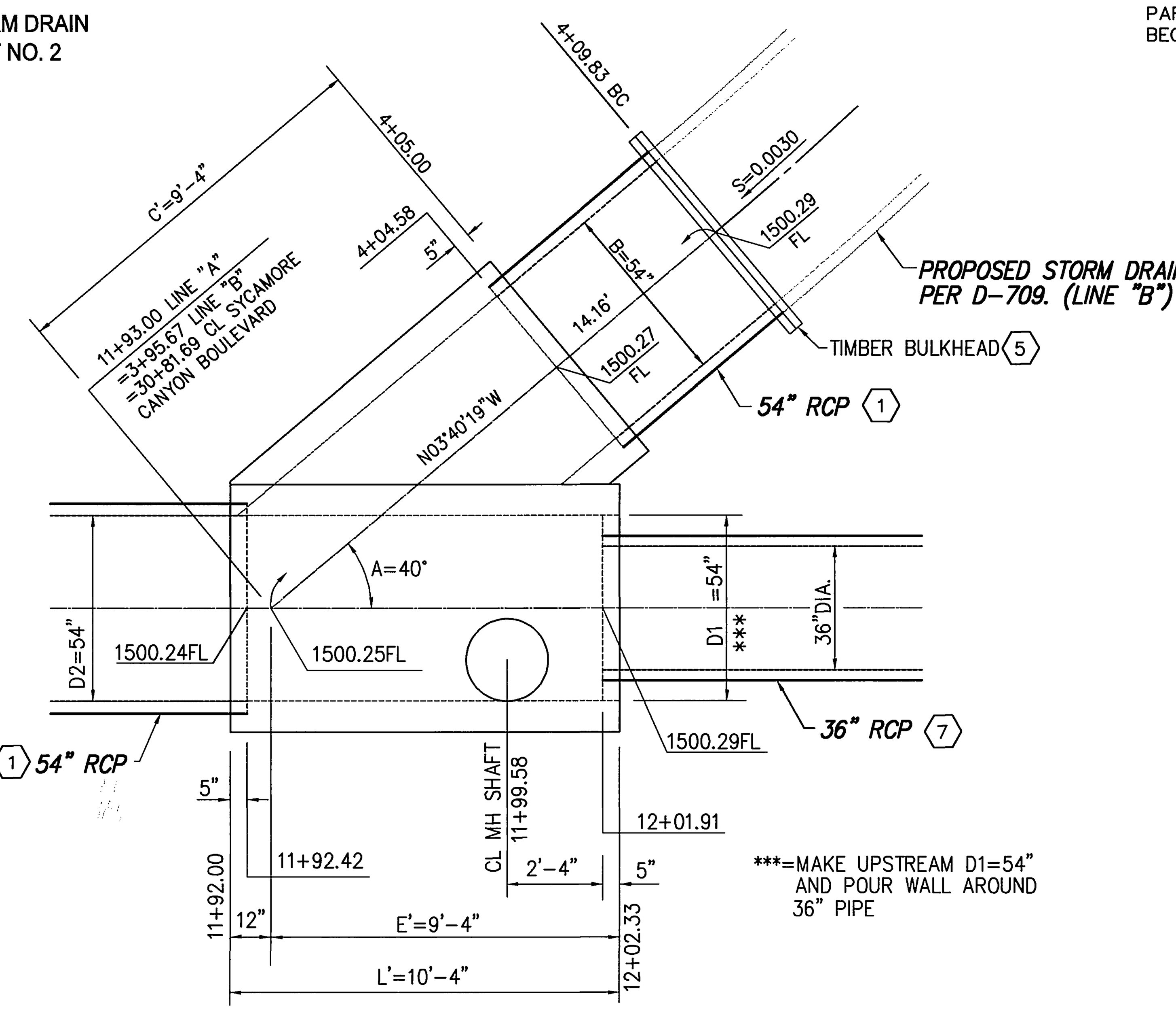


4 DETAIL "A"-MANHOLE JM
CITY OF RIVERSIDE STANDARD DWG. NO. 432
SCALE: 1"=3'

## STANDARD DRAWINGS

### CALTRANS

D90 PIPE CULVERT, HEADWALLS, ENDWALLS AND WINGWALLS, TYPES A,B,AND C

### DEPARTMENT OF PUBLIC WORKS - CITY OF RIVERSIDE

302 DRIVEWAY APPROACH
424 CONCRETE COLLAR
432 MANHOLE JM
452 PIPE BEDDING
456 TIMBER BULKHEAD

### AMERICAN PUBLIC WORKS ASSOCIATION

600-0 CHAIN LINK FENCE AND GATES

## SHEET INDEX


1 TITLE / INDEX SHEET
2 STORM DRAIN PLAN AND PROFILE & SECTION / DETAILS
3 SECTION / DETAILS


## BASIS OF BEARING:

BASIS OF BEARING IS THE NORTH LINE OF THE PARCEL MAP NO. 24536, ON FILE IN BOOK 162, PAGES 91-93, OF PARCEL MAPS, RECORDS OF RIVERSIDE CO., CALIFORNIA BEGINNING N.89° 23' 56" W.

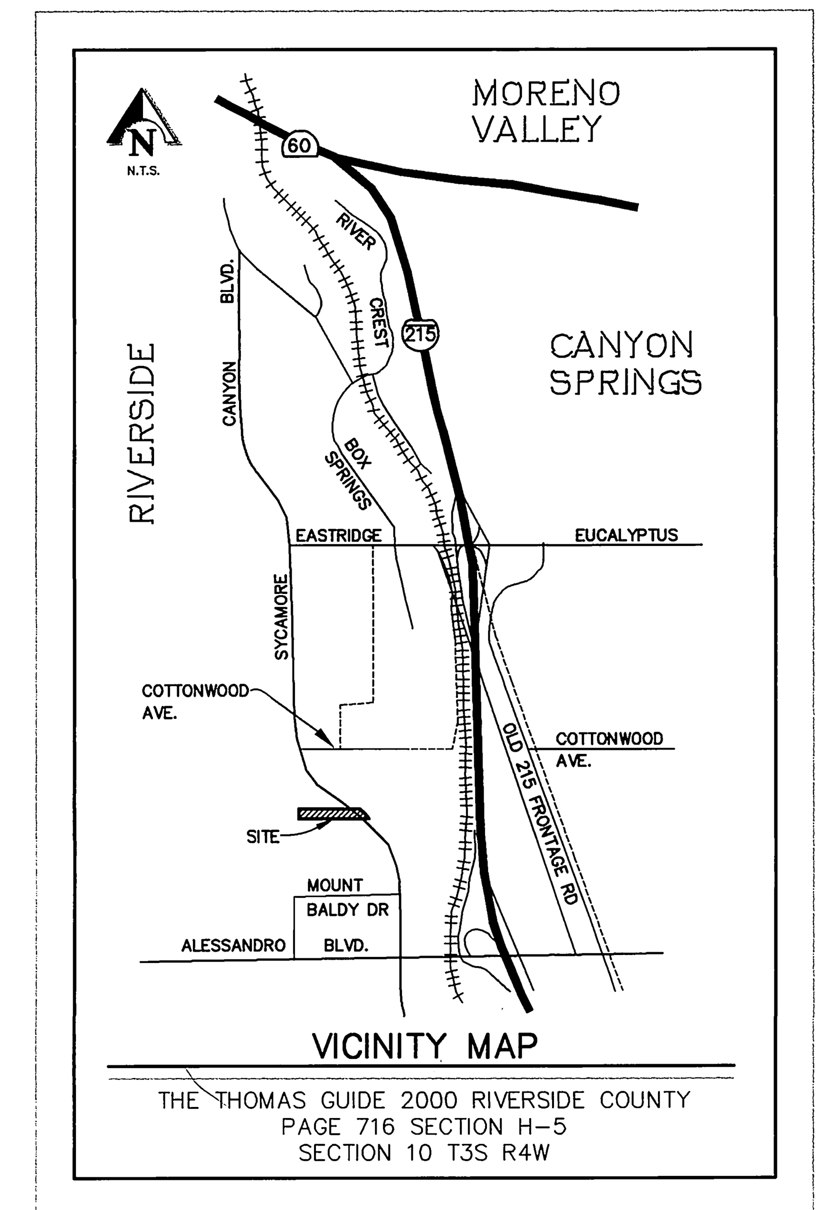


VICINITY MAP
THE THOMAS GUIDE 2000 RIVERSIDE COUNTY
PAGE 716 SECTION H-5
SECTION 10 T3S R4W

WESTERN MUNICIPAL WATER DISTRICT — APPROVED BY [signature] DATE 8/13/02

CITY OF RIVERSIDE- PUBLIC UTILITIES, ELECTRIC — APPROVED BY [signature] DATE 8-14-02

Underground Service Alert
Call: TOLL FREE
1 - 800
227 - 2600
TWO WORKING DAYS BEFORE YOU DIG

PRIVATE ENGINEERING NOTE

CONSTRUCTION CONTRACTOR AGREES THAT IN ACCORDANCE WITH GENERALLY ACCEPTED CONSTRUCTION PRACTICES, CONSTRUCTION CONTRACTOR WILL BE REQUIRED TO ASSUME SOLE AND COMPLETE RESPONSIBILITY FOR JOB SITE CONDITIONS DURING THE COURSE OF CONSTRUCTION OF THE PROJECT, INCLUDING SAFETY OF ALL PERSONS AND PROPERTY; THAT THIS REQUIREMENT SHALL BE MADE TO APPLY CONTINUOUSLY AND NOT BE LIMITED TO NORMAL WORKING HOURS, AND CONSTRUCTION CONTRACTOR FURTHER AGREES TO DEFEND, INDEMNIFY AND HOLD DESIGN PROFESSIONAL HARMLESS FROM ANY AND ALL LIABILITY, REAL OR ALLEGED, IN CONNECTION WITH THE PERFORMANCE OF WORK ON THIS PROJECT, EXCEPTING LIABILITY ARISING FROM THE SOLE NEGLIGENCE OF DESIGN PROFESSIONAL.

SEAL: REGISTERED PROFESSIONAL ENGINEER — TERESITO N. TABIOLO — RCE No. 38826 — Exp. 3-31-05 — CIVIL — STATE OF CALIFORNIA

PREPARED UNDER THE SUPERVISION OF:
[signature]
TERESITO N. TABIOLO
REGISTERED CIVIL ENGINEER NO. 38826
EXPIRATION DATE: 3-31-05 DATE: 8-9-02


KCT CONSULTANTS, INC.
Civil Engineers - Surveyors - Planners
P.O. Box 5705 Riverside, CA 92517-5705
4344 Latham St., Suite 200, Riverside, CA 92501
Phone: 909/341-8940 Fax: 909/341-8945
e-mail: kctinc@kctconsultants.com


CITY BUSINESS TAX CERTIFICATE NO. 069540 EXP.4-7-02

**BENCHMARK: *"L1-A3"*** ***ELEVATION=1534.311***
P.K. NAIL & CITY ENGINEER TAG IN THE BASE OF A STREET LIGHT POLE ALONG THE N'LY CURB OF EASTRIDGE AVE., 82' W'LY OF BOX SPRINGS BLVD. ADJUSTED & ENTERED: MAY 1997

| MARK | REVISIONS | APPR. | DATE |
|---|---|---|---|

DESIGNED BY T.N.T. DRAWN BY L.B. CHECKED BY T.N.T.

*AS-BUILT 6-04-03 LH

CITY OF RIVERSIDE
PUBLIC WORKS DEPARTMENT

| APPROVED BY | DATE | BY |
|---|---|---|
| DEPUTY P.W. DIRECTOR | | |
| PRINCIPAL ENGINEER | | |
| STREET SERVICES | 8/19/02 | [initials] |
| PARK DEPARTMENT | 8/19/02 | [initials] |
| PLANNING DEPT. | | |

APPROVED BY: [signature] PUBLIC WORKS DIRECTOR
DATE: 8/26/02

PC-4383-SD

STORM DRAIN IMPROVEMENT PLAN
SYCAMORE CANYON BUSINESS PARK
STORM DRAIN PLANS
TITLE SHEET

ACCOUNT NO.
D-710
SHEET 1 OF 3

HORIZ. SCALE: AS SHOWN VERT. SCALE: N/A FILE NO.: 1128-10

INDEXED 11-18-02 LH

SD-TITLE [H:\1128\10-Sycamore\Engr\Off-Strm-Drn\LINE A REV\Line-A-SD-TITLE.dwg]
SITE [H:\1128\10-Sycamore\Engr\Off-Strm-Drn\10-sdrevsite.dwg]
SD-NOTES [H:\1128\10-Sycamore\Engr\Off-Strm-Drn\LINE A REV\Line-A-SD-NOTES.dwg]
VIC-MAP [H:\1128\10-Sycamore\Engr\Off-Strm-Drn\Line A storm drain\Line-A-VIC-MAP.dwg]
H:\1128\10-Sycamore\Engr\Off-Strm-Drn\LINE A REV\10-Line-A-sdti-01.dwg
Plot Date: August 09, 2002 - 11:48am | terry

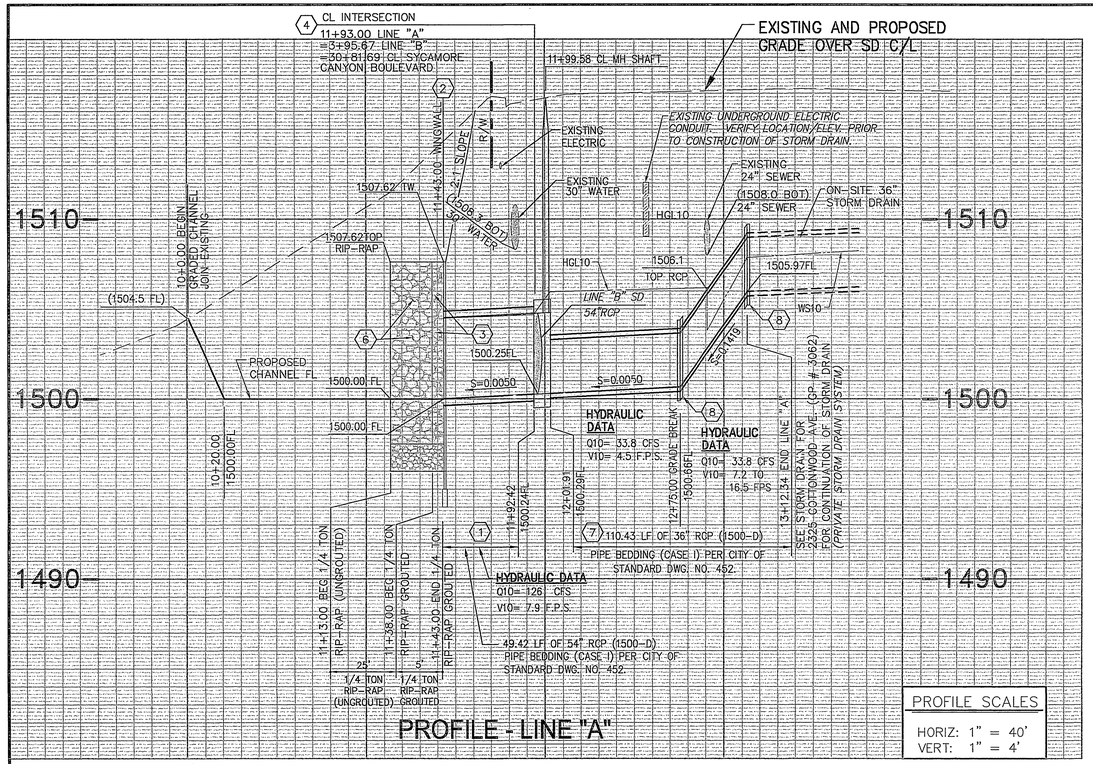


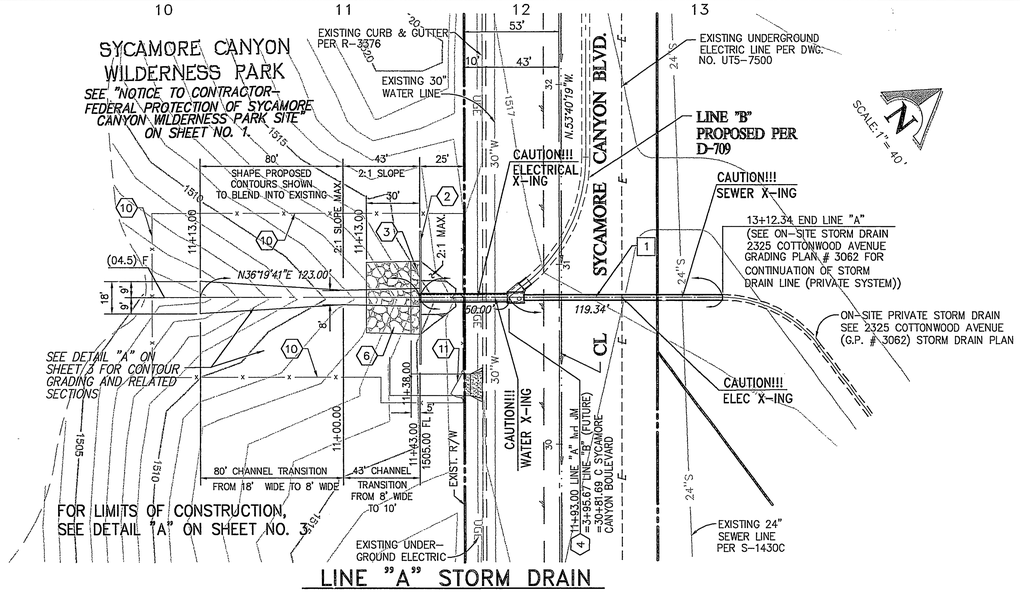


LINE "A" STORM DRAIN

| LINE DATA: | | |
|---|---|---|
| LINE | BEARING | DISTANCE |
| 1 | N36°19'41"E | 169.34' |

## STORM DRAIN CONSTRUCTION NOTES

1. INSTALL 54" R.C.P.(1500-D) PIPE BEDDING (CASE I) PER CITY OF RIVERSIDE STD. DWG. NO. 452.
2. CONSTRUCT TYPE "B" STRAIGHT WINGWALL PER CALTRANS STD. D90. (STANDARD PER DETAIL "B" ON SHEET 2). MODIFY AS SHOWN ON SECTION "F"-"F" ON SHEET 3.
3. CONSTRUCT 1/4 TON GROUTED RIP-RAP, WITH 18" THICK NO. 1 BACKING MATERIAL PER CALTRANS SPECIFICATIONS. (METHOD "A" PLACEMENT) (THICKNESS SHOWN ON PLAN)
4. CONSTRUCT MANHOLE JM PER CITY OF RIVERSIDE STANDARD DWG. NO. 432. (SEE DETAIL "A" ON SHEET 1.
5. CONSTRUCT TIMBER BULKHEAD PER CITY OF RIVERSIDE STD. DWG. 456.
6. CONSTRUCT 1/4 TON UNGROUTED RIP-RAP (THICKNESS SHOWN ON PLAN) WITH 18" THICK NO. 1 BACKING MATERIAL PER CALTRANS SPECIFICATIONS. (METHOD "A" PLACEMENT)
7. INSTALL 36" RCP (1500-D). PIPE BEDDING (CASE I) PER CITY OF RIVERSIDE STD. DWG. NO. 452.
8. INSTALL CONCRETE COLLAR PER CITY OF RIVERSIDE STD. DWG. NO. 424.
9. CONSTRUCT 12' DRIVEWAY APPROACH PER CITY OF RIVERSIDE STD. DWG. NO. 302.
10. INSTALL TEMPORARY CHAIN LINK FENCE (H=6'). SEE "NOTICE TO CONTRACTOR-FEDERAL PROTECTION OF SYCAMORE CANYON WILDERNESS PARK SITE" ON SHEET 1.
11. INSTALL TEMPORARY CHAIN LINK GATE (W=14'). SEE "NOTICE TO CONTRACTOR-FEDERAL PROTECTION OF SYCAMORE CANYON WILDERNESS PARK SITE" ON SHEET 1.

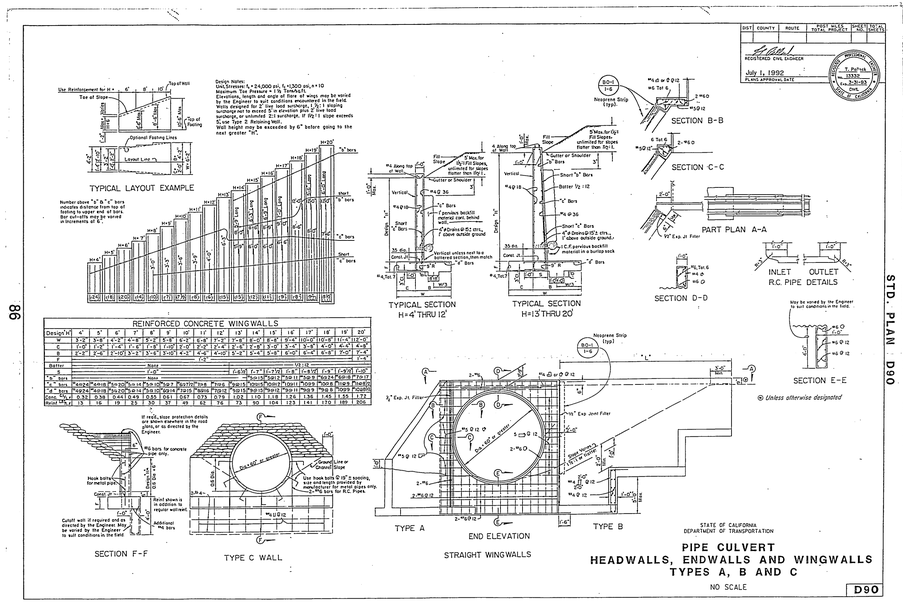


# DETAIL "B"

PIPE CULVERTS
HEADWALLS, ENDWALLS AND WINGWALLS
TYPES A, B, AND C
(CALTRANS STD. DWG. D90)

| WESTERN MUNICIPAL WATER DISTRICT | CITY OF RIVERSIDE– PUBLIC UTILITIES, ELECTRIC |
|---|---|
| APPROVED BY _____ DATE 8/13/02 | APPROVED BY _____ DATE 8-19-02 |

**PRIVATE ENGINEERING NOTE**

CONSTRUCTION CONTRACTOR AGREES THAT IN ACCORDANCE WITH GENERALLY ACCEPTED CONSTRUCTION PRACTICES, CONSTRUCTION CONTRACTOR WILL BE REQUIRED TO ASSUME SOLE AND COMPLETE RESPONSIBILITY FOR JOB SITE CONDITIONS DURING THE COURSE OF CONSTRUCTION OF THE PROJECT, INCLUDING SAFETY OF ALL PERSONS AND PROPERTY; THAT THIS REQUIREMENT SHALL BE MADE TO APPLY CONTINUOUSLY AND NOT BE LIMITED TO NORMAL WORKING HOURS, AND CONSTRUCTION CONTRACTOR FURTHER AGREES TO DEFEND, INDEMNIFY AND HOLD DESIGN PROFESSIONAL HARMLESS FROM ANY AND ALL LIABILITY, REAL OR ALLEGED, IN CONNECTION WITH THE PERFORMANCE OF WORK ON THIS PROJECT, EXCEPTING LIABILITY ARISING FROM THE SOLE NEGLIGENCE OF DESIGN PROFESSIONAL.

Underground Service Alert
Call: TOLL FREE
1 – 800
227 – 2600
TWO WORKING DAYS BEFORE YOU DIG

SEAL

PREPARED UNDER THE SUPERVISION OF:
TERESITO N. TABIOLO
REGISTERED CIVIL ENGINEER NO. 38826
EXPIRATION DATE: 3-31-05 DATE: 8-9-02

KCT CONSULTANTS, INC.
Civil Engineers - Surveyors - Planners
P.O. Box 5705 Riverside, CA 92517-5705
4344 Latham St., Suite 200, Riverside, CA 92501
Phone: 909/341-6940 Fax: 909/341-6945
e-mail: kctinc@kctconsultants.com
CITY BUSINESS TAX CERTIFICATE NO. 069540 EXP. 4-7-02

BENCHMARK: "L1-A3" ELEVATION=1534.311
P.K. NAIL & CITY ENGINEER TAG IN THE BASE OF A STREET LIGHT POLE ALONG THE N'LY CURB OF EASTRIDGE AVE., 82' W'LY OF BOX SPRINGS BLVD. ADJUSTED & ENTERED: MAY 1997

| MARK | REVISIONS | APPR. | DATE |
|---|---|---|---|
| | | | |

DESIGNED BY T.N.T. DRAWN BY L.B. CHECKED BY T.N.T.

CITY OF RIVERSIDE
PUBLIC WORKS DEPARTMENT

| | APPROVED BY | DATE | BY |
|---|---|---|---|
| | DEPUTY P.W. DIRECTOR | | |
| | PRINCIPAL ENGINEER | | |
| | STREET SERVICES | 8/19/02 | JW |
| | PARK DEPARTMENT | 8/19/02 | RS |
| | PLANNING DEPT. | | |

APPROVED BY: _____ PUBLIC WORKS DIRECTOR
DATE: 8/26/02

STORM DRAIN IMPROVEMENT PLAN
SYCAMORE CANYON BUSINESS PARK STORM DRAIN PLANS
STORM DRAIN PLAN & PROFILE

ACCOUNT NO. D-710
SHEET 2 OF 3 SHEETS

HORIZ. SCALE: 1"=40' VERT. SCALE: 1"=4' FILE NO.: 1128-10

* AS-BUILT 6-04-03 GH

INDEXED 11-18-02 GH

PC-4383-SD

H:\1128\Vol-3\pcsmore\Wrap\Plt-Strm-Dn\Vol-4\revlds-A.dwg]
DATE: [H:\1128\Vol-3\pcsmore\Wrap\Plt-Strm-Dn\Vol-4\revlds-A.dwg]
ST-DRL: [H:\1128\Vol-3\pcsmore\Wrap\Plt-Strm-Dn\Vol-4\revlds-A.dwg]
DRAWING: [H:\1128\Vol-3\pcsmore\Wrap\Plt-Strm-Dn\LINE A REV\Vol-Line-A-SD-HOTES.dwg]
DRAWING: [H:\1128\Vol-3\pcsmore\Wrap\Plt-Strm-Dn\LINE A REV\Vol-Line-A-SD-PROF.dwg]
H:\1128\Vol-3\pcsmore\Wrap\Plt-Strm-Dn\Vol-Line-A REV\Vol-Line-A-sd-01.dwg
August 09, 2002 - 11:40am by jerry

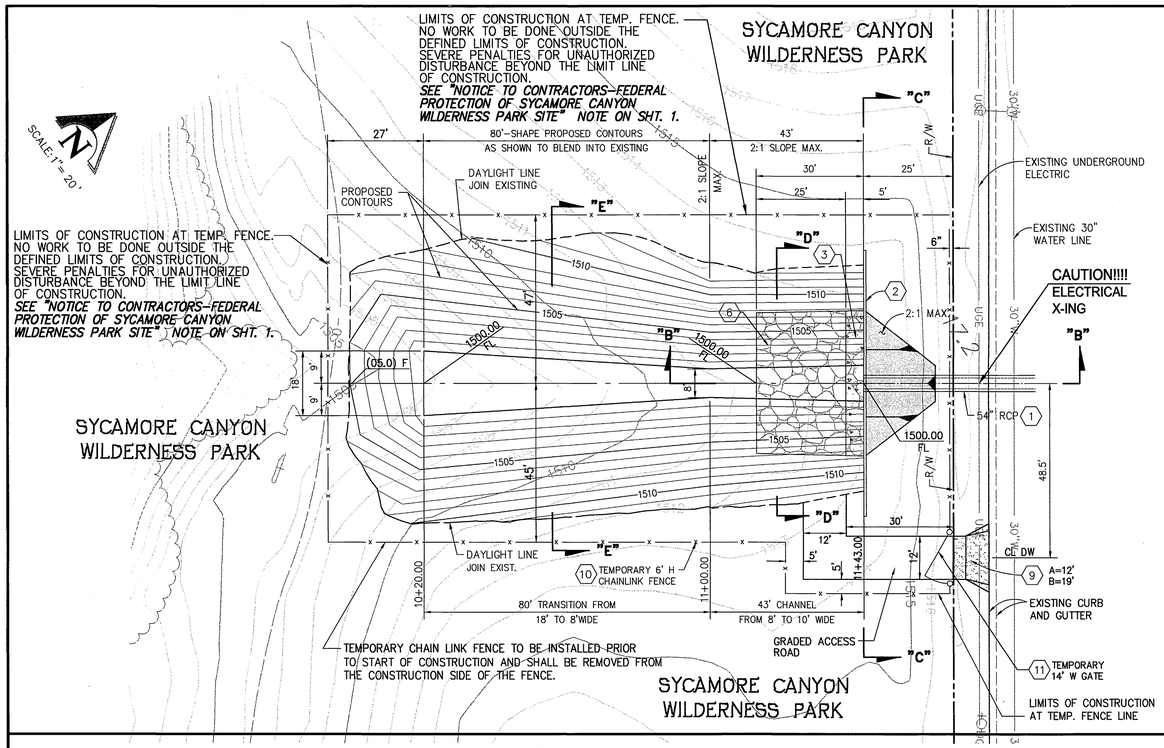


## DETAIL "A"

SCALE: 1"=20'

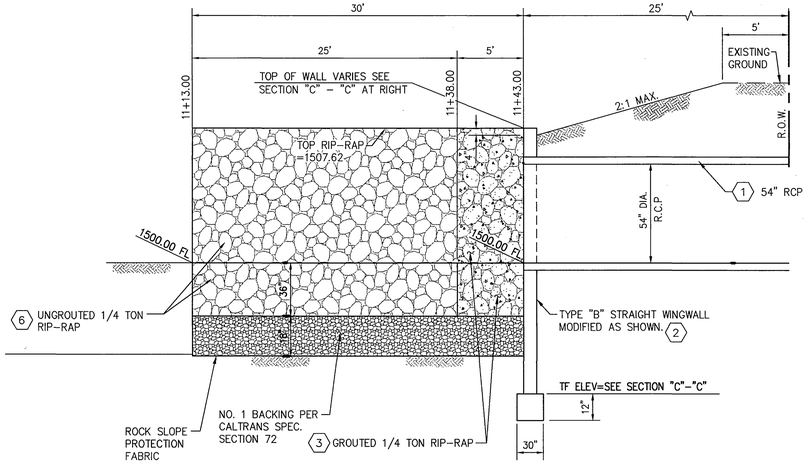


## SECTION "B" - "B"

N.T.S.

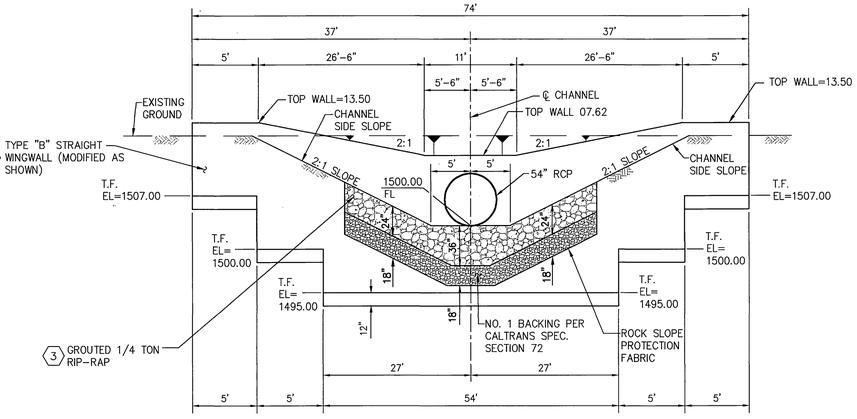


## SECTION "C" - "C"

N.T.S.

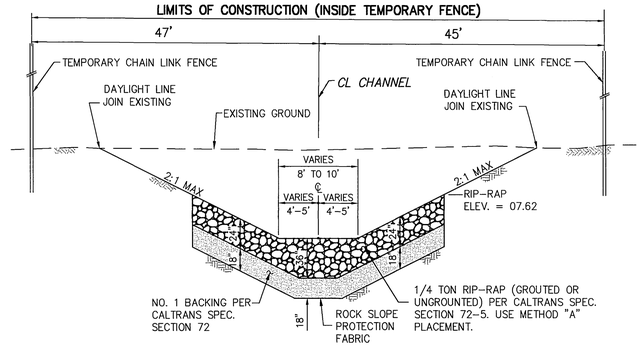


## SECTION "D" - "D"

N.T.S.

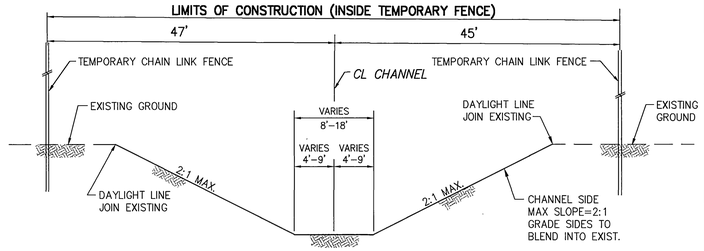


## SECTION "E" - "E"

N.T.S.

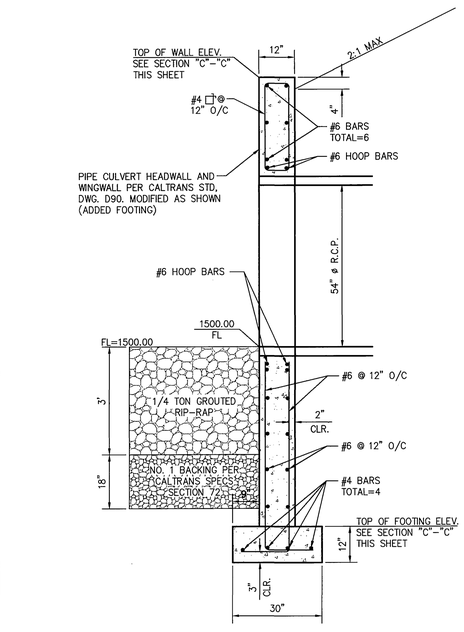


## SECTION "F" - "F"

SCALE: 1"=2'

### STORM DRAIN CONSTRUCTION NOTES

1. INSTALL 54" R.C.P.(1500–D) PIPE BEDDING (CASE I) PER CITY OF RIVERSIDE STD. DWG. NO. 452.
2. CONSTRUCT TYPE "B" STRAIGHT WINGWALL PER CALTRANS STD. D90. (STANDARD PER DETAIL "B" ON SHEET 2). MODIFY AS SHOWN ON SECTION "F"–"F" ON SHEET 3.
3. CONSTRUCT 1/4 TON GROUTED RIP–RAP, WITH 18" THICK NO. 1 BACKING MATERIAL PER CALTRANS SPECIFICATIONS. (METHOD "A" PLACEMENT) (THICKNESS SHOWN ON PLAN)
6. CONSTRUCT 1/4 TON UNGROUTED RIP–RAP (THICKNESS SHOWN ON PLAN) WITH 18" THICK NO. 1 BACKING MATERIAL PER CALTRANS SPECIFICATIONS. (METHOD "A" PLACEMENT)
9. CONSTRUCT 12' DRIVEWAY APPROACH PER CITY OF RIVERSIDE STD. DWG. NO. 302.
10. INSTALL TEMPORARY CHAIN LINK FENCE (H=6'). SEE "NOTICE TO CONTRACTOR–FEDERAL PROTECTION OF SYCAMORE CANYON WILDERNESS PARK SITE" ON SHEET 1.
11. INSTALL TEMPORARY CHAIN LINK GATE (W=14'). SEE "NOTICE TO CONTRACTOR–FEDERAL PROTECTION OF SYCAMORE CANYON WILDERNESS PARK SITE" ON SHEET 1.

WESTERN MUNICIPAL WATER DISTRICT
APPROVED BY — DATE 8/13/02

CITY OF RIVERSIDE– PUBLIC UTILITIES, ELECTRIC
APPROVED BY — DATE 8-15-02

Underground Service Alert
Call: TOLL FREE 1 – 800 227 – 2600
TWO WORKING DAYS BEFORE YOU DIG

PRIVATE ENGINEERING NOTE
CONSTRUCTION CONTRACTOR AGREES THAT IN ACCORDANCE WITH GENERALLY ACCEPTED CONSTRUCTION PRACTICES, CONSTRUCTION CONTRACTOR WILL BE REQUIRED TO ASSUME SOLE AND COMPLETE RESPONSIBILITY FOR JOB SITE CONDITIONS DURING THE COURSE OF CONSTRUCTION OF THE PROJECT, INCLUDING SAFETY OF ALL PERSONS AND PROPERTY; THAT THIS REQUIREMENT SHALL BE MADE TO APPLY CONTINUOUSLY AND NOT BE LIMITED TO NORMAL WORKING HOURS, AND CONSTRUCTION CONTRACTOR FURTHER AGREES TO DEFEND, INDEMNIFY AND HOLD DESIGN PROFESSIONAL HARMLESS FROM ANY AND ALL LIABILITY, REAL OR ALLEGED, IN CONNECTION WITH THE PERFORMANCE OF WORK ON THIS PROJECT, EXCEPTING LIABILITY ARISING FROM THE SOLE NEGLIGENCE OF DESIGN PROFESSIONAL.

SEAL — REGISTERED PROFESSIONAL ENGINEER — TERESITO N. TABIOLO RCE No. 38826 Exp. 3-31-05 — CIVIL — STATE OF CALIFORNIA

PREPARED UNDER THE SUPERVISION OF:
TERESITO N. TABIOLO
REGISTERED CIVIL ENGINEER NO. 38826
EXPIRATION DATE: 3-31-05 DATE: 8-9-02

KCT CONSULTANTS, INC.
Civil Engineers – Surveyors – Planners
P.O. Box 5705 Riverside, CA 92517-5705
4344 Latham St., Suite 203, Riverside, CA 92501
Phone: 909/341-8940 Fax: 909/341-8945
e-mail: kctinc@jkctconsultants.com
CITY BUSINESS TAX CERTIFICATE NO. 069540 EXP. 4-7-02

BENCHMARK: "LI–43" ELEVATION=1534.311
P.K. NAIL & CITY ENGINEER TAG IN THE BASE OF A STREET LIGHT POLE ALONG THE N'LY CURB OF EASTRIDGE AVE., 82' W'LY OF BOX SPRINGS BLVD. ADJUSTED & ENTERED: MAY 1997

| MARK | REVISIONS | APPR. | DATE |
|---|---|---|---|

DESIGNED BY T.N.T. DRAWN BY L.B. CHECKED BY T.N.T.

CITY OF RIVERSIDE
PUBLIC WORKS DEPARTMENT

| | APPROVED BY | DATE | BY |
|---|---|---|---|
| DEPUTY P.W. DIRECTOR | | | |
| PRINCIPAL ENGINEER | | | |
| STREET SERVICES | 9/10/02 | JW | |
| PARK DEPARTMENT | 9/9/02 | RD | |
| PLANNING DEPT. | | | |

APPROVED BY: Jim Bozl, PUBLIC WORKS DIRECTOR
DATE: 8/16/02

STORM DRAIN IMPROVEMENT PLAN
SYCAMORE CANYON BUSINESS PARK STORM DRAIN PLANS SECTIONS/DETAILS

ACCOUNT NO. D-710
SHEET 3 OF 3
HORIZ. SCALE: AS SHOWN VERT. SCALE: N/A
FILE NO.: 1128-10

* AS-BUILT 6-04-03 GH

PC–4383–SD

INDEXED 11-18-02 GH

SITE: [N:\1128\10-Sycamore\Dgn\SPI-Sht=3in=20in\10-xrefs4x4in]
XCOM: [N:\1128\10-Sycamore\Mgr\comb-topo.dwg]
PLOT: [N:\1128\10-Sycamore\Mgr\SPI-Sht=3in=20in\Sht 4 REV\Line-A-SD-TITLE.dwg]
SCALE: [N:\1128\10-Sycamore\Mgr\SPI-Sht=3in=20in\Sht 4 REV\Line-A-SD-DETAILS.dwg]
H:\1128\10-Sycamore\Dgn\SPI-Sht=3in=20in\Sht 4 REV\10-Line-A-sh-01.dwg
Plot Date: August 05, 2002 – 11:47am | larry