STORM DRAIN IMPROVEMENT PLAN
TRACT NO. 30922-3
STORM DRAIN LINES "A", "B" AND "C"

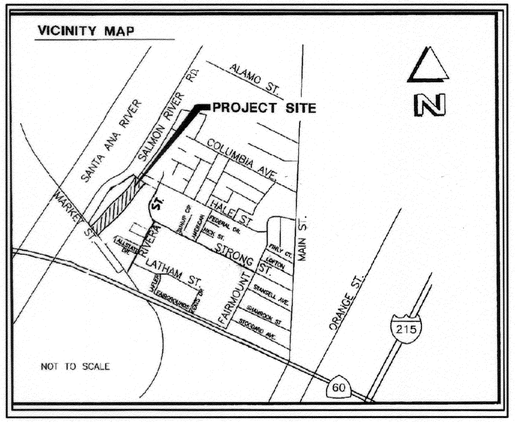

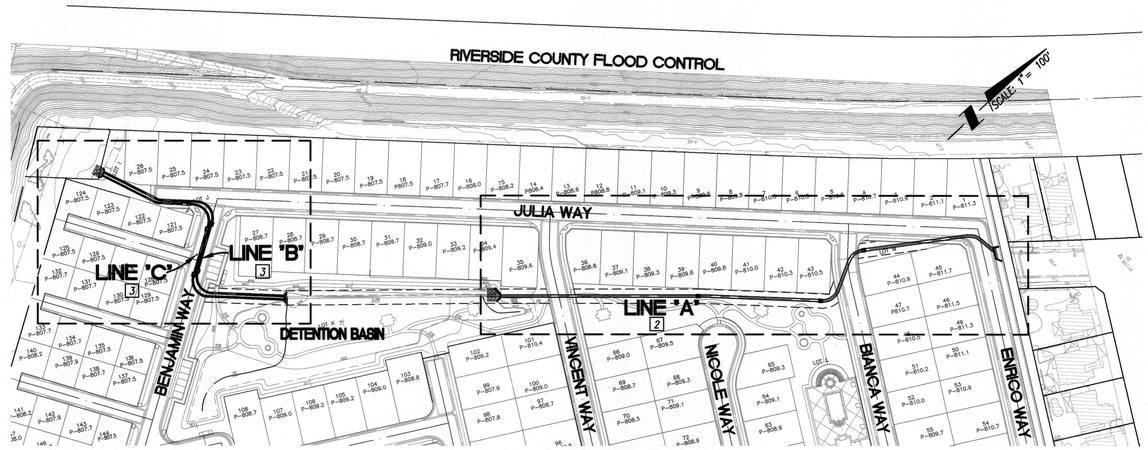

INDEX MAP
SCALE: 1"=100'

[#] STORM DRAIN SHEET NO.

GENERAL NOTES

1. NO PERSON SHALL PERFORM ANY CONSTRUCTION ACTIVITY OR INSTALL ANY OBJECTS WITHIN THE PUBLIC RIGHT-OF-WAY OR EASEMENTS OF THE CITY OF RIVERSIDE WITHOUT A VALID CONSTRUCTION PERMIT, OR A STREET OPENING PERMIT OR AN ENCROACHMENT PERMIT ISSUED BY THE CITY'S PUBLIC WORKS DEPARTMENT.
2. IT SHALL BE THE RESPONSIBILITY OF THE CONTRACTOR TO CLEAR THE RIGHT-OF-WAY IN ACCORDANCE WITH THE PROVISIONS OF LAW AS IT AFFECTS EACH UTILITY INCLUDING IRRIGATION LINES AND APPURTENANCES AND AT NO COST TO THE CITY.
3. CONSTRUCTION SHALL BE IN ACCORDANCE WITH THE CITY OF RIVERSIDE DEPARTMENT OF PUBLIC WORKS STANDARD DRAWINGS AND ITS SUPPLEMENTAL NOTES AND THE STANDARD SPECIFICATIONS FOR PUBLIC WORKS CONSTRUCTION, CURRENT EDITION.
4. THE PRIVATE ENGINEER SIGNING THESE PLANS IS RESPONSIBLE FOR ASSURING THE ACCURACY AND ACCEPTABILITY OF THE WORK HEREON. IN THE EVENT OF DISCREPANCIES ARISING DURING CONSTRUCTION, THE PRIVATE ENGINEER SHALL BE RESPONSIBLE FOR DETERMINING AN ACCEPTABLE SOLUTION AND REVISING THE PLANS FOR APPROVAL BY THE CITY.
5. THE DEVELOPER SHALL BE RESPONSIBLE FOR PRESERVING OR REESTABLISHING AND REFERENCING SURVEY MONUMENTS DESTROYED, DISTURBED OR BURIED AS A RESULT OF CONSTRUCTION HEREON.
6. ALL FLAGGED ELEVATIONS SHALL BE STAKED IN THE FIELD BY THE PRIVATE ENGINEER.
7. THE CONTRACTOR SHALL CALL IN A LOCATION REQUEST TO UNDERGROUND SERVICE ALERT (USA), PHONE # 1-800-227-2600, TWO WORKING DAYS BEFORE DIGGING; NO CONSTRUCTION PERMIT WILL BE ISSUED BY THE PUBLIC WORKS DEPARTMENT INVOLVING EXCAVATION FOR UNDERGROUND FACILITIES UNLESS THE APPLICANT HAS BEEN PROVIDED AN INQUIRY IDENTIFICATION NUMBER BY U.S.A.
8. DEVELOPER/CONTRACTOR TO GIVE CITY WATER DIVISION FIVE (5) WORKING DAYS WRITTEN NOTICE PRIOR TO START OF CONSTRUCTION AND TO ALLOW CITY TEN (10) WORKING DAYS FOR COMPLETION OF WORK. (909) 351-6150.
9. QUANTITIES SHOWN ARE FOR INFORMATION ONLY AND THE CITY OF RIVERSIDE IS NOT RESPONSIBLE FOR THEIR ACCURACY.
10. BEFORE THE RIP-RAP AT THE OUTLET OF ANY DRAINAGE STRUCTURE IS ACCEPTED BY THE CITY, IT SHALL BE TESTED UNDER FLOWS AS CLOSE AS POSSIBLE TO DESIGN CONDITIONS WITH WATER OBTAINED FROM FIRE HYDRANTS IN THE IMMEDIATE AREA.

CONSTRUCTION NOTES

		QUANTITY	
1	CONSTRUCT 24" RCP (D-LOAD PER PLAN) BEDDING PER C.O.R. STD 452	771	L.F.
	(CASE I) WITH CONCRETE BACKFILL PER PROFILE & DETAIL ON SHEET 4	392	L.F.
2	CONSTRUCT 42" RCP (D-LOAD PER PLAN) BEDDING PER C.O.R. STD 452	728	L.F.
	(CASE I) WITH CONCRETE BACKFILL PER PROFILE & DETAIL ON SHEET 4	187	L.F.
3	CONSTRUCT MANHOLE "EZ" PER C.O.R. STD. 431	4	EA.
4	CONSTRUCT MANHOLE "AX" PER C.O.R. STD. 430	3	EA.
5	CONSTRUCT HEADWALL AND WINGWALLS PER CAL TRANS STD. D89 AND D90 DETAILS ON SHEET 4 AND DETAIL ON PLAN	4	EA.
6	CONSTRUCT TRASHRACK PER APWA STD 361 (CASE A)	2	EA.
7	CONSTRUCT PROTECTION BARRIER PER APWA STD 360	2	EA.
8	CONSTRUCT CATCH BASIN PER C.O.R. STD 405	1	EA.
9	CONSTRUCT 6" THICK PCC SLAB W/ #4 BARS 18" O.C. EACH WAY	527	S.F.
10	CONSTRUCT LIGHT WEIGHT RIP RAP PER DETAIL ON SHEET NO. 4	450	S.F.
11	CONSTRUCT 30" WIDE X25 L.F. TRENCH DRAIN AT END OF ROAD AS SHOWN ON SHEET 5	25	L.F.
12	CONSTRUCT 16"X16" DROPINLET SHOWN ON SHEET 5	1	EA.
13	INSTALL 8" HDPE PIPE FROM TRENCHDRAIN TO DROPINLET TO EXISTING SUMP	48	L.F.
14	CORE DRILL 8" HDPE PIPE INTO EXISTING SUMP PUMP PIT	1	EA.
15	INSTALL 4" SCH 80 PVC PIPE FROM EXISTING SUMP TO OUTLET AT CROWN OF 42" PIPE	40	L.F.
16	RE-GRADE AS NECESSARY TO FLOW TO DROPINLET	0-400 MAX.	S.F.
17	MAKE CONNECTIONS TO EXISTING CONTROL BOX	1	EA.
18	ENERGIZE EXISTING METER BOX	1	EA.

1 NUISANCE WATER ABATEMENT SYSTEM

BENCHMARK

CITY OF RIVERSIDE BENCHMARK GPS-51: 2-½" BRASS DISK STAMPED "CITY OF RIVERSIDE GPS STATION 51 1991 CADME" SET IN THE TOP OF A CATCH BASIN ALONG THE NORTHERLY CURB OF COLUMBIA AVENUE, 4 FEET EAST OF THE BCR OF THE NORTHEAST OF MAIN STREET AT COLUMBIA AVE.

ELEV.: 813.66

PW04-0857

Underground Service Alert
Call: TOLL FREE
1-800-227-2600
DIAL BEFORE YOU DIG
TWO WORKING DAYS BEFORE YOU DIG
A PUBLIC SERVICE BY UNDERGROUND SERVICE ALERT

Prepared Under The Supervision Of:
Scott M. Wilson
Date: 1/4/05
SCOTT M. WILSON
REGISTERED CIVIL ENGINEER NO. 49884
REGISTRATION EXPIRES: 09/30/06

CITY OF RIVERSIDE BENCHMARK GPS-51: 2-½" BRASS DISK STAMPED "CITY OF RIVERSIDE GPS STATION 51 1991 CADME" SET IN THE TOP OF A CATCH BASIN ALONG THE NORTHERLY CURB OF COLUMBIA AVENUE, 4 FEET EAST OF THE BCR OF THE NORTHEAST OF MAIN STREET AT COLUMBIA AVE. ELEV: 813.66

REGISTERED PROFESSIONAL ENGINEER SCOTT M. WILSON No. 49884 Exp. 09/30/06 CIVIL STATE OF CALIFORNIA

WILSON MIKAMI CORPORATION
3 PETERS CANYON, SUITE 110 T: 949-679-0090
IRVINE, CA 92606 F: 949-679-0091

Scale: SEE PLAN
Date: 12-27-04

RIVERA VILLAS

Bench Mark: GPS-51 SEE THIS SHEET

REVISIONS:

REMARK	DESCRIPTION:	APR.:	DATE:
1	UPDATE CONSTRUCTION NOTES		05/13/16
2	CHANGE OVERALL SHEET NUMBER		05/13/16

DESIGNED: MKW DRAWN: MKW CHECKED: SMW

CITY OF RIVERSIDE ELECTRICAL DEPARTMENT APPROVED BY 1/19/05
CITY OF RIVERSIDE WATER DEPARTMENT APPROVED BY 1/7/05

CITY OF RIVERSIDE, CALIFORNIA
PUBLIC WORKS DEPARTMENT

Approved By:	BY:	Date:
PRINCIPAL ENG.		1/25/05
PARK DEPARTMENT		
TRAFFIC DIVISION		
STREET SERVICES		1/11/05

APPROVED BY CITY ENGINEER DATE 1/27/05

TRACT 30922-3
STORM DRAIN IMPROVEMENT PLANS
TITLE SHEET

D-744
Sheet 1 OF 26 SHEETS
FILE NO. 03-026

File name: S:\10012.10\dwg\prsd0001.dwg

INDEXED 2-8-05

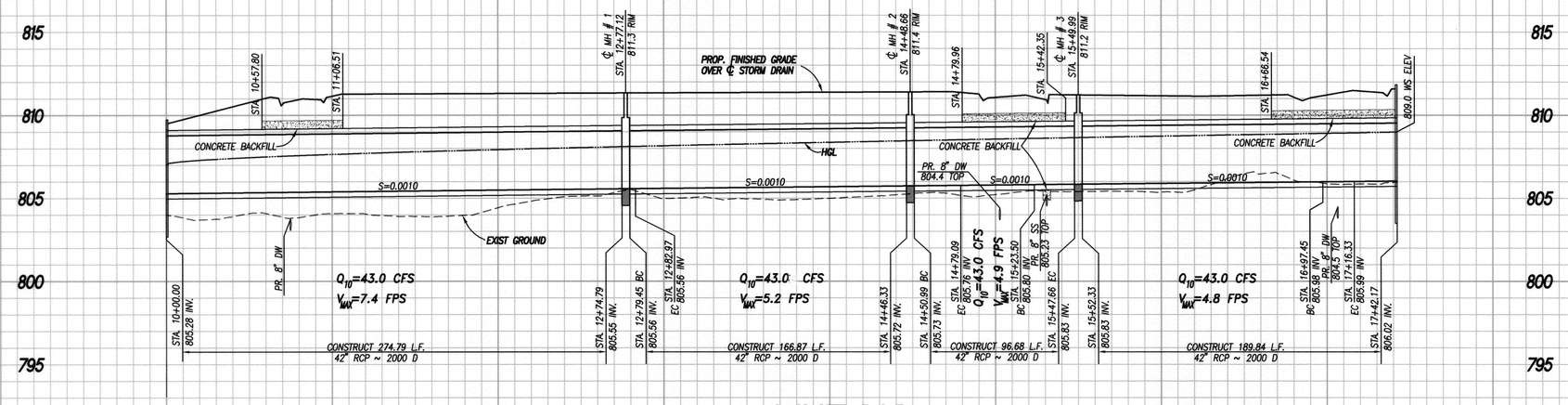

LINE "A"

PROFILE
HORIZ. 1" = 40'
VERT. 1" = 4'

CONSTRUCTION NOTES

1. CONTRACTOR SHALL POTHOLE AND VERIFY THE EXISTING ELEVATION OF UTILITIES PRIOR TO CONSTRUCTION. CONTRACTOR SHALL NOTIFY THE ENGINEER OF ANY DISCREPANCY PRIOR TO CONSTRUCTION.

(2) CONSTRUCT 42" RCP (D-LOAD PER PLAN) BEDDING PER C.O.R. STD 452 (CASE I) WITH CONCRETE BACKFILL PER PROFILE & DETAIL ON SHEET 4
(4) CONSTRUCT MANHOLE "AX" PER C.O.R. STD. 430
(5) CONSTRUCT HEADWALL AND WINGWALLS PER CAL TRANS STD. D89 AND D90 ON SHEET 4 AND DETAIL HEREON
(6) CONSTRUCT TRASHRACK PER APWA STD 361 (CASE A)
(7) CONSTRUCT PROTECTION BARRIER PER APWA STD 360
(9) CONSTRUCT 6" THICK PCC SLAB W/ #4 BARS 18" O.C. EACH WAY W/HEAVY BROOM FINISH (NON-SKID FOR TRAIL)
(10) CONSTRUCT LIGHT WEIGHT RIP RAP PER DETAIL ON SHEET 4

CURVE TABLE				
CURVE	LENGTH	RADIUS	DELTA	TANGENT
C1	3.51'	90.00'	2°14'00"	1.75'
C2	28.10'	22.50'	71°33'55"	16.22'
C3	24.16'	22.50'	61°32'00"	13.39'
C4	18.87'	22.50'	48°03'53"	10.03'

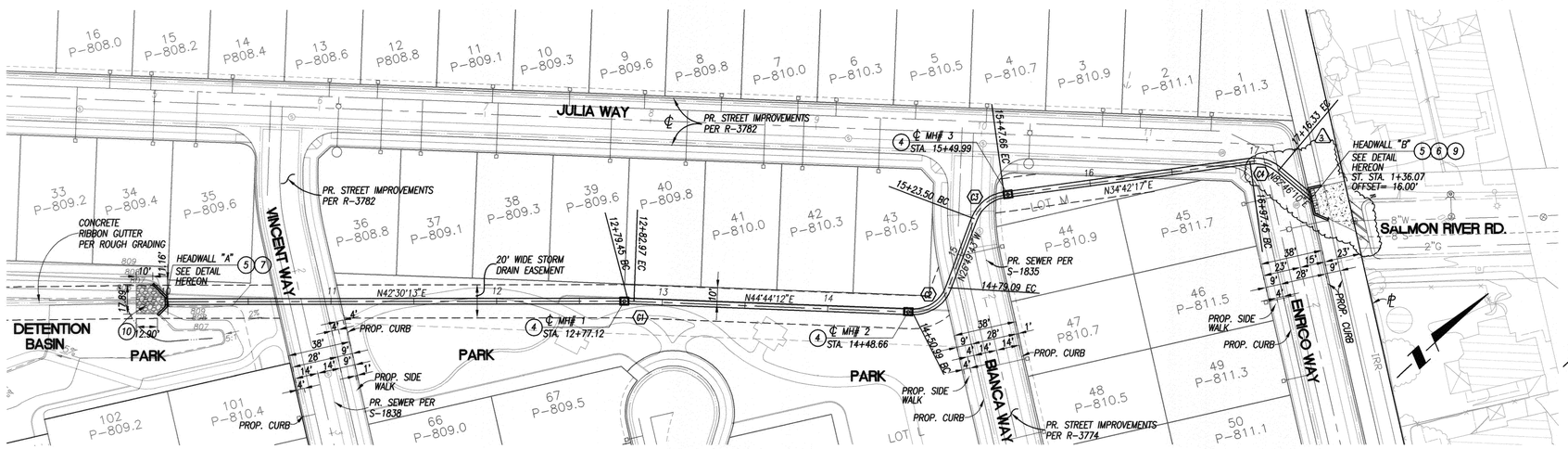

LINE "A"

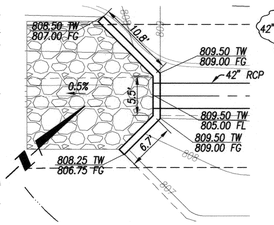

HEADWALL "A" DETAIL
SCALE: 1"=10'

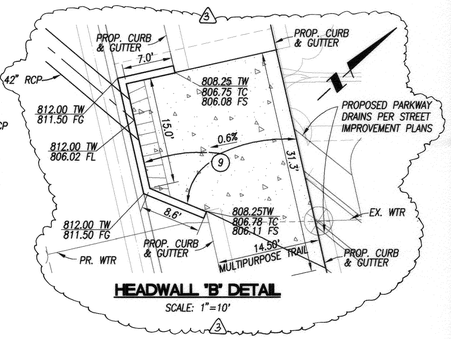

HEADWALL "B" DETAIL
SCALE: 1"=10'

BENCHMARK

CITY OF RIVERSIDE BENCHMARK GPS-51: 2-½" BRASS DISK STAMPED "CITY OF RIVERSIDE GPS STATION 51 1991 CADME" SET IN THE TOP OF A CATCH BASIN ALONG THE NORTHERLY CURB OF COLUMBIA AVENUE, 4 FEET EAST OF THE BCR OF THE NORTHEAST OF MAIN STREET AT COLUMBIA AVE.

ELEV.: 813.66

GRAPHIC SCALE
40 0 20 40 80 160
(IN FEET)
1 inch = 40 ft.

PW04-0857

Underground Service Alert
Call: TOLL FREE 1-800-227-2600
DIAL BEFORE YOU DIG
TWO WORKING DAYS BEFORE YOU DIG
A PUBLIC SERVICE BY UNDERGROUND SERVICE ALERT

Prepared Under The Supervision Of:
Date: 1/4/05
SCOTT M. WILSON
REGISTERED CIVIL ENGINEER NO. 49884
REGISTRATION EXPIRES: 09/30/06

REGISTERED PROFESSIONAL ENGINEER SCOTT M. WILSON No. 49884 Exp. 09/30/06 CIVIL STATE OF CALIFORNIA

WILSON MIKAMI CORPORATION
3 PETERS CANYON, SUITE 110
IRVINE, CA 92606
T: 949-679-0090
F: 949-679-0091

Bench Mark:
GPS-51
SEE THIS SHEET

Scale: SEE PLAN
Date: 12-27-04

RIVERA VILLAS

REVISIONS:

REMARK	DESCRIPTION:	APR.:	DATE:
2	CHANGE OVERALL SHEET NUMBER	MK	05/12/05
3	SEE SHEET 5 FOR NOISANCE WATER ABATEMENT ADDITIONS	MK	05/12/05

DESIGNED: MKW DRAWN: MKW CHECKED: SMW

CITY OF RIVERSIDE ELECTRICAL DEPARTMENT
APPROVED BY 01/19/05

CITY OF RIVERSIDE WATER DEPARTMENT
APPROVED BY MM 1/11/05

CITY OF RIVERSIDE, CALIFORNIA
PUBLIC WORKS DEPARTMENT

Approved By:	BY:	Date:
PRINCIPAL ENG.		1/25/05
PARK DEPARTMENT		01/18/05
TRAFFIC DIVISION		
STREET SERVICES	KEJ	1/11/05

APPROVED BY
CITY ENGINEER
DATE 1/27/05

TRACT 30922-3 STORM DRAIN IMPROVEMENT PLANS

LINE 'A'
STA 10+00 TO STA 17+42.17

D-744
Sheet 2 OF 8 SHEETS
FILE NO. 03-026

File name: S:\10012.10\dwg\prsd0002.dwg 1/4/2005 10:31:2 AM PST

INDEXED 2-8-05 JH

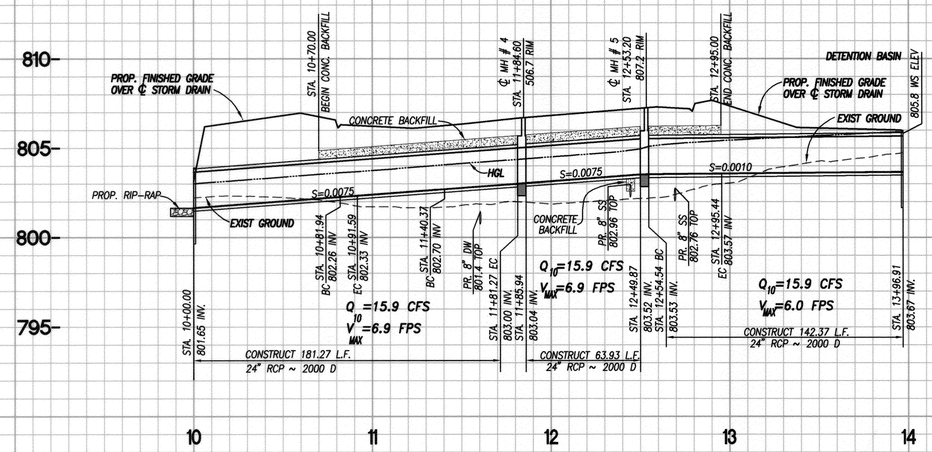

LINE "B"

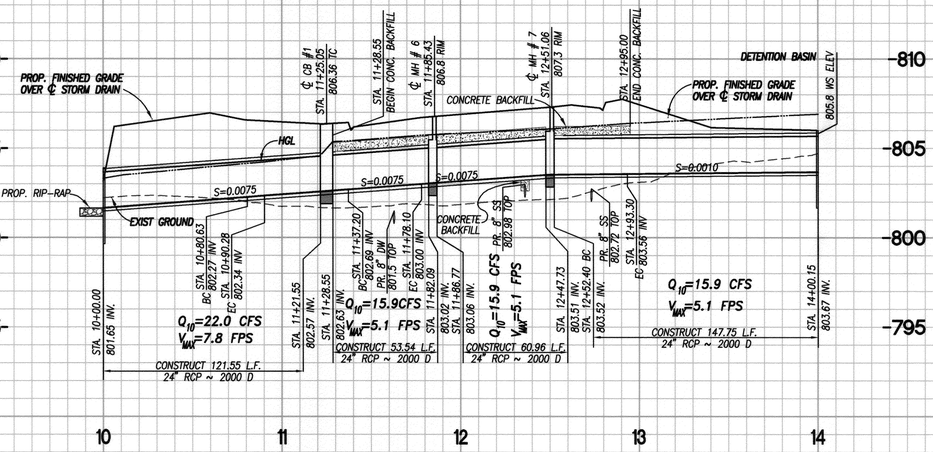

LINE "C"

PROFILE
HORIZ. 1" = 40'
VERT. 1" = 4'

1. CONTRACTOR SHALL POTHOLE AND VERIFY THE EXISTING ELEVATION OF UTILITIES PRIOR TO CONSTRUCTION. CONTRACTOR SHALL NOTIFY THE ENGINEER OF ANY DISCREPANCY PRIOR TO CONSTRUCTION.

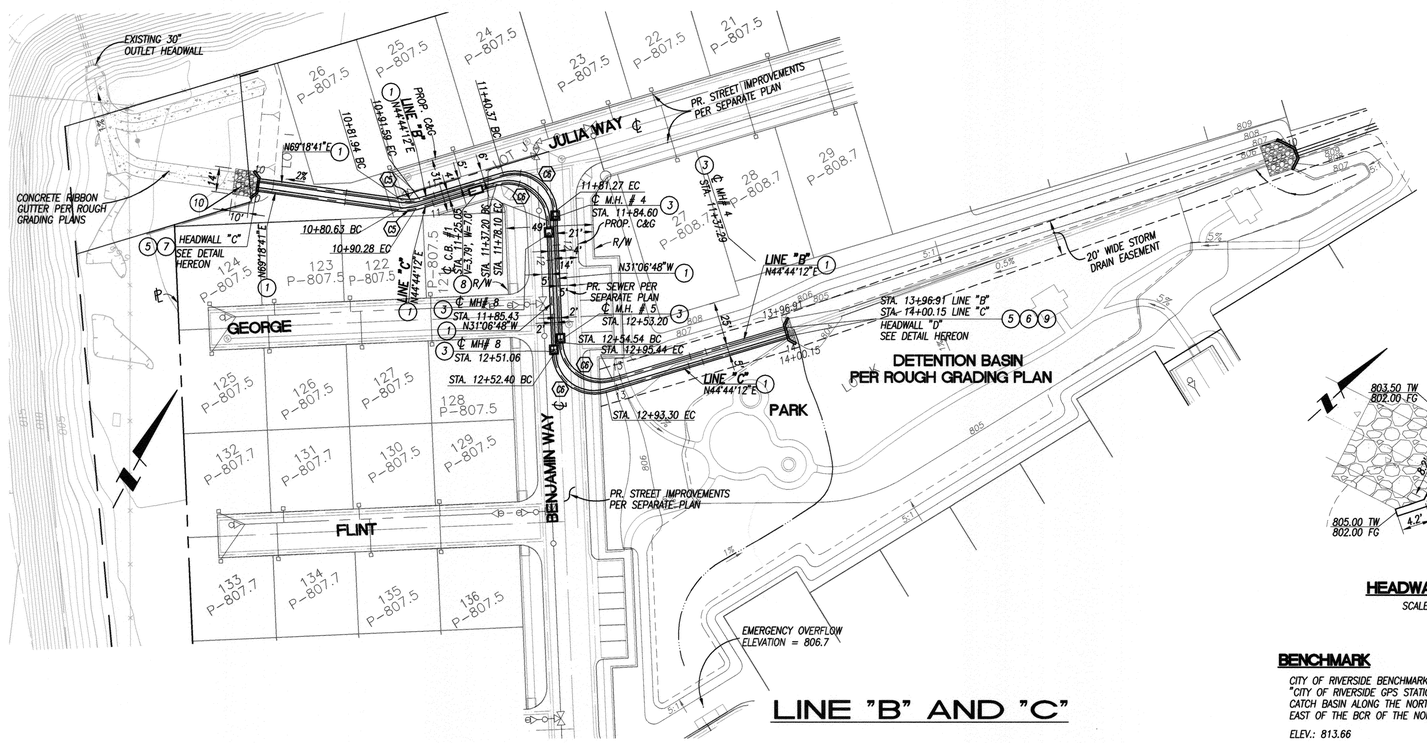

LINE "B" AND "C"

CONSTRUCTION NOTES

1. CONSTRUCT 24" RCP (D-LOAD PER PLAN) BEDDING PER C.O.R. STD 452 (CASE I) WITH CONCRETE BACKFILL PER PROFILE & DETAIL ON SHEET 4
3. CONSTRUCT MANHOLE "EZ" PER C.O.R. STD. 431
5. CONSTRUCT HEADWALL AND WINGWALLS PER CAL TRANS STD. D89 AND D90 DETAILS ON SHEET 4 AND DETAIL ON PLAN
6. CONSTRUCT TRASHRACK PER APWA STD 361 (CASE A)
7. CONSTRUCT PROTECTION BARRIER PER APWA STD 360
8. CONSTRUCT CATCH BASIN PER C.O.R. STD 405 & STENCILING PER DETAIL ON SHEET 4
9. CONSTRUCT 6" THICK PCC SLAB W/ #4 BARS 18" O.C. EACH WAY
10. CONSTRUCT LIGHT WEIGHT RIP RAP PER DETAIL ON SHEET NO. 4

CURVE TABLE				
CURVE	LENGTH	RADIUS	DELTA	TANGENT
C5	9.65'	22.50'	24°34'29"	4.90'
C6	40.90'	22.50'	104°09'00"	28.88'

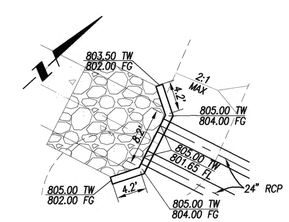

HEADWALL "C" DETAIL
SCALE: 1"=10'

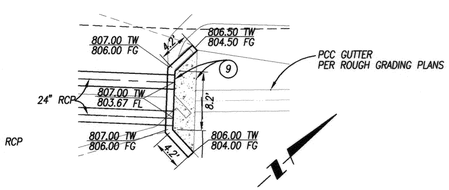

HEADWALL "D" DETAIL
SCALE: 1"=10'

BENCHMARK

CITY OF RIVERSIDE BENCHMARK GPS-51: 2-½" BRASS DISK STAMPED "CITY OF RIVERSIDE GPS STATION 51 1991 CADME" SET IN THE TOP OF A CATCH BASIN ALONG THE NORTHERLY CURB OF COLUMBIA AVENUE, 4 FEET EAST OF THE BCR OF THE NORTHEAST OF MAIN STREET AT COLUMBIA AVE.

ELEV.: 813.66

GRAPHIC SCALE
40 0 20 40 80 160
(IN FEET)
1 inch = 40 ft.

PW04-0857

Underground Service Alert
Call: TOLL FREE 1-800-227-2600
DIAL BEFORE YOU DIG
TWO WORKING DAYS BEFORE YOU DIG
A PUBLIC SERVICE BY UNDERGROUND SERVICE ALERT

Prepared Under The Supervision Of:
Date: 1/4/05
SCOTT M. WILSON
REGISTERED CIVIL ENGINEER NO. 49884
REGISTRATION EXPIRES: 09/30/06

REGISTERED PROFESSIONAL ENGINEER SCOTT M. WILSON No. 49884 Exp. 09/30/06 CIVIL STATE OF CALIFORNIA

WILSON MIKAMI CORPORATION
3 PETERS CANYON, SUITE 110 T: 949-679-0090
IRVINE, CA 92606 F: 949-679-0091

Scale: SEE PLAN
Date: 12-27-04

RIVERA VILLAS

Bench Mark: GPS-51 SEE THIS SHEET

REVISIONS:

REMARK	DESCRIPTION:	APR.:	DATE:
2	CHANGE OVERALL SHEET NUMBER	JH	05/01/15

DESIGNED: MKW DRAWN: MKW CHECKED: SMW

CITY OF RIVERSIDE ELECTRICAL DEPARTMENT
APPROVED BY 1/19/05
CITY OF RIVERSIDE WATER DEPARTMENT
APPROVED BY MM 1/7/05

CITY OF RIVERSIDE, CALIFORNIA
PUBLIC WORKS DEPARTMENT

Approved By:	BY:	Date:
PRINCIPAL ENG.	JH	1/25/05
PARK DEPARTMENT		
TRAFFIC DIVISION		
STREET SERVICES	KEJ	1/11/05

APPROVED BY
CITY ENGINEER
DATE 1/27/05

TRACT 30922-3 STORM DRAIN IMPROVEMENT PLANS

LINES "B" AND "C"
STA 10+00 TO STA 14+08.33

D-744
Sheet 3 OF 26 SHEETS
FILE NO. 03-026

File name: S:\10012.10\dwg\prsd0003.dwg 1/4/2005 10:07:39 AM PST

RVZ

INDEXED 2-8-05 LH

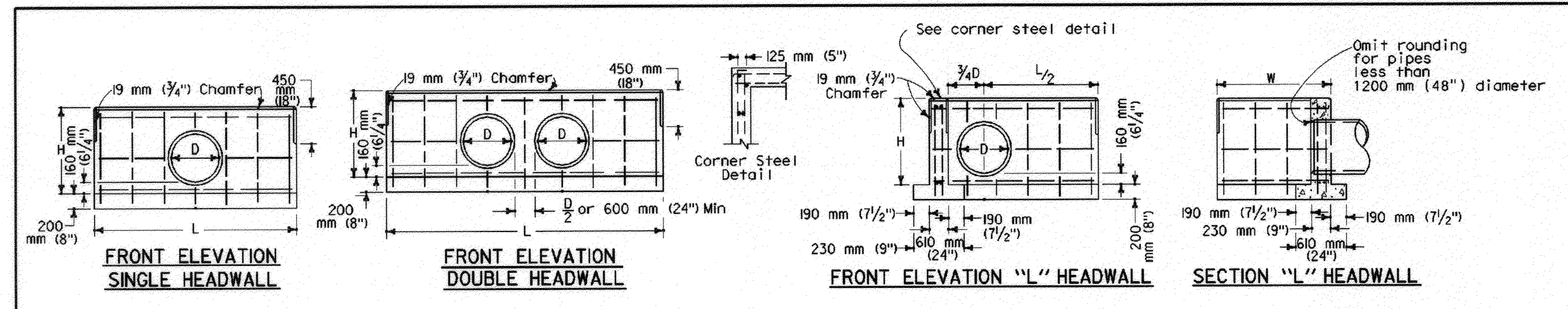

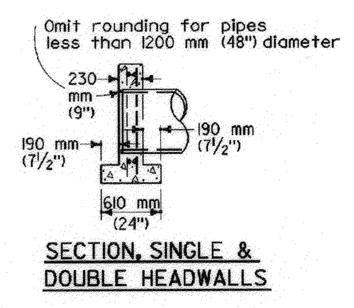

139

NOTES

1. No deduction made in quantities for thickness of pipe walls.
2. All reinforcing steel #13M (#4) bars. All vertical and horizontal tie bars 450 mm (18") maximum spacing.
3. Length of wall "W" may be varied to suit conditions encountered in the field, and straight line interpolation may be used to calculate quantities.
4. Quantities are for design purposes only.
5. Cable railing to be installed on top of headwall when shown on Project Plans. See Standard Plan B11-47 for cable railing details.

D	H	SINGLE L	SINGLE Steel	SINGLE Conc	DOUBLE L	DOUBLE Steel	DOUBLE Conc
300 mm (12")	810 mm (32")	1500 mm (5.0')	16 kg (35 lb)	0.45 m^3 (0.60 CY)	2500 mm (8.0')	24 kg (50 lb)	0.74 m^3 (0.94 CY)
375 mm (15")	885 mm (35")	1800 mm (6.0')	18 kg (40 lb)	0.56 m^3 (0.75 CY)	2950 mm (9.5')	28 kg (60 lb)	0.91 m^3 (1.17 CY)
450 mm (18")	960 mm (38")	2100 mm (7.0')	22 kg (50 lb)	0.68 m^3 (0.91 CY)	3250 mm (10.5')	34 kg (75 lb)	1.04 m^3 (1.35 CY)
525 mm (21")	1035 mm (41")	2250 mm (7.5')	26 kg (60 lb)	0.76 m^3 (1.02 CY)	3550 mm (11.5')	40 kg (90 lb)	1.18 m^3 (1.52 CY)
600 mm (24")	1110 mm (44")	2550 mm (8.5')	34 kg (75 lb)	0.90 m^3 (1.20 CY)	3850 mm (12.5')	46 kg (100 lb)	1.32 m^3 (1.72 CY)
675 mm (27")	1185 mm (47")	2850 mm (9.5')	38 kg (85 lb)	1.04 m^3 (1.39 CY)	4300 mm (14.0')	52 kg (115 lb)	1.53 m^3 (2.00 CY)
750 mm (30")	1260 mm (50")	3000 mm (10.0')	40 kg (85 lb)	1.13 m^3 (1.52 CY)	4600 mm (15.0')	54 kg (126 lb)	1.69 m^3 (2.21 CY)
825 mm (33")	1335 mm (53")	3300 mm (11.0')	44 kg (100 lb)	1.29 m^3 (1.73 CY)	4900 mm (16.0')	58 kg (130 lb)	1.86 m^3 (2.42 CY)
900 mm (36")	1410 mm (56")	3600 mm (12.0')	46 kg (105 lb)	1.46 m^3 (1.95 CY)	5200 mm (17.0')	66 kg (145 lb)	2.03 m^3 (2.65 CY)
975 mm (39")	1485 mm (59")	3750 mm (12.5')	58 kg (130 lb)	1.57 m^3 (2.09 CY)	5500 mm (18.0')	78 kg (170 lb)	2.21 m^3 (2.88 CY)
1050 mm (42")	1560 mm (62")	4050 mm (13.5')	62 kg (140 lb)	1.75 m^3 (2.34 CY)	5800 mm (19.0')	84 kg (185 ;b)	2.39 m^3 (3.13 CY)
1125 mm (45")	1635 mm (65")	4350 mm (14.5')	66 kg (150 lb)	1.94 m^3 (2.60 CY)	6100 mm (20.0')	88 kg (195 lb)	2.58 m^3 (3.38 CY)
1200 mm (48")	1710 mm (68")	4500 mm (15.0')	70 kg (160 lb)	2.06 m^3 (2.75 CY)	6400 mm (21.0')	90 kg (200 lb)	2.78 m^3 (3.64 CY)
1275 mm (51")	1785 mm (71")	4800 mm (16.0')	80 kg (180 lb)	2.26 m^3 (3.03 CY)	6850 mm (22.5')	102 kg (225 lb)	3.06 m^3 (4.02 CY)
1350 mm (54")	1860 mm (74")	5100 mm (17.0')	84 kg (190 lb)	2.47 m^3 (3.31 CY)	7150 mm (23.5')	108 kg (240 lb)	3.27 m^3 (4.30 CY)

STRAIGHT HEADWALLS

D	H	L/2	LENGTH OF W: 1000 mm (40") Steel	Conc	1450 mm (58") Steel	Conc	1900 mm (76") Steel	Conc	2350 mm (94") Steel	Conc	2800 mm (112") Steel	Conc
300 mm (12")	810 mm (32")	750 mm (30")	22 kg (50 lb)	0.59 m^3 (0.79 CY)	26 kg (60 lb)	0.73 m^3 (0.98 CY)	---	---	---	---	---	---
375 mm (15")	885 mm (35")	900 mm (36")	24 kg (55 lb)	0.68 m^3 (0.91 CY)	28 kg (65 lb)	0.83 m^3 (1.11 CY)	---	---	---	---	---	---
450 mm (18")	960 mm (38")	1050 mm (42")	28 kg (65 lb)	0.78 m^3 (1.04 CY)	32 kg (75 lb)	0.94 m^3 (1.25 CY)	---	---	---	---	---	---
525 mm (21")	1035 mm (41")	1125 mm (45")	32 kg (75 lb)	0.86 m^3 (1.15 CY)	40 kg (90 lb)	1.02 m^3 (1.36 CY)	---	---	---	---	---	---
600 mm (24")	1110 mm (44")	1275 mm (51")	38 kg (85 lb)	0.96 m^3 (1.29 CY)	44 kg (100 lb)	1.13 m^3 (1.51 CY)	48 kg (110lb)	1.30 m^3 (1.74 CY)	---	---	---	---
675 mm (27")	1185 mm (47")	1425 mm (57")	40 kg (90 lb)	1.07 m^3 (1.44 CY)	46 kg (105 lb)	1.25 m^3 (1.67 CY)	50 kg (115 lb)	1.43 m^3 (1.91 CY)	---	---	---	---
750 mm (30")	1260 mm (50")	1500 mm (60")	42 kg (95 lb)	1.16 m^3 (1.55 CY)	48 kg (110 lb)	1.34 m^3 (1.80 CY)	52 kg (120 lb)	1.53 m^3 (2.05 CY)	60 kg (135 lb)	1.72 m^3 (2.29 CY)	---	---
825 mm (33")	1335 mm (53")	1650 mm (66")	46 kg (105 lb)	1.28 m^3 (1.71 CY)	52 kg (120 lb)	1.47 m^3 (1.97 CY)	60 kg (135 lb)	1.67 m^3 (2.23 CY)	66 kg (150 lb)	1.86 m^3 (2.48 CY)	---	---
900 mm (36")	1410 mm (56")	1800 mm (72")	48 kg (110 lb)	1.40 m^3 (1.88 CY)	54 kg (125 lb)	1.61 m^3 (2.15 CY)	62 kg (140 lb)	1.81 m^3 (2.41 CY)	68 kg (155 lb)	2.01 m^3 (2.68 CY)	74 kg (170 lb)	2.21 m^3 (2.95 CY)
975 mm (39")	1485 mm (59")	1875 mm (75")	---	---	66 kg (150 lb)	1.71 m^3 (2.28 CY)	74 kg (170 lb)	1.92 m^3 (2.56 CY)	80 kg (185 lb)	2.13 m^3 (2.84 CY)	88 kg (200 lb)	2.33 m^3 (3.12 CY)
1050 mm (42")	1560 mm (62")	2025 mm (81")	---	---	68 kg (155 lb)	1.85 m^3 (2.42 CY)	76 kg (175 lb)	2.07 m^3 (2.76 CY)	84 kg (190 lb)	2.28 m^3 (3.05 CY)	92 kg (210 lb)	2.50 m^3 (3.34 CY)
1125 mm (45")	1635 mm (65")	2175 mm (87")	---	---	---	---	78 kg (180 lb)	2.22 m^3 (2.97 CY)	88 kg (200 lb)	2.45 m^3 (3.27 CY)	94 kg (215 lb)	2.67 m^3 (3.57 CY)
1200 mm (48")	1710 mm (68")	2250 mm (90")	---	---	---	---	84 kg (190 lb)	2.34 m^3 (3.13 CY)	94 kg (216 lb)	2.57 m^3 (3.44 CY)	100 kg (230 lb)	2.81 m^3 (3.75 CY)
1275 mm (51")	1785 mm (71")	2400 mm (96")	---	---	---	---	---	---	96 kg (220 lb)	2.75 m^3 (3.67 CY)	102 kg (235 lb)	2.98 m^3 (3.99 CY)
1350 mm (54")	1860 mm (74")	2550 mm (102")	---	---	---	---	---	---	102 kg (235 lb)	2.92 m^3 (3.91 CY)	110 kg (250 lb)	3.17 m^3 (4.24 CY)

"L" HEADWALLS

CIRCULAR PIPE CULVERT HEADWALLS

DIST	COUNTY	ROUTE	KILOMETER POST TOTAL PROJECT	SHEET NO.	TOTAL SHEETS

REGISTERED CIVIL ENGINEER — July 1, 2002 — PLANS APPROVAL DATE

Glenn DeCou No. C34547 Exp. 9-30-03 CIVIL

The State of California or its officers or agents shall not be responsible for the accuracy or completeness of electronic copies of this plan sheet.

Caltrans now has a web site! To get to the web site, go to: http://www.dot.ca.gov

STATE OF CALIFORNIA
DEPARTMENT OF TRANSPORTATION

PIPE HEADWALLS

These "Standard Plans for Construction of Local Streets and Roads" contain units in two systems of measurement: International System of Units (SI or "metric") and United States Standard Measures shown in the parentheses (). The measurements expressed in the two systems are not necessarily equal or interchangeable. See the "Foreword" at the beginning of this publication.

NO SCALE — D89

2002 DUAL UNITS STD PLAN D89

THIS STANDARD PLAN D89 INCLUDES CHANGES THAT WERE INCORPORATED IN REVISED STANDARD PLAN RSP D89, DATED OCTOBER 26, 2000, AND ISSUED AS A PART OF ERRATUM NO. 99-1 FOR THE 1999 METRIC STANDARD PLANS.

141

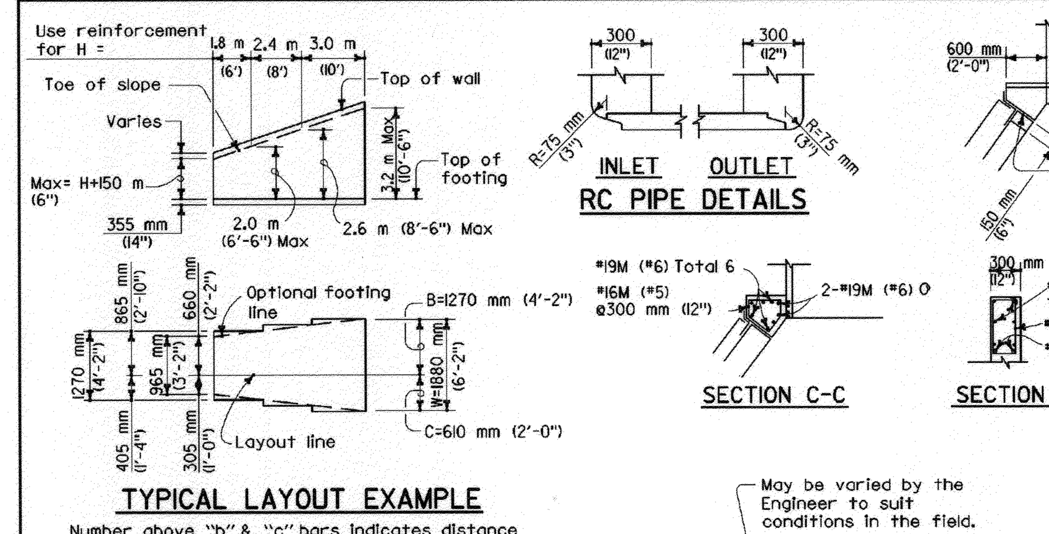

Number above "b" & "c" bars indicates distance from top of footing to upper end of bars. Bar cutoffs may be varied in increments of 150 mm (6").

NOTES

Unit Stresses: f_s = 165 MPa (24,000 psi), f_c = 9 MPa (1,300 psi), n = 10
Maximum Toe Pressure = 144 kPa (3 k/sf).
Elevation, length and angle of flare of wings may be varied by the Engineer to suit conditions encountered in the field. Walls designed for 600 mm (2') live load surcharge, 1:1.5 (1:1.5) sloping surcharge not to exceed 1.5 m (5') in elevation plus 600 mm (24") live load surcharge, or unlimited 1:2 (2:1) surcharge. If 1:1.5 (1 1/2:1) slope exceeds 1.5 m (5'), use Type 2 retaining wall. Wall height may be exceeded by 150 mm (6") before going to the next greater "H".

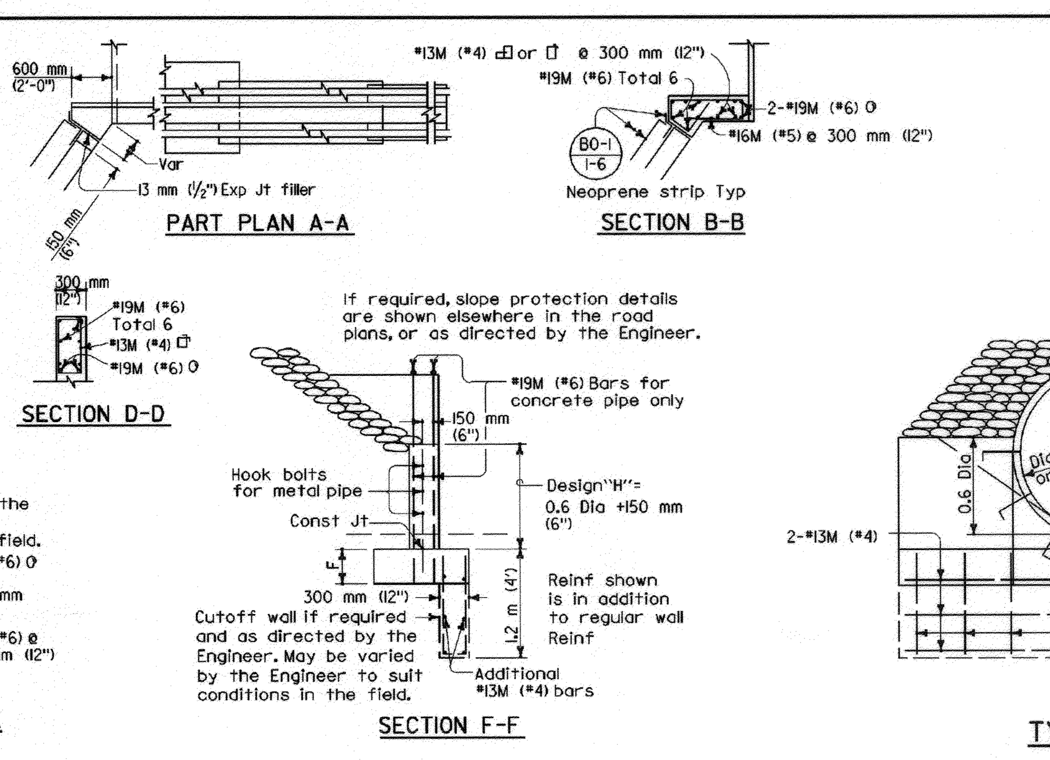

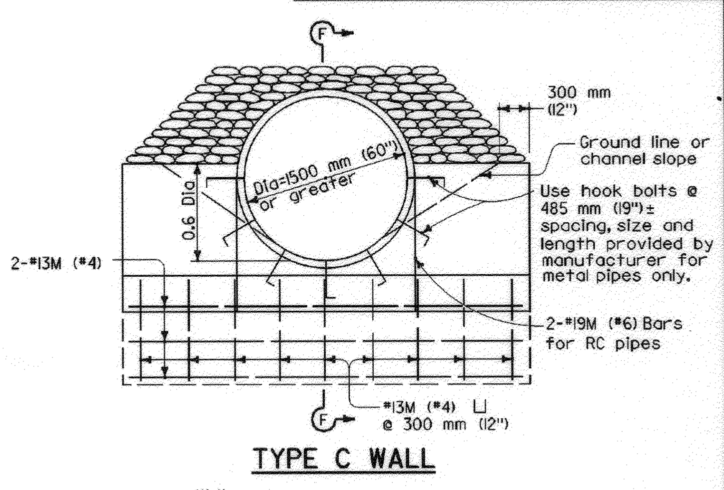

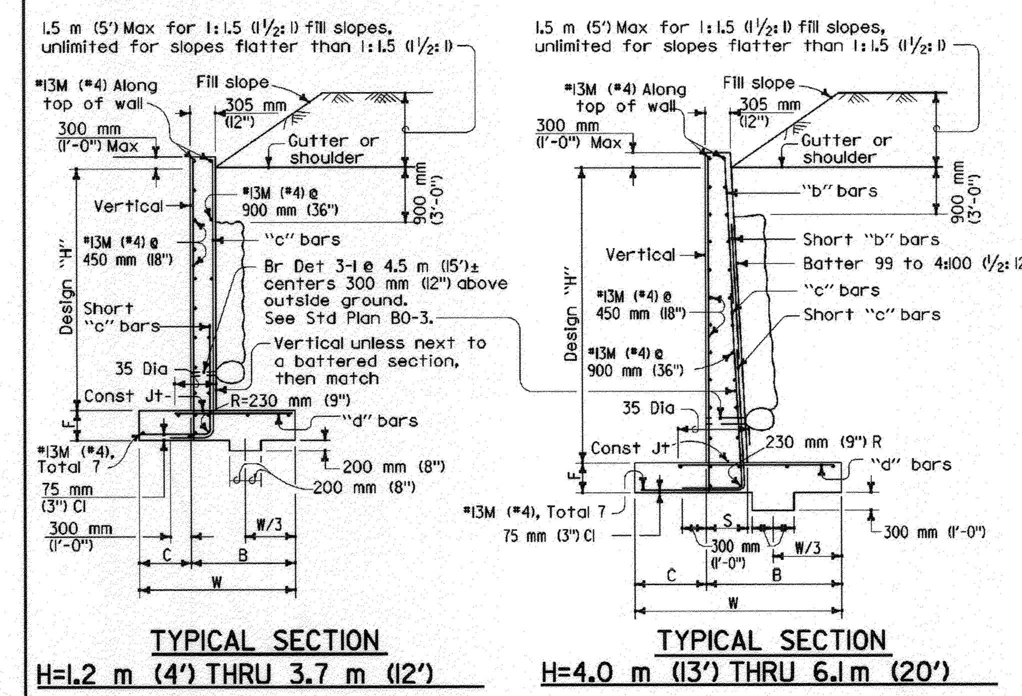

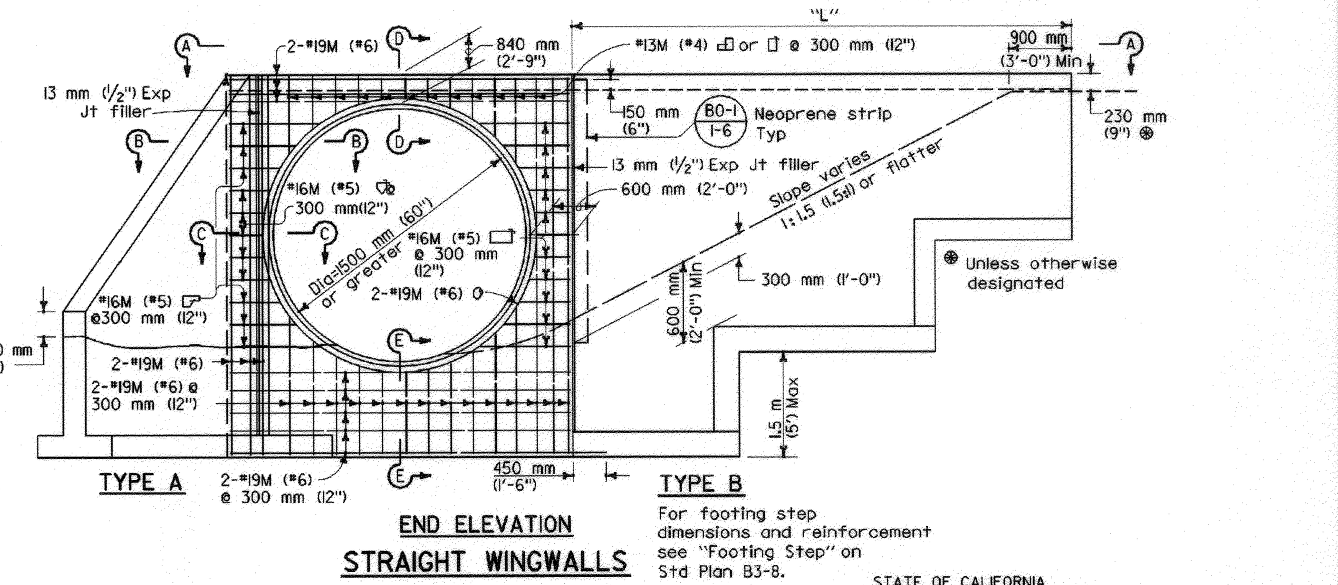

For footing step dimensions and reinforcement see "Footing Step" on Std Plan B3-8.

DIST	COUNTY	ROUTE	KILOMETER POST TOTAL PROJECT	SHEET NO.	TOTAL SHEETS

REGISTERED CIVIL ENGINEER — July 1, 2002 — PLANS APPROVAL DATE

Paul Cotter No. C34509 Exp. 9-30-03 CIVIL

The State of California or its officers or agents shall not be responsible for the accuracy or completeness of electronic copies of this plan sheet.

Caltrans now has a web site! To get to the web site, go to: http://www.dot.ca.gov

STATE OF CALIFORNIA
DEPARTMENT OF TRANSPORTATION

PIPE CULVERT HEADWALLS, ENDWALLS AND WINGWALLS TYPES A, B AND C

These "Standard Plans for Construction of Local Streets and Roads" contain units in two systems of measurement: International System of Units (SI or "metric") and United States Standard Measures shown in the parentheses (). The measurements expressed in the two systems are not necessarily equal or interchangeable. See the "Foreword" at the beginning of this publication.

NO SCALE — D90A

2002 DUAL UNITS STD PLAN D90A

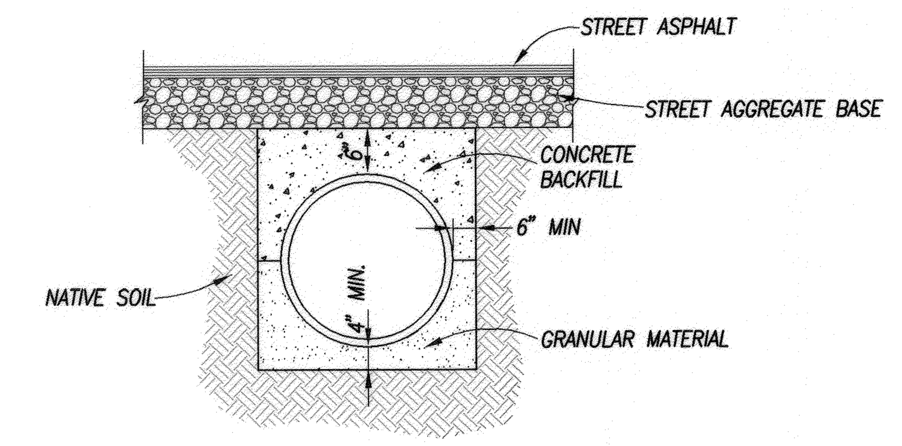

CONCRETE BACKFILL DETAIL

N.T.S.

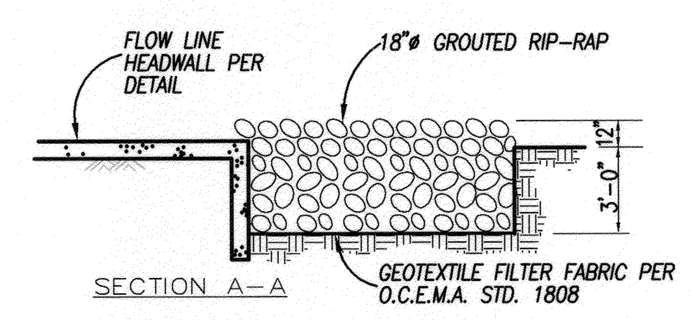

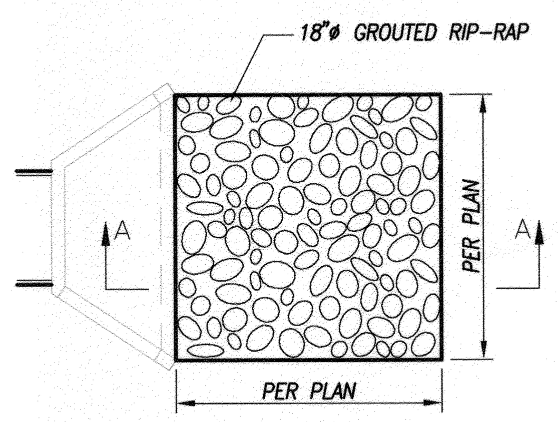

LIGHT CLASS RIP RAP PAD DETAIL

N.T.S.

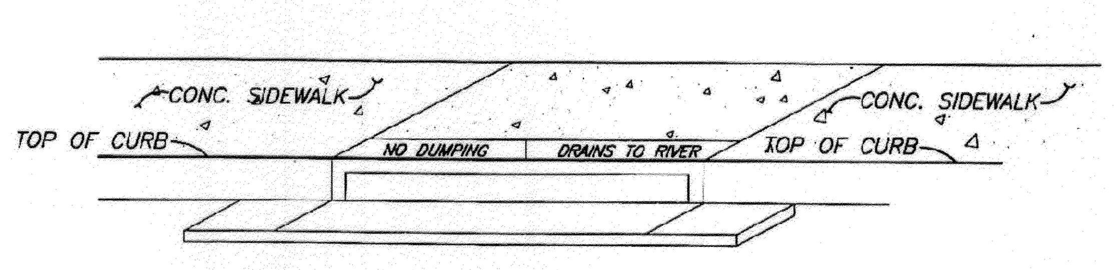

(A) STENCILS TO HAVE 2" LETTERS AS FOLLOWS :
NO DUMPING
DRAINS TO RIVER

(B) PLACE BOTH STENCILS CENTERED WITHIN THE CATCHBASIN OPENING AND WITHIN THE TOP OF CURB.

(C) SPRAY BOTH STENCILS WITH WHITE PAINT.

(D) REMOVE STENCILS WHEN PAINT IS DRY.

CATCH BASIN STENCILING DETAIL

N.T.S.

PW04-0857

Underground Service Alert
Call: TOLL FREE
1-800-227-2600
DIAL BEFORE YOU DIG
TWO WORKING DAYS BEFORE YOU DIG
A PUBLIC SERVICE BY UNDERGROUND SERVICE ALERT

Prepared Under The Supervision Of:
Date 1/4/05
SCOTT M. WILSON
REGISTERED CIVIL ENGINEER NO. 49884
REGISTRATION EXPIRES: 09/30/06

REGISTERED PROFESSIONAL ENGINEER — SCOTT M. WILSON — No. 49884 — Exp. 09/30/06 — CIVIL — STATE OF CALIFORNIA

WILSON MIKAMI CORPORATION
3 PETERS CANYON, SUITE 110 — T: 949-679-0090
IRVINE, CA 92606 — F: 949-679-0091

Scale: SEE PLAN
Date: 12-27-04

Bench Mark:

RIVERA VILLAS

REVISIONS:

REMARK	DESCRIPTION:	APR.:	DATE:
2	CHANGE OVERALL SHEET NUMBER		05/13/15

DESIGNED: MKW — DRAWN: MKW — CHECKED: SMW

CITY OF RIVERSIDE ELECTRICAL DEPARTMENT — APPROVED BY — 1/19/05
CITY OF RIVERSIDE WATER DEPARTMENT — APPROVED BY — 1/7/05

CITY OF RIVERSIDE, CALIFORNIA
PUBLIC WORKS DEPARTMENT

Approved By:	BY:	Date:
PRINCIPAL ENG.		1/25/05
PARK DEPARTMENT		
TRAFFIC DIVISION		
STREET SERVICES	KEJ	1/11/05

APPROVED BY — CITY ENGINEER — DATE 1/27/05

TRACT 30922-3 STORM DRAIN IMPROVEMENT PLANS

DETAILS SHEET

D-744

Sheet 4 (2) OF 46 SHEETS

FILE NO. 03-026

File name: S:\10012.10\dwg\prsd0004.dwg 1/4/2005 10:13:28 AM PST

INDEXED 2-8-05

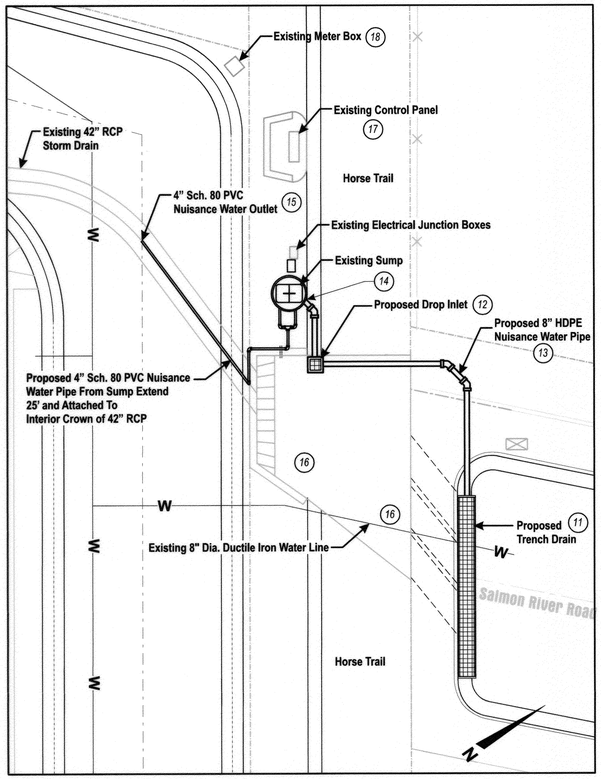

A Site Vicinity Plan

0 10 20 Feet
Approximate Scale

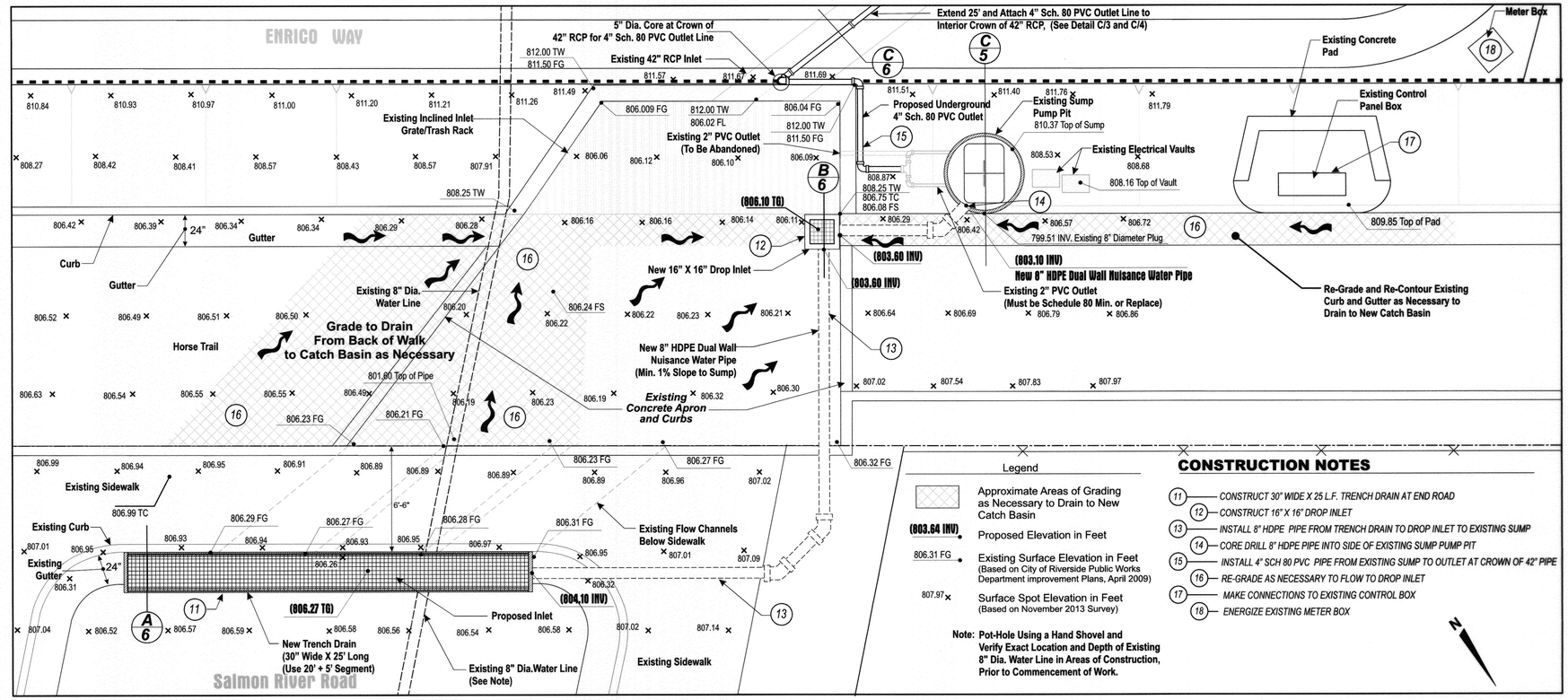

B Site Plan with Proposed Drop Inlet, Nuisance Water Pipe and Existing Sump with Components

0 4 8 Feet
Approximate Scale

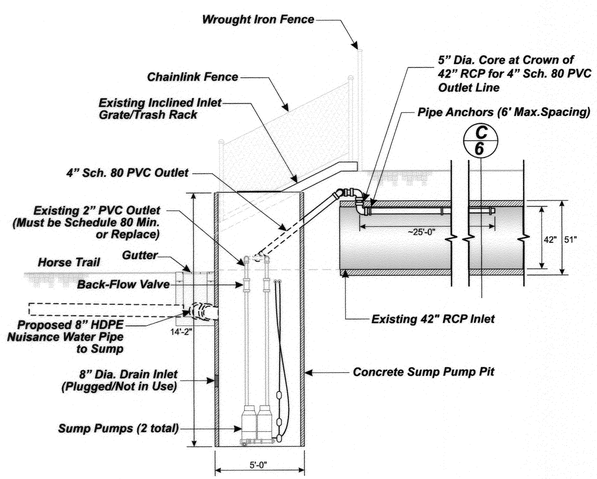

C Cross Section Through Sump Pump

0 4 8 Feet
Approximate Scale

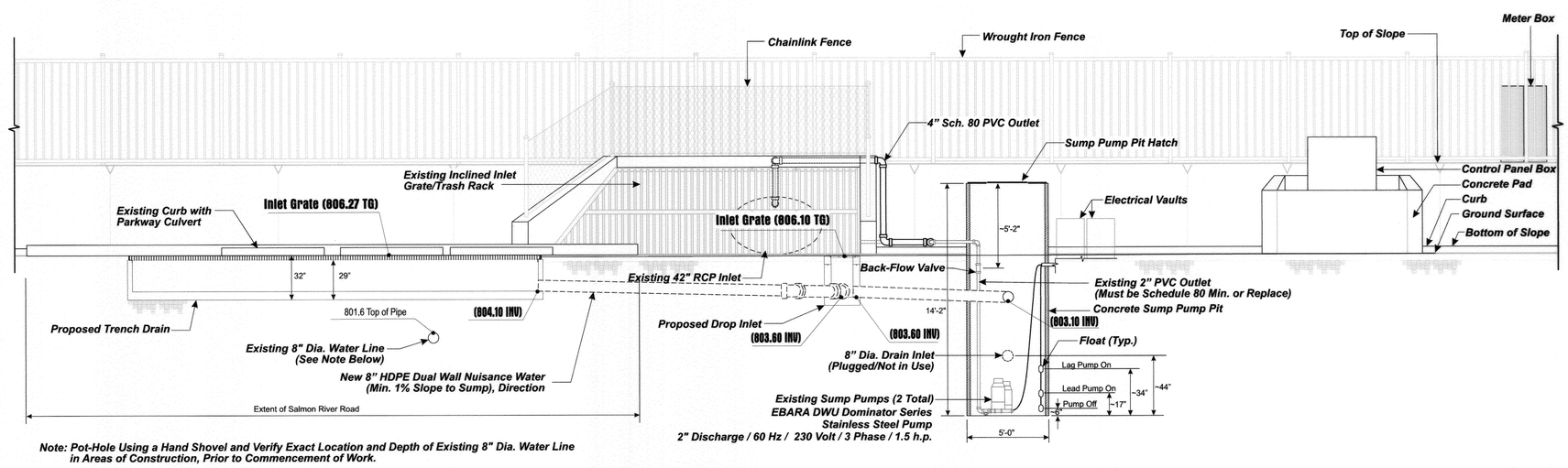

Note: Pot-Hole Using a Hand Shovel and Verify Exact Location and Depth of Existing 8" Dia. Water Line in Areas of Construction, Prior to Commencement of Work.

D Elevation of Existing Inlet and Proposed Nuisance Water Drop Inlet to Sump Pump with Sump Components

0 4 8 Feet
Approximate Scale

PW04-0857

Underground Service Alert
Call: TOLL FREE 1-800-227-2600
DIAL BEFORE YOU DIG
TWO WORKING DAYS BEFORE YOU DIG
A PUBLIC SERVICE BY UNDERGROUND SERVICE ALERT

Prepared Under The Supervision Of:
Date: 4/9/2016
GLENN D. TOFAN
REGISTERED CIVIL ENGINEER NO. 044229
REGISTRATION EXPIRES: 06/30/15

REGISTERED PROFESSIONAL ENGINEER GLENN D. TOFAN No. 044229 Exp. 6-30-15 CIVIL STATE OF CALIFORNIA

GeoKinetics
Geotechnical & Environmental Engineers
77 Bunsen
Irvine, C.A. 92618
Tel 949.502.5353
Fax 949.502.5354

Bench Mark:

Scale: SEE PLAN
Date: 04-09-15

RIVERA VILLAS

REVISIONS:

REMARK	DESCRIPTION:	APR.:	DATE:
4	NEW SHEET 5 NUISANCE WATER ABATEMENT	GDT	05/19/15

DESIGNED: GDT DRAWN: BDB CHECKED: KJL

CITY OF RIVERSIDE ELECTRICAL DEPARTMENT
APPROVED BY
CITY OF RIVERSIDE WATER DEPARTMENT
APPROVED BY

CITY OF RIVERSIDE, CALIFORNIA
PUBLIC WORKS DEPARTMENT

Approved By:	BY:	Date:
PRINCIPAL ENG.		
PARK DEPARTMENT		
TRAFFIC DIVISION		
STREET SERVICES		

APPROVED BY
CITY ENGINEER
DATE 5/29/2015

TRACT 30922-3 STORM DRAIN IMPROVEMENT PLANS

NUISANCE WATER INLET AND SUMP PUMP - PLAN & PROFILE

File name: GeoKinetics/ La Rivera/ Sheet 5.des 4/9/2015

D-744
Sheet 5 OF 6 SHEETS
FILE NO. 03-026

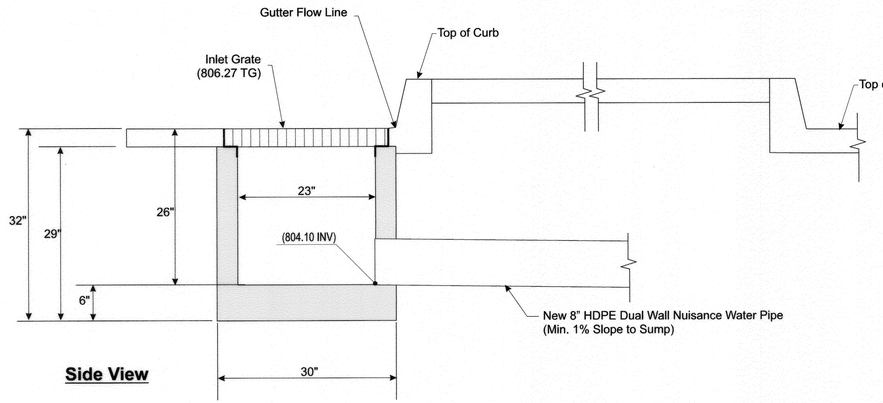

A ***New Precast Trench Drain (Jensen Precast Model 2222 with H-20 Traffic Grate)***
Not to Scale

0 1 2 Feet
Approximate Scale

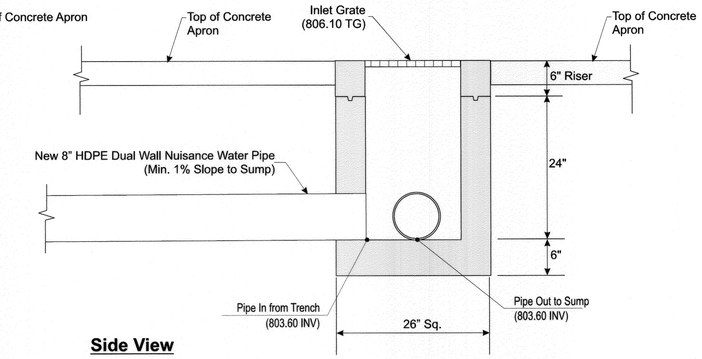

B ***New 16" X 16" Precast Drop Inlet (Jensen Precast 1616-HDI)***
Not to Scale

0 1 2 Feet
Approximate Scale

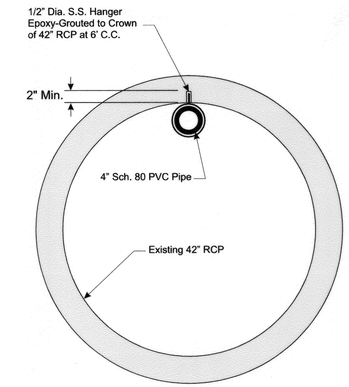

C ***Existing 42" RCP Pipe with 2" Nuisance Water Drain Line***
Not to Scale

1616-HDI

16" LONG x 16" WIDE x 24" HIGH DROP INLET WITH ADJUSTABLE FRAME & GRATE

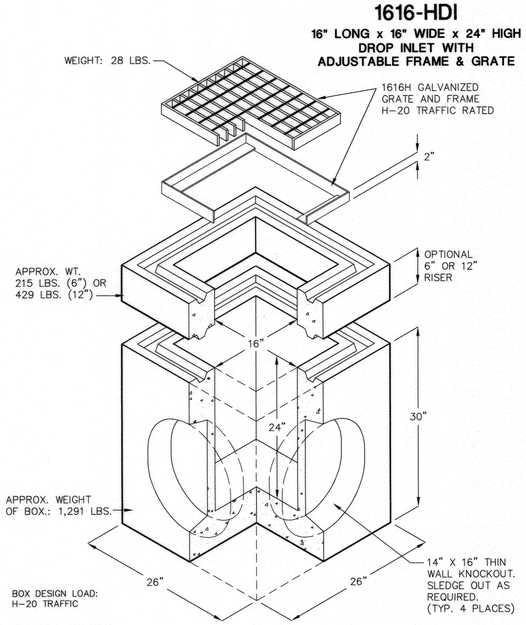

FOR COMPLETE DESIGN
AND PRODUCT INFORMATION,
CONTACT JENSEN PRECAST.

10/11/00
DI1616-v2.dwg
© 2000 Jensen Precast

JENSEN PRECAST

D ***New 16" X 16" Precast Drop Inlet (Jensen Precast 1616-HDI)***
Not to Scale

DRAINAGE TRENCH

MODEL 2222 SHOWN WITH H-20 TRAFFIC GRATE

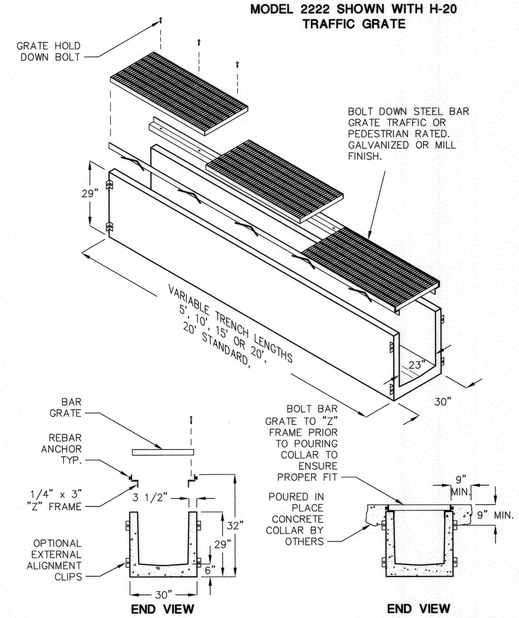

FOR COMPLETE DESIGN
AND PRODUCT INFORMATION
CONTACT JENSEN PRECAST.

7/14/03
DrainageTrench2222.dwg
© 1999 Jensen Precast

JENSEN PRECAST

E ***New Precast Trench Drain (Jensen Precast Model 2222 with H-20 Traffic Grate)***
Not to Scale

Model DWX(A)U
DWXF(A)U

Vortex Impeller

Existing Sump Pumps (2 Total)
EBARA DWU Dominator Series
Stainless Steel Pump
2" Discharge / 60 Hz / 230 Volt / 3 Phase / 1.5 h.p.

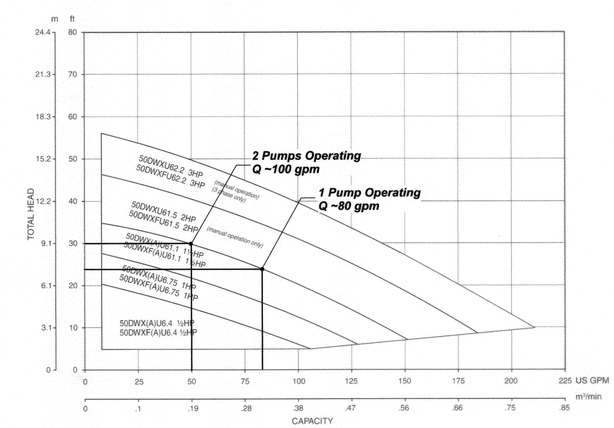

F ***Design Operating Conditions for Sump Pumps***

PW04-0857

Underground Service Alert
Call: TOLL FREE
1-800-227-2600
DIAL BEFORE
YOU DIG
TWO WORKING DAYS BEFORE YOU DIG
A PUBLIC SERVICE BY UNDERGROUND SERVICE ALERT

Prepared Under The Supervision Of:
GLENN D. TOFANI
Date: 4/9/2015 REGISTERED CIVIL ENGINEER NO. 044229
REGISTRATION EXPIRES: 06/30/15

REGISTERED PROFESSIONAL ENGINEER
GLENN D. TOFANI
No. 044229
Exp. 6-30-15
CIVIL
STATE OF CALIFORNIA

GeoKinetics
Geotechnical & Environmental Engineers
77 Bunsen
Irvine, C.A. 92618
Tel 949.502.5353
Fax 949.502.5354

Bench Mark:

Scale: SEE PLAN
Date: 04-09-15

RIVERA VILLAS

REVISIONS:

REMARK	DESCRIPTION:	APR.:	DATE:
4	NEW SHEET 6 NUISANCE WATER ABATMENT.		4/9/15

DESIGNED: MKW DRAWN: MKW CHECKED: SMW

CITY OF RIVERSIDE
ELECTRICAL DEPARTMENT
APPROVED BY

CITY OF RIVERSIDE
WATER DEPARTMENT
APPROVED BY

CITY OF RIVERSIDE, CALIFORNIA
PUBLIC WORKS DEPARTMENT

Approved By:	BY:	Date:
PRINCIPAL ENG.		
PARK DEPARTMENT		
TRAFFIC DIVISION		
STREET SERVICES		

APPROVED BY
CITY ENGINEER
DATE 5/15/2015

TRACT 30922-3 STORM DRAIN IMPROVEMENT PLANS

NUISANCE WATER INLET DETAILS

File name: GeoKinetics/ La Rivera/ Sheet 6.des 4/9/2015

D-744
Sheet 6 OF 6 SHEETS
FILE NO. 03-026