CITY OF RIVERSIDE

STORM DRAIN IMPROVEMENT PLANS

TRACT NO. 30508-1 PHASE2

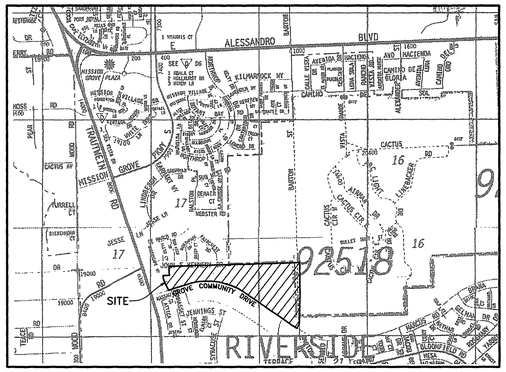

VICINITY MAP

NOT TO SCALE

NORTH

CONSTRUCTION NOTES

1. CONSTRUCT ENERGY DISSIPATOR – IMPACT BASIN WITH VERTICAL BAFFLE WALL, BASIN WIDTH = 18.0' STD. NO. 384, SHEETS 1 THROUGH 8, PER AMERICAN PUBLIC WORKS ASSOCIATION CONSTRUCTION STANDARDS 1999 EDITION AND DETAIL ON SHEET 4.
2. CONSTRUCT 78" R.C.P. (D-LOAD PER PLAN) OR C.I.P.P.
3. CONSTRUCT 48" R.C.P. (D-LOAD PER PLAN) OR C.I.P.P.
4. CONSTRUCT 30" R.C.P. (D-LOAD PER PLAN).
5. CONSTRUCT 18" R.C.P., CLASS IV.
6. CONSTRUCT JUNCTION STRUCTURE B PER CITY STD. NO. 421.
   A=50'; B=36"; C=7.7; D=78"; E'=6.1'; L'=5.8'; EL R=1657.31; EL S=1656.19
7. CONSTRUCT MANHOLE AX PER CITY STD. NO. 430.
8. CONSTRUCT MANHOLE JM PER CITY STD. NO. 432.
   A=30'; B=48"; C'=13.7'; D=78"; E'=13.3'; L'=14.3'; EL R=1669.82; EL S=1669.74.
8A. CONSTRUCT MANHOLE JM PER CITY STD. NO. 432.
   A=30'; B=30"; C'=9.3'; D1=30";D2=48"; E'=9.1'; L'=10.1'; EL R=1672.57; EL S=1671.98
9. CONSTRUCT CONCRETE COLLAR PER CITY STD. NO. 424.
10. CONSTRUCT GROUTED RIP RAP PER PLAN AND DETAILS ON SHEET 4.
11. CONSTRUCT GRATED CATCH BASIN – ALLEY (TRANSVERSE), W, V AND t PER STD. NO. 305-2 SHEET 1 AND 2, PER STANDARD PLANS FOR AMERICAN PUBLIC WORKS ASSOCIATION CONSTRUCTION STANDARDS 1999 EDITION AND DETAIL ON SHEET 4.
12. CONSTRUCT CATCH BASIN PER CITY OF RIVERSIDE STD. DWG. NO. 405 W AND V PER PLAN
13. CONSTRUCT JUNCTION STRUCTURE NO. 4 PER CITY OF RIVERSIDE STD. DWG. NO. 423.
14. CONSTRUCT RETAINING WALL TYPE 5 PER CALTRANS STD DWG B3-7 AND DETAIL ON SHEET 4.

NORTH

200' 100' 0 100' 200'

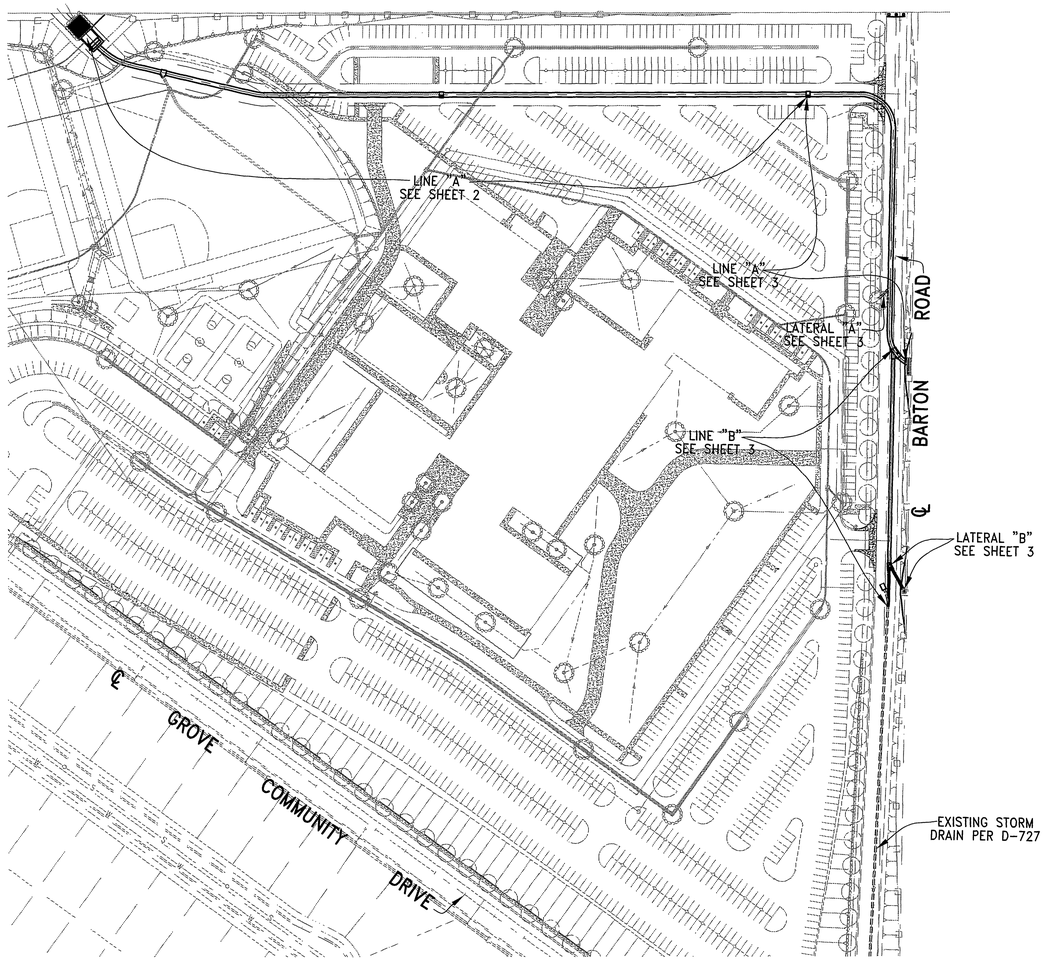

INDEX MAP

GENERAL NOTES

1. IT SHALL BE THE RESPONSIBILITY OF THE CONTRACTOR TO CLEAR THE RIGHT-OF-WAY IN ACCORDANCE WITH THE PROVISIONS OF LAW AS IT AFFECTS EACH UTILITY INCLUDING IRRIGATION LINES AND APPURTENANCES AND AT NO COST TO THE CITY.
2. CONSTRUCTION SHALL BE IN ACCORDANCE WITH THE CITY OF RIVERSIDE DEPT. OF PUBLIC WORKS STANDARD DRAWINGS, IT'S SUPPLEMENTAL NOTES, AND THE STANDARD SPECIFICATIONS FOR PUBLIC WORKS CONSTRUCTION, CURRENT EDITION.
3. THE PRIVATE ENGINEER SIGNING THESE PLANS IS RESPONSIBLE FOR ASSURING THE ACCURACY AND ACCEPTABILITY OF THE WORK HEREON. IN THE EVENT OF DISCREPANCIES
   ARISING DURING CONSTRUCTION, THE PRIVATE ENGINEER SHALL BE RESPONSIBLE FOR DETERMINING AN ACCEPTABLE SOLUTION AND REVISING THE PLANS FOR APPROVAL BY THE CITY.
4. QUANTITIES SHOWN ARE FOR INFORMATION ONLY AND THE CITY OF RIVERSIDE IS NOT RESPONSIBLE FOR THEIR ACCURACY.
5. THE DEVELOPER SHALL BE RESPONSIBLE FOR PRESERVING OR RE-ESTABLISHING AND REFERENCING SURVEY MONUMENTS DESTROYED, DISTURBED OR BURIED AS A RESULT OF CONSTRUCTION SHOWN HEREON.
6. ALL FLAGGED ELEVATIONS SHALL BE STAKED IN THE FIELD BY THE PRIVATE ENGINEER.
7. ALL STATIONING REFERS TO CENTERLINE OF CONSTRUCTION UNLESS OTHERWISE NOTED. STATIONING FOR LATERALS AND CONNECTOR PIPES REFER TO THE CENTERLINE-CENTERLINE INTERSECTION.
8. HOURS OF OPERATION ARE 7 A.M. TO 6 P.M. MONDAY THROUGH FRIDAY. DUST SHALL BE CONTROLLED BY WATERING OR OTHER APPROVED METHODS.
9. NO PERSON SHALL PERFORM ANY CONSTRUCTION ACTIVITY OR INSTALL ANY OBJECTS WITHIN THE PUBLIC RIGHTS-OF-WAY OR EASEMENTS OF THE CITY OF RIVERSIDE WITHOUT A VALID CONSTRUCTION PERMIT OR A STREET OPENING PERMIT OR AN ENCROACHMENT PERMIT ISSUED BY THE CITY'S PUBLIC WORKS DEPARTMENT.
10. ANY TRAFFIC CONTROL STRIPING OBLITERATED AND OR BADLY WORN DURING CONSTRUCTION SHALL BE RESTORED BY THE CONTRACTOR WITHIN FIVE DAYS AFTER NOTIFICATION FROM THE CITY INSPECTORS.
11. THE CONTRACTOR SHALL CALL IN A LOCATION REQUEST TO UNDERGROUND SERVICE ALERT (U.S.A.), PHONE NO. 1-800-227-2699, TWO WORKING DAYS BEFORE DIGGING. NO CONSTRUCTION PERMIT WILL BE ISSUED BY THE PUBLIC WORKS DEPARTMENT INVOLVING EXCAVATION FOR UNDERGROUND FACILITIES UNLESS THE APPLICANT HAS BEEN PROVIDED AN INQUIRY IDENTIFICATION NUMBER BY U.S.A.
12. ALL CROSS SECTIONS ARE TAKEN LOOKING UPSTREAM.
13. CONTRACTOR TO VERIFY EXISTING STORM DRAIN ELEVATIONS PRIOR TO CONSTRUCTION.
14. PIP BEDDING SHALL BE PER CITY OF RIVERSIDE STD. DWG. NO. 452, CASE 1 UNLESS OTHERWISE NOTED.
15. THE STORM DRAIN CONTRACTOR SHALL ADJUST STORM DRAIN MANHOLES TO FINAL GRADE AFTER PAVING IS COMPLETED.
16. PIPE SECTIONS TO BE BEVELED AT ONE OR BOTH ENDS AS NEEDED TO MEET SYSTEM DESIGN PARAMETERS. SECTIONS BEVELED IN THIS MANNER NORMALLY FIT TOGETHER ON A 90-, 45-, OR 22.5 FOOT RADIUS CURVE.
17. BEFORE THE RIP-RAP AT THE OUTLET OF ANY DRAINAGE STRUCTURE IS ACCEPTED BY THE CITY, IT SHALL BE TESTED UNDER FLOW AS CLOSE AS POSSIBLE TO DESIGN CONDITIONS WITH WATER OBTAINED FROM FIRE HYDRANTS IN THE IMMEDIATE AREA.

C.I.P.P. NOTES

1. CAST-IN-PLACE CONCRETE PIPE CONSTRUCTION SHALL BE IN ACCORDANCE WITH 306-4 OF THE STANDARD SPECIFICATION FOR PUBLIC WORKS CONSTRUCTION.
2. FULL-TIME INSPECTION SHALL BE PROVIDED AT NO COST TO THE CITY BY A CITY APPROVED INSPECTOR. TWO WEEKS PRIOR TO CONSTRUCTION THE RESUME OF THE PROPOSED INSPECTOR SHALL BE SUBMITTED TO THE CITY FOR APPROVAL.
3. TRENCHING SHALL BE COMPLETED WITH A CURVED BUCKET TO CREATE A SEMI-CIRCULAR TRENCH.
4. MATERIAL TESTING IN ACCORDANCE WITH SECTION 306-4.7 OF THE STANDARD SPECIFICATION FOR PUBLIC WORKS CONSTRUCTION SHALL BE AT NO COST TO THE CITY.
5. REINFORCED CONCRETE PIPE SHALL BE USED 10-FEET ON EACH SIDE OF ALL CUT-FILL TRANSITION.
6. UPON COMPLETION OF CONSTRUCTION, A REPORT COVERING CONSTRUCTION OF THE PIPE SHALL BE PREPARED AND SUBMITTED TO THE CITY. THE REPORT SHALL INCLUDE A STANDARD VHS VIDEO INSPECTION OF THE PIPE, DAILY LOGS COVERING THE METHOD OF PIPE CONSTRUCTION, A SUMMARY OF THE MATERIAL TESTS, PROBLEMS ENCOUNTER AND DOCUMENTATION OF ALL REPAIRS. APPROVAL OF THE REPORT AND RELEASE OF THE IMPROVEMENT BOND IS CONTINGENT UPON RECEIPT AND APPROVAL OF THE REPORT BY THE CITY.

BENCHMARK: P.K. NAIL & CITY ENGINEER TAG IN SIDEWALK OVER N'LY WALL OF A C.B. ALONG THE E'LY CURB OF TRAUTWEIN RD, 250' S'LY OF THE S'LY DRIVE TO THE ORANGECREST ELECTRICAL SUBSTATION. ELEV=1613.520 (E8-E3)

REGISTERED PROFESSIONAL ENGINEER CRAIG A. COOK No. 23323 Exp. 12/31/05 CIVIL STATE OF CALIFORNIA

CITY BUSINESS TAX CERTIFICATION NO. D12144 EXP. DATE 12-31-04

Underground Service Alert
Call: TOLL FREE
1-800
227-2600
TWO WORKING DAYS BEFORE YOU DIG

MARK	REVISIONS	APPR	DATE

DESIGNED BY WDG DRAWN BY DPD CHECKED BY WDG

CITY OF RIVERSIDE, CALIFORNIA
PUBLIC WORKS DEPARTMENT

APPROVED BY	BY	DATE
PRINCIPAL ENGINEER		4/19/04
STREET SERVICES		4/19/04
TRAFFIC DIVISION		
PARKS DEPARTMENT		

APPROVED BY
CITY ENGINEER
DATE 4/20/04

GABEL, COOK & BECKLUND
CIVIL ENGINEERS · LAND SURVEYORS
LAND PLANNERS
125 West La Cadena Drive, Suite A, Riverside, CA 92501
Telephone (909) 788-8092 Facsimile (909) 788-5184

19APRIL04
DATE: CRAIG A. COOK RCE 23323 EXPIRES 12/31/05

DATE PREPARED: OCTOBER, 2003 | W.O. NO.: 1842

CITY OF RIVERSIDE
TRACT 30508-1 PH-2
STORM DRAIN PLANS
TITLE SHEET

HORIZ. SCALE: AS NOTED

PW03-0406
D-748
SHEET 1 OF 4
FILE NO.

As-Built

INDEXED 6-01-04 GH

JOB FOLDER N:\1842\Land Development\dwg\STORM DRAIN\
DRAWING NAME SD-SHT1.dwg
DATE PRINTED Tuesday , 06 April 2004 04:14pm

STREET PROFILE SCALE:
VERT.: 1" = 4'
HORIZ.: 1" = 40'

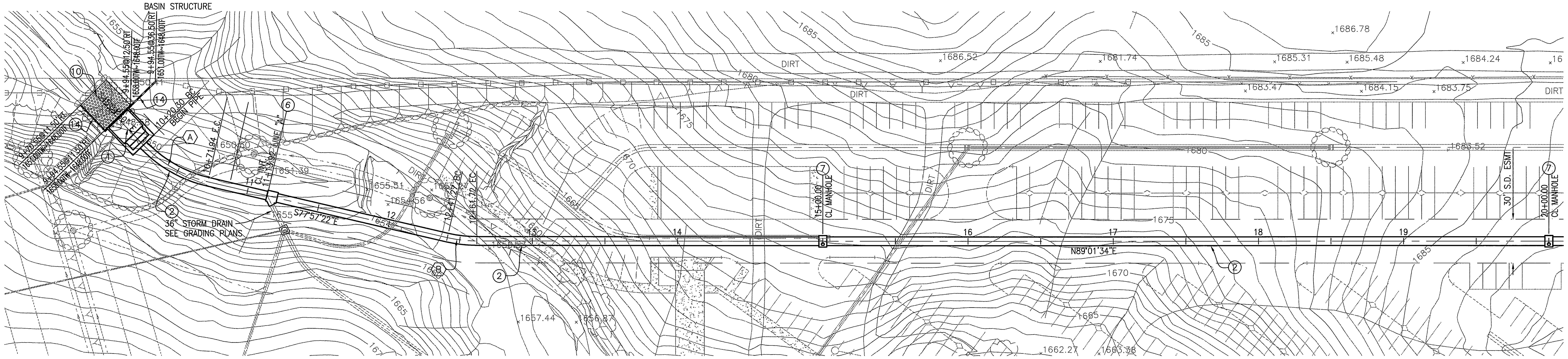

CONSTRUCTION NOTES

1. CONSTRUCT ENERGY DISSIPATOR – IMPACT BASIN WITH VERTICAL BAFFLE WALL, BASIN WIDTH = 18.0' STD. NO. 384, SHEETS 1 THROUGH 8, PER AMERICAN PUBLIC WORKS ASSOCIATION CONSTRUCTION STANDARDS 1999 EDITION AND DETAIL ON SHEET 4.
2. CONSTRUCT 78" R.C.P. (D-LOAD PER PLAN) OR C.I.P.P.
3. CONSTRUCT 48" R.C.P. (D-LOAD PER PLAN) OR C.I.P.P.
4. CONSTRUCT 30" R.C.P. (D-LOAD PER PLAN).
5. CONSTRUCT 18" R.C.P., CLASS IV.
6. CONSTRUCT JUNCTION STRUCTURE B PER CITY STD. NO. 421.
   A=50'; B=36"; C=7.7; D=78"; E'=6.1'; L'=5.8'; EL R=1657.31; EL S=1656.19
7. CONSTRUCT MANHOLE AX PER CITY STD. NO. 430.
8. CONSTRUCT MANHOLE JM PER CITY STD. NO. 432.
   A=30'; B=48"; C'=13.7'; D=78"; E'=13.3'; L'=14.3'; EL R=1669.82; EL S=1669.74.

8A. CONSTRUCT MANHOLE JM PER CITY STD. NO. 432.
   A=30'; B=30"; C'=9.3'; D1=30";D2=48"; E'=9.1'; L'=10.1'; EL R=1672.57; EL S=1671.98

9. CONSTRUCT CONCRETE COLLAR PER CITY STD. NO. 424.
10. CONSTRUCT GROUTED RIP RAP PER PLAN AND DETAILS ON SHEET 4.
11. CONSTRUCT GRATED CATCH BASIN – ALLEY (TRANSVERSE), W, V AND t PER STD. NO. 305-2 SHEET 1 AND 2, PER STANDARD PLANS FOR AMERICAN PUBLIC WORKS ASSOCIATION CONSTRUCTION STANDARDS 1999 EDITION AND DETAIL ON SHEET 4.
12. CONSTRUCT CATCH BASIN PER CITY OF RIVERSIDE STD. DWG. NO. 405 W AND V PER PLAN
13. CONSTRUCT JUNCTION STRUCTURE NO. 4 PER CITY OF RIVERSIDE STD. DWG. NO. 423.
14. CONSTRUCT RETAINING WALL TYPE 5 PER CALTRANS STD DWG B3-7 AND DETAIL ON SHEET 4.

CURVE TABLE

⬡	DELTA	R	L	T
A	32°52'33"	90.00'	51.64'	26.55'
B	13°01'04"	90.00'	20.45'	10.27'

NORTH

80' 40' 0' 40' 80'

BENCHMARK: P.K. NAIL & CITY ENGINEER TAG IN SIDEWALK OVER N'LY WALL OF A C.B. ALONG THE E'LY CURB OF TRAUTWEIN RD, 250' S'LY OF THE S'LY DRIVE TO THE ORANGECREST ELECTRICAL SUBSTATION. ELEV=1613.520 (E8-E3)

LINE "A"

REGISTERED PROFESSIONAL ENGINEER CRAIG A. COOK No. 23323 Exp. 12/31/05 CIVIL STATE OF CALIFORNIA

CITY BUSINESS TAX CERTIFICATION NO. D12144 EXP. DATE 12-31-04

Underground Service Alert
CALL BEFORE YOU DIG
Call: TOLL FREE
1-800
227-2600
TWO WORKING DAYS BEFORE YOU DIG

MARK	REVISIONS	APPR.	DATE

DESIGNED BY WDG DRAWN BY DPD CHECKED BY WDG

CITY OF RIVERSIDE, CALIFORNIA
PUBLIC WORKS DEPARTMENT

APPROVED BY	BY	DATE
PRINCIPAL ENGINEER		4/19/04
STREET SERVICES		4/7/04
TRAFFIC DIVISION		
PARKS DEPARTMENT		

APPROVED BY
CITY ENGINEER
DATE 4/20/04

GABEL, COOK & BECKLUND
CIVIL ENGINEERS · LAND SURVEYORS
LAND PLANNERS
125 West La Cadena Drive, Suite A, Riverside, CA 92501
Telephone (909) 788-8092 Facsimile (909) 788-5184

7APRIL04 Craig A. Cook
DATE: CRAIG A. COOK RCE 23323 EXPIRES 12/31/05

DATE PREPARED: OCTOBER, 2003 | W.O. NO.: 1842

CITY OF RIVERSIDE
TRACT 30508-1 PH-2
STORM DRAIN PLANS
LINE "A"
STA. 10+00.00 TO STA. 20+00.00

HORIZ. SCALE: 1" = 40' VERT. SCALE: 1" = 4'

PW03-0406
D-748
SHEET 2 OF 4
FILE NO.

JOB FOLDER N:\1842\Land Development\dwg\STORM DRAIN\
DRAWING NAME SD-SHT2.dwg
DATE PRINTED Tuesday , 06 April 2004 03:51pm

ASBUILT

INDEXED 6-01-04 GH

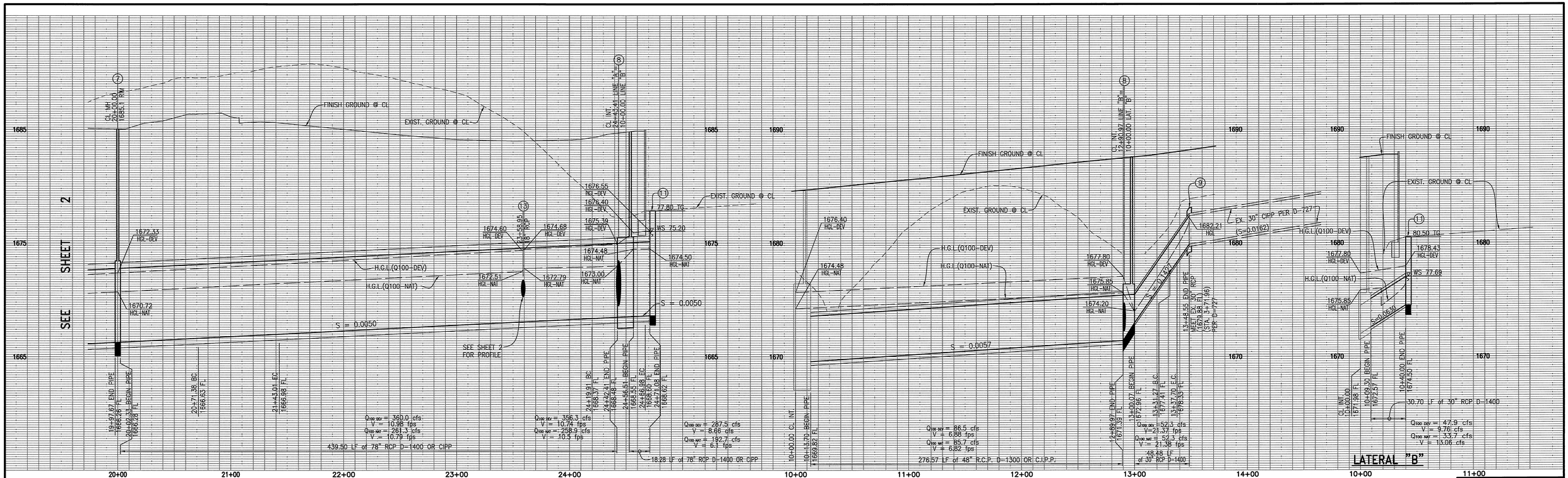

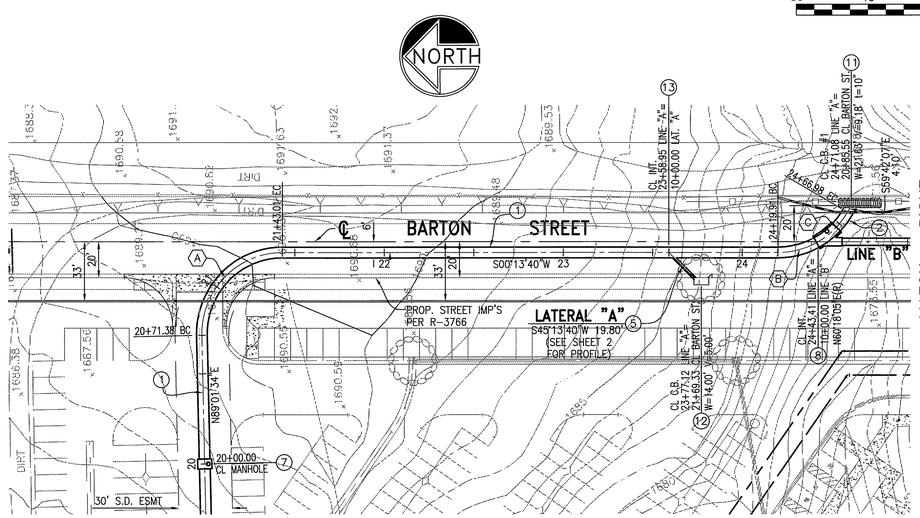

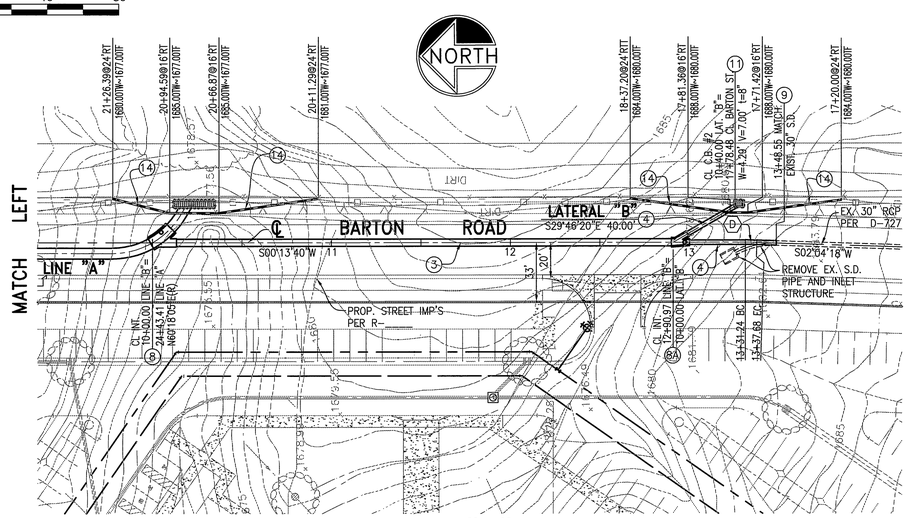

STREET PROFILE SCALE:
VERT.: 1" = 4'
HORIZ.: 1" = 40'

CONSTRUCTION NOTES

1. CONSTRUCT ENERGY DISSIPATOR – IMPACT BASIN WITH VERTICAL BAFFLE WALL, BASIN WIDTH = 18.0' STD. NO. 384, SHEETS 1 THROUGH 8, PER AMERICAN PUBLIC WORKS ASSOCIATION CONSTRUCTION STANDARDS 1999 EDITION AND DETAIL ON SHEET 4.
2. CONSTRUCT 78" R.C.P. (D–LOAD PER PLAN) OR C.I.P.P.
3. CONSTRUCT 48" R.C.P. (D–LOAD PER PLAN) OR C.I.P.P.
4. CONSTRUCT 30" R.C.P. (D–LOAD PER PLAN).
5. CONSTRUCT 18" R.C.P., CLASS IV.
6. CONSTRUCT JUNCTION STRUCTURE B PER CITY STD. NO. 421.
   A=50'; B=36"; C=7.7'; D=78"; E'=6.1'; L'=5.8'; EL R=1657.31; EL S=1656.19
7. CONSTRUCT MANHOLE AX PER CITY STD. NO. 430.
8. CONSTRUCT MANHOLE JM PER CITY STD. NO. 432.
   A=30'; B=48"; C'=13.7'; D=78"; E'=13.3'; L'=14.3'; EL R=1669.82; EL S=1669.74.
8A. CONSTRUCT MANHOLE JM PER CITY STD. NO. 432.
   A=30'; B=30"; C'=9.3'; D1=30",D2=48"; E'=9.1'; L'=10.1'; EL R=1672.57; EL S=1671.98
9. CONSTRUCT CONCRETE COLLAR PER CITY STD. NO. 424.
10. CONSTRUCT GROUTED RIP RAP PER PLAN AND DETAILS ON SHEET 4.
11. CONSTRUCT GRATED CATCH BASIN – ALLEY (TRANSVERSE), W, V AND t PER STD. NO. 305–2 SHEET 1 AND 2, PER STANDARD PLANS FOR AMERICAN PUBLIC WORKS ASSOCIATION CONSTRUCTION STANDARDS 1999 EDITION AND DETAIL ON SHEET 4.
12. CONSTRUCT CATCH BASIN PER CITY OF RIVERSIDE STD. DWG. NO. 405 W AND V PER PLAN
13. CONSTRUCT JUNCTION STRUCTURE NO. 4 PER CITY OF RIVERSIDE STD. DWG. NO. 423.
14. CONSTRUCT RETAINING WALL TYPE 5 PER CALTRANS STD DWG B3–7 AND DETAIL ON SHEET 4.

CURVE TABLE				
⬡	DELTA	R	L	T
A	88°47'54"	45.00'	71.63'	44.07'
B	29°55'35"	45.00'	23.50'	12.03'
C	30°00'12"	45.00'	23.56'	12.06'
D	1°50'38"	200.00'	6.44'	3.22'

REGISTERED PROFESSIONAL ENGINEER CRAIG A. COOK No. 23323 Exp. 12/31/05 CIVIL STATE OF CALIFORNIA

BENCHMARK: P.K. NAIL & CITY ENGINEER TAG IN SIDEWALK OVER N'LY WALL OF A C.B. ALONG THE ELY CURB OF TRAUTWEIN RD, 250' S'LY OF THE S'LY DRIVE TO THE ORANGECREST ELECTRICAL SUBSTATION. ELEV=1613.520 (E8–E3)

CITY BUSINESS TAX CERTIFICATION NO. D12144 EXP. DATE 12–31–04

Underground Service Alert
CALL BEFORE YOU DIG
Call: TOLL FREE
1–800
227–2600
TWO WORKING DAYS BEFORE YOU DIG

MARK	REVISIONS	APPR.	DATE

DESIGNED BY WDG DRAWN BY DPD CHECKED BY WDG

CITY OF RIVERSIDE, CALIFORNIA
PUBLIC WORKS DEPARTMENT

APPROVED BY	BY	DATE
PRINCIPAL ENGINEER		4/16/04
STREET SERVICES		4/17/04
TRAFFIC DIVISION		
PARKS DEPARTMENT		

APPROVED BY
CITY ENGINEER
DATE 4/20/04

GABEL, COOK & BECKLUND
CIVIL ENGINEERS LAND SURVEYORS
LAND PLANNERS
125 West La Cadena Drive, Suite A, Riverside, CA 92501
Telephone (909) 788–8092 Facsimile (909) 788–5184
16APRIL04 Craig A. Cook
DATE: CRAIG A. COOK RCE 23323 EXPIRES 12/31/05

DATE PREPARED: OCTOBER, 2003 W.O. NO.: 1842

CITY OF RIVERSIDE
TRACT 30508–1 PH–2
STORM DRAIN PLANS
LINE "A"
STA. 20+00.00 TO STA. 24+62.01
LINE "B"
STA. 10+00.00 TO STA. 13+48.55

HORIZ. SCALE: 1" = 40' VERT. SCALE: 1" = 4'

PW03–0406
D–748
SHEET 3 OF 4
FILE NO.

INDEXED 6-01-04 GH

JOB FOLDER N:\1842\Land Development\dwg\STORM DRAIN\
DRAWING NAME SD–SHT3.dwg
DATE PRINTED Tuesday , 06 April 2004 03:54pm

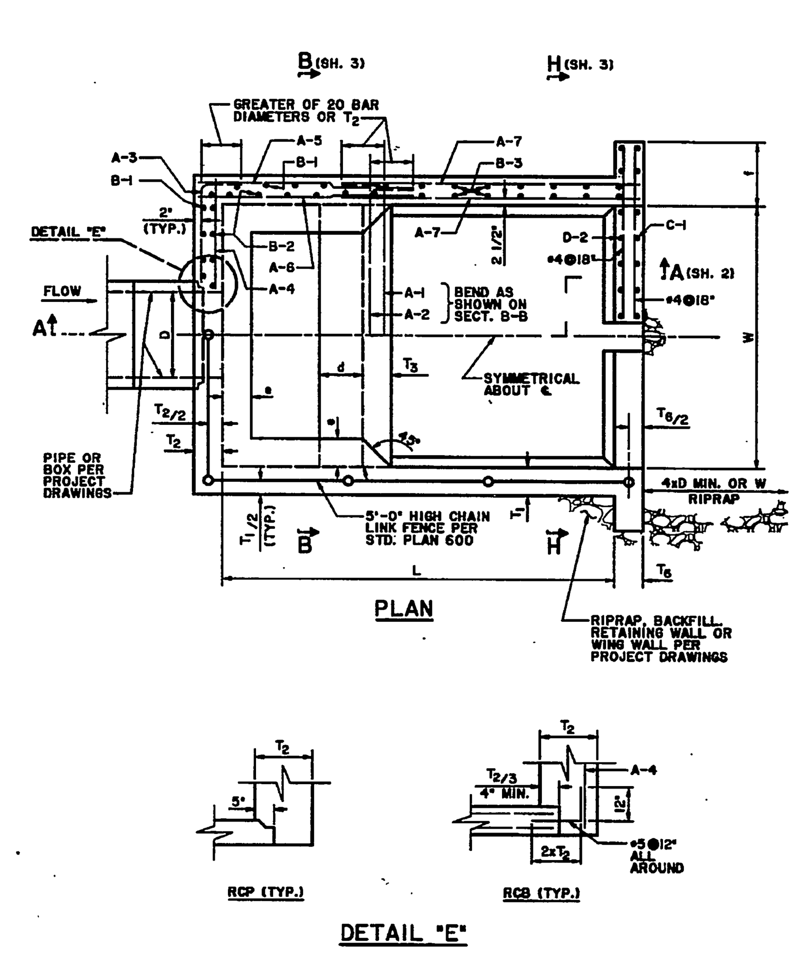

AMERICAN PUBLIC WORKS ASSOCIATION - SOUTHERN CALIFORNIA CHAPTER		
PROMULGATED BY THE PUBLIC WORKS STANDARDS INC., GREENBOOK COMMITTEE 1993 REV. 1998	ENERGY DISSIPATOR - IMPACT BASIN WITH VERTICAL BAFFLE WALL	STANDARD PLAN 384 - 1 SHEET 1 OF 8
	USE WITH STANDARD SPECIFICATIONS FOR PUBLIC WORKS CONSTRUCTION	

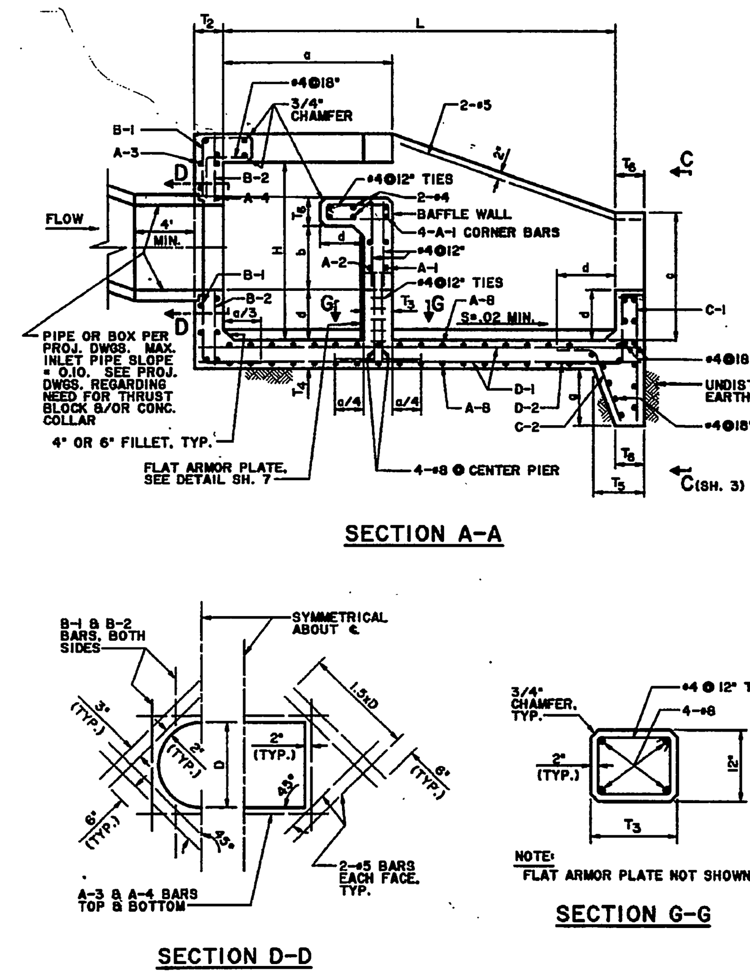

AMERICAN PUBLIC WORKS ASSOCIATION - SOUTHERN CALIFORNIA CHAPTER	
ENERGY DISSIPATOR - IMPACT BASIN WITH VERTICAL BAFFLE WALL	STANDARD PLAN 384 - 1 SHEET 2 OF 8

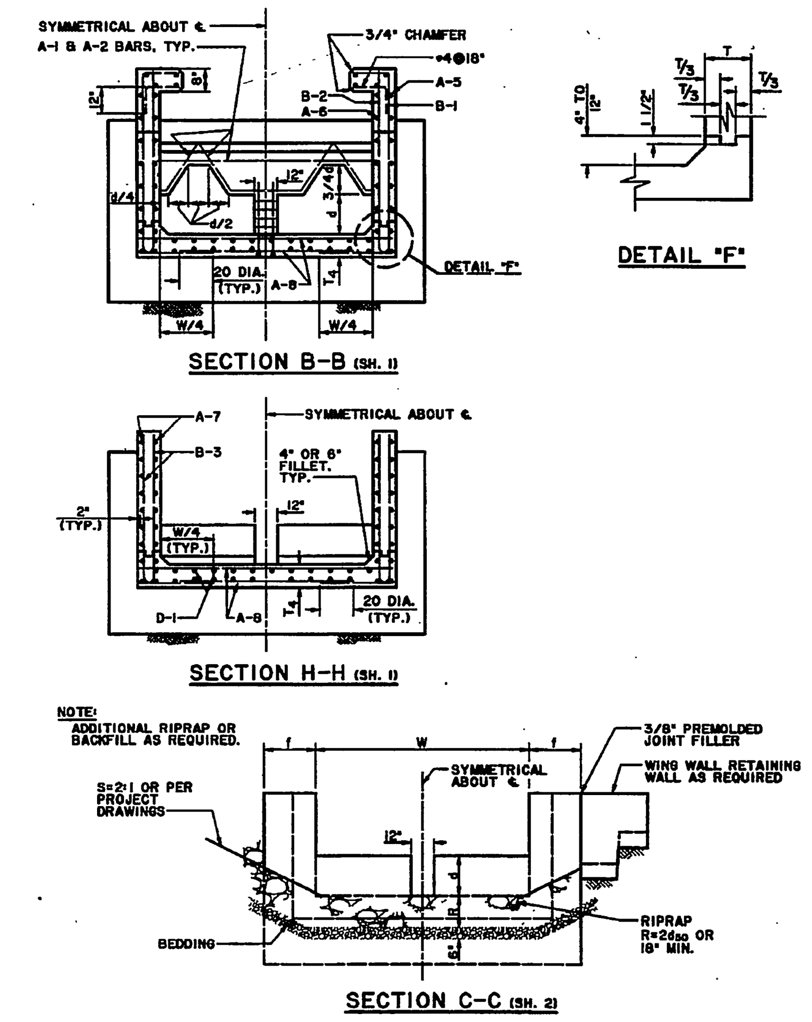

AMERICAN PUBLIC WORKS ASSOCIATION - SOUTHERN CALIFORNIA CHAPTER	
ENERGY DISSIPATOR - IMPACT BASIN WITH VERTICAL BAFFLE WALL	STANDARD PLAN 384 - 1 SHEET 3 OF 8

BASIN WIDTH W=16'

DIMENSIONS		REINFORCING STEEL		
		DESIGNATION	SIZE & SPACING WORKING STRESS	SIZE & SPACING STRENGTH DESIGN
H	12'	A-1	#9@12"	#8@12"
L	21'-6"	A-2	#9@12"	#8@12"
a	8'	A-3	#5@12"	#4@12"
b	6'	A-4	#4@18"	#4@12"
c	8'	A-5	#5@12"	#4@12"
d	2'-8"	A-6	#9@12"	#8@6"
e	1'-4"	A-7	#6@12"	#6@12"
f	3'-6"	A-8	#9@12"	#7@12"
g	6'	B-1	#4@12"	#4@12"
T_1	12"	B-2	#4@12"	#4@12"
T_2	10"	B-3	#6@12"	#6@12"
T_3	13"	C-1	#4@15"	#4@15"
T_4	9.5"	C-2	#4@15"	#4@15"
T_5	10"	D-1	#4@12"	#4@12"
T_6	9"	D-2	#4@18"	#4@18"
DESIGN LOADS		IMPACT = 675 PSF		

BASIN WIDTH W=18'

DIMENSIONS		REINFORCING STEEL		
		DESIGNATION	SIZE & SPACING WORKING STRESS	SIZE & SPACING STRENGTH DESIGN
H	13'-6"	A-1	#10@12"	#9@12"
L	24'	A-2	#7@6"	#6@6"
a	9'	A-3	#5@12"	#5@12"
b	6'-9"	A-4	#4@18"	#4@18"
c	9'	A-5	#5@12"	#5@12"
d	3'	A-6	#8@6"	#9@12"
e	1'-6"	A-7	#5@8"	#5@8"
f	3'-6"	A-8	#8@8"	#8@14"
g	7'	B-1	#4@12"	#4@12"
T_1	13"	B-2	#4@12"	#4@12"
T_2	12"	B-3	#7@16"	#7@16"
T_3	14"	C-1	#4@13"	#4@13"
T_4	10.5"	C-2	#4@13"	#4@13"
T_5	11"	D-1	#4@12"	#4@12"
T_6	9"	D-2	#4@12"	#4@18"
DESIGN LOADS		IMPACT = 750 PSF		

BASIN WIDTH W=20'

DIMENSIONS		REINFORCING STEEL		
		DESIGNATION	SIZE & SPACING WORKING STRESS	SIZE & SPACING STRENGTH DESIGN
H	15'	A-1	#9@6"	#8@8"
L	28'-6"	A-2	#7@6"	#7@8"
a	10'	A-3	#4@6"	#4@8"
b	7'-6"	A-4	#4@12"	#4@16"
c	10'	A-5	#4@12"	#4@8"
d	3'-4"	A-6	#9@6"	#6@4"
e	1'-8"	A-7	#7@14"	#7@14"
f	3'-6"	A-8	#8@7"	#8@12"
g	7'-6"	B-1	#4@12"	#4@12"
T_1	14"	B-2	#4@12"	#4@12"
T_2	12"	B-3	#7@14"	#7@14"
T_3	16"	C-1	#4@13"	#4@13"
T_4	11.5"	C-2	#4@13"	#4@13"
T_5	13"	D-1	#4@12"	#4@12"
T_6	9"	D-2	#6@13"	#5@14"
DESIGN LOADS		IMPACT = 675 PSF		

BASIN WIDTH W=22'

DIMENSIONS		REINFORCING STEEL		
		DESIGNATION	SIZE & SPACING WORKING STRESS	SIZE & SPACING STRENGTH DESIGN
H	16'-6"	A-1	#9@6"	#9@8"
L	29'-6"	A-2	#8@6"	#8@8"
a	11'	A-3	#4@6"	#4@8"
b	8'-3"	A-4	#4@12"	#4@16"
c	11'	A-5	#5@12"	#5@16"
d	3'-8"	A-6	#9@6"	#9@8"
e	1'-10"	A-7	#8@16"	#6@16"
f	4'	A-8	#9@6"	#8@11"
g	8'	B-1	#4@12"	#4@12"
T_1	15"	B-2	#4@12"	#4@12"
T_2	13"	B-3	#8@18"	#8@18"
T_3	17"	C-1	#4@12"	#4@12"
T_4	13"	C-2	#4@12"	#4@12"
T_5	15"	D-1	#4@12"	#4@12"
T_6	9"	D-2	#8@18"	#8@14"
DESIGN LOADS		IMPACT = 750 PSF		

BASIN WIDTH W=24'

DIMENSIONS		REINFORCING STEEL		
		DESIGNATION	SIZE & SPACING WORKING STRESS	SIZE & SPACING STRENGTH DESIGN
H	18'	A-1	#9@6"	#9@8"
L	32'	A-2	#9@6"	#9@8"
a	12'	A-3	#5@6"	#5@8"
b	9'	A-4	#5@12"	#4@16"
c	12'	A-5	#4@6"	#5@8"
d	4'	A-6	#10@6"	#9@6"
e	2'	A-7	#7@12"	#7@12"
f	4'-8"	A-8	#9@7"	#9@12"
g	8'-6"	B-1	#4@12"	#4@12"
T_1	17"	B-2	#4@12"	#4@12"
T_2	13"	B-3	#7@12"	#7@12"
T_3	18"	C-1	#4@12"	#4@12"
T_4	14"	C-2	#4@12"	#4@12"
T_5	17"	D-1	#4@12"	#4@12"
T_6	9"	D-2	#9@18"	#7@14"
DESIGN LOADS		IMPACT = 675 PSF		

BASIN WIDTH W=26'

DIMENSIONS		REINFORCING STEEL		
		DESIGNATION	SIZE & SPACING WORKING STRESS	SIZE & SPACING STRENGTH DESIGN
H	19'-6"	A-1	#8@4"	#10@9"
L	35'	A-2	#9@6"	#9@8"
a	13'	A-3	#6@8"	#8@16"
b	9'-9"	A-4	#6@16"	#5@16"
c	13'	A-5	#8@16"	#5@8"
d	4'-4"	A-6	#9@4"	#8@4"
e	2'-2"	A-7	#6@8"	#6@8"
f	4'-6"	A-8	#9@8"	#8@8"
g	9'-6"	B-1	#4@12"	#4@12"
T_1	18"	B-2	#4@12"	#4@12"
T_2	13"	B-3	#7@12"	#7@12"
T_3	21"	C-1	#5@16"	#5@16"
T_4	15"	C-2	#5@16"	#5@16"
T_5	19"	D-1	#4@12"	#4@12"
T_6	9"	D-2	#8@14"	#7@15"
DESIGN LOADS		IMPACT = 750 PSF		

NOTES:
1. BASIN FULL + IMPACT ON BAFFLE WALL.
2. BASIN FULL + 1/2 IMPACT ON THE OTHER WALLS.
3. STRENGTH DESIGN: LIVE LOAD FACTOR = 1.7, DEAD LOAD FACTOR = 1.4

AMERICAN PUBLIC WORKS ASSOCIATION - SOUTHERN CALIFORNIA CHAPTER	
ENERGY DISSIPATOR - IMPACT BASIN WITH VERTICAL BAFFLE WALL	STANDARD PLAN 384 - 1 SHEET 5 OF 8

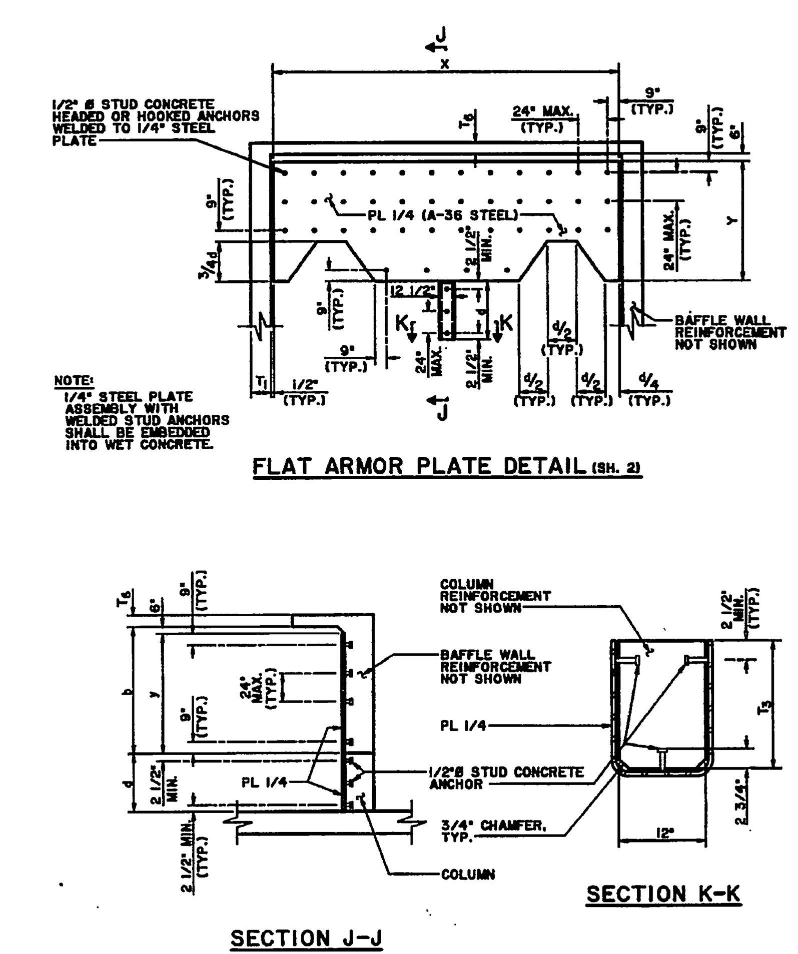

AMERICAN PUBLIC WORKS ASSOCIATION - SOUTHERN CALIFORNIA CHAPTER	
ENERGY DISSIPATOR - IMPACT BASIN WITH VERTICAL BAFFLE WALL	STANDARD PLAN 384 - 1 SHEET 7 OF 8

ARMOR PLATE ANCHOR TABLE

BASIN WIDTH	TOTAL NO. OF BENT PLATE ANCHORS	TOTAL NO. OF FLAT PLATE ANCHORS							PLATE DIMENSIONS	
		ROW 1	ROW 2	ROW 3	ROW 4	ROW 5	ROW 6	ROW 7	X	Y
4'	6	3	3						3'-11"	1'-0"
6'	6	4	4						5'-11"	1'-9"
8'	6	7	5	2					7'-11"	2'-6"
10'	6	9	6	3					9'-11"	3'-3"
12'	6	12	7	2	3				11'-11"	4'-0"
14'	6	14	8	2	4				13'-11"	4'-9"
16'	9	15	9	2	4				15'-11"	5'-6"
18'	9	18	10	2	2	4			17'-11"	6'-3"
20'	9	20	11	2	2	5			19'-11"	7'-0"
22'	9	23	12	2	2	2	5		21'-11"	7'-9"
24'	9	25	13	2	2	2	6		23'-11"	8'-6"
26'	9	26	14	2	2	2	6		25'-11"	9'-3"
28'	12	29	15	2	2	2	2	6	27'-11"	10'-0"
30'	12	31	16	2	2	2	2	7	29'-11"	10'-9"
32'	12	32	17	2	2	2	2	7	31'-11"	11'-6"

AMERICAN PUBLIC WORKS ASSOCIATION - SOUTHERN CALIFORNIA CHAPTER	
ENERGY DISSIPATOR - IMPACT BASIN WITH VERTICAL BAFFLE WALL	STANDARD PLAN 384 - 1 SHEET 8 OF 8

(1) ENERGY DISSIPATOR

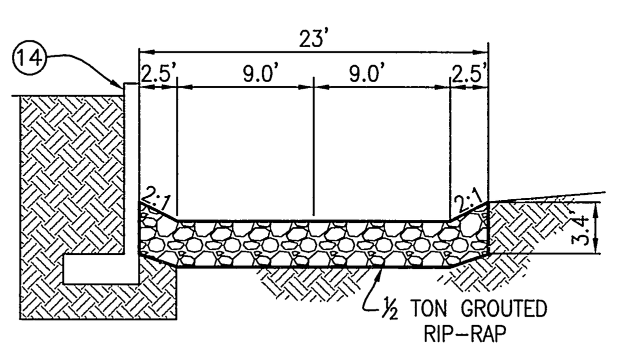

(10) GROUTED RIP-RAP SECTION

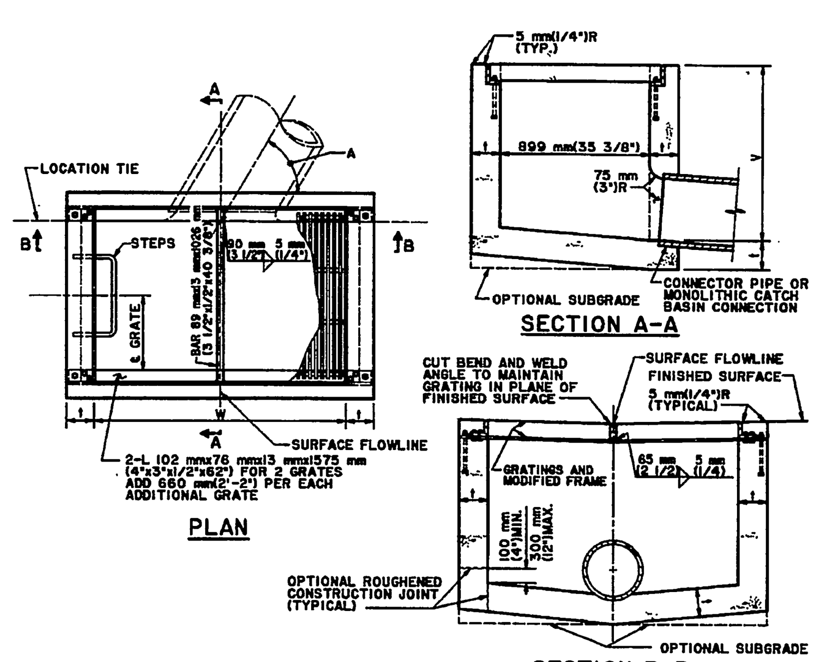

STRUCTURAL DATA

WALL AND SLAB DIMENSIONS AND REINFORCEMENT REQUIREMENTS

NO. OF GRATES	MAX V	t	REINFORCEMENT FOR WALLS AND SLABS
2-3	1.2 m(4')	150 mm(6")	NOT REQUIRED
2-3	2.4 m(8')	200 mm(8")	
2-3	3.0 m(10')	250 mm(10")	
2-3	3.5 m(12')	250 mm(10")	REQUIRED
4-6	1.2 m(4')	150 mm(6")	NOT REQUIRED
4-6	2.0 m(7')	200 mm(8")	
4-6	2.4 m(8')	200 mm(8")	REQUIRED
4-6	3.5 m(12')	250 mm(10")	
7-9	1.2 m(4')	150 mm(6")	NOT REQUIRED
7-9	1.8 m(6')	200 mm(8")	
7-9	2.4 m(8')	200 mm(8")	REQUIRED
7-9	3.5 m(12')	250 mm(10")	
>9	1.2 m(4')	150 mm(6")	
>9	2.4 m(8')	200 mm(8")	
>9	3.5 m(12')	250 mm(10")	

AMERICAN PUBLIC WORKS ASSOCIATION - SOUTHERN CALIFORNIA CHAPTER		
PROMULGATED BY THE PUBLIC WORKS STANDARDS INC., GREENBOOK COMMITTEE 1984 REV. 1996	GRATING CATCH BASIN — ALLEY (TRANSVERSE)	STANDARD PLAN METRIC 305 - 2 SHEET 1 OF 2
	USE WITH STANDARD SPECIFICATIONS FOR PUBLIC WORKS CONSTRUCTION	

NOTES:

1. ALL CURVED CONCRETE SURFACES SHALL BE FORMED BY CURVED FORMS, AND SHALL NOT BE SHAPED BY PLASTERING.
2. TWO GRATINGS ARE REQUIRED UNLESS OTHERWISE SHOWN ON THE PROJECT PLANS.
3. FLOOR OF BASIN SHALL BE GIVEN A STEEL TROWEL FINISH AND SHALL HAVE A LONGITUDINAL AND LATERAL SLOPE OF 1:12 MINIMUM AND 1:3 MAXIMUM. SLOPE FLOOR FROM ALL DIRECTIONS TO THE OUTLET.
4. DIMENSIONS:
   - V = 1.0 m(3'-6")
   - V_1 = THE DEPTH AT THE INVERT OF THE INLET. NOTED ON THE PROJECT PLANS.
   - W = 1308 mm(4'-3 1/2") FOR TWO GRATINGS: ADD 660 mm(2'-2") FOR EACH ADDITIONAL GRATING.
   - A = THE ANGLE, IN DEGREES, INTERCEPTED BY THE CENTERLINE OF THE CONNECTOR PIPE AND THE CATCH BASIN WALL TO WHICH THE CONNECTOR PIPE IS ATTACHED.
5. PLACE CONNECTOR PIPES AS INDICATED ON THE PROJECT PLANS. UNLESS OTHERWISE SPECIFIED, THE CONNECTOR PIPE SHALL BE LOCATED AT THE DOWNSTREAM END OF THE BASIN. WHERE THE CONNECTOR PIPE IS SHOWN AT A CORNER, THE CENTERLINE OF THE PIPE SHALL INTERSECT THE INSIDE CORNER OF THE BASIN. THE PIPE MAY BE CUT AND TRIMMED AT A SKEW NECESSARY TO INSURE MINIMUM 80 mm(3") PIPE EMBEDMENT, ALL AROUND, WITHIN THE CATCH BASIN WALL, AND 75 mm(3") RADIUS OF ROUNDING OF STRUCTURE CONCRETE, ALL AROUND, ADJACENT TO PIPE ENDS. A MONOLITHIC CATCH BASIN CONNECTION SHALL BE USED TO JOIN THE CONNECTOR PIPE TO THE CATCH BASIN WHENEVER ANGLE "A" IS LESS THAN 70 DEGREES OR GREATER THAN 110 DEGREES, OR WHENEVER THE CONNECTOR PIPE IS LOCATED IN A CORNER. THE OPTIONAL USE OF A MONOLITHIC CATCH BASIN CONNECTION IN ANY CASE IS PERMITTED. MONOLITHIC CATCH BASIN CONNECTIONS MAY BE CONSTRUCTED TO AVOID CUTTING STANDARD LENGTHS OF PIPE.
6. STEPS SHALL BE LOCATED AS SHOWN. IF THE CONNECTOR PIPE INTERFERES WITH THE STEPS, THEY SHALL BE LOCATED ON THE OPPOSITE WALL. STEPS SHALL BE SPACED 300 mm(12") APART. THE TOP STEP SHALL BE 175 mm(7") BELOW THE TOP OF THE GRATING AND PROJECT 65 mm (2-1/2"). ALL OTHER STEPS SHALL PROJECT 130 mm(5").
7. THE FOLLOWING STANDARD PLANS ARE INCORPORATED HEREIN:
   - 308 MONOLITHIC CATCH BASIN CONNECTION
   - 309 CATCH BASIN REINFORCEMENT
   - 311 FRAME AND GRATING FOR CATCH BASINS
   - 635 STEEL STEP
   - 636 POLYPROPYLENE PLASTIC STEP
8. DIMENSIONS SHOWN ON THIS PLAN FOR METRIC AND ENGLISH UNITS ARE NOT EXACT EQUAL VALUES. IF METRIC VALUES ARE USED, ALL VALUES USED FOR CONSTRUCTION SHALL BE METRIC VALUES. EXCEPT REINFORCING BARS SIZES IN ENGLISH UNITS MAY BE SUBSTITUTED FOR METRIC BAR SIZES. IF ENGLISH UNITS ARE USED, ALL VALUES USED FOR CONSTRUCTION SHALL BE ENGLISH UNITS.

AMERICAN PUBLIC WORKS ASSOCIATION - SOUTHERN CALIFORNIA CHAPTER	
GRATING CATCH BASIN — ALLEY (TRANSVERSE)	STANDARD PLAN METRIC 305 - 2 SHEET 2 OF 2

(11) GRATED CATCH BASIN

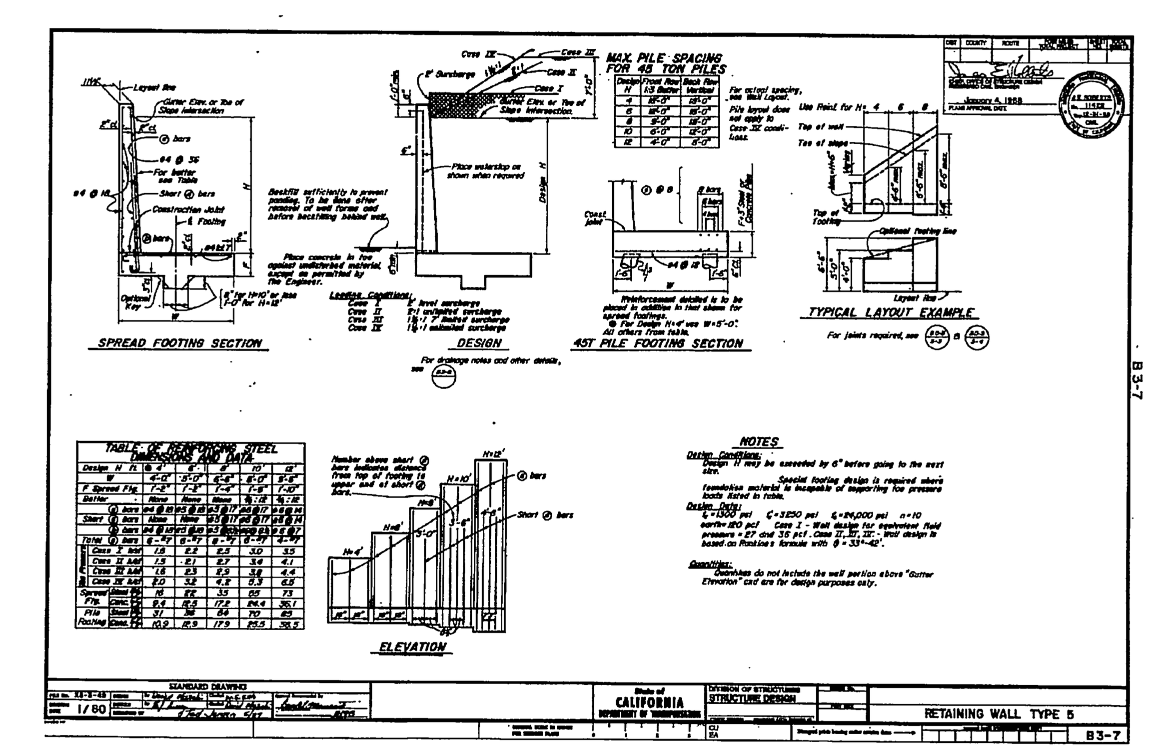

(14) RETAINING WALL

CONSTRUCTION NOTES

(1) CONSTRUCT ENERGY DISSIPATOR – IMPACT BASIN WITH VERTICAL BAFFLE WALL, BASIN WIDTH = 18.0' STD. NO. 384, SHEETS 1 THROUGH 8, PER AMERICAN PUBLIC WORKS ASSOCIATION CONSTRUCTION STANDARDS 1999 EDITION AND DETAIL ON SHEET 4.

(2) CONSTRUCT 78" R.C.P. (D-LOAD PER PLAN) OR C.I.P.P.

(3) CONSTRUCT 48" R.C.P. (D-LOAD PER PLAN) OR C.I.P.P.

(4) CONSTRUCT 30" R.C.P. (D-LOAD PER PLAN).

(5) CONSTRUCT 18" R.C.P., CLASS IV.

(6) CONSTRUCT JUNCTION STRUCTURE B PER CITY STD. NO. 421.
A=50°; B=36"; C=7.7; D=78"; E'=6.1'; L'=5.8'; EL R=1657.31; EL S=1656.19

(7) CONSTRUCT MANHOLE AX PER CITY STD. NO. 430.

(8) CONSTRUCT MANHOLE JM PER CITY STD. NO. 432.
A=30°; B=48"; C'=13.7'; D=78"; E'=13.3'; L'=14.3'; EL R=1669.82; EL S=1669.74.

(8A) CONSTRUCT MANHOLE JM PER CITY STD. NO. 432.
A=30°; B=30"; C'=9.3'; D1=30";D2=48"; E'=9.1'; L'=10.1'; EL R=1672.57; EL S=1671.98

(9) CONSTRUCT CONCRETE COLLAR PER CITY STD. NO. 424.

(10) CONSTRUCT GROUTED RIP RAP PER PLAN AND DETAILS ON SHEET 4.

(11) CONSTRUCT GRATED CATCH BASIN – ALLEY (TRANSVERSE), W, V AND t PER STD. NO. 305-2 SHEET 1 AND 2, PER STANDARD PLANS FOR AMERICAN PUBLIC WORKS ASSOCIATION CONSTRUCTION STANDARDS 1999 EDITION AND DETAIL ON SHEET 4.

(12) CONSTRUCT CATCH BASIN PER CITY OF RIVERSIDE STD. DWG. NO. 405 W AND V PER PLAN

(13) CONSTRUCT JUNCTION STRUCTURE NO. 4 PER CITY OF RIVERSIDE STD. DWG. NO. 423.

(14) CONSTRUCT RETAINING WALL TYPE 5 PER CALTRANS STD DWG B3-7 AND DETAIL ON SHEET 4.

REGISTERED PROFESSIONAL ENGINEER — CRAIG A. COOK — No. 23323 — Exp. 12/31/05 — CIVIL — STATE OF CALIFORNIA

BENCHMARK: P.K. NAIL & CITY ENGINEER TAG IN SIDEWALK OVER N'LY WALL OF A C.B. ALONG THE E'LY CURB OF TRAUTWEIN RD, 250' S'LY OF THE S'LY DRIVE TO THE ORANGECREST ELECTRICAL SUBSTATION. ELEV=1613.520 (E8-E3)

CITY BUSINESS TAX CERTIFICATION NO. D12144 EXP. DATE 12-31-04

Underground Service Alert
Call: TOLL FREE 1-800 227-2600
CALL BEFORE YOU DIG
TWO WORKING DAYS BEFORE YOU DIG

MARK	REVISIONS	APPR.	DATE

DESIGNED BY WDG DRAWN BY DPD CHECKED BY WDG

CITY OF RIVERSIDE, CALIFORNIA PUBLIC WORKS DEPARTMENT

APPROVED BY	BY	DATE
PRINCIPAL ENGINEER	[signature]	4/9/04
STREET SERVICES	[signature]	4/7/04
TRAFFIC DIVISION		
PARKS DEPARTMENT		

APPROVED BY [signature] CITY ENGINEER
DATE 4/20/04

GABEL, COOK & BECKLUND
CIVIL ENGINEERS · LAND SURVEYORS · LAND PLANNERS
125 West La Cadena Drive, Suite A, Riverside, CA 92501
Telephone (909) 788-8092 Facsimile (909) 788-5184
7 APRIL 04 [signature: Craig A. Cook]
DATE: CRAIG A. COOK RCE 23323 EXPIRES 12/31/05
DATE PREPARED: OCTOBER, 2003 W.O. NO.: 1842

CITY OF RIVERSIDE
TRACT 30508-1 PH-2
STORM DRAIN PLANS
DETAIL SHEET
HORIZ. SCALE: AS NOTED

PW03-0406
D-748
SHEET 4 OF 4
FILE NO.

INDEXED 6-01-04 GH

JOB FOLDER N:\1842\Land Development\dwg\STORM DRAIN\
DRAWING NAME SD-SHT4.dwg
DATE PRINTED Tuesday , 06 April 2004 03:56pm