RIVERSIDE CALIFORNIA

PUBLIC WORKS DEPARTMENT

LIME STREET WIDENING

THIRTEENTH STREET TO THIRD STREET

LENGTH OF PROJECT = 3960 Feet = 0.75 Mile

CONSTRUCTION LEGEND

CENTER LINE — ℄
RIGHT-OF-WAY LINE — R/W
SUBDIVISION LOT LINE — ℞
TELEPHONE TO BE INSTALLED DURING STREET CONST. — PROP. T
TOP OF SLOPE
TOE OF SLOPE
DIRECTION OF FLOW
INDICATES EXACT DEPTH UNKNOWN. SEE GEN. CONST. NOTE NO. 8.

SPECIAL CONSTRUCTION NOTES

SECTION LEGEND — SHADING LEGEND

1. CONST. CURB AND GUTTER PER STD. DWG. 200. CURB FACE AS NOTED ON PROFILES.
2. CONST. SIDEWALK PER STD. DWGS. 325-A OR 350-A. REPLACE PRIVATE PCC WALKWAYS WHERE SHOWN ON PLAN. (0.3' THICK PCC.)
3. CONST. DRIVEWAY APPROACH PER STD. DWG. 302. A=10' AND B=17' EXCEPT AS NOTED ON THE PLAN. FINAL LOCATION TO BE DETERMINED IN THE FIELD BY THE ENGINEER. PRIOR TO CONSTRUCTION OF APPROACH, GRADE SHEETS ARE TO BE ISSUED WHERE ELEVS. ARE SHOWN ON THE PLAN, AT THE BACK OF THE DRIVEWAY.
4. (EXIST. AC PCC) REPLACE OR REGRADE DRIVEWAY TO GRADES AS DIRECTED BY THE ENGINEER. MATERIAL AS SHOWN ON THE PLAN.
6. CONST. STRUCTURAL SECTION PER SCHEDULE SHOWN AT RIGHT. NO PRIME COAT REQUIRED. AREAS SHOWN: (6A) AC TO BE 0.55' THICK. TRENCH RESURFACING ON 6TH ST. TO BE (6A)
7. OVERLAY EXIST. PAVEMENT WITH VARIABLE THICKNESS OF ASPHALT CONCRETE.
8. PLACE 0.20' OF ASPHALT CONCRETE OVER NATIVE SOIL (90% RELATIVE COMPACTION.)
10. ADJUST MANHOLE TO GRADE.
11. CONSTRUCT TREE WELL PER STD. DWG. 327.
12. CONST. PCC. CURB WALL PER DETAIL ON SHEET 2.
13. CONST. PCC STEPS PER DETAIL ON SHEET 2.
14. CONST. CROSS GUTTER PER STD. DWG. 220.
15. CONSTRUCT CONCRETE BLOCK RETAINING WALL PER STD. DRAWING 708 AND DETAIL ON PLAN SHEET 3.

(X) II — ENTIRE TREE TO BE REMOVED. CLASS I - 6" TO 18" DIA. CLASS II OVER 18" TO 36" DIA. CLASS III OVER 36" DIA.

INSTALL PARKING METER POSTS PER DETAIL ON PLAN SHEET 2.

STA. — LEAVE 8" DIAM. HOLE IN PROPOSED SIDEWALK FOR STREET SIGNS. CENTER OF HOLE TO BE 2' FROM CURB FACE AT STATIONS SHOWN ON PLAN.

GENERAL CONSTRUCTION NOTES

1. WHERE NEW CONSTRUCTION IS INDICATED:
   (a) CLEAR AND GRUB.
   (b) REMOVE ALL CURB, GUTTER, SIDEWALK, PCC, AND ABANDONED STREET LIGHT BASES AND CONDUIT.
   (c) SCARIFY OR REMOVE ALL AC PAVEMENT EXCEPT WHERE OVERLAY OF EXIST. PAVEMENT IS SHOWN ON PLAN.
2. CURB, GUTTER AND SIDEWALK REMOVAL SHALL BE TO THE NEAREST CONSTRUCTION JOINT AT OR BEYOND LIMITS SHOWN ON PLAN.
3. TRANSITION NEW CONSTRUCTION TO MEET EXIST. FACILITIES AS DIRECTED BY THE INSPECTOR EXCEPT WHERE SHOWN OTHERWISE ON PLAN.
4. SIDE STREETS ARE ASSUMED TO INTERSECT THE CONST. ℄ AT RIGHT ANGLES FOR CURB RETURN CALCULATIONS EXCEPT WHERE OTHERWISE SHOWN.
5. DRAIN PIPES SHALL BE INSTALLED PER STD. 452 AND TYPICAL TRENCH SECTION ON SHEET 2. (BEDDING CASE AS SHOWN ON PLAN)
6. PLACE 3/4" OF OPEN GRADED AC AS SHOWN ON TYPICAL SECTIONS AND AS DIRECTED BY THE ENGINEER.
7. STORM DRAIN PIPE ALTERNATES ARE LISTED IN PIPE ALTERNATES SCHEDULE ON THIS SHEET.
8. EXIST. UTILITIES SHOWN ON THIS PLAN ARE PLOTTED FROM UTILITY RECORDS. LOCATIONS AND DEPTHS ARE APPROXIMATE. THE CONTRACTOR IS REQUIRED TO PROTECT UTILITIES IN THE WORK AREA WHETHER OR NOT SHOWN ON PLAN.
9. SEWER LATERALS, WITHIN 10" OF THE PROPOSED STRUCTURAL SECTION, SHALL BE LOWERED AND/OR ENCASED PER ALTERNATES AND NOTES SHOWN AT RIGHT ON THIS SHEET.
10. ALL TRAFFIC SIGNS IN AREA OF CONSTRUCTION SHALL BE SALVAGED BY THE CONTRACTOR AND TURNED OVER TO THE CITY OF RIVERSIDE TRAFFIC ENGINEERING DEPT. STREET NAME SIGNS SHALL BE RELOCATED BY THE CONTRACTOR WHERE DESIGNATED ON THE PLAN BY: ● AND SHALL BE SET PER STD. 666. IN AREAS OF NEW CONCRETE THEY SHALL BE PLACED IN 8" DIAMETER HOLE LEFT PER STA. ABOVE.
11. THESE PLANS ARE FOR STREET CONSTRUCTION ONLY. STREET LIGHTS AND TRAFFIC SIGNALS SHALL BE CONSTRUCTED FROM THE ATTACHED SUBJECT PLANS.

REFERENCE PLANS

SEE GENERAL NOTE NO. 11.
STREET LIGHT - L-5-4732
TRAFFIC SIGNAL - X-140, X-141, X-500-SHEET 6

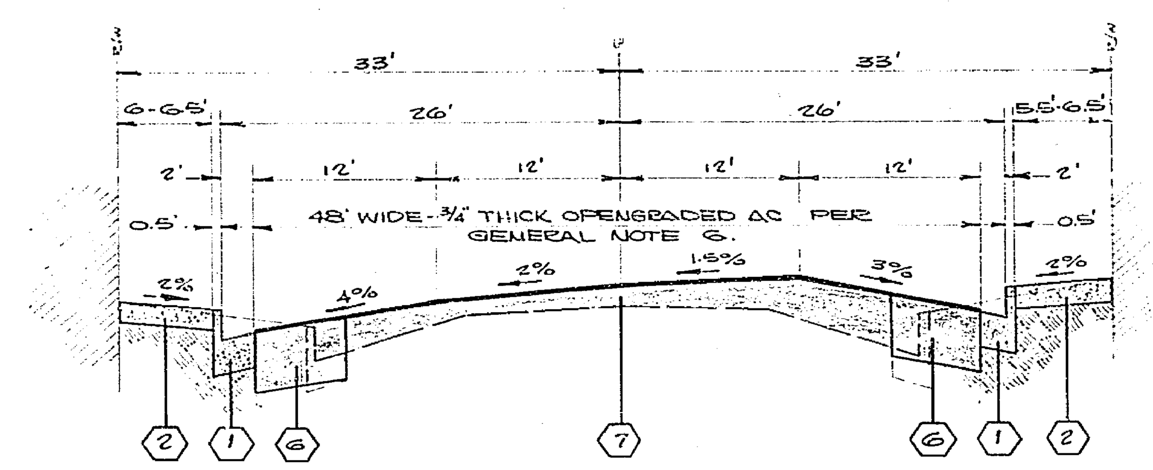

STA. 81+15 RT. & 83+69.48 LT. TO 87+98.94

WHERE OPEN GRADED MEETS EDGE OF GUTTER, KEEP AC PAVING 3/4" BELOW GUTTER LIP TO AVOID A HIGH EDGE OF OPEN GRADED AC.

SLOPES SHOWN ARE TYPICAL. GRADE SHEETS FOR FINAL ELEVATIONS ARE TO BE ISSUED AT TIME OF CONSTRUCTION.

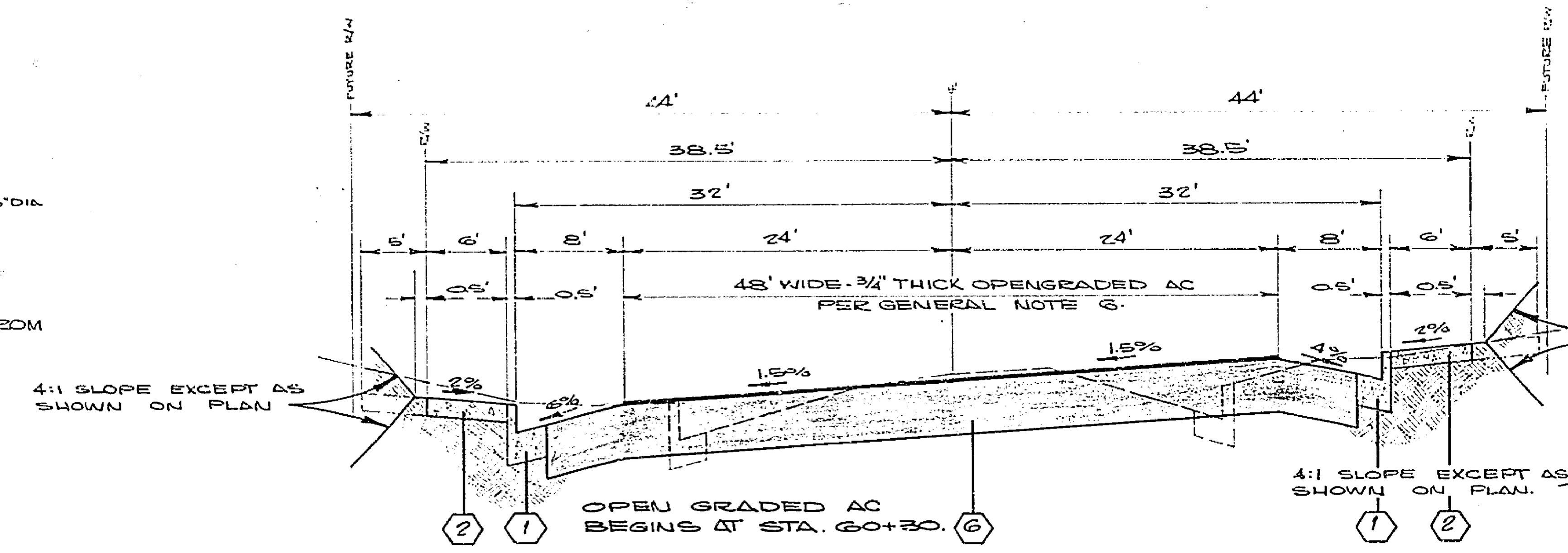

STA. 63+75 TO 80+85 RT. & TO 83+69.48 LT. AND 87+98.94 TO 103+37.87

TYPICAL SECTIONS

NO SCALE

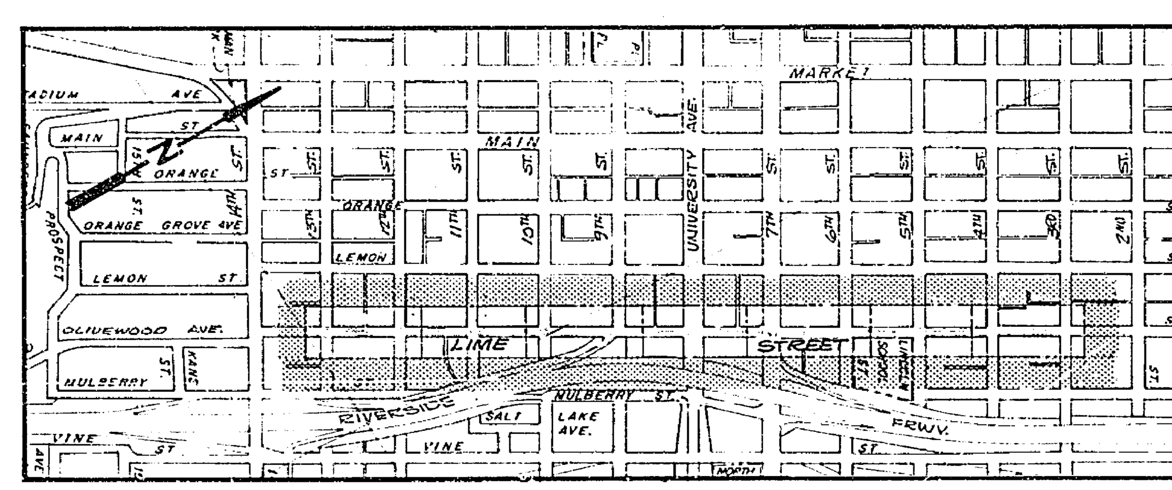

PROJECT LOCATION MAP

SCALE 1" = 800'

EXISTING CULTURE & UNDERGROUND LEGEND

EXISTING UNDERGROUND UTILITIES

SANITARY SEWER — 8"VCP-S
WATER LINE — 6"CI-W
STORM DRAIN — 24"RCP-SD
CULVERT — 15"CONC-C
IRRIGATION LINE — 20"-IRR
GAS LINE — 3"M-G
TELEPHONE CONDUIT — T
ELECTRICAL CONDUIT — E
STREET LIGHTING — SL
TRAFFIC SIGNAL — SIG
FIRE ALARM — F

EXISTING TOPOGRAPHY

BLOCK WALL
BOARD FENCE
WIRE FENCE
CHAIN LINK FENCE
TOP OF SLOPE
TOE OF SLOPE
DIRECTION OF FLOW

(S) SANITARY SEWER MH
SANITARY SEWER CLEANOUT
(D) STORM DRAIN MH
(I) IRRIGATION WEIR
(W) WATER MH
(G) GAS MH
(E) ELECTRIC MH
(T) TELEPHONE MH OR VAULT
POWER POLE
GUY POLE
POLE & GUY ANCHOR
PB PULL BOX
TRAFFIC SIGN
PARKING METER
FIRE ALARM BOX
STREET NAME SIGN
RAILROAD TRACKS
RAILROAD SIGN
RAILROAD SIGNAL
STREET LIGHT (UPRIGHT)
STREET LIGHT
TRAFFIC SIGNAL
TRAFFIC SIGNAL ON MAST ARM
TRAFFIC CONTROL BOX
TRAFFIC SIGNAL DETECTOR
P.C. PEDESTRIAN CONTROL FOR TRAFFIC SIGNAL
PULL BOX - SIG. OR SL
WATER METER
FIRE HYDRANT
SPRINKLER HEAD
VALVE
HYDRANT OR FAUCET
GAS METER
MAIL BOX
(H) FIRE HYDRANT RELOCATED BY OTHERS PRIOR TO STREET CONST.
CONCRETE
ASPHALT
EDGE OF PAVEMENT
BUILDING
UNDERGROUND OR OVERHANGING STRUCTURE
TREE SHOWING DIAMETER IN INCHES
PALM SHOWING DIAMETER IN INCHES
SHRUBBERY
TREE STUMP DIAMETER IN INCHES

CONFLICTING SEWER LATERALS

NOTES:

1. EXACT LIMITS OF LOWERING AND/OR ENCASING SHALL BE DETERMINED BY THE INSPECTOR AT TIME OF CONSTRUCTION
2. THE CONTRACTOR SHALL EXPOSE EXIST. LATERALS AND OTHER UTILITIES AS NECESSARY FOR THE INSPECTOR TO DETERMINE THE LIMITS AND GRADE OF LOWERING AND/OR ENCASEMENT.

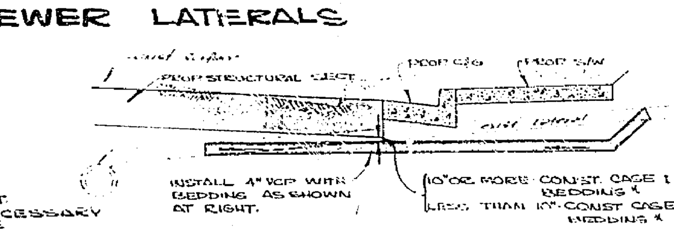

ALTERNATE 1 - LOWER LATERAL

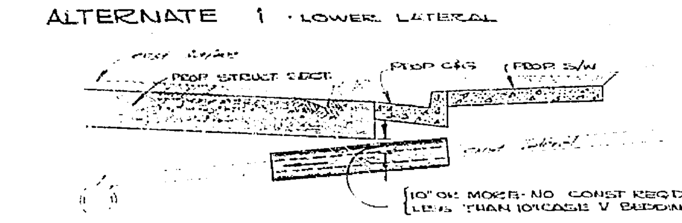

* BEDDING PER STD. 452

ALTERNATE 2 - ENCASE EXIST. LATERAL

NO SCALE

PIPE ALTERNATE SCHEDULE

SIZE	TYPE	STRENGTH CLASS
24"	CP ACP	2000-D CLASS 3300
21"	CP ACP	2000-D CLASS 2400
15"	CP ACP	2000-D CLASS 1500
8" CASE I	CP ACP	EXTRA STRENGTH CLASS 1500
8" CASE III	CP ACP	EXTRA STRENGTH CLASS 2400

* USED ALL ACP

WHERE CP IS SPECIFIED ON THE PLAN ACP MAY BE SUBSTITUTED PER THIS SCHEDULE.

STRUCTURAL SECTION SCHEDULE

90% RELATIVE COMPACTION IN TOP 6" OF NATIVE SOIL. ALL SECTIONS

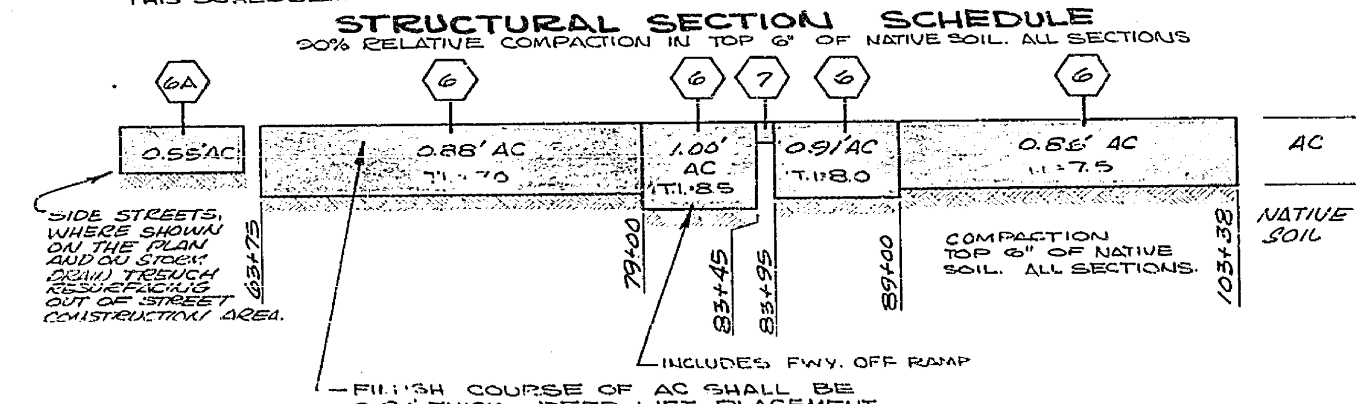

* AS BUILT 12-27-71 BDM

CITY OF RIVERSIDE, CALIFORNIA DEPARTMENT OF PUBLIC WORKS	LIME STREET WIDENING THIRTEENTH ST. TO THIRD ST.	PROJECT NO. 334
APPROVED BY — BY — DATE OFFICE ENGINEER — [signature] — 2-17 PARK DEPARTMENT — [signature] — 2-16 TRAFFIC DIVISION — [signature] — 2-16 ASSISTANT CITY ENG. — [signature] — 2-19	APPROVED BY [signature] DIRECTOR OF PUBLIC WORKS DATE 2-19-71	R-1263
DESIGNED BY BE — DRAWN BY [initials] — CHECKED BY BVG		SHEET 1 OF 8 FILE NO.

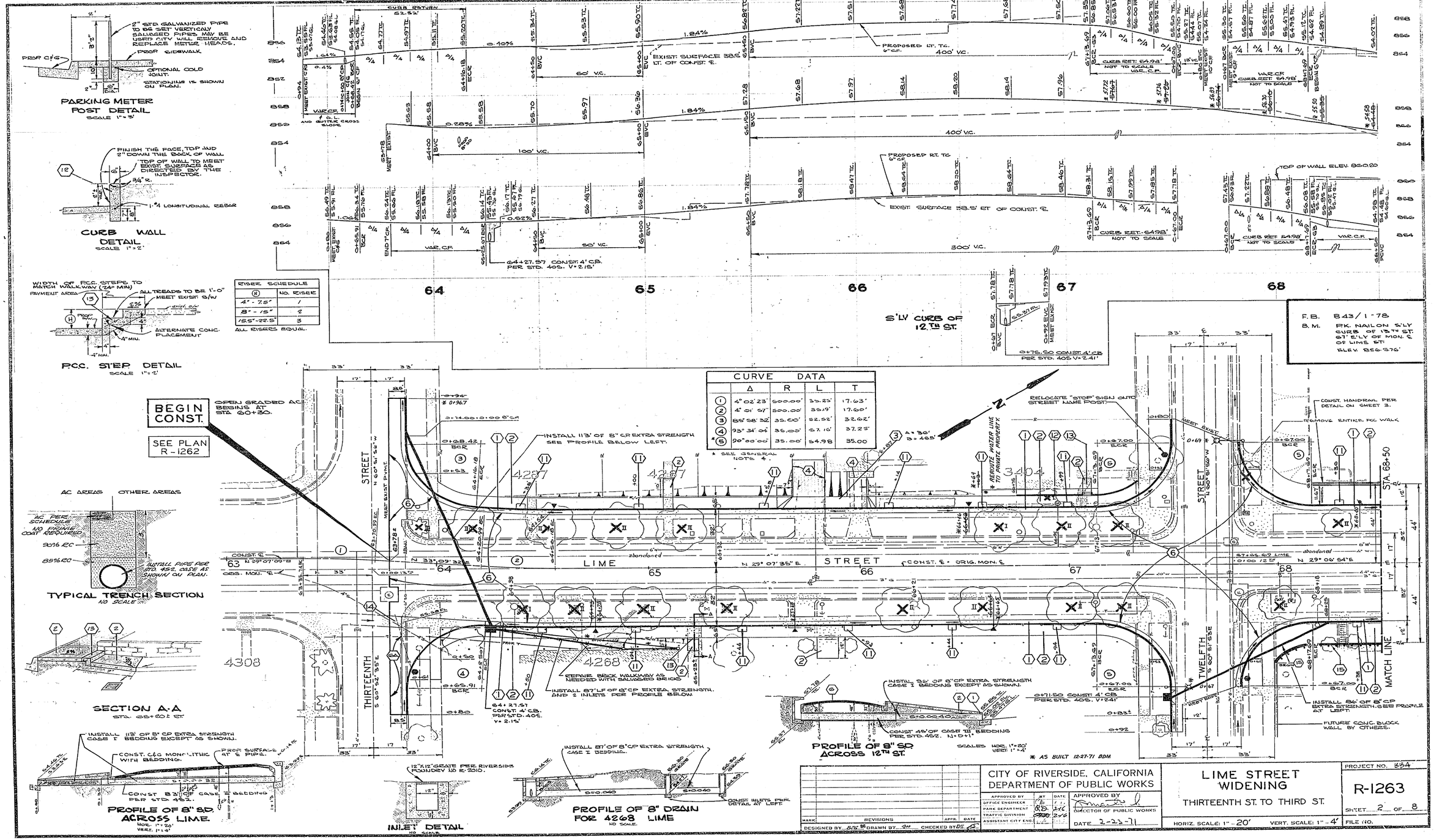

RISER SCHEDULE	
(H)	NO. RISER
4" - 7.5"	1
8" - 15"	2
15.5" - 22.5"	3

ALL RISERS EQUAL.

CURVE DATA				
	Δ	R	L	T
1	4° 02' 23"	500.00'	35.25'	17.63'
2	4° 01' 57"	500.00'	35.19'	17.60'
3	85° 58' 32"	35.00'	52.52'	32.62'
4	93° 34' 04"	35.00'	57.16'	37.25'
*5	90° 00' 00"	35.00'	54.98	35.00

* SEE GENERAL NOTE 4.

CITY OF RIVERSIDE, CALIFORNIA
DEPARTMENT OF PUBLIC WORKS

APPROVED BY	BY	DATE
OFFICE ENGINEER		
PARK DEPARTMENT		
TRAFFIC DIVISION		
ASSISTANT CITY ENG.		

APPROVED BY
DIRECTOR OF PUBLIC WORKS
DATE 2-23-71

LIME STREET WIDENING
THIRTEENTH ST. TO THIRD ST.

HORIZ. SCALE: 1" = 20' VERT. SCALE: 1" = 4'

PROJECT NO. 334
R-1263
SHEET 2 OF 8
FILE NO.

DESIGNED BY BE DRAWN BY CHECKED BY BE

F.B. 843/1-78

B.M. PK. NAIL ON S'LY CURB OF 13TH ST. 60' E'LY OF MON. ℄ OF LIME ST.

ELEV. 858.576'

CURVE DATA				
	Δ	R	L	T
⑥	87°18'48"	27.00'	41.14'	25.76'
⑦	90°00'00"	27.00'	42.41'	27.00'
⑧	15°21'33"	84.00'	22.52'	11.33'

TOP OF EXIST. WALL 44.4' LEFT

TOP OF EXIST. WALL 45' TO 49' LEFT

EXIST. SURFACE 44' LEFT

INSTALL 112'± OF 15" CP 2000 D. CASE I BEDDING PER STD. 452.

7+15.15 CONST. 4' CB PER STD. 405. V= 4.00'

EXIST. SURFACE 38.5' LT.

PROP CONST. & GRADE.

PROPOSED LT. T.C. 5" C.P.

EXIST. SURFACE AT CONST. ℄

APPROX. TOP OF RETAINING WALL

EXIST. WALL

APPROX. TOP OF WALL

PROPOSED RT. T.C. 5" C.P.

EXIST. SUEFACE 38.5' RT.

TOP OF WALL ELEV. 860.20

EXIST. SURFACE AT CONST. ℄

STEP TO MEET EXIST. WALL

TOP OF EXIST. WALL 44' RT.

EXIST. SURFACE 44' RT.

CURB RET. 41.14' NOT TO SCALE

CURB RETURN A24

VAR. C.F.

CONST. HANDRAIL PER DETAIL BELOW

SECTION A-A

STA. 68+17 TO 69+29 LT.

NO SCALE

CONST. HANDRAIL PER DETAIL BELOW

OVERLAY EXIST. FIL. 0.2'

CO. WATER VALVE

STA. 69+75 TO 70+17 FILL WITH NATIVE MATERIAL AND GRADE AREA TO SLOPE TO STREET.

INSTALL 112'± OF 15" CP 2000 D. SEE PROFILE ABOVE.

MEET EXIST. BLOCKOUT WITH 12" THICK CONC. COLLAR

71+13.00 EC 15° CP

71+13.00 CONST 4' CB PER STD. 405. V= 4.00'

71+12.75 CONST. JOIN CB.

71+16.75 CONST. 8' CB PER STD. 405. V= 4.00'

71+21.25 BC

71+21.25 CONST. 4' CB PER STD. 405. V= 4.00'

CAUTION — PACIFIC TELEPHONE CABLES UNDERGROUND

HALL OF RECORDS BLDG.

CONST. ℄ = ORIG. MON. ℄

N 29°06'54"E

N 30°50'00"E

N 29°06.54'E

N 29°07'32"E

LIME STREET

CONST. ℄

ORIG. MON. ℄

MATCH LINE

STA. 68+50

STA. 74+75

PLUG EXIST. 8" VCP ROUNDDRAIN WITH RCC MORTAR.

CONST. DRAIN INLET PER DETAIL BELOW. SEE DETAIL AT RT.

CONST. HAND RAIL PER DETAIL BELOW

THICKEN S/W AS NEEDED TO MEET TOP OF EXIST. WALL.

STEP DOWN ⑮ 11 EQUAL STEPS TO MEET EXIST. WALL.

* TO MEET EXIST. OPENING.

INSTALL 95'± OF 21" CP 2000D. SEE PROFILE ABOVE.

SLOPE TO MEET EXIST. PVMT.

MEET EXIST. SURFACE AS DIRECTED BY THE INSPECTOR.

CONST. RETAINING WALL PER STD. 708. INSTALL REBAR FOR A 5' HIGH WALL.

CONST 63'± OF RETAINING WALL PER STD. 708. SEE DETAIL AT LEFT.

CONTRACTOR TO PROTECT EXIST. RESIDENCE DURING CONSTRUCTION.

* DELETED DIM

* SHORTENED CONCRETE WALL 2' TO INCREASE DIM OPENING.

REMOVE GARAGE AND GRADE AS DIRECTED BY THE INSPECTOR.

* AS BUILT 12-27-71 DOM

RETAINING WALL DETAIL

STA. 75+70 TO STA. 74+05 RT

SCALE 1"=4'

BLOCK COLOR, JOINTS AND MORTAR CAP TO MATCH EXIST. 5' WALL AT STA. 69+75 RIGHT BACK OF WALL TO BE FINISHED THE SAME AS THE FRONT FOR THE TOP 4'.

CONST. 14"x14" CONC. BOX AND PLACE 6"x6" TIMBER AND GRATE FREE RINSE OR APPROVED EQUAL.

USE SPEED RAIL FITTINGS OR OTHER NONCORRODIBLE FITTINGS

CONST. WALL PER STD. 708

PLACE 2'-4" TRANSITE PIPES AS DIRECTED.

RETAINING WALL DETAIL

NO SCALE

HANDRAIL DETAIL

RT. STA. 69+68 TO 71+29

LT. STA. 68+17 TO 69+29

SCALE 1"=3'

STAIRWAY DETAIL

STAIRWAY ℄ 69+88.36

SCALE 1"=10'

MARK	REVISIONS	APPR.	DATE

DESIGNED BY BJG DRAWN BY TW CHECKED BY JE ES

CITY OF RIVERSIDE, CALIFORNIA
DEPARTMENT OF PUBLIC WORKS

APPROVED BY	BY	DATE
OFFICE ENGINEER	VL	
PARK DEPARTMENT	PD	2-16
TRAFFIC DIVISION	TRD	2-16
ASSISTANT CITY ENG.		2-19

APPROVED BY
DIRECTOR OF PUBLIC WORKS

DATE 2-23-71

LIME STREET WIDENING

THIRTEENTH ST. TO THIRD ST.

HORIZ. SCALE: 1" = 20' VERT. SCALE: 1" = 4'

PROJECT NO. 334

R-1263

SHEET 3 OF 8

FILE NO.

F.B. 843/ 1-78
B.M. STEEL PIN IN W'LY CURB OF LIME ST. 60'± N'LY OF ℄ UNIVERSITY AVE.
ELEV. 859.862'

—CAUTION—
PACIFIC TELEPHONE
CABLES UNDERGROUND
BEFORE EXCAVATING
CALL COLLECT:
7:30 A.M. to 5 P.M. | After Hours & Holidays
Orange County ..... 714-633-0011 | 714-547-6606
Riverside County ..... 714-682-0071 | 714-547-6606
FOR FREE CABLE LOCATING SERVICE

NINTH ST. ON RAMP
394 EAST T.C. PROFILE

NINTH STREET ON RAMP
LAYOUT LINE PROFILE ℄

CURVE DATA

	Δ	R	L	T		Δ	R	L	T
9	90°00'00"	35.00'	54.98'	35.00'	14	24°05'33"	200.00'	84.10'	42.68'
10	4° 02' 17"	500.00'	35.24'	17.63'	15	16° 52' 50"	600.00'	166.30'	83.69'
11	4° 02' 02"	500.00'	35.20'	17.61'	16	136° 09' 41"	10.00'	23.76'	24.85'
12	17°08' 45"	120.00'	35.91'	18.09'	17	43° 11' 46"	37.00'	27.89'	14.65'
13	107°24' 57"	30.00'	56.24'	40.85'	18	36°02'27"	27.00'	40.65'	25.20'
					19	90°00'00"	27.00'	42.41'	27.00'

FORKING LOT PLANTER DETAIL
SCALE 1" = 2'

* 12' CURB TRANSITION PER STD 210.

* REMOVE SPRINKLER HEADS AND PIPES AS DIRECTED BY THE INSPECTOR. PIPES MAY BE LAID ON THE SURFACE. CONTACT DIVISION OF HIGHWAYS MAINTENANCE OFFICE (TEL. 686-3646) 7 DAYS PRIOR TO SPRINKLER REMOVAL

SECTION A-A

* AS BUILT 12-28-71 BDM

MARK	REVISIONS	APPR.	DATE

DESIGNED BY BJG DRAWN BY RJ CHECKED BY BE

CITY OF RIVERSIDE, CALIFORNIA
DEPARTMENT OF PUBLIC WORKS

	BY	DATE
APPROVED BY		
OFFICE ENGINEER	M	2-4
PARK DEPARTMENT	RD	2-4
TRAFFIC DIVISION		2-4
ASSISTANT CITY ENG.		2-4

ADDENDUM BY
DIRECTOR OF PUBLIC WORKS
DATE 2-1

LIME STREET WIDENING
THIRTEENTH ST. TO THIRD ST.

PROJECT NO. 334
R-1263
SHEET 4 OF 8
FILE NO.

HORIZ. SCALE: 1" = 20' VERT. SCALE: 1" = 4'

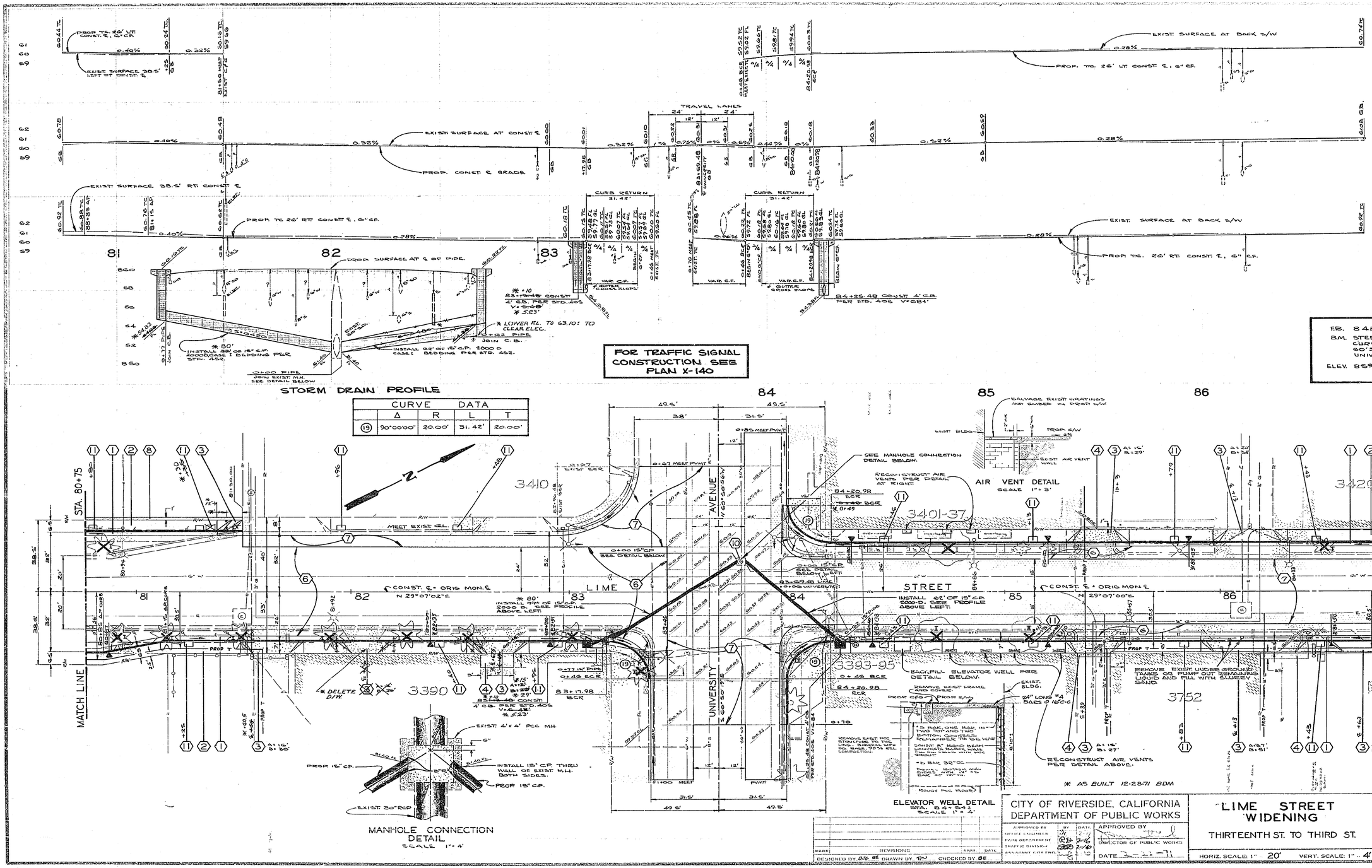

CURVE DATA				
	Δ	R	L	T
19	90°00'00"	20.00'	31.42'	20.00'

CITY OF RIVERSIDE, CALIFORNIA
DEPARTMENT OF PUBLIC WORKS

APPROVED BY
OFFICE ENGINEER
PARK DEPARTMENT
TRAFFIC DIVISION
ASSISTANT CITY ENG.

APPROVED BY
DIRECTOR OF PUBLIC WORKS
DATE 2-22-71

MARK | REVISIONS | APPR. | DATE

DESIGNED BY BE DRAWN BY TW CHECKED BY BE

LIME STREET WIDENING

THIRTEENTH ST. TO THIRD ST.

HORIZ. SCALE: 1" = 20' VERT. SCALE: 1" = 4'

PROJECT NO. 334

R-1263

SHEET 5 OF 8

FILE NO.

FLAG POLE DETAIL
SCALE 1"=4'

FOR TRAFFIC SIGNAL CONSTRUCTION SEE PLAN X-141

VCP INLET DETAIL
NO SCALE
STA. 0+52 N'LY
STA. 0+78 N'LY

STORM DRAIN PLAN
SIXTH STREET
SCALE HOR. 1"=40' VERT. 1"=8'

CURVE DATA				
	Δ	R	L	T
A	90°00'00"	30.00	47.12'	30.00
21	6°55'27"	277.00	33.06'	16.67'
24	5°17'16"	500.00	28.68'	14.34'
23	3°16'26"	500.00	28.57'	14.29'
24	90°00'00"	35.00'	54.98'	35.00'
25	86°45'06"	27.00'	37.09'	25.51'
26	93°15'09"	35.00'	56.96'	37.04'
29	90°00'00"	27.00'	42.41'	27.00'

—CAUTION—
PACIFIC TELEPHONE
CABLES UNDERGROUND
BEFORE EXCAVATING
CALL COLLECT:
7:30 A.M. to 5 P.M. | After Hours & Holidays
Orange County ..... 714-633-0611 | 714-547-6606
Riverside County ..... 714-684-0071 | 714-547-6606
FOR FREE CABLE LOCATING SERVICE

FD. B43/1-78 B49/1-19
B.M. STEEL PIN IN W'LY CURB OF LIME ST. 60'± N'LY OF E. UNIVERSITY AVE.
ELEV. 859.862'

CITY OF RIVERSIDE, CALIFORNIA
DEPARTMENT OF PUBLIC WORKS

APPROVED BY	BY	DATE
OFFICE ENGINEER		
PARK DEPARTMENT		
TRAFFIC DIVISION		
ASSISTANT CITY ENG.		

APPROVED BY ... DIRECTOR OF PUBLIC WORKS
DATE 2-22-71

REVISIONS | MARK | APPR. | DATE
DESIGNED BY BTC DRAWN BY JW CHECKED BY BE

LIME STREET WIDENING
THIRTEENTH ST. TO THIRD ST.

HORIZ. SCALE: 1" 20' VERT. SCALE: 1" 4'

PROJECT NO. 334
R-1263
SHEET 6 OF 8
FILE NO.

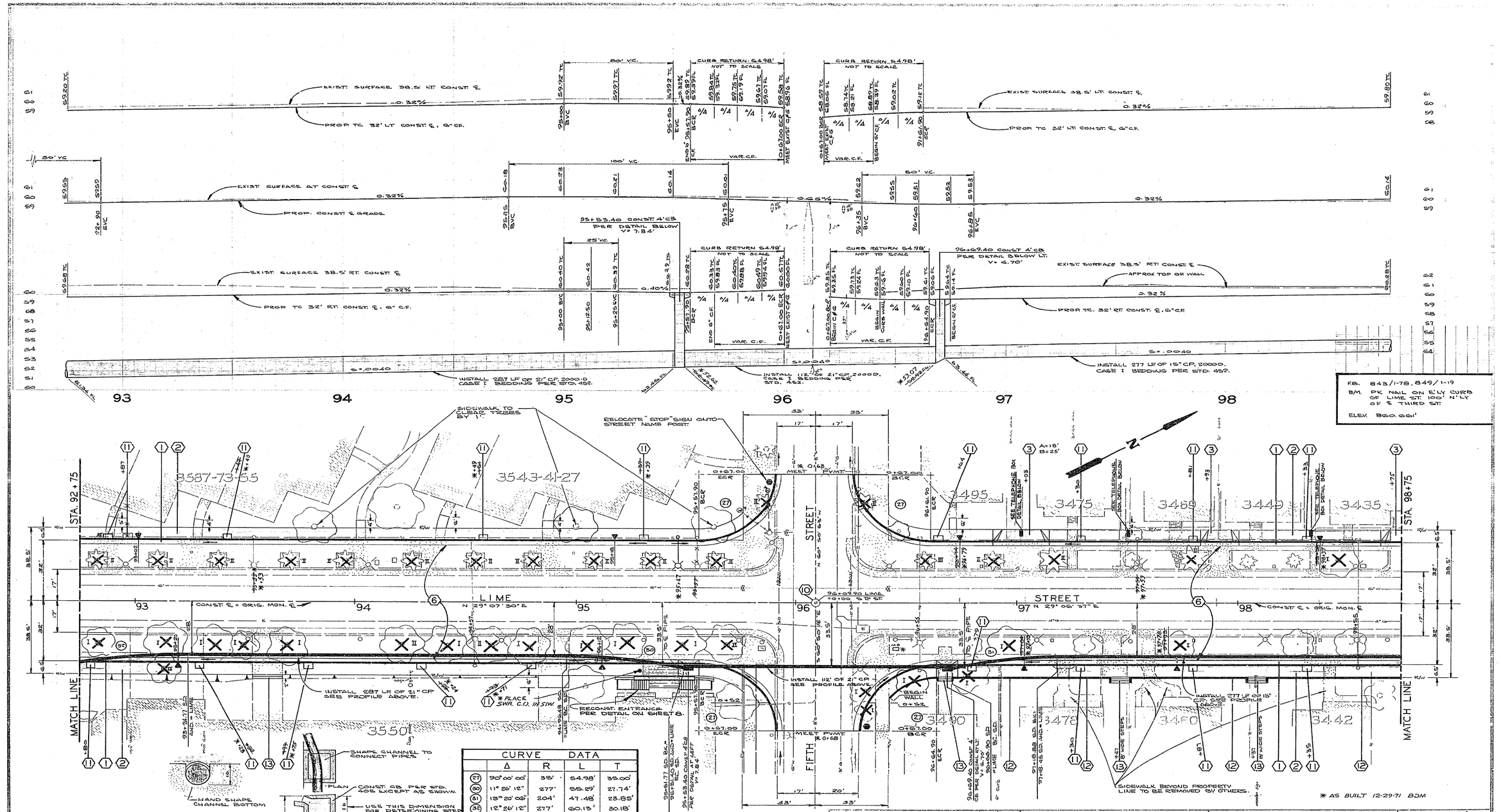

CURVE DATA				
	Δ	R	L	T
27	90° 00' 00"	35'	54.98'	35.00'
30	11° 26' 12"	277'	55.29'	27.74'
31	13° 20' 06"	204'	47.48'	23.85'
32	12° 26' 12"	277'	60.13'	30.18'

CITY OF RIVERSIDE, CALIFORNIA
DEPARTMENT OF PUBLIC WORKS

APPROVED BY
OFFICE ENGINEER
PARK DEPARTMENT
TRAFFIC DIVISION
ASSISTANT CITY ENG.
APPROVED BY
DIRECTOR OF PUBLIC WORKS
DATE 2-23-71

MARK | REVISIONS | APPR. | DATE

DESIGNED BY BJG DRAWN BY CHECKED BY BE

LIME STREET WIDENING

THIRTEENTH ST. TO THIRD ST.

HORIZ. SCALE: 1" = 20' VERT. SCALE: 1" = 4'

PROJECT NO. 334

R-1263

SHEET 7 OF 8

FILE NO.

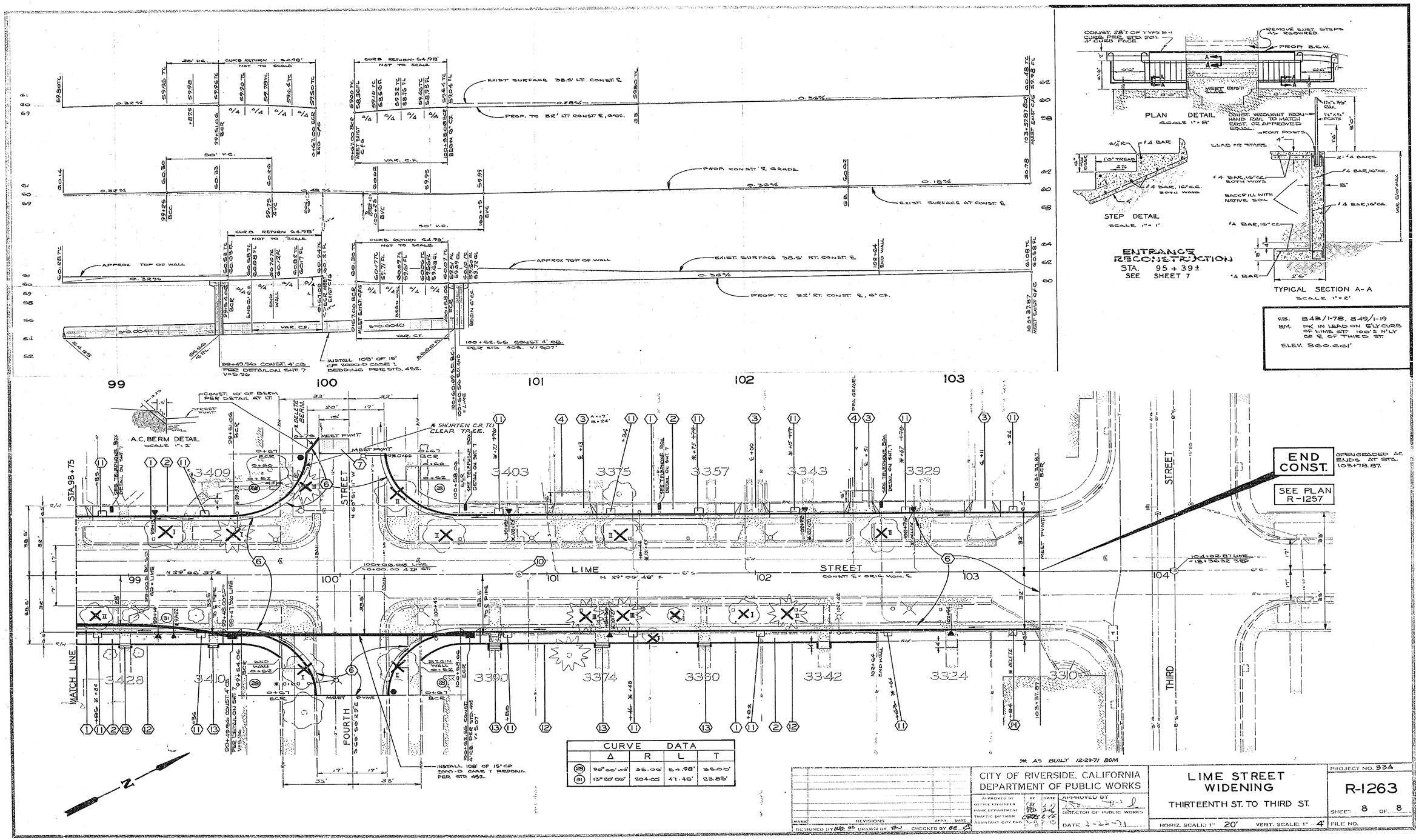

CURVE DATA				
	Δ	R	L	T
28	90°00'00"	35.00'	54.98'	35.00'
31	13°20'06"	204.00'	47.48'	23.85'

* AS BUILT 12-29-71 BDM

CITY OF RIVERSIDE, CALIFORNIA
DEPARTMENT OF PUBLIC WORKS

APPROVED BY / BY / DATE
OFFICE ENGINEER
PARK DEPARTMENT
TRAFFIC DIVISION
ASSISTANT CITY ENG.
APPROVED BY
DIRECTOR OF PUBLIC WORKS
DATE 2-22-71

MARK / REVISIONS / APPR. / DATE

DESIGNED BY BE BC DRAWN BY TW CHECKED BY BE

LIME STREET WIDENING

THIRTEENTH ST. TO THIRD ST.

HORIZ. SCALE: 1" = 20' VERT. SCALE: 1" = 4'

PROJECT NO. 334

R-1263

SHEET 8 OF 8

FILE NO.