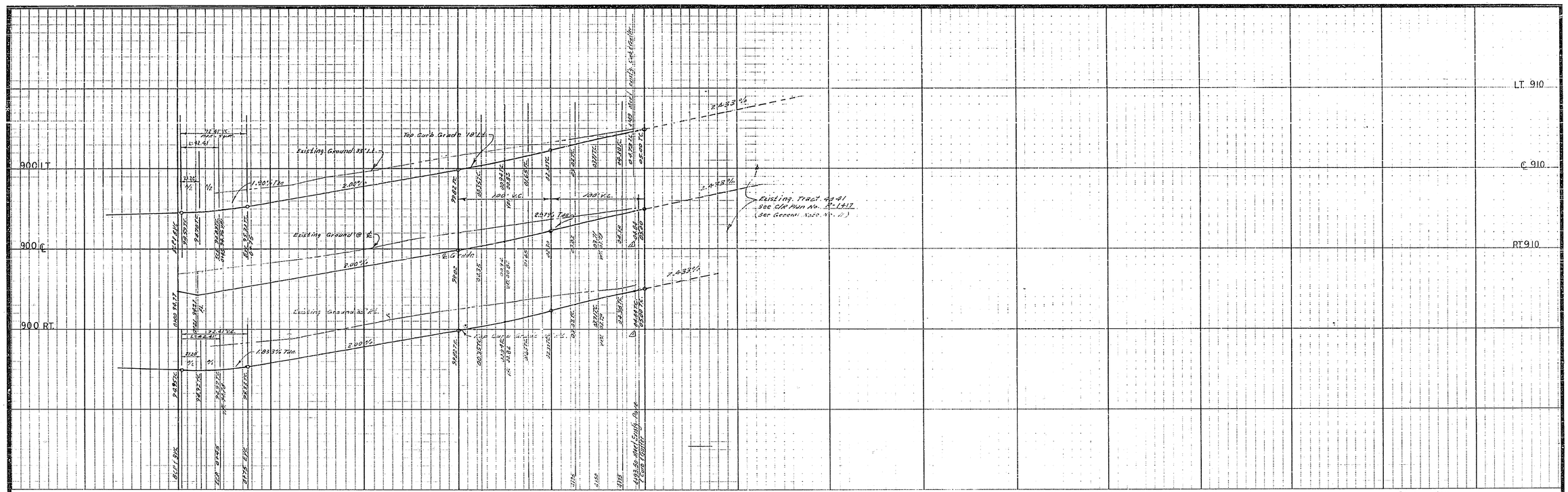

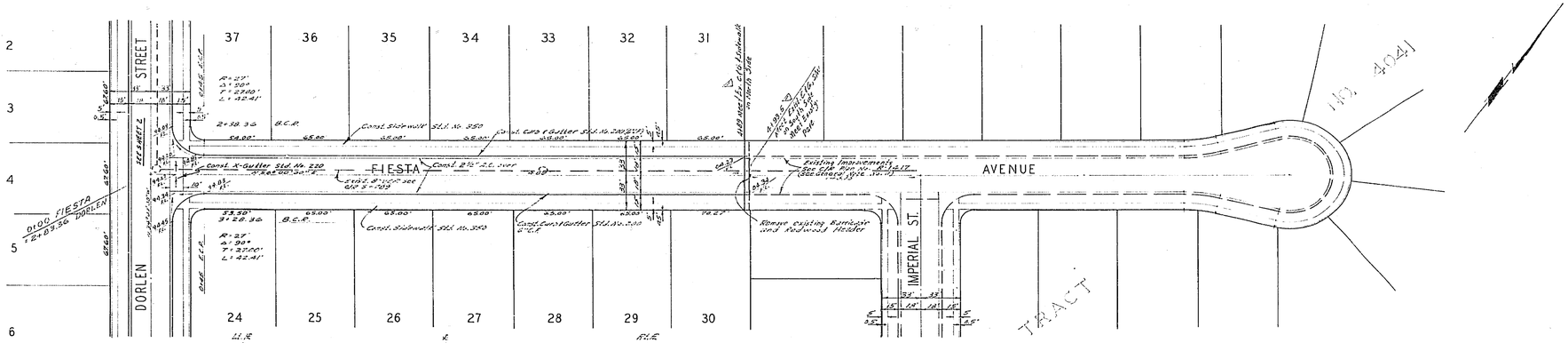

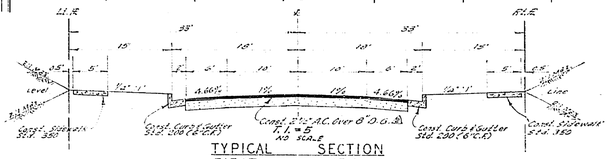

TYPICAL SECTION
FIESTA AVENUE
DORLEN STREET
LYDIA AVENUE
CADET STREET

BENCH MARK

PK nail in center of curb return at the N.W. corner of Washington St. and Lincoln Ave. Elev. 918.886 C.R. Ref. 60/182

GENERAL NOTES

(1) It shall be the responsibility of the contractor to clear the right of way in accordance with the provisions of law as it affects each utility, including irrigation lines and appurtenances, and at no cost to the City.

(2) Construction shall be in accordance with the City of Riverside, Department of Public Works, Specific Items No. and and Standard Drawings.

(3) Prime coat, seal coat, and paint binder are required.

(4) Grading will require a permit under ordinance 3095 for a cut or fill exceeding 100 cubic yards, or a 4½ fill over one foot in depth.

(5) The subdivider shall arrange for a soil test to be made by Soils Engineer after the streets have been prepared to rough grade. Depth of base material and A.C. paving shall be determined by City of Riverside Design Standards and Test Procedures.

(6) Trim edge of existing pavement, where new paving joins existing pavement, to a clean, straight line. Construct matchup paving as shown and overlay paving as directed in the field to produce a smooth crown section.

(7) Contractor shall not place rock larger than 6" within 5' of proposed sewer as per City of Riverside Plan No. S- 2492

(8) Street name and Traffic control signs shall be furnished and installed by subdivider per City specifications and Standard Drawing No. 178 Case

(9) Engineer estimates 385 cu.yds. (+ or - approximately 5%) of earth to be removed from the site.

(10) Driveways to be constructed per std. 206 and located in the field at the time of const.

(11) If improvements are not installed per Plan R-1417 these plans will have to be revised prior to start of construction.

QUANTITY ESTIMATE

Curb & Gutter Standard No. 200 6" C.R.	4,109	L.F.
2½" A.C.	58.9	TON
Sidewalk Standard No. 380	20,514	S.F.
Cross Gutter Standard No. 220	1,133	S.F.
2"x4" Redwood Header	90	L.F.
A.C. Overlay	7.0	TON
Barricade Standard No. 180	152	L.F.

ALBERT A. WEBB ASSOCIATES
CIVIL ENGINEERS
RIVERSIDE, CALIFORNIA
APPROVED BY [signature] DATE 4-21-71
R.E. No. 9876
W.O. 69-186 FOR: RINCON DEVELOPMENT F.B. 1014

MARK	REVISIONS	APPR.	DATE
A	Plans Section revised	[illegible]	3-23-71
B	Revised to meet Existing Improvements	[illegible]	4-23-71

DESIGNED BY B.E.L. DRAWN BY B.E.L. CHECKED BY [illegible]

CITY OF RIVERSIDE, CALIFORNIA
PUBLIC WORKS DEPARTMENT

	BY	DATE
APPROVED BY PRINCIPAL ENGINEER		
PARK DEPARTMENT		
TRAFFIC DIVISION		
CHIEF PUB. WKS. ENGR.		

APPROVED BY DIRECTOR OF PUBLIC WORKS
DATE

STREET PLAN AND PROFILE
FIESTA AVENUE
BETWEEN DORLEN ST. & IMPERIAL ST.
TRACT NO. 3959
SCALE: 1"=50' Horiz., 1"=5' Vert.

ACCOUNT No.
DRAWING NUMBER
R-1439
SHEET 1 OF 3
69-186-A

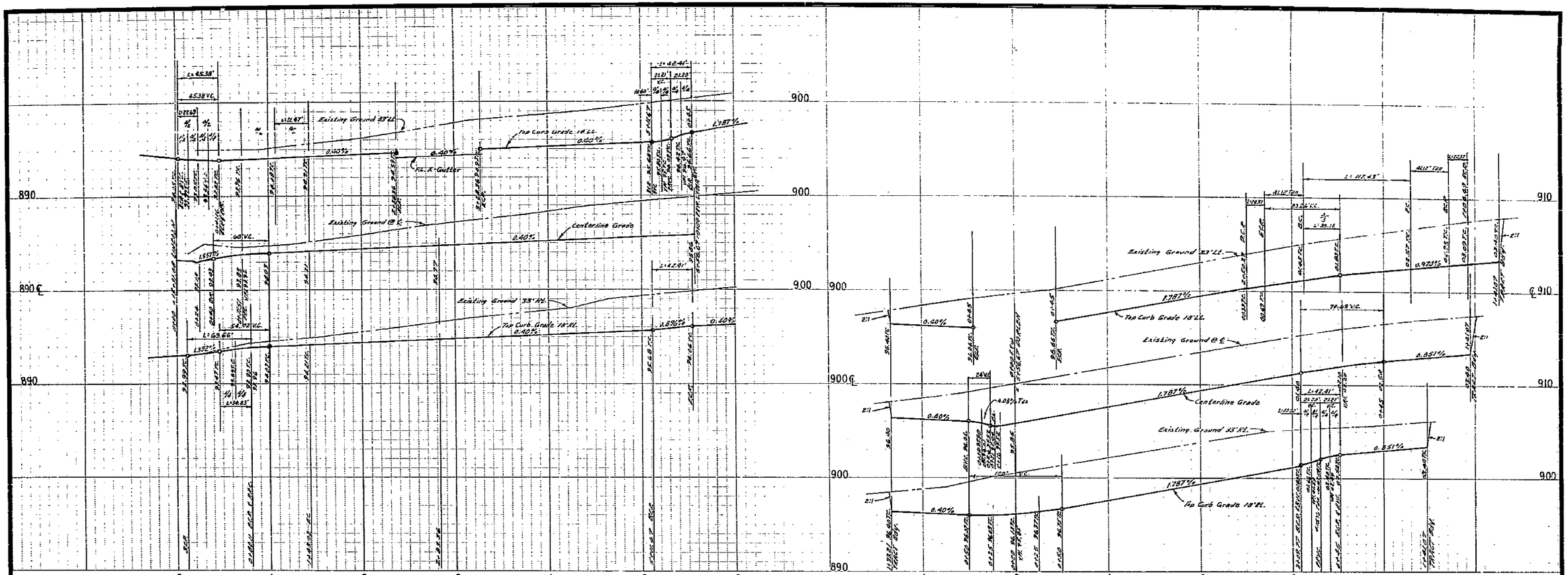

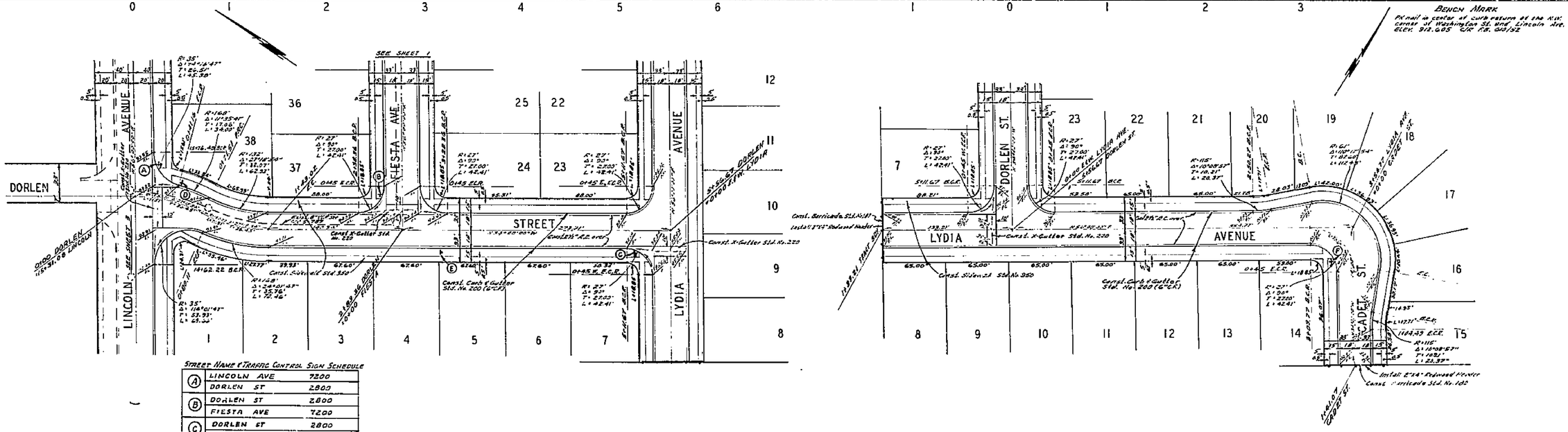

STREET NAME & TRAFFIC CONTROL SIGN SCHEDULE

A	LINCOLN AVE	7200
	DORLEN ST	2800
B	DORLEN ST	2800
	FIESTA AVE	7200
C	DORLEN ST	2800
	LYDIA AVE	7300
D	R1R 30" OCTAGON (STOP SIGN)	
E	W53R 24"x24" (NOT A THROUGH STREET)	
F	LYDIA AVE.	7200
	CADET ST.	2700

ALBERT A. WEBB ASSOCIATES
CIVIL ENGINEERS
RIVERSIDE, CALIFORNIA
APPROVED BY [signature] DATE 9/29/70
R.E. No. 9876
W.O. 69-186 FOR: RINCON DEVELOPMENT P.B. 1014

MARK	REVISIONS	APPR.	DATE

DESIGNED BY B.E.L. DRAWN BY B.E.L. CHECKED BY [illegible]

CITY OF RIVERSIDE, CALIFORNIA
PUBLIC WORKS DEPARTMENT

APPROVED BY	BY	DATE
PRINCIPAL ENGINEER	[illegible]	[illegible]
PARK DEPARTMENT	[illegible]	[illegible]
TRAFFIC DIVISION	[illegible]	[illegible]
CHIEF PUB. WKS. ENGR.		

APPROVED BY [signature]
DIRECTOR OF PUBLIC WORKS
DATE 8-4-70

STREET PLAN AND PROFILE
DORLEN ST. - LYDIA AVE.
CADET ST.
TRACT NO. 3959
SCALE: 1"=50' Horiz., 1"=5' Vert.

ACCOUNT No.
DRAWING NUMBER
R-1439
SHEET 2 OF 3
69-186-A

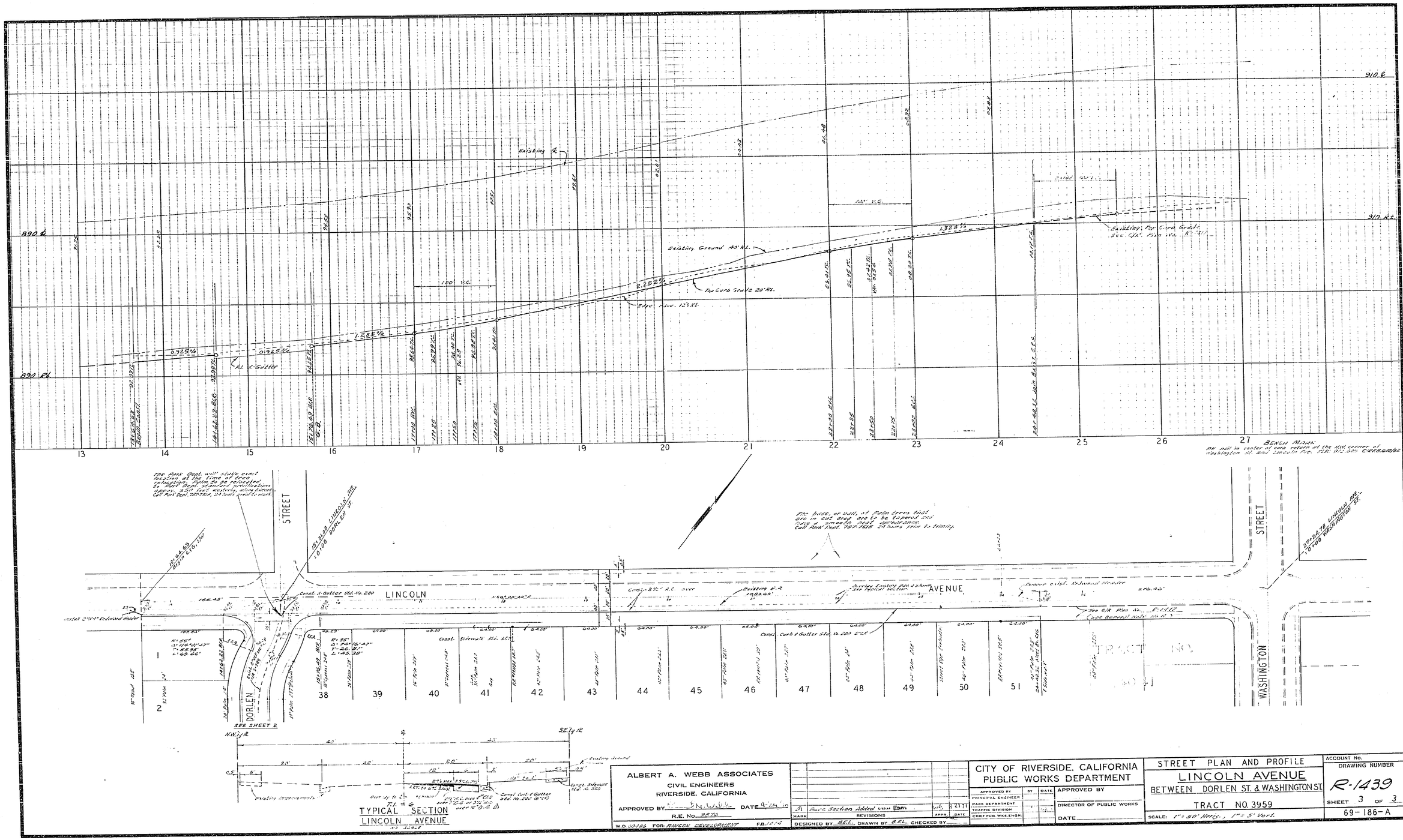

ALBERT A. WEBB ASSOCIATES
CIVIL ENGINEERS
RIVERSIDE, CALIFORNIA

APPROVED BY [illegible] DATE [illegible]
R.E. No. 9876
W.O. 69186 FOR: RINCON DEVELOPMENT F.B. 1014

MARK	REVISIONS	APPR.	DATE
A	Pure Section Added [illegible]	[illegible]	3 21 71

DESIGNED BY B.E.L. DRAWN BY B.E.L. CHECKED BY

CITY OF RIVERSIDE, CALIFORNIA
PUBLIC WORKS DEPARTMENT

APPROVED BY	BY	DATE
PRINCIPAL ENGINEER		
PARK DEPARTMENT		
TRAFFIC DIVISION		
CHIEF PUB. WKS. ENGR.		

APPROVED BY
DIRECTOR OF PUBLIC WORKS
DATE

STREET PLAN AND PROFILE
LINCOLN AVENUE
BETWEEN DORLEN ST. & WASHINGTON ST.
TRACT NO. 3959
SCALE: 1" = 50' Horiz., 1" = 5' Vert.

ACCOUNT No.
DRAWING NUMBER
R-1439
SHEET 3 OF 3
69-186-A