ABBREVIATIONS

SYMM	SYMMETRICAL	EXP JT	EXPANSION JOINT
ABT	ABOUT	CONST. JT	CONSTRUCTION JOINT
EL	ELEVATION	℄	PLATE
MAX	MAXIMUM	MAT'L.	MATERIAL
MIN	MINIMUM	E.W.	EACH WAY
R	RISER	CLR	CLEAR
T	TREAD	DRWG	DRAWING
⌀	DIAMETER	℄	CENTER LINE
TYP	TYPICAL		

INDEX OF DRAWINGS

TITLE	DWG. NO.
SITE PLAN	S-1
PEDESTRIAN BRIDGE PLAN AND ELEVATION	S-2
BRIDGE AND FOUNDATION REINFORCEMENT AND DETAILS	S-3
ABUTMENT APPROACH STRUCTURES PLAN AND SECTIONS	S-4

GENERAL NOTES

1. UNLESS OTHERWISE NOTED HEREON, ALL CONSTRUCTION SHALL CONFORM TO THE "STANDARD SPECIFICATIONS FOR PUBLIC WORKS CONSTRUCTION, 1979 EDITION."
2. IT SHALL BE THE CONTRACTOR'S RESPONSIBILITY TO VERIFY EXISTING SITE CONDITIONS, DIMENSIONS AND ELEVATIONS PRIOR TO COMMENCING WITH CONSTRUCTION. ANY DISCREPANCIES OR DEVIATIONS FROM THESE DRAWINGS SHALL BE BROUGHT TO THE ATTENTION OF THE ENGINEER FOR RESOLUTION.
3. ALL CONCRETE SHALL BE NORMAL WEIGHT WITH A MINIMUM ULTIMATE COMPRESSIVE STRENGTH OF 3000 PSI AT 28 DAYS.
4. COARSE AGGREGATE SHALL CONFORM TO ASTM C33-71a. MAXIMUM AGGREGATE SIZE SHALL BE ~~3/4~~ 1 INCH.
5. ALL STEEL REINFORCEMENT SHALL CONFORM TO ASTM A615-68, GRADE 60.
6. UNLESS OTHERWISE SHOWN ON THE DRAWINGS, COVER FOR REINFORCING STEEL SHALL BE AS FOLLOWS.

A.	WHERE CONCRETE IS EXPOSED TO EARTH BUT PLACED AGAINST FORMS	2"
B.	WHERE CONCRETE IS PLACED DIRECTLY AGAINST EARTH	3"
C.	EXPOSED CONCRETE ABOVE GRADE	2"
D.	WHERE CONCRETE IS NOT EXPOSED TO EARTH OR WEATHER	1-1/2"
E.	COLUMN TIES AND SPIRALS	1-1/2"

7. REINFORCEMENT, ANCHOR BOLTS AND CONCRETE INSERTS SHALL BE POSITIVELY SECURED IN PLACE PRIOR TO PLACING CONCRETE.
8. REINFORCING STEEL EMBEDMENT AND SPLICES SHALL BE AS SHOWN ON THE DRAWINGS.
9. ANCHOR BOLTS SHALL CONFORM TO ASTM A307. WASHERS SHALL CONFORM TO ASTM A325.
10. METAL DECKING SHALL BE TYPE N, 18 GAGE, AS MANUFACTURED BY PETERSON CONSTRUCTION PRODUCTS, OR ENGINEERING APPROVED EQUAL.
11. STRUCTURAL STEEL SHALL CONFORM TO ASTM A36.
12. CONSTRUCTION JOINTS SHALL BE LOCATED AS SHOWN ON THESE DRAWINGS. OTHER LOCATIONS SHALL BE SUBJECT TO THE APPROVAL OF THE ENGINEER.
13. PREFORMED EXPANSION JOINT MATERIAL SHALL BE ASPHALT IMPREGNATED PAPER AS MANUFACTURED BY W.R. MEADOWS, INC., OR ENGINEERING APPROVED EQUAL. INSTALLATION SHALL BE IN ACCORDANCE WITH MANUFACTURER'S RECOMMENDATIONS.
14. JOINT SEALING COMPOUND SHALL BE A BITUMINOUS BASE MATERIAL AS MANUFACTURERD BY W.R. MEADOWS, INC., OR ENGINEERING APPROVED EQUAL. INSTALLATION SHALL BE IN ACCORDANCE WITH MANUFACTURER'S RECOMMENDATIONS.
15. COIL ROD INSERTS SHALL BE TYPE SCL-3 AS MANUFACTURED BY SUPERIOR CONCRETE ACCESSORIES, INC., OR ENGINEERING APPROVED EQUAL.
16. COIL RODS SHALL BE TYPE CTR AS MANUFACTURED BY SUPERIOR CONCRETE ACCESSORIES, INC., OR ENGINEERING APPROVED EQUAL.
17. LIFTING INSERTS SHALL BE TYPE CT 1-1/4" 36 M AS MANUFACTURED BY SUPERIOR CONCRETE ACCESSORIES, INC., OR ENGINEERING APPROVED EQUAL.
18. EXPOSED CORNERS SHALL HAVE A 3/4" CHAMFER.

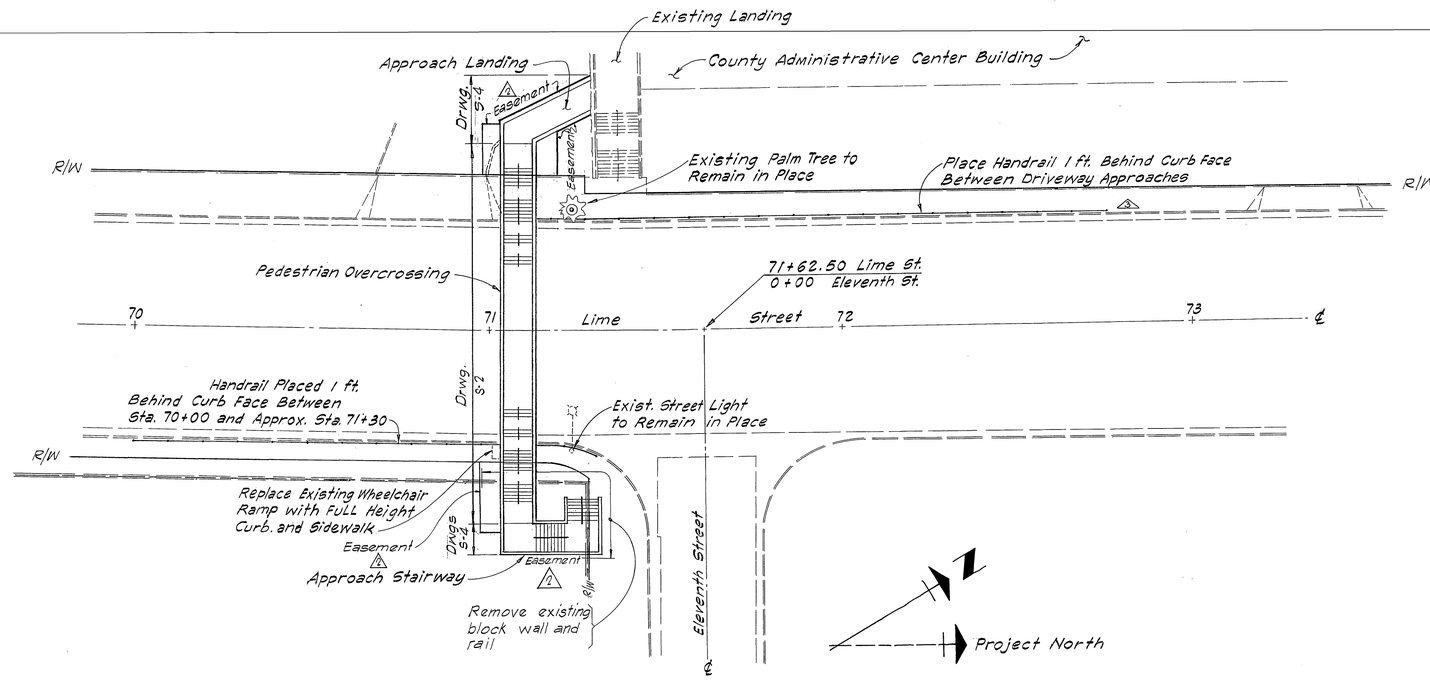

SITE PLAN

RECEIVED
OCT 13 1980
DEPT. OF PUBLIC WORKS

REVISION	DATE	DESCRIPTION	BY	APPD
4	1-12-82	AS BUILT ON PLAN	RJM	
3	10-22-80	DELETE 40' HANDRAIL LT STA. 72+76 TO 73+16	CR	
2	10-3-80	General Revision	SPA	KMK
1	8-29-80	General Revision	SPA	KMK

SVERDRUP & PARCEL AND ASSOCIATES, INC.
ENGINEERS - ARCHITECTS
SAN FRANCISCO, CALIFORNIA

REGISTERED PROFESSIONAL ENGINEER HARRY W. GOULEY No. 14027 CIVIL STATE OF CALIFORNIA

CITY OF RIVERSIDE
LIME STREET PEDESTRIAN BRIDGE

SITE PLAN

0 20 40
Scale: 1" = 20'-0"

SCALE	1" = 20'-0"	SUBMITTED	DATE 5/21/80
DESIGNED	HWG/KMK	SVERDRUP & PARCEL AND ASSOCIATES, INC.	DRAWING NO.
DRAWN	TYW	APPROVED BY	S-1
CHECKED	HWG	PUBLIC WORKS DIRECTOR DATE 10/15/80	

R-2229

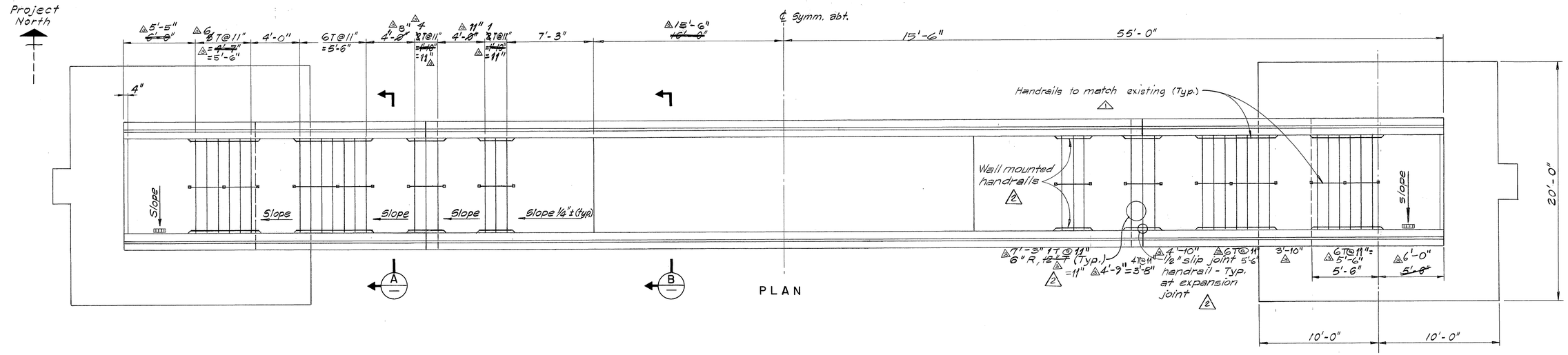

PLAN

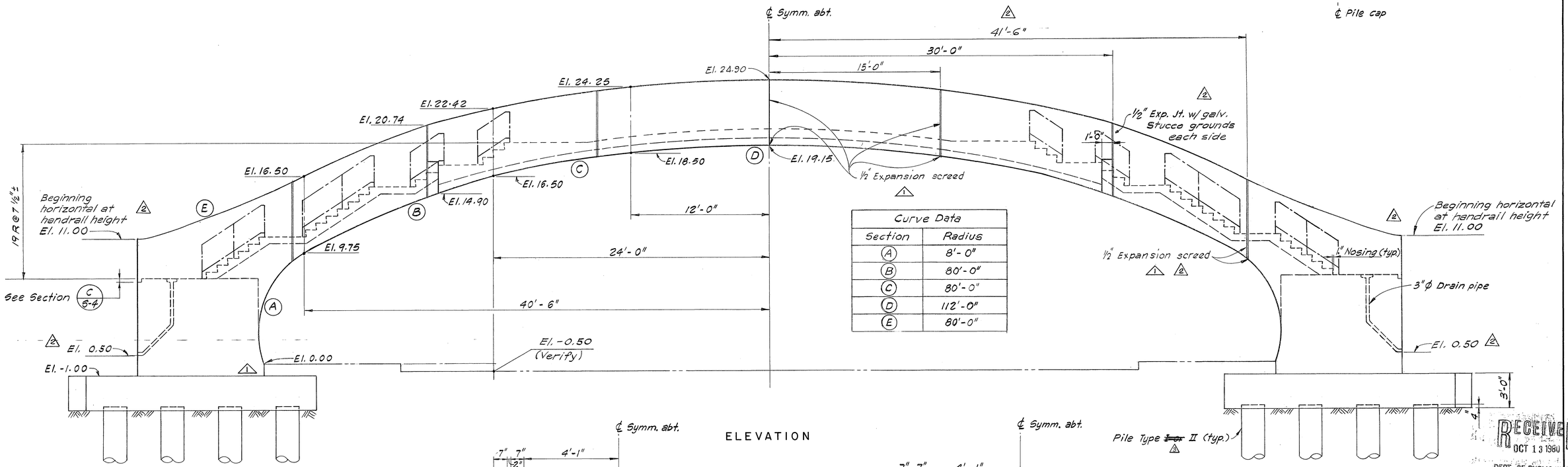

Curve Data	
Section	Radius
A	8'-0"
B	80'-0"
C	80'-0"
D	112'-0"
E	80'-0"

ELEVATION

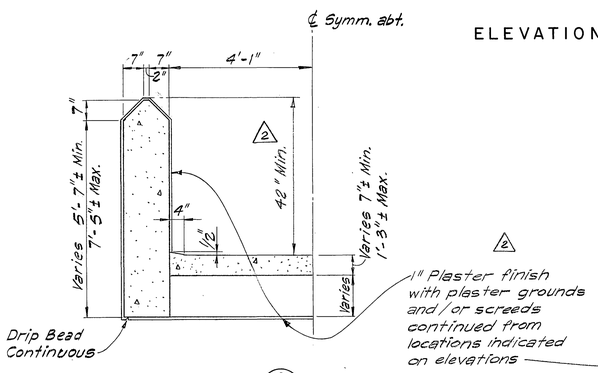

SECTION A
No Scale

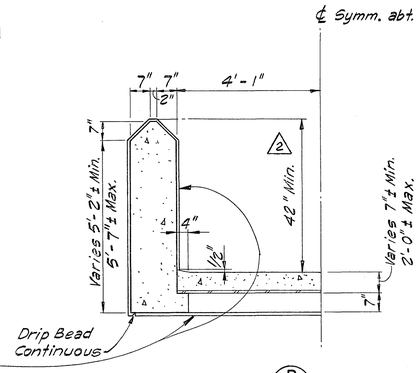

SECTION B
No Scale

NOTES:

1. For General Notes, see Dwg. S-1
2. All exposed bridge girder surfaces shall have a cement/stucco finish to match color and texture of base structure of County Administrative Center Building.
3. All walks, steps and ramps shall have a non-slip finish.
4. Handrails shall be galvanized iron and shall match in both size and design the existing railings for the County Administrative Center Building.
5. All dimensions & Elevations shown hereon are to surface of concrete.

0 5 10
Scale: 1/4" = 1'-0"

RECEIVED
OCT 13 1980
DEPT. OF PUBLIC WORKS

REVISION	DATE	DESCRIPTION	BY	APPD
3	1/17/80	AS BUILT ON PLAN	RJM	
2	10/9/80	General Revision	SPA	KMK
1	8-29-80	General Revision	SPA	KMK

REGISTERED PROFESSIONAL ENGINEER HARRY W. GOBLER No. 14497 CIVIL STATE OF CALIFORNIA

SVERDRUP & PARCEL AND ASSOCIATES, INC.
ENGINEERS - ARCHITECTS
SAN FRANCISCO, CALIFORNIA

CITY OF RIVERSIDE
LIME STREET PEDESTRIAN BRIDGE

PEDESTRIAN BRIDGE - PLAN & ELEVAT'

SCALE 1/4" = 1'-0"	SUBMITTED Thos. L. Anderson SVERDRUP & PARCEL AND ASSOCIATES, INC.	DATE 5/2	
DESIGNED HWG/KMK		DRAWING NO.	
DRAWN TYW	APPROVED BY Robert C. Gobler PUBLIC WORKS DIRECTOR	S-2	
CHECKED HWG	DATE 10/15/80		

R-2229

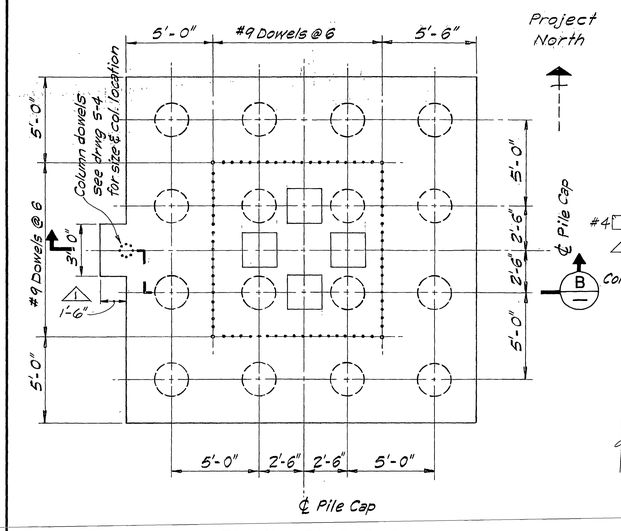

PLAN - PILE CAP

WEST PILE CAP (SHOWN)
EAST PILE CAP (OPPOSITE HAND)

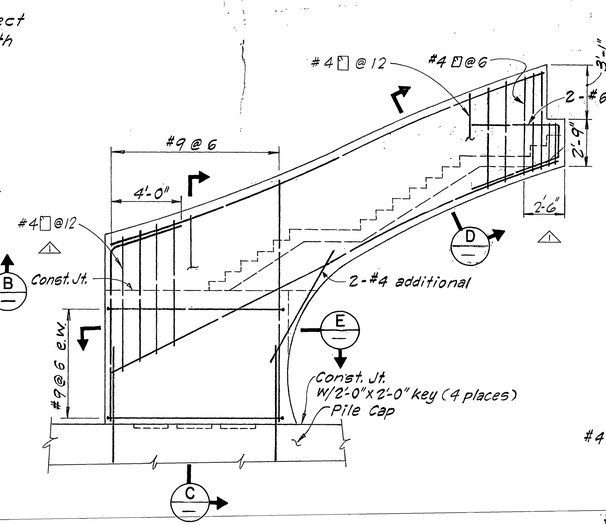

WEST ABUTMENT ELEVATION

(EAST ABUTMENT OPPOSITE HAND)

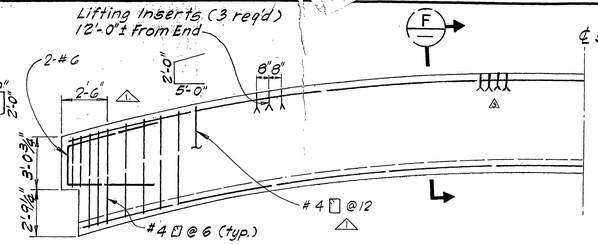

PRECAST GIRDER ELEVATION

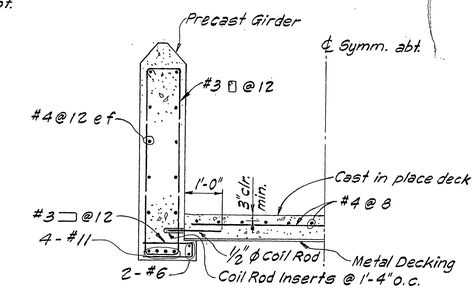

SECTION F

No Scale

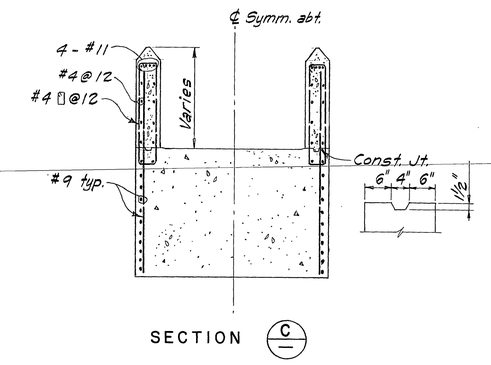

SECTION C

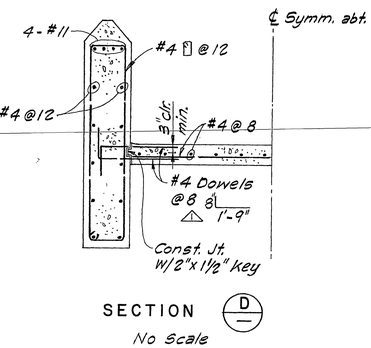

SECTION D

No Scale

NOTES

1. For General Notes, See Drawing S-1
2. Bearing pads beneath the precast bridge girder shall be ¼" thick "Neoprene" as manufactured by Construction Gaskets, Inc., or Engineering approved equal.

SECTION B

SECTION E

DRILLED PILE DETAIL

No Scale

SECTION A

PILE SCHEDULE			
TYPE	D	L	SPIRAL PITCH
I	16"	30'-0"	5"
II	24"	24'-0"	3"
III	16"	20'-0"	5"

TYPICAL SECTION THRU GIRDER CONNECTION

No Scale

SECTION G

No Scale

RECEIVED
OCT 13 1980
DEPT. OF PUBLIC WORKS

REVISION	DATE	DESCRIPTION	BY	APPD
2	1-12-82	As Built on Plan	RJM	—
1	8-29 80	General Revision	SPA	KMK

SVERDRUP & PARCEL AND ASSOCIATES, INC.
ENGINEERS - ARCHITECTS
SAN FRANCISCO, CALIFORNIA

CITY OF RIVERSIDE
LIME STREET PEDESTRIAN BRIDGE

BRIDGE & FOUNDATION REINFORCEMENT & DETAILS

REGISTERED PROFESSIONAL ENGINEER HARRY W. CORNELL No. 14697 CIVIL STATE OF CALIFORNIA

0 5 10
Scale: ¼" = 1'-0"

SCALE	¼" = 1'-0"	SUBMITTED	DATE 5/21/80
DESIGNED	KMK	SVERDRUP & PARCEL AND ASSOCIATES, INC.	DRAWING NO. S-3
DRAWN	TYW	APPROVED BY	
CHECKED	HWG	PUBLIC WORKS DIRECTOR DATE 10/13/80	

R-2229A

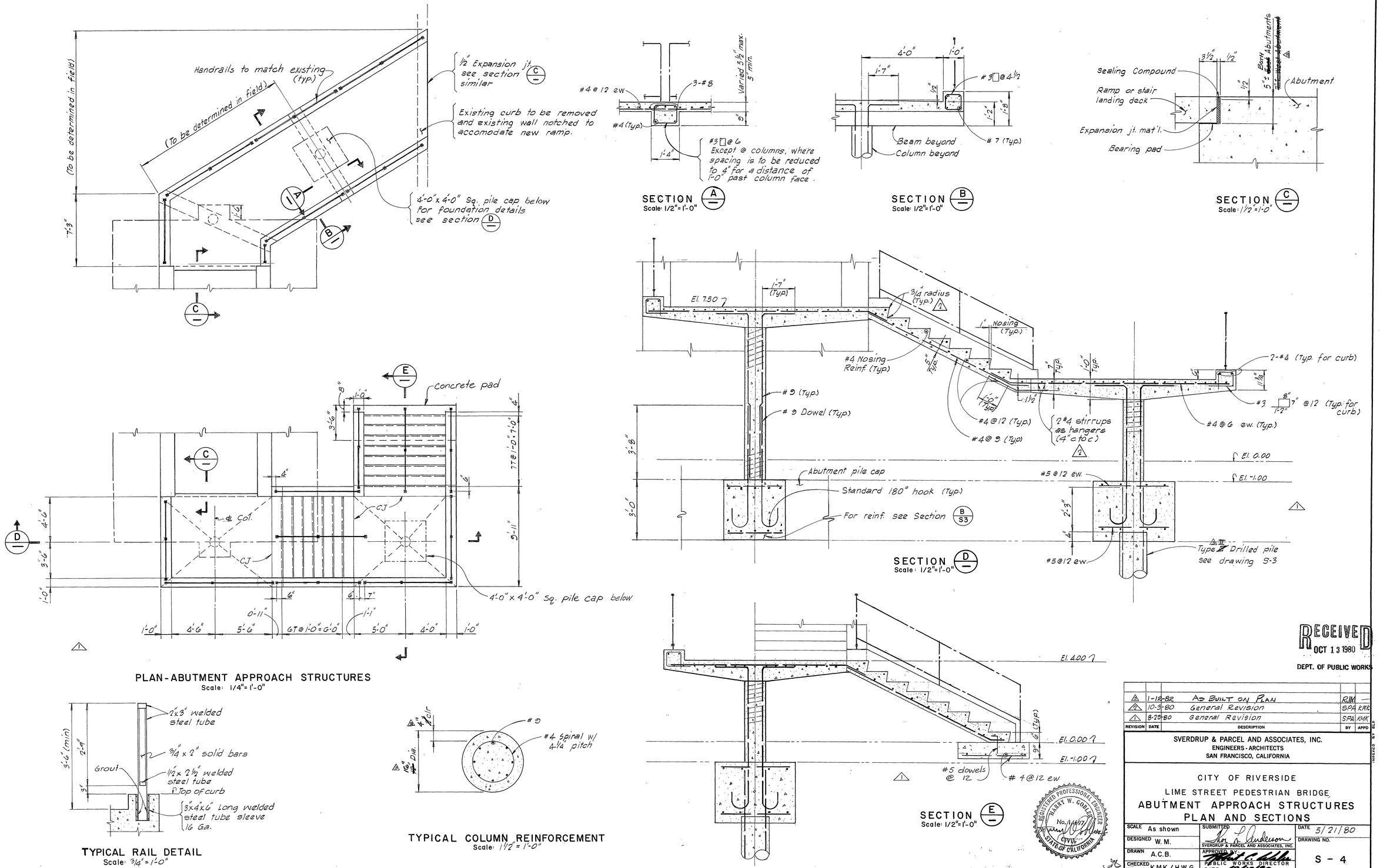

RECEIVED
OCT 13 1980
DEPT. OF PUBLIC WORKS

REVISION	DATE	DESCRIPTION	BY	APPD
3	1-12-82	As Built on Plan	RJM	—
2	10-3-80	General Revision	SPA	KMK
1	8-29-80	General Revision	SPA	KMK

SVERDRUP & PARCEL AND ASSOCIATES, INC.
ENGINEERS - ARCHITECTS
SAN FRANCISCO, CALIFORNIA

CITY OF RIVERSIDE
LIME STREET PEDESTRIAN BRIDGE
ABUTMENT APPROACH STRUCTURES
PLAN AND SECTIONS

SCALE As shown	SUBMITTED	DATE 5/21/80	
DESIGNED W. M.	SVERDRUP & PARCEL AND ASSOCIATES, INC.	DRAWING NO.	
DRAWN A.C.B.	APPROVED BY: PUBLIC WORKS DIRECTOR	S - 4	
CHECKED K.M.K./H.W.G.	DATE: 10/15/80		

REGISTERED PROFESSIONAL ENGINEER HARRY W. GOBLER No. 14697 CIVIL STATE OF CALIFORNIA

R-2229A