STREET NAME & TRAFFIC SIGN SCHEDULE	
(A)	Wickham Dr. 3000 Arizona Ave. 11300
(B)	Mumford Ave. 3000 Lynch Lane 11300
(C)	Mumford Ave. 3100 ~~Pitcher Pl.~~ FAIR COVE LN. (5) 11300
(D)	Wickham Dr. 3100 ~~Pitcher Pl.~~ FAIR COVE LN. (5) 11300
(E)	Mumford Ave. 3100 Millard Dr. 11300
(F)	Arizona Ave. 11300 Mumford Ave. 3000
(G)	R-1 (Stop Sign) 30" Octagon
(H)	W-31 Warning Sign

B.M. (03-D)
FD. P.K. NAIL & TAG IN N'LY CEMENT BANK OF R.W.C. CANAL E'LY SIDE FILLMORE ST.
ELEVATION = 797.286'

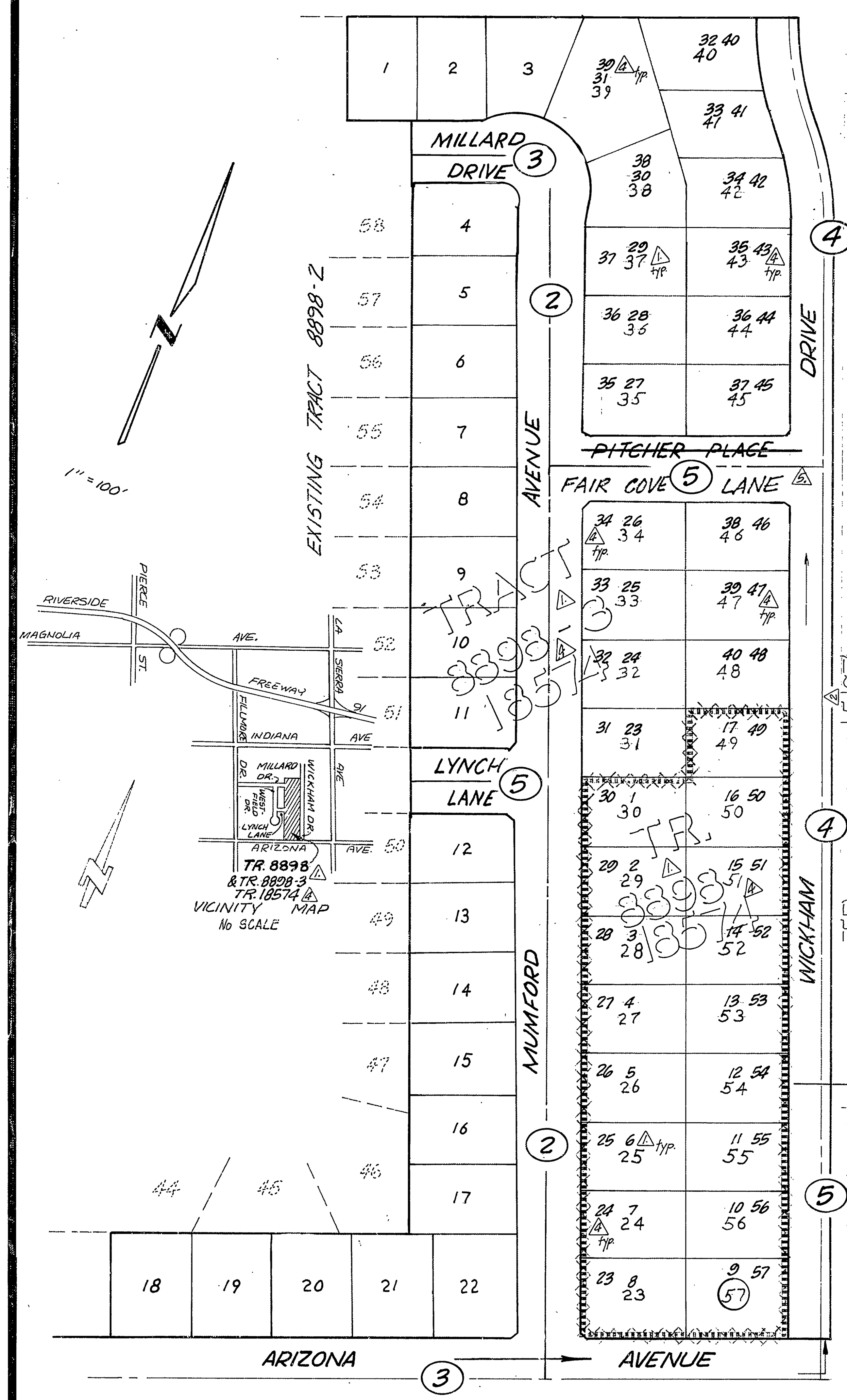

NOTE: ◯... INDICATES SHEET NO.

GENERAL NOTES:

1. It shall be the responsibility of the contractor to clear the right of way in accordance with the provisions of the law as it affects each utility including irrigation lines and appurtenances and at no cost to the city.
2. Construction shall be in accordance with the City of Riverside, Department of Public Works, standard drawings and the standard specifications for Public Works construction, 1979 edition.
3. Prime coat, seal coat, and paint binder are required.
4. Curb and gutter shall be stakes with 3.0 foot off-sets at 25.00 foot intervals.
5. Traffic control signs shall be in place prior to opening the streets to traffic.
6. Driveway approaches shall be constructed per City of Riverside standard drawing No. 302. Exact size and location to be determined at time of construction as approved by the City Traffic Engineer.
7. The subdivider shall arrange for a soil test to be made by a soils engineer after the streets have been prepared to rough grade. Depth of base material and A.C. paving shall be determined by the City of Riverside design standards and test procedures.
8. See "Street Lighting Plan" for quantity and location of required street lights.
9. 4" x 4" blockouts for mail boxes required in curb sidewalk.
10. Trim edge of existing pavement where new pavement joins to a smooth, straight line. Construct match-up paving as shown on plan and overlay as directed in the field to produce a smooth section. Engineer estimates overlay to be ~~0~~ tons.
11. All flagged elevations shall be staked in the field by the private engineer.
12. The contractor shall contact the Public Service Department (787-7251) to pick up existing std. 180 barricades that are being removed. The City inspector will make the final determination on whether a barricade may be relocated.
13. The private engineer signing these plans is responsible for assuring the accuracy and acceptability of the work hereon. In the event of discrepancies arising during construction the private engineer signing these plans shall be responsible for determining an acceptable solution and revising the plans for approval by the city.
14. Notice to contractor: The existence and location of any underground utility pipes or structures shown on these plans were obtained by a search of the available records. To the best of our knowledge there are no existing utilities except as shown on these plans. The contractor is required to take precautionary measures to protect the utility lines shown and any other lines not of record or not shown on these plans.
15. All testing and certification of the treated base will be at the developer's cost.
16. All related work shall conform to the City of Riverside, Park and Recreation Department Standards.
17. Contact the Park Projects Inspector a minimum of 48 hours in advance at 787-7223 to schedule inspections. Inspections shall be required: (a) when plant locations have been spotted in the field prior to digging plant pits, (b) while digging plant pits and planting/relocating trees, (c) after planting and all other indicated or specificied work has been completed for start of maintenance, and (d) at end of maintenance/final acceptance (contractor/developer) will be released from maintenance only upon receipt of written notification from the city that the Park and Recreation Department is assuming maintenance responsibilities).
18. The Contractor/Developer shall maintain all plantings for a minimum period of one (1) year.
19. Street tree planting shall be as follows:

	Street Name	Botanical Name/Common Name	Min. Size	Approx. No. Req.
a.	Arizona Ave.	Washingtonia filifera/ California Fan Palm	15 gal	2
b.	Lynch Lane	Magnolia g. Majestic Beauty/ Magnolia	15 gal	2
c.	Millard Dr.	Koelreuteria bipinnata/ Chinese Flame Tree	15 gal	4
d.	~~Pitcher Pl.~~ (5) FAIR COVE LN.	Magnolia g. Majestic Beauty/ Magnolia	15 gal	6
e.	Wickham Dr.	Quercusilex/Holly Oak	15 gal	24
f.	Mumford Ave.	Koelreuteria bipinnata/ Chinese Flame Tree	15 gal	37

20. Prior to commencement of any tree removal or relocation a permit is required from the Public Works Department, City of Riverside.

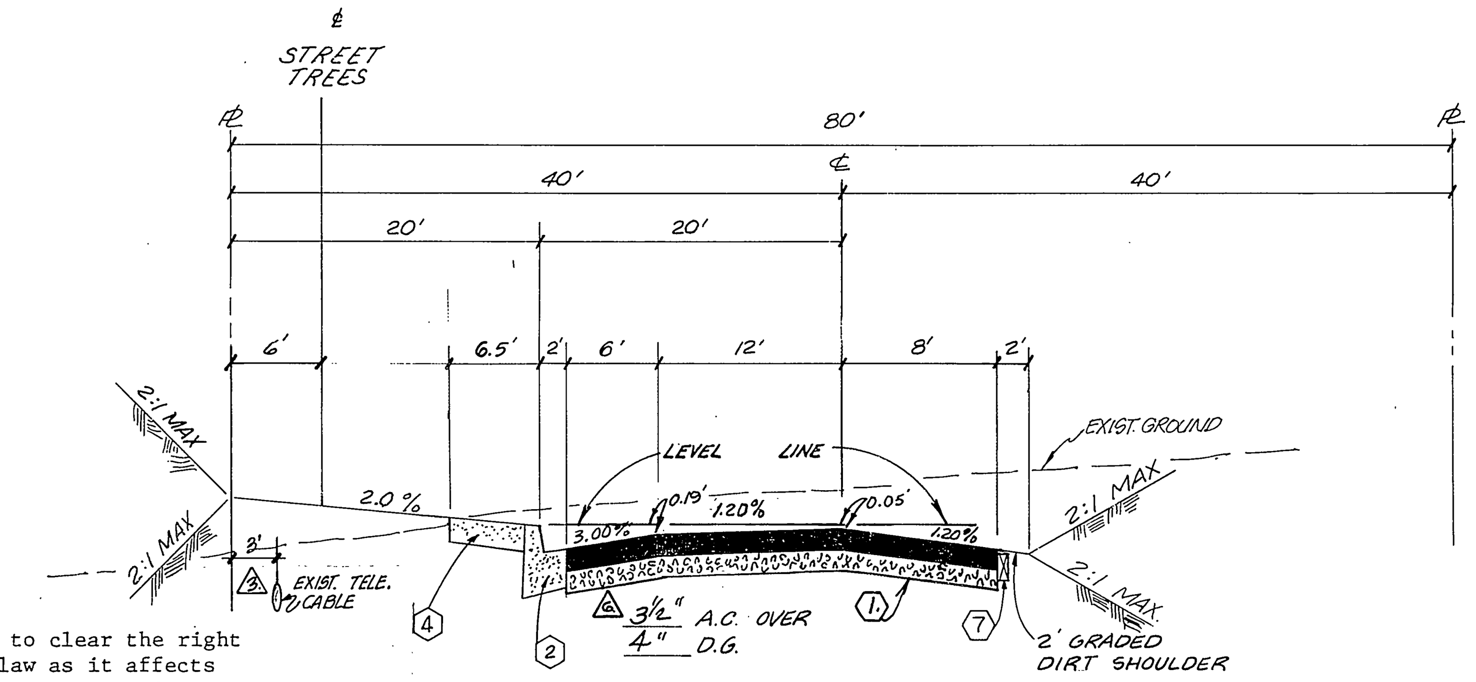

NO SCALE **TYPICAL SECTION**
ARIZONA AVENUE (STA. 6+73.24 TO ℄ WICKHAM DRIVE)
T.I. = 5

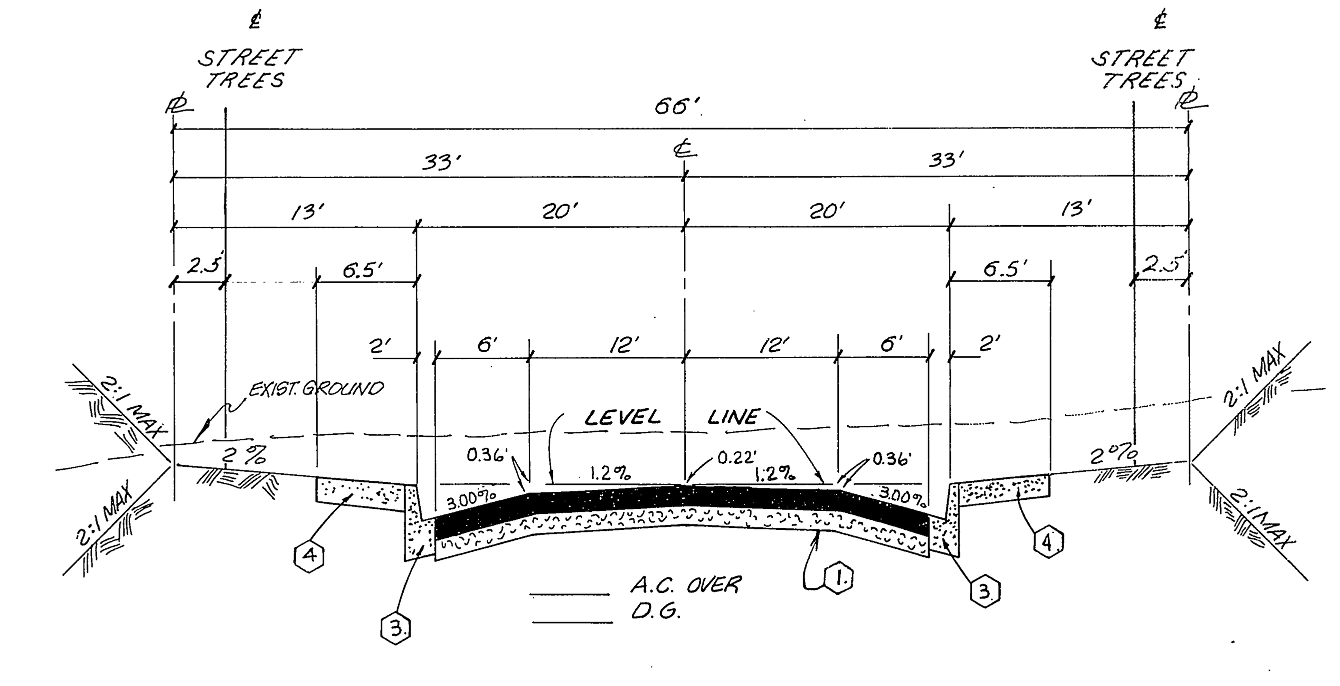

TYPICAL SECTION
NO SCALE
MILLARD DRIVE
T.I. = 5

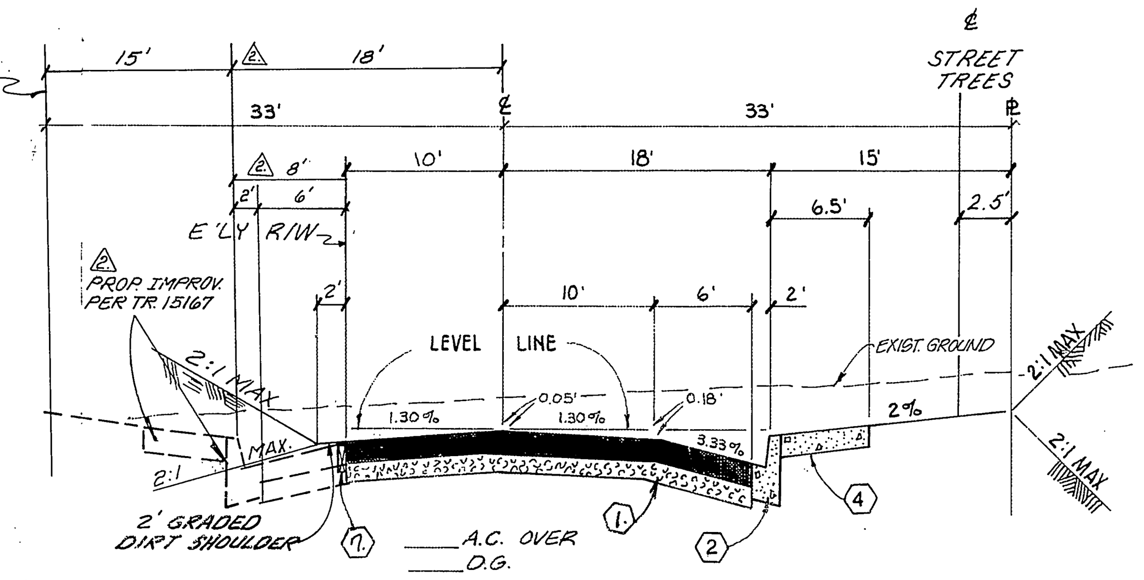

TYPICAL SECTION
NO SCALE
WICKHAM DRIVE (STA 14+23.38 TO ℄ ARIZONA AVE.)
T.I. = 5

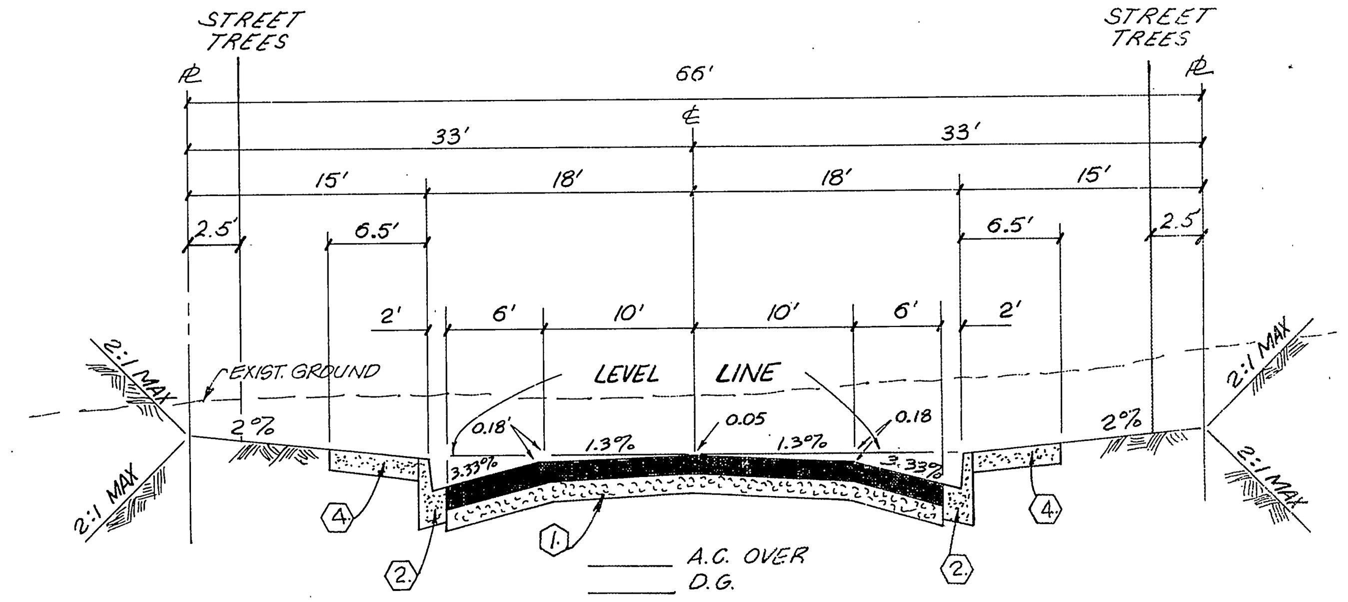

TYPICAL SECTION
NO SCALE
MUMFORD AVE.
LYNCH LANE
~~PITCHER PL.~~ FAIR COVE LANE (5)
T.I. = 5

CONSTRUCTION NOTES:

1. Construct A.C. pavement over D.G. base per typical section.
2. Construct curb and gutter per Standard Drawing 200 (Type I) 6" C.F.
3. Construct curb and gutter per Standard Drawing 200 (Type I) 8" C.F.
4. Construct curb sidewalk per Standard Drawing 325.
5. Construct wheelchair ramps per Standard Drawing 304.
6. Construct cross-gutter per Standard Drawing 220.
7. Place 2" x 4" redwood header.
8. Construct 430 l.f. concrete blockwall per detail shown hereon.
9. PLANT STREET TREES PER CITY OF RIVERSIDE PARKS + RECREATION DEPT. STANDARDS.

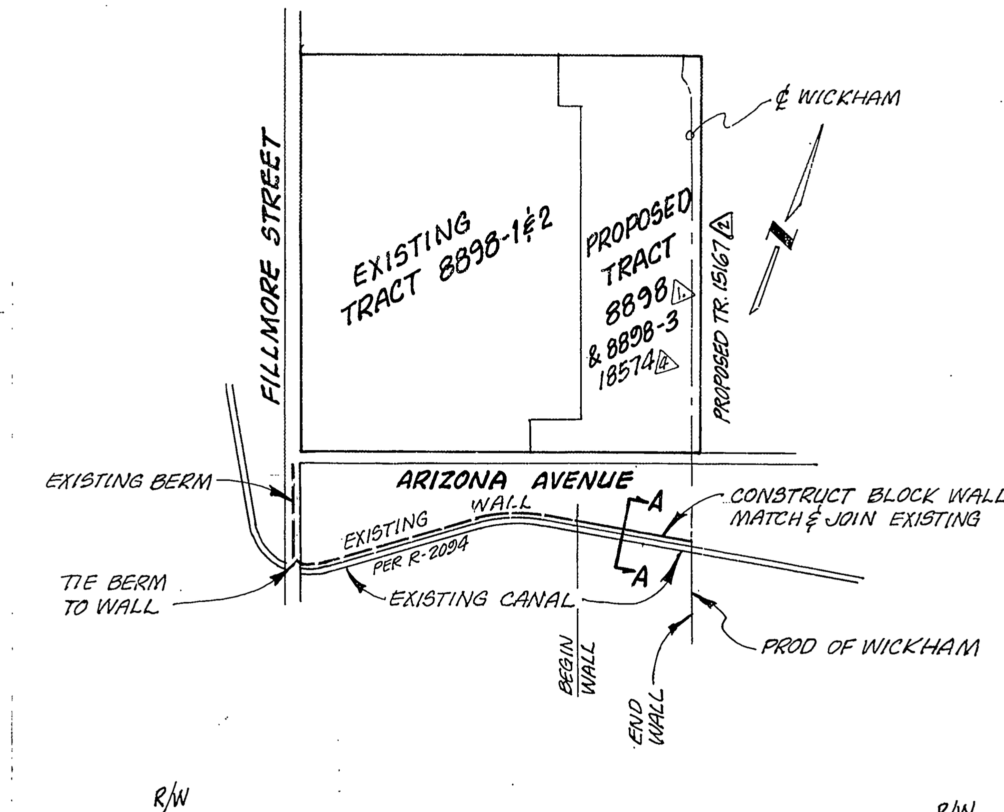

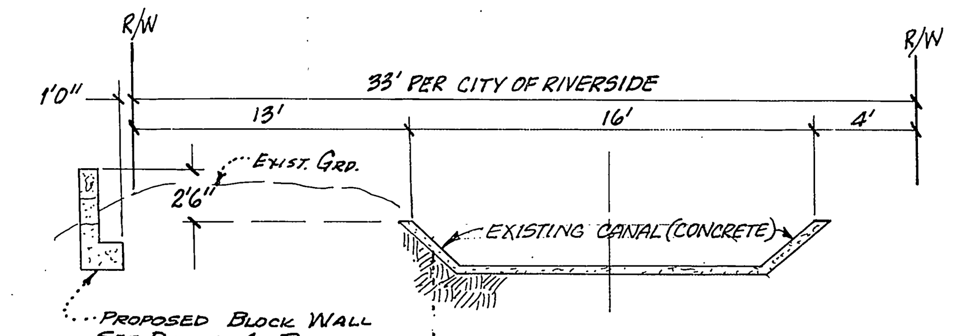

SECTION 'A'-'A'
SCALE: 1" = 6'

WALL NOTE: IF THE CONTRACTOR DESIRES TO UTILIZE THE CANAL CO. RIGHT OF WAY, HE SHALL FIRST OBTAIN A RIGHT OF ENTRY FROM THE CITY OF RIVERSIDE WATER DEPT.

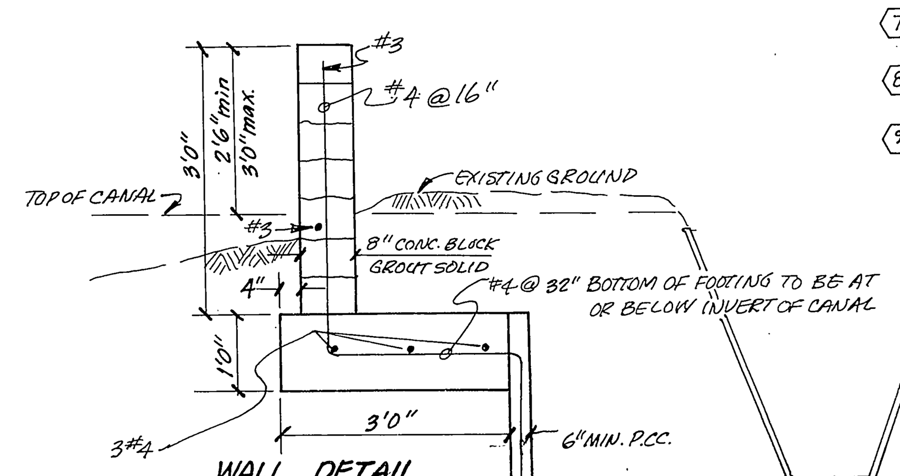

WALL DETAIL
(NOT TO SCALE)

WALL NOTES

1. ALL CELLS CONTAINING REINFORCING STEEL SHALL BE GROUTED FULL.
2. ALL CONCRETE BLOCK SHALL BE CLASS "A" UNITS.
3. FOOTING SHALL BE CLASS "B" CONCRETE, fc = 2500 p.s.i, @ 28 DAYS.
4. OMIT MORTAR IN ALTERNATE VERTICAL JOINTS OF BOTTOM RUN OF BLOCK.
5. USE INTEGRAL COLOR TAN BLOCK.
6. THIS WALL REQUIRES A PERMIT AND INSPECTION FROM THE PUBLIC WORKS ENGINEERING DIVISION

✱ AS BUILT 3·14·85 BRET!

PLANS CHECKED AND FOUND TO COMPLY WITH CITY OF RIVERSIDE REQUIREMENTS
Checked by:
Max Sloan RCE 10354 2-24-81
BERRYMAN & STEPHENSON INC. date

CITY OF RIVERSIDE
DOMESTIC SYSTEM AND IRRIGATION DIVISION
Fred Lantz 2/8/80
CHIEF UTILITIES ENGINEER, WATER DATE

Contractor agrees that he shall assume sole and complete responsibility for job site conditions during the course of construction of this Project, including safety of all persons and property; that this requirement shall apply continuously and not be limited to normal working hours; and that the Contractor shall defend, indemnify and hold the Owner and the Engineer harmless from any and all liability, real or alleged, in connection with the performance of work on this Project, excepting for liability arising from the sole negligence of the Owner or the Engineer.

APPROVED BY: (3)
B. D. Vest
FOR PACIFIC TELEPHONE CO.
6-18-81
DATE

J. F. DAVIDSON ASSOCIATES
CIVIL ENGINEERS - SURVEYORS - PLANNERS
RIVERSIDE, CALIFORNIA
APPROVED BY John W Caty DATE 12/12/79
R.E. No. 17550
W.O. 5057 FOR: MURRAY DEV. CO. F.B.

MARK	REVISIONS	APPR.	DATE
(6)	Added paving section on Arizona; R-Value = 66, SR 1151		5-25-83
(5)	REVISED ST. NAME ~ FAIR COVE LN. JWC 1/11/83		2-15-83
(4)	Revised Tract No. & Lot Nos. ~ TR. 18574 JWC 5/17/82 SP		6-11-82
(3)	Added Exist. Telephone Cable, Arizona Ave. SP		7-2-81
(2)	Added Proposed Tr. 15167 JWC SP 5/1/81		5-14-81
(1)	Delineated Phase Bdry. & Renumbered Lots JWC SP		

DESIGNED BY C.H. DRAWN BY C.F. CHECKED BY C.H.

CITY OF RIVERSIDE, CALIFORNIA
DEPARTMENT OF PUBLIC WORKS

APPROVED BY	BY	DATE
PRINCIPAL ENGINEER		
PARK DEPARTMENT		2/5/81
TRAFFIC DIVISION		3/27/81
CHIEF P. W. ENGR.		4-2
PLANNING DEPT.		2-5-81

7-19-81

APPROVED BY
DIRECTOR OF PUBLIC WORKS
DATE 4/3/81

STREET PLANS & PROFILE
TRACT NO. 8898-3 (1) 18574 (4)
TITLE SHEET

PROJECT NO. R-2317
SHEET 1 OF 5
FILE NO. 5546

765 LT.
765 ℄
765 RT.
MATCH LINE SEE SHT. 3
MATCH LINE SEE SHT. 3
MATCH LINE SEE SHT. 3
~~174.98' CURB TRANSITION~~ ~~8"C.F. to 6"C.F.~~
~~50' CURB TRANS~~
T.C.@0.00%
T.C.@ 0.503%
℄ @ 0.40%
℄ @ 0.60%
0.40%
0.10%
0.60%
0.78%
0.84%
EXISTING GROUND @ LT. R/W
PROPOSED T.C. @ 18' LT. OF ℄ (6" C.F.)
℄ X-GUTTER ~~0.60%~~ ~~0.50%~~
EXISTING GROUND @ ℄
PROPOSED FINISHED GRADE @ ℄
EXISTING GROUND @ RT. R/W
PROPOSED T.C. @ 18' RT. OF ℄ (6" C.F.)
0+92.36 B.C. (8"C.F.) 65.98 T.C. 64.98 ℄ 39' (6" C.F.)
1+00 BEGIN CURB TRANS 65.42 T.C. GUTTER ℄
1+36.11 65.31 T.C. 64.31 ℄ (1.9' 6" C.F.)
1+50 END C.F. TRANS 65.45 T.C. 64.45 ℄ (1.76 F.)
1+79.85 65.45 T.C. 64.45 ℄ (1.76 F.)
2+23.60 66.07 T.C. 65.07 ℄ (0.55 C.F.)
2+47.34 E.C.R. 66.19 T.C. 65.19 ℄ 65.3' (0" C.F.)
3+57.34 B.C.R. 66.44 T.C., 65.94 ℄
0+47.11 64.88 ℄ 38'
1+00 G.B. 63.20
2+70 G.B. 63.50
6+27.78 ℄ MUMFORD AVE 2+76.00 ℄ LYNCH LANE 68.02
2+20 ±4" MUMFORD AVE. STORM DRAIN
0+47.11 E.C.R. (6"C.F.) 64.55 T.C. 61.65 ℄ 38'
1+00 G.B. 63.20 T.C.
2+70 G.B. 63.50 T.C.
5+82.78 B.C.R. 67.79 T.C., 67.29 ℄
6+72.28 E.C.R. 68.39 T.C., 67.89 ℄
6+75 B.V.C. 68.35 T.C.
7+00 68.57 T.C.
7+25 M.V.C. 68.92 T.C.
7+50 69.41 T.C.
7+75 E.V.C. 70.03 T.C.
8+00 B.V.C. 70.12 T.C.
8+25 71.80 T.C.
8+50 M.V.C. 72.44 T.C.
8+75 73.56 T.C.
9+00 E.V.C. 74.85
100' V.C. P.I. = 68.65
100' V.C. P.I. = 72.10
6+75 B.V.C. 68.20
7+00 68.52
7+25 M.V.C. 68.87
7+50 69.36
7+75 E.V.C. 69.98
8+00 B.V.C. 70.67
8+25 71.42
8+50 M.V.C. 72.39
8+75 73.51
9+00 E.V.C. 74.36
100' V.C. P.I. = 68.60
100' V.C. P.I. 72.05
6+75 B.V.C. 68.35
7+00 68.57
7+25 M.V.C. 68.92
7+50 69.41
7+75 E.V.C. 70.03
8+00 B.V.C. 70.12
8+25 71.80
8+50 M.V.C. 72.44
8+75 73.56
9+00 E.V.C. 74.85
100' V.C. P.I. = 68.65
100' V.C. P.I. = 72.10
EXISTING GROUND @ LT. R/W
EXISTING GROUND @ ℄
EXISTING GROUND @ RT. R/W
IDENTICAL POINT
5.00%
5.50%
50' V.C. P.I. = 87.35
L = 54.90' ON CURB
L = 55.04' ON CURB
11+10 B.V.C. 86.10 T.C.
11+35 M.V.C. 87.07 T.C.
11+60 E.V.C. 87.99 T.C.
11+70.42 E.C.R. 87.94 T.C.
11+69.12 B.C.R. 87.59 T.C.
Δ/4 T.C.
10+50 G.B. 83.10 T.C.
10+50 G.B. 83.05
EXIST. GRD. @ R/W
50' V.C.
P.I. = 87.30
11+10 B.V.C. 86.05
11+35 M.V.C. 87.00
11+60 E.V.C. 87.90
11+70.42 E.C.R. 87.85
11+69.12 B.C.R. 87.50
0.54%
0.41%
0.40%
0.75%
12+25.54 ℄ MUMFORD AVENUE 11+11.00 ℄ ARIZONA AVENUE 87.76
785 LT.
785 ℄
785 RT.
PROFILE SCALE HORIZONTAL 1"=40' VERTICAL 1"=4'
0 1 2 3 4 5 6 7 8 9 10 11 12

~~PITCHER PLACE~~ FAIR COVE LN.
SEE SHEET NO. 5
TRANSITION CURB FACE ~~8"C.F. to 6"C.F.~~
~~50' CURB TRANS~~
0+92.36 B.C. (8"C.F.) BEGIN CURB TRANSITION 1"=20'
0+45.00 B.C.R.
2+47.34 E.C.R. (6"C.F.) END CURB TRANSITION
3+57.34 B.C.R.
0+45.00 E.C.R.
N 56°06'30" E
TYP
TRACT ~~8898~~ 18574
~~TRACT BOUNDARY~~
6+27.78 ℄ MUMFORD AVENUE
2+76.00 ℄ LYNCH LANE
SEE SHEET NO. 3
ARIZONA AVE.
40' 10' 20' 20' 8'
11+70.42 E.C.R.
11+69.12 B.C.R.
12+25.54 ℄ MUMFORD AVENUE 11+11.00 ℄ ARIZONA AVENUE
MUMFORD AVENUE
N 33°53'30" W
312.34'
627.78'
873.20'
597.76'
69.00' 65.59' 68.64' 80.98'
10+65.89 B.C.R.
2+31.00 E.C.R.
2+31.00 B.C.R.
6+72.78 E.C.R.
5+82.78 B.C.R.
10+58.13 E.C.R.
11+70.67 B.C.R.
N 55°56'30" E
N 55°56'89" E
TRACT ~~8898-3~~ 18574
TRACT ~~8898-5~~ 18574
TRACT ~~8898-4~~ 18574
L=40.25' R=25.81' N 23°53'30" W 32.19' 19.86'
L=41.01' R=26.31' N 56°06'30" E 42.31'
L=41.01' R=26.31' N 33°53'30" W 42.31'
L=41.01' R=26.31' N 56°06'30" E 42.31'
TRANS. CURB FACE FRONT 8"H.6"
TRACT BOUNDRY JOINT EXIST. IMP. PER TR. 8898-2 (R-2087)
REMOVE EXIST. REDWOOD HEADER & BARRICADE
9+73.00
MILLARD DRIVE
SEE SHEET No. 3
38 typ. 30 31 29 37 28 36 35 27 26 34 25 33 24 32 31 23 X 30 2 29 3 28 4 27 5 26 6 25 7 24 23 8
1 2 3 4 5 6 7 8 9 10 11 12 13 14 15 16 17 22

CURVE DATA				
No	R	Δ	L	T
⑤	98.00'	~~10°00'00"~~ 10°00'00"	~~17.45'~~ 17.45'	~~8.77'~~ 8.77'
⑥	61.00'	~~110°36'00"~~ 110°36'00"	~~117.75'~~ 117.75'	~~93.78'~~ ~~87.33'~~ 93.78' 87.33'
⑦	100.00'	10°00'00"	17.45'	8.75'
⑧	96.00'	93°08'00"	72.36'	46.11'

CURB RETURN DATA				
No	R	Δ	L	T
①	27.00'	90°00'00"	42.41'	27.00'
②	27.00'	90°08'00"	42.47'	27.06'
③	35.00'	90°01'51"	55.06	35.08'
④	35.00'	89°52'09"	54.90'	34.92'

LYNCH LANE
SEE SHEET NO. 5

PACIFIC TELEPHONE ⚠2
APPROVED BY:
R. D. Vest 6-19-81
PUBLIC IMPROVEMENT ENGINEER DATE

PLANS CHECKED AND FOUND TO COMPLY WITH CITY OF RIVERSIDE REQUIREMENTS
Approved by:
Max Sloan RCE 10354 2-24-81
BERRYMAN & STEPHENSON INC. date

BENCH MARK: P.D. P.K. NAIL AND TAG IN N'LY CEMENT BANK OF R.W.C. CANAL E'LY SIDE FILLMORE ST. ELEV. 797.286

* AS BUILT 3-14-85 BRET!

J. F. DAVIDSON ASSOCIATES
CIVIL ENGINEERS - SURVEYORS - PLANNERS
RIVERSIDE, CALIFORNIA
APPROVED BY Jack W Canty DATE 8/24/77
R.E. No. 17,550
W.O. 5057 FOR: Murray Dev. Co. F.B.

MARK	REVISIONS	APPR.	DATE
⚠	REVISED PROFILE GRADES & ELEVS PER RP. BOUNDRY ON MILLARD DR., REV. CURVE DATA	WLL	7-14-83
⚠	REVISED ST. NAME - FAIR COVE LN. TO ~~PITCHER PLACE~~	WLL	2-16-83
⚠	Revised Tract No. & Lot Nos. - TR 18574	WLL	6-1-82
⚠	Added Exist. Tel. Cable, Arizona Ave.	WLL	9-7-81
⚠	Delineated Phase Bdry. & Renumbered Lots	WLL	5-10-81

DESIGNED BY C.H. DRAWN BY B.M. CHECKED BY C.H.

CITY OF RIVERSIDE, CALIFORNIA
DEPARTMENT OF PUBLIC WORKS

APPROVED BY	BY	DATE
PRINCIPAL ENGINEER		
PARK DEPARTMENT		
TRAFFIC DIVISION		
CHIEF P. W. ENGR.		

APPROVED BY DIRECTOR OF PUBLIC WORKS
DATE 4/3/81

STREET PLANS & PROFILE
TRACT No. ~~8898-3~~ 18574 ⚠
MUMFORD AVENUE
HORIZ. SCALE: 1" = 40' VERT. SCALE: 1" = 4'

PROJECT NO. R-2317
SHEET 2 OF 5
FILE NO. 5546

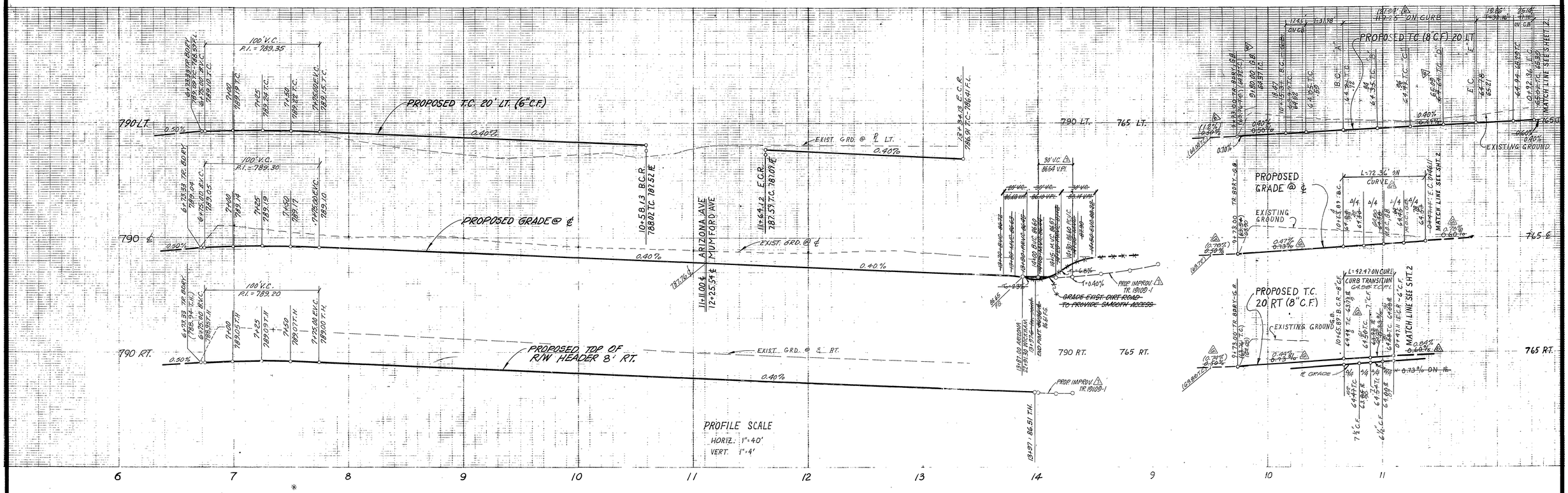

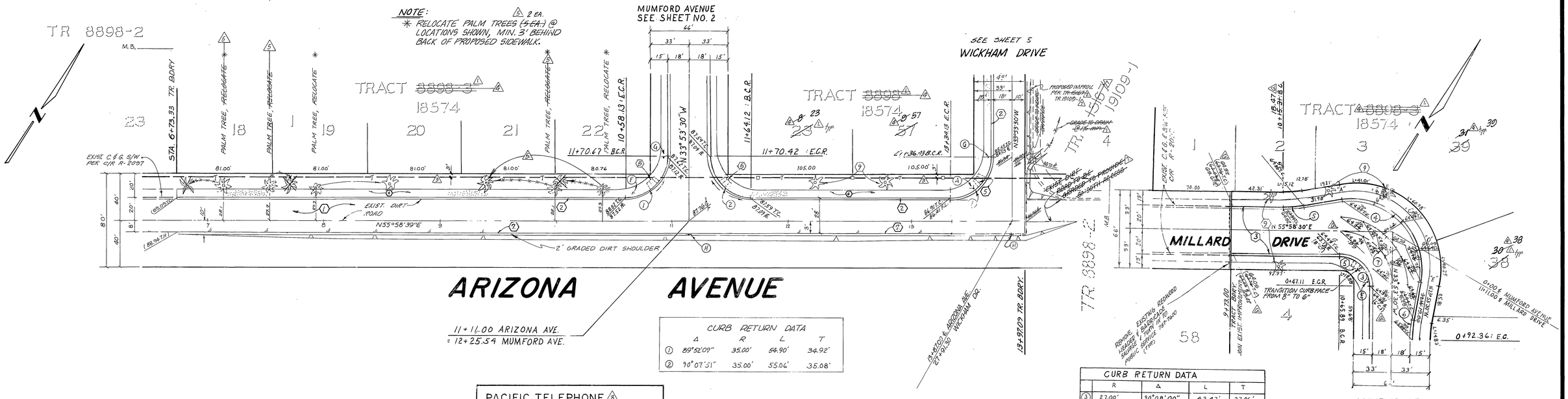

CURB RETURN DATA				
	Δ	R	L	T
①	89°52'09"	35.00'	54.90'	34.92'
②	90°07'51"	35.00'	55.06'	35.08'

CURB RETURN DATA				
	R	Δ	L	T
③	27.00'	90°08'00"	42.47'	27.06'
④	61.00'	~~46°08'28"~~ 45°58'00"	~~49.12'~~ 48.93'	~~26.02'~~ 25.58'
⑤	100.00'	10°00'00"	17.45'	8.75'
⑥	~~78.00~~ 80.00'	~~12°00'08"~~ 12°00'00"	~~16.34'~~ 16.76'	~~8.57'~~ 8.41'
⑦	46.00'	90°08'00"	72.36'	46.11'

BENCH MARK: FD PK NAIL & TAG IN N'LY CEMENT BANK OF R.W.C. CANAL E'LY SIDE FILLMORE ST. ELEV. 797.286

* AS BUILT 3-14-85 BRET!

Contractor agrees that he shall assume sole and complete responsibility for job site conditions during the course of construction of this Project, including safety of all persons and property; that this requirement shall apply continuously and not be limited to normal working hours; and that the Contractor shall defend, indemnify and hold the Owner and the Engineer harmless from any and all liability, real or alleged, in connection with the performance of work on this Project, excepting for liability arising from the sole negligence of the Owner or the Engineer.

PACIFIC TELEPHONE ⚠2
APPROVED BY:
PUBLIC IMPROVEMENT ENGINEER — DATE 6-18-81

PLANS CHECKED AND FOUND TO COMPLY WITH CITY OF RIVERSIDE REQUIREMENTS
Approved by:
BERRYMAN & STEPHENSON INC. date 2-24-81

J. F. DAVIDSON ASSOCIATES
CIVIL ENGINEERS - SURVEYORS - PLANNERS
RIVERSIDE, CALIFORNIA
APPROVED BY ____ DATE 1-4-81
R.E. No. 17550
W.O. 5067 FOR: Murray Dev. Co. F.B.

SEE SHEET 1 FOR CONSTRUCTION NOTES

MARK	REVISIONS	BY	DATE
⚠1	REV. ARIZONA AVE PER PROP TR 19109-1	WLK	9/21/84
⚠2	REVISED PROFILE GRADES & ALIGN. MILLARD DR. PER AS-BUILT & TRACT REC.	WLK	3-14-85
⚠3	REVISED PALM TREE RELOCATIONS	WLK	4-2-81
⚠4	Revised Tract No.'s & Lot Nos. - TR 18574	WLK	4-9-81
⚠5	Added Exist Tel. Cable, Arizona Ave.	WLK	5-11-81
⚠6	Designated Prop. Tr 15167 Improvements	WLK	5-14-81
⚠7	Delineated Phase Bdry & Renumbered Lots	WLK	5-14-81

DESIGNED BY O.H. DRAWN BY B.M. CHECKED BY O.H.

CITY OF RIVERSIDE, CALIFORNIA
DEPARTMENT OF PUBLIC WORKS

APPROVED BY	BY	DATE
PRINCIPAL ENGINEER		
PARK DEPARTMENT		
TRAFFIC DIVISION		
CHIEF P. W. ENGR.		

APPROVED BY: DIRECTOR OF PUBLIC WORKS
DATE 4/3/81

STREET PLANS & PROFILE
TRACT No. ~~8898-3~~ ⚠4 18574
ARIZONA AVENUE
MILLARD DRIVE
HORIZ. SCALE: 1" = 40' VERT. SCALE: 1" = 4'

PROJECT NO. R-2317
SHEET 3 OF 5
FILE NO. 5546

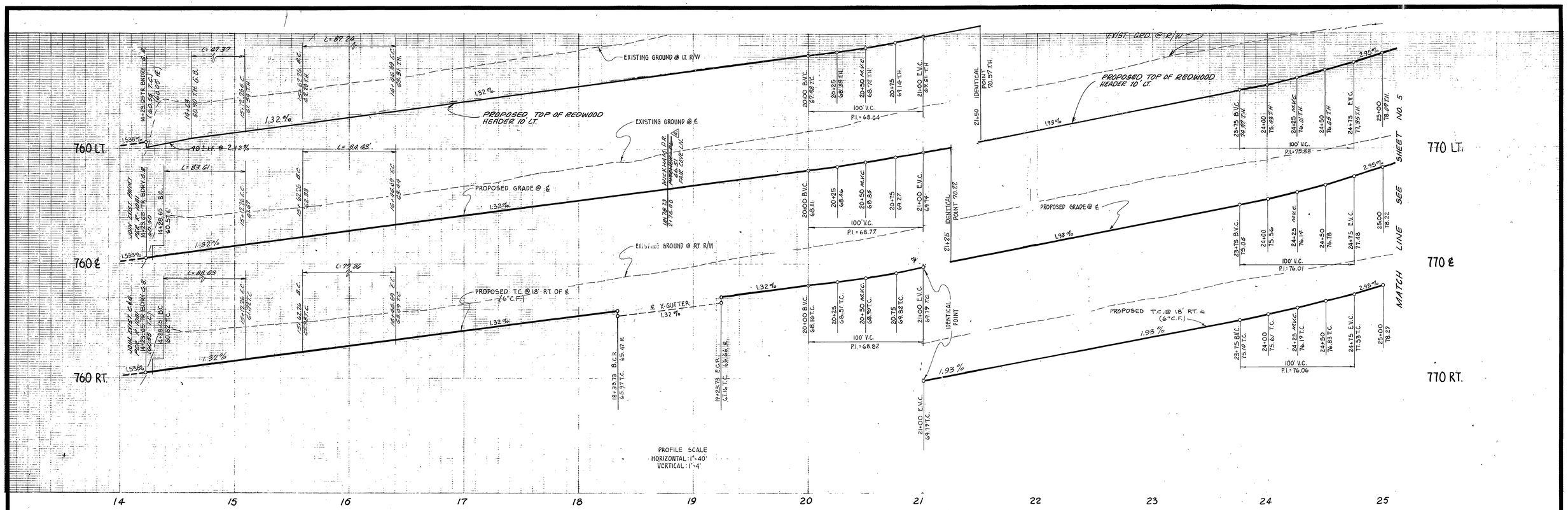

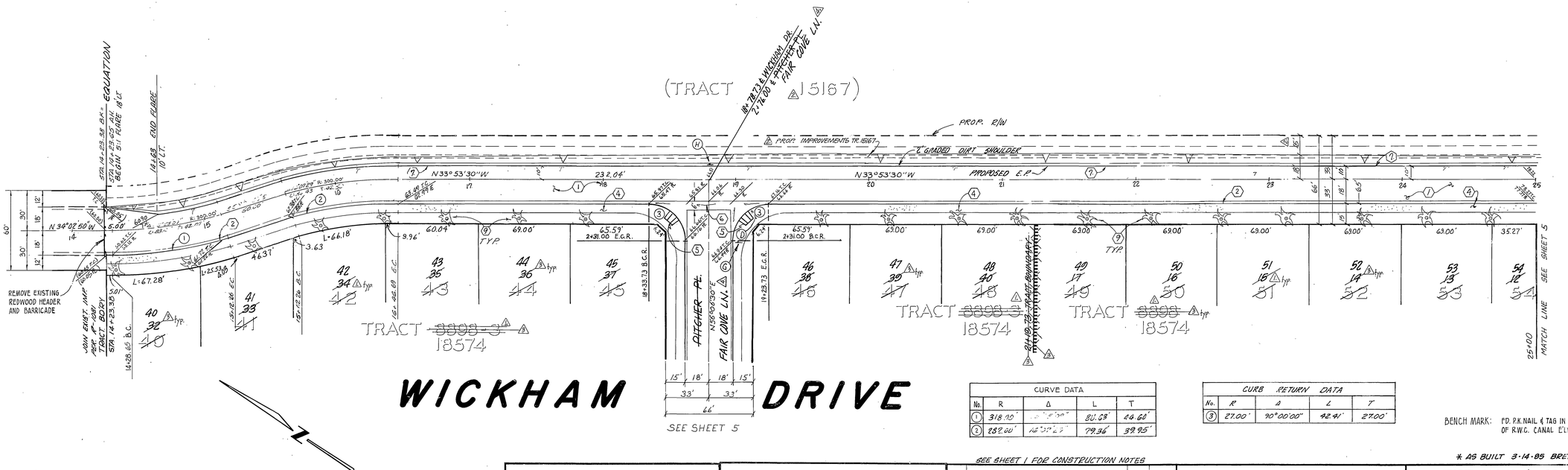

WICKHAM DRIVE

CURVE DATA				
No.	R	Δ	L	T
1	318.00'	[illegible]	80.63'	44.60'
2	282.00'	[illegible]	79.36'	39.95'

CURB RETURN DATA				
No.	R	Δ	L	T
3	27.00'	90°00'00"	42.41'	27.00'

BENCH MARK: FD. P.K. NAIL & TAG IN N'LY CEMENT BANK OF R.W.C. CANAL E'LY SIDE FILLMORE ST. ELEV. 797.286

SEE SHEET 1 FOR CONSTRUCTION NOTES

* AS BUILT 3-14-85 BRET!

Contractor agrees that he shall assume sole and complete responsibility for job site conditions during the course of construction of this Project, including safety of all persons and property; that this requirement shall apply continuously and not be limited to normal working hours; and that the Contractor shall defend, indemnify and hold the Owner and the Engineer harmless from any and all liability, real or alleged, in connection with the performance of work on this Project, excepting for liability arising from the sole negligence of the Owner or the Engineer.

PLANS CHECKED AND FOUND TO COMPLY WITH CITY OF RIVERSIDE REQUIREMENTS
Approved by:
Max Sloan RCE 10354 2-24-81
BERRYMAN & STEPHENSON INC. date

J. F. DAVIDSON ASSOCIATES
CIVIL ENGINEERS - SURVEYORS - PLANNERS
RIVERSIDE, CALIFORNIA
APPROVED BY [signature] DATE 2-4-81
R.E. No. 17550
W.O. 5057 FOR: Murray Dev. Co. F.B.

MARK	REVISIONS	APPR.	DATE
4	REVISED ST. NAME - FAIR COVE LN.		2-15-83
3	Revised Tract No. & Lot Nos. - TR. 18574		6-1-82
2	Designated Prop. Tr. 15167 Improvements		
1	Delineated Phase Bdry. & Renumbered Lots		5-14-81

DESIGNED BY C.H. DRAWN BY B.M. CHECKED BY C.H.

CITY OF RIVERSIDE, CALIFORNIA
DEPARTMENT OF PUBLIC WORKS

APPROVED BY	BY	DATE
PRINCIPAL ENGINEER		
PARK DEPARTMENT		
TRAFFIC DIVISION		3/17/81
CHIEF P. W. ENGR.		4-2 3-19-81

APPROVED BY [signature]
DIRECTOR OF PUBLIC WORKS
DATE 4/3/81

STREET PLANS & PROFILE
TRACT No. ~~8898-3~~ 18574
WICKHAM DRIVE
HORIZ. SCALE: 1" = 40' VERT. SCALE: 1" = 4'

PROJECT NO. R-2317
SHEET 4 OF 5
FILE NO. 5546

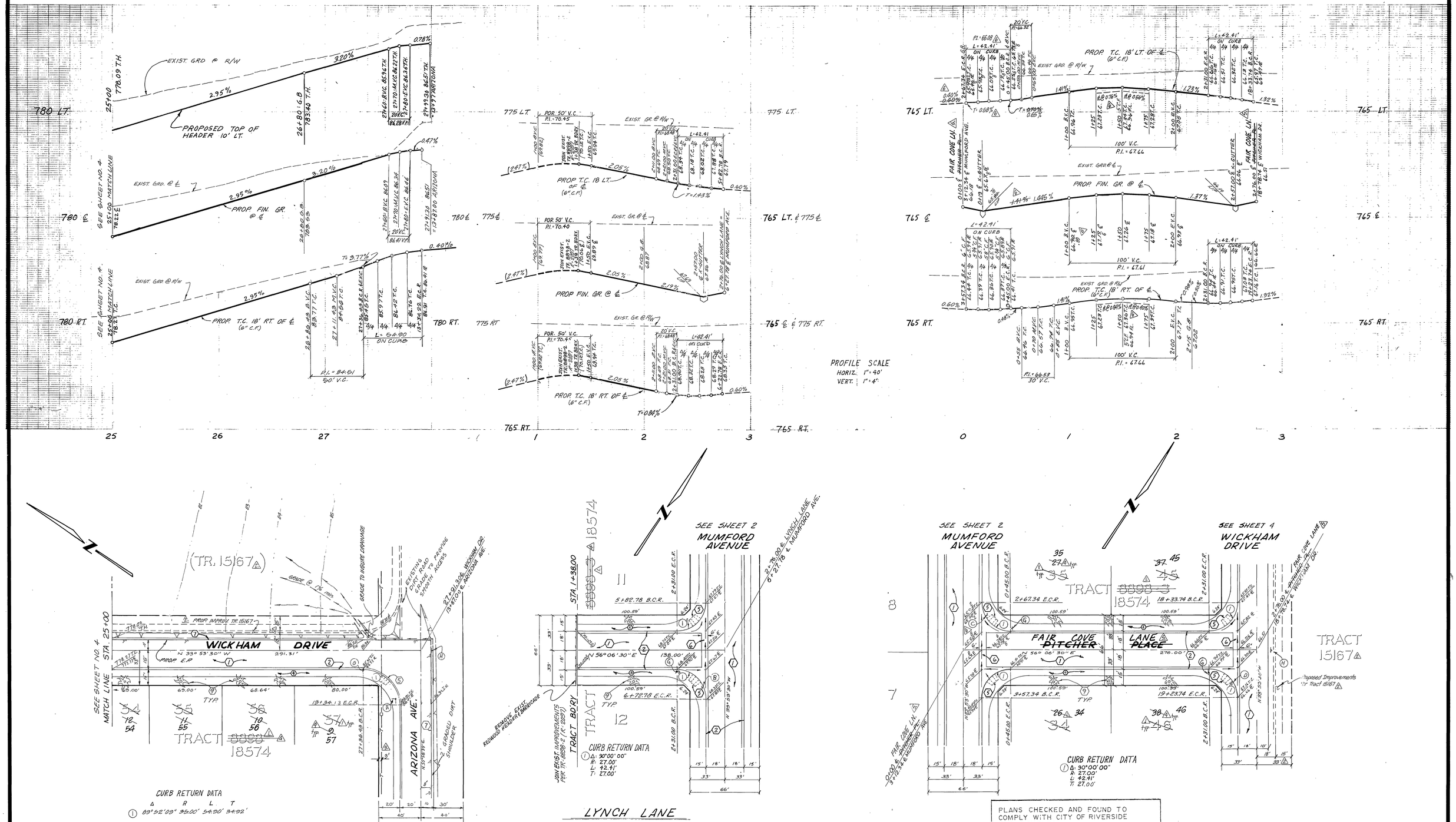

PLANS CHECKED AND FOUND TO COMPLY WITH CITY OF RIVERSIDE REQUIREMENTS
Approved by:
Max Sloan RCE 10354 2-24-81
BERRYMAN & STEPHENSON INC. date

BENCH MARK: FD. P.K. NAIL AND TAG IN N'LY CEMENT BANK OF R.W.C. CANAL E'LY SIDE FILLMORE ST. ELEV. 797.286

* AS BUILT 3-14-85 BRET!

PACIFIC TELEPHONE
APPROVED BY:
H. L. Lint 6-18-81
PUBLIC IMPROVEMENT ENGINEER DATE

J. F. DAVIDSON ASSOCIATES
CIVIL ENGINEERS - SURVEYORS - PLANNERS
RIVERSIDE, CALIFORNIA
APPROVED BY: [signature] DATE 7/29/77
R.E. No. 17550
W.O. 5057 FOR: Murray Dev. Co. F.B.

MARK	REVISIONS	APPR.	DATE
1	REVISED TRAFFIC DRIVE LX COMPASS & ELEVS. ADD. RE-BUILT C.B.@ MILLARD DR.	WLH	7-1-83
2	REVISED ST. NAME - FAIR COVE LN. TO PITCHER PL.	WLH	8-9-83
3	Revised Tract No. & Lot Nos. - TR. 18574 M.S. 211/18 & 19	WLH	6-1-84
4	Added Exist. Td. Cable, Arizona Ave.	WLH	7-26-84
5	Designated Prop. Tr. 15167 Improvements	WLH	5-14-85
6	Delineated Phase, Bdry. & Renumbered Lots	WLH	6-14-85

DESIGNED BY C.H. DRAWN BY B.M. CHECKED BY C.H.

CITY OF RIVERSIDE, CALIFORNIA
DEPARTMENT OF PUBLIC WORKS

APPROVED BY	BY	DATE
PRINCIPAL ENGINEER		
PARK DEPARTMENT		
TRAFFIC DIVISION		
CHIEF P. W. ENGR.		

APPROVED BY [signature]
DIRECTOR OF PUBLIC WORKS
DATE 9/3/81

STREET PLANS & PROFILE
TRACT No. ~~8898-3~~ 18574
WICKHAM DR., LYNCH LN. FAIR COVE-PITCHER PLACE- LANE
HORIZ. SCALE: 1" = 40' VERT. SCALE: 1" = 4'

PROJECT NO. R-2317
SHEET 5 OF 5
FILE NO. 5546