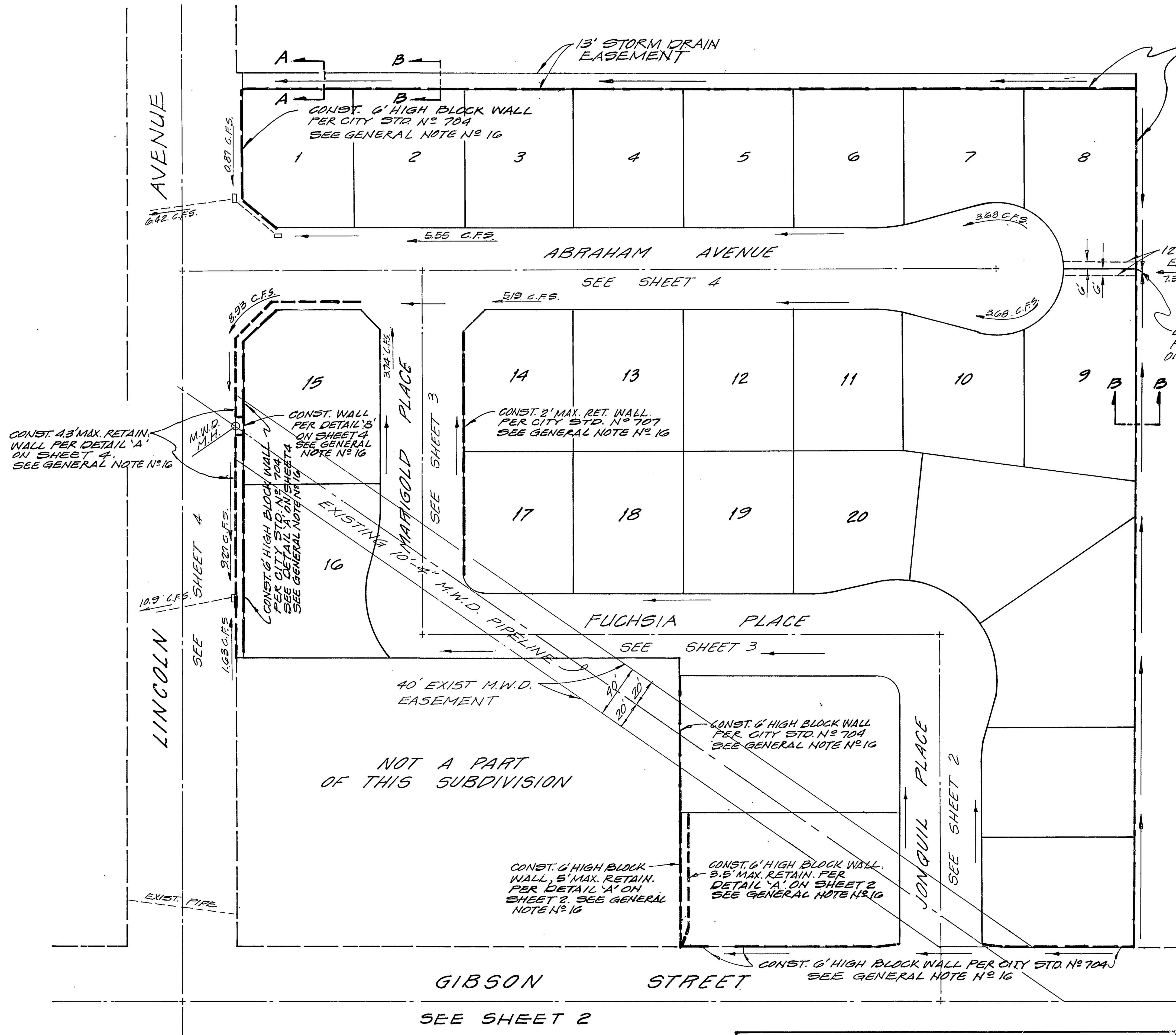

INDEX MAP

SCALE 1"=60'

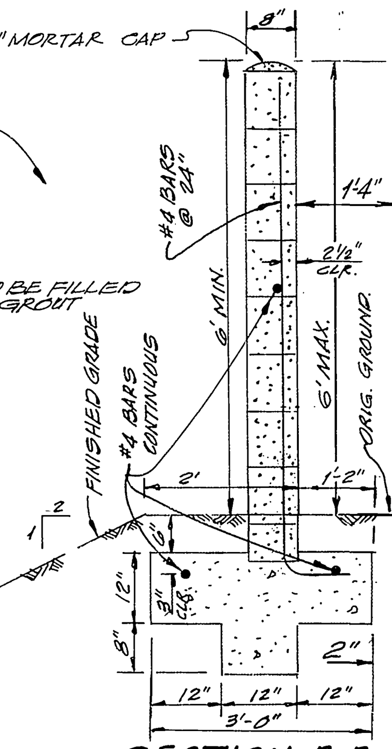

SECTION B-B

NOT TO SCALE

VICINITY MAP

NOT TO SCALE

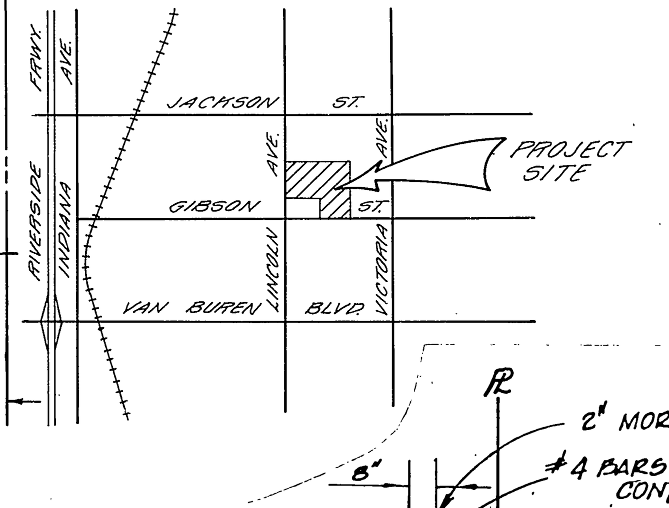

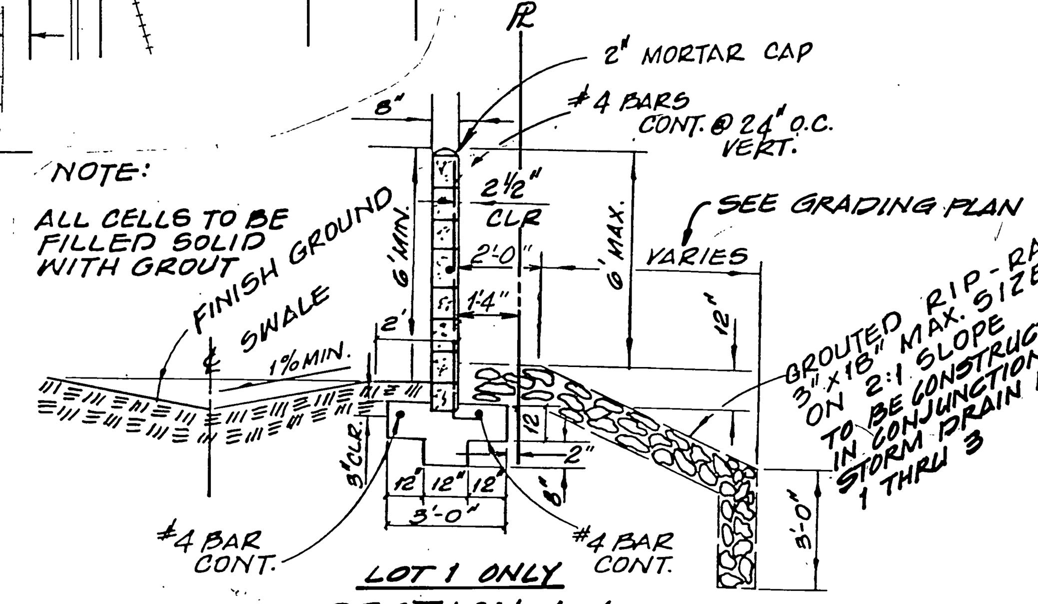

SECTION A-A

NOT TO SCALE

GENERAL NOTES

1. CONSTRUCTION SHALL BE IN ACCORDANCE WITH THE STANDARD SPECIFICATIONS FOR PUBLIC WORKS CONSTRUCTION 1979 EDITION AND PER CITY OF RIVERSIDE STANDARD DRAWINGS.
2. ALL FLAGGED ELEVATIONS SHALL BE STAKED IN THE FIELD BY THE ENGINEER.
3. TRIM EDGE OF EXISTING PAVEMENT WHERE NEW PAVEMENT JOINS TO A SMOOTH STRAIGHT LINE. CONSTRUCT MATCH UP PAVING AS SHOWN ON PLANS & OVERLAY PAVING AS DIRECTED IN FIELD TO PRODUCE A SMOOTH SECTION. ENGINEER ESTIMATES OVERLAY TO BE 95 TONS.
4. CONSTRUCT DRIVEWAY APPROACHES PER STD. DWG. 302. EXACT SIZE AND LOCATION TO BE DETERMINED AT THE TIME OF CONSTRUCTION AS APPROVED BY THE TRAFFIC ENGINEER.
5. CURB SHALL BE STAKED AT 25' INTERVALS AND 3' OFFSETS WHERE GRADES ARE 0.4% OR GREATER.
6. TRAFFIC CONTROL SIGNS MUST BE PLACED PRIOR TO OPENING STREETS TO TRAFFIC.
7. IT SHALL BE THE RESPONSIBLITY OF THE CONTRACTOR TO CLEAR THE RIGHT OF WAY IN ACCORDANCE WITH THE PROVISIONS OF LAW AS IT AFFECTS EACH UTILITY INCLUDING IRRIGATION LINES AND APPURTENANCES AND AT NO COST TO THE CITY.
8. SEE STREET LIGHTING PLANS FOR NUMBER AND LOCATION OF REQUIRED STREET LIGHTS.
9. EXIST. IRRIGATION FACILITIES TO BE REMOVED AS SHOWN ON PLAN, PLUG ALL OPEN ENDS WITH A CONCRETE PLUG.
10. 4" X 4" BLOCKOUTS FOR MAILBOXES REQUIRED IN CURB SIDEWALK.
11. ALL TESTING AND CERTIFICATION OF THE TREATED BASE WILL BE AT THE DEVELOPER'S COST.
12. DEVELOPER TO GIVE RIVERSIDE COUNTY FLOOD CONTROL 5 DAYS WRITTEN NOTICE PRIOR TO STARTING WORK ON STORM DRAIN, OR DOING ANY WORK WITHIN RIVERSIDE COUNTY FLOOD CONTROL EASEMENTS.
13. THE CONTRACTOR SHALL CONTACT THE PUBLIC WORKS DEPARTMENT TWO WEEKS PRIOR TO BEGINNING CONSTRUCTION TO NEGOTIATE THE COST OF THE CITY'S PORTION OF THE WORK.
14. IN ORDER TO COORDINATE THE CITY'S PORTION OF THE WORK, THE DEVELOPER SHALL GIVE THE CITY 60 DAYS' NOTICE IN ORDER THAT THE DEVELOPER'S AND THE CITY'S WORK MAY BE INSTALLED CONCURRENTLY. THE DEVELOPER SHALL PREPARE AND COMPACT ROUGH SUBGRADE (± .1') AND IS RESPONSIBLE FOR THE CONDITION OF THE SUBGRADE UNTIL ACCEPTED BY THE CITY AND UNTIL THE CITY'S CONTRACTOR STARTS WORKING. THE DEVELOPER IS ALSO RESPONSIBLE FOR BARRICADING DURING THIS TIME.
15. SEE LANDSCAPING AND SPRINKLER SYSTEM PLANS FOR PARKWAY ON LINCOLN AVE.
16. THIS WALL REQUIRES A PERMIT AND INSPECTION FROM THE PUBLIC WORKS ENGINEERING DIVISION.
17. THE DEVELOPER TO COORDINATE THE INSTALLATION OF ACCESS PAVING ON LINCOLN AVENUE WITH THE CITY CONSTRUCTION INSPECTOR. FINAL COURSE OF PAVING IN AREA OF ACCESS PAVING TO BE PAID FOR BY DEVELOPER.
18. ALL WALLS FACING PUBLIC R/W SHALL BE BUILT OF TAN SLUMPSTONE, ALL OTHER WALLS SHALL BE BUILT OF ORCO GOLD.

CONSTRUCTION NOTES

(1) CONSTRUCT P.C.C. CURB & GUTTER PER RIVERSIDE CITY STANDARD NO. 200 (6" C.F.)
(2) CONSTRUCT 6' P.C.C. CURB SIDEWALK PER RIVERSIDE CITY STANDARD NO. 325.
(3) CONSTRUCT P.C.C. CROSS GUTTER PER RIVERSIDE CITY STANDARD NO. 220. WIDTH SHOWN ON PLANS.
(4) CONSTRUCT A.C. PAVING PER TYPICAL SECTION.
(5) CONSTRUCT WHEEL CHAIR RAMP PER RIVERSIDE CITY STANDARD NO. 304.
(7) CONSTRUCT VARIABLE THICKNESS A.C. OVERLAY.
(8) TO BE RELOCATED BY OTHERS.
(9) PROTECT IN PLACE.
(10) ADJUST TO FINISHED GRADE.
(12) CONSTRUCT CATCH BASIN PER RIVERSIDE CITY STANDARD NO. 405. WIDTH AND DEPTH SHOWN ON PLANS.
(13) CONSTRUCT LOCAL DEPRESSION PER RIVERSIDE CITY STANDARD NO. 405.
(14) CONSTRUCT 18" RCP, 2000D.
(16) CONSTRUCT CURB OUTLET PER RIVERSIDE CITY STANDARD NO. 410.
(17) THIS WALL REQUIRES A PERMIT AND INSPECTION FROM THE PUBLIC WORKS ENGINEERING DIVISION.
(18) PLANT STREET TREES PER CITY OF RIVERSIDE PARKS & RECREATION DEPARTMENT STANDARDS.
(19) Developer To give City water Division Five (5) working Days written notice prior to start of construction and to allow City (10) working Days for completion of work (787-7611)

TREE PLANTING GENERAL NOTES

1. ALL RELATED WORK SHALL CONFORM TO THE CITY OF RIVERSIDE, PARK AND RECREATION DEPARTMENT STANDARDS.
2. CONTACT THE PARK PROJECTS INSPECTOR A MINIMUM OF 48 HOURS IN ADVANCE AT 787-7223 TO SCHEDULE INSPECTIONS. INSPECTIONS SHALL BE REQUIRED: A) WHEN PLANT LOCATIONS HAVE BEEN SPOTTED IN THE FIELD PRIOR TO DIGGING PLANT PITS, B) WHILE DIGGING PLANT PITS AND PLANTING/ RELOCATING TREES, C) AFTER PLANTING AND ALL OTHER INDICATED OR SPECIFIED WORK HAS BEEN COMPLETED FOR START OF MAINTENANCE, AND D) AT END OF MAINTENANCE/FINAL ACCEPTANCE (CONTRACTOR/DEVELOPER WILL BE RELEASED FROM MAINTENANCE ONLY UPON RECEIPT OF WRITTEN NOTIFICATION FROM THE CITY THAT THE PARK AND RECREATION DEPARTMENT IS ASSUMING MAINTENANCE RESPONSIBILITIES).
3. THE CONTRACTOR/DEVELOPER SHALL MAINTAIN ALL PLANTINGS FOR A MINIMUM PERIOD OF ONE (1) YEAR.
4. STREET TREE PLANTING SHALL BE AS FOLLOWS:

	STREET NAME	BOTANICAL NAME/COMMON NAME	MIN. SIZE	APPROX. SPACING
A.	ABRAHAM AVE.	MAGNOLIA GRANDIFLORA SOUTHERN MAGNOLIA	15 GAL.	50' O.C.
B.	LINCOLN AVE.	SEE REVERSE FRONTAGE IMPROVEMENT PLANS #A 1105 DATED 8-25-80 AS PREPARED BY D.W. GILLESPIE & ASSOC.		
C.	MARIGOLD PLACE	LIQUIDAMBAR STYRACIFLUA SWEETGUM	15 GAL.	50' O.C.
D.	FUCHSIA PLACE	FRAXINUS VELUTINA GLABRA MODESTO ASH	15 GAL.	50' O.C.
E.	JONQUIL PLACE	LIQUIDAMBAR STYRACIFLUA SWEETGUM	15 GAL.	50' O.C.
F.	GIBSON STREET	LAGERSTROEMIA INDICA CRAPE MYRTLE	15 GAL.	50' O.C.

TRAFFIC & STREET NAME SIGN SCHEDULE

Nº	DESCRIPTION		
A	R1 (STOP SIGN) 30" OCTAGON		
B	W53 (NOT A THROUGH STREET) 24" x 24"		
C	JONQUIL	PLACE	2800
	GIBSON	STREET	2800
D	JONQUIL	PLACE	2800
	FUCHSIA	PLACE	2800
E	MARIGOLD	PLACE	2800
	FUCHSIA	PLACE	2800
F	MARIGOLD	PLACE	2800
	ABRAHAM	AVENUE	2800
G	LINCOLN	AVENUE	9200
	ABRAHAM	AVENUE	2800

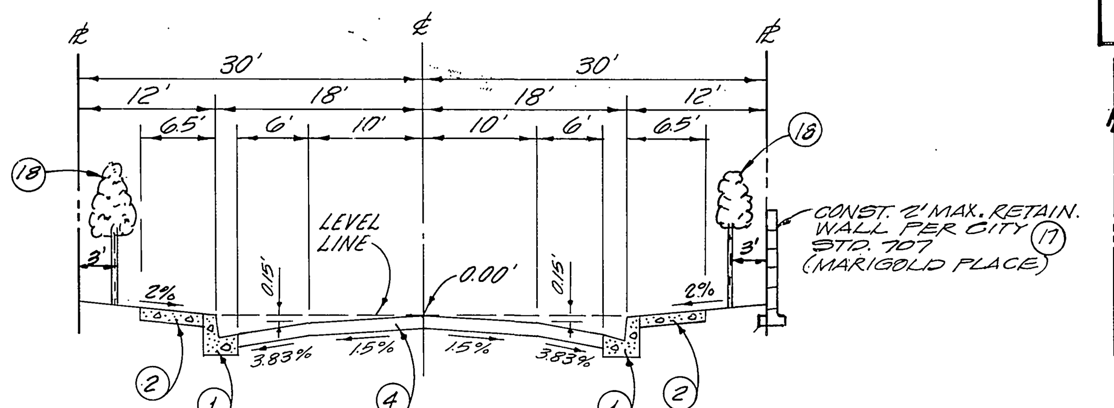

△ 2½" 3" A.C. OVER 4" D.G. BASE CRUSHED AGGREGATE BASE OR 4" AC OVER COMPACTED NATIVE PER S.R. Nº 1083 (REVISED 6-23-83)

TYPICAL SECTION

NOT TO SCALE

ABRAHAM AVENUE
MARIGOLD PLACE
FUCHSIA PLACE
JONQUIL PLACE

T.I. = 5

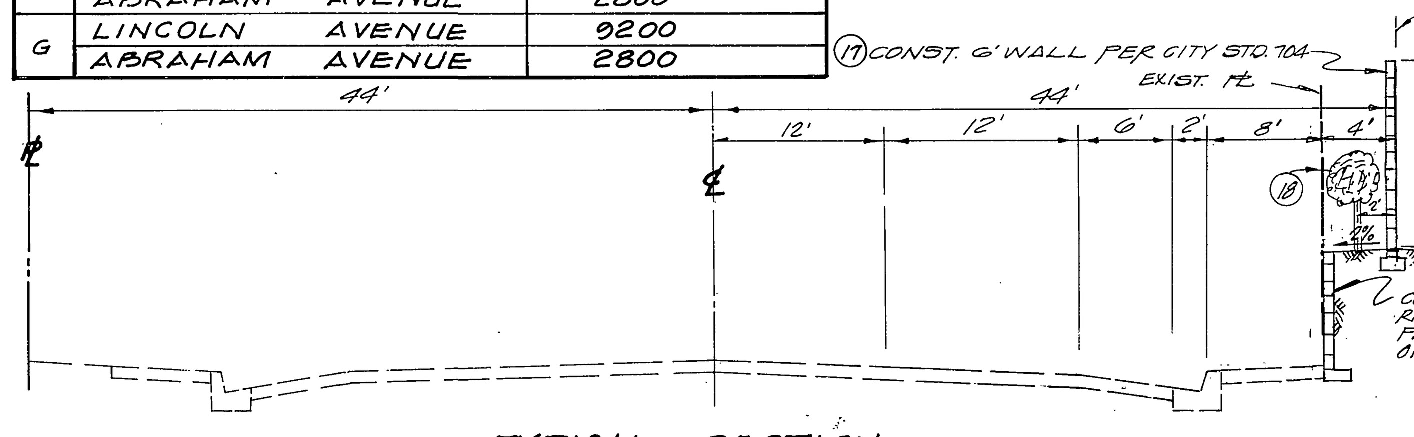

TYPICAL SECTION

NOT TO SCALE

LINCOLN AVENUE

FOR CONSTRUCTION OF THIS STREET SEE STREET IMPROVEMENT PLANS FOR TRACT Nº 8716-1 R-2333 T.I. = 7

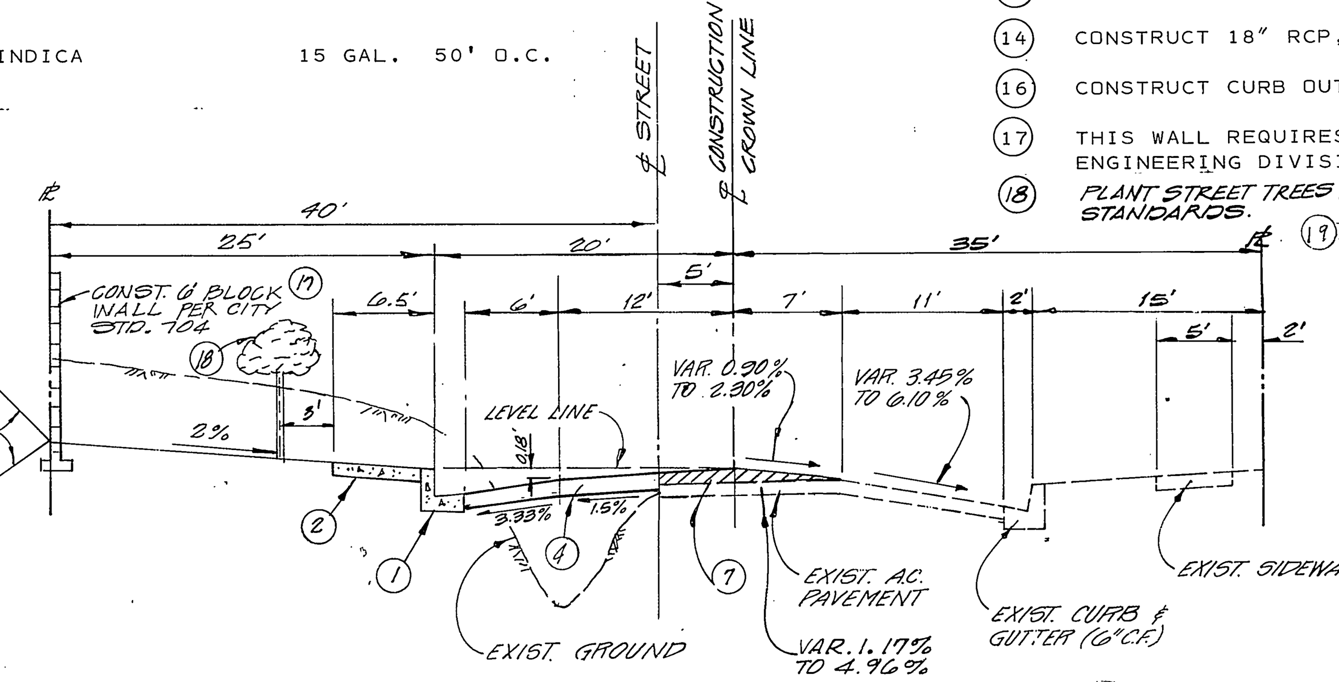

TYPICAL SECTION

NOT TO SCALE

3" A.C. OVER 4" D.G. BASE CRUSHED AGGREGATE BASE △ PER S.R. Nº 1083 OR 5" AC OVER COMPACTED NATIVE

GIBSON STREET

T.I. = 6

PLANS CHECKED AND FOUND TO COMPLY WITH CITY OF RIVERSIDE REQUIREMENTS:
BY Max Sloan RCE 10354 9-24-80 (m.b. 9/11/80)
BERRYMAN & STEPHENSON INC. DATE

BENCH MARK

CITY BENCHMARK NO. E4-1 P.K. NAIL AND TAG IN NORTHEAST CORNER OF CONCRETE GUTTER ON NORTHERLY SIDE VICTORIA AVENUE 300' WESTERLY OF JACKSON STREET.
ELEVATION 871.412

NOTICE

THE PRIVATE ENGINEER SIGNING THESE PLANS IS RESPONSIBLE FOR ASSURING THE ACCURACY AND ACCEPTABILITY OF THE WORK HEREON. IN THE EVENT OF DISCREPANCIES ARISING DURING CONSTRUCTION AS A RESULT OF ERRORS OR OMISSIONS, THE PRIVATE ENGINEER SHALL BE RESPONSIBLE FOR DETERMINING AN ACCEPTABLE SOLUTION AND REVISING THE PLANS FOR APPROVAL BY THE CITY.

NOTICE TO CONTRACTOR

THE EXISTENCE AND LOCATION OF ANY UNDERGROUND UTILITY PIPES OR STRUCTURES SHOWN ON THESE PLANS ARE OBTAINED BY A SEARCH OF THE AVAILABLE RECORDS. TO THE BEST OF OUR KNOWLEDGE, THERE ARE NO EXISTING UTILITIES EXCEPT AS SHOWN ON THESE PLANS.

THE CONTRACTOR IS REQUIRED TO TAKE DUE PRECAUTIONARY MEASURES TO PROTECT THE UTILITY LINES SHOWN AND ANY OTHER LINES NOT OF RECORD OR NOT SHOWN ON THESE PLANS.

THE CONTRACTOR IS REQUIRED TO CALL METROPOLITAN WATER DISTRICT AT (213) 626-4282, EXT 432, ART KNOOT AT LEAST 2 WORKING DAYS PRIOR TO ANY WORK IN VICINITY OF METROPOLITANS' EASEMENT.

City of Riverside Domestic System ASt

Fred Lantz 10/29/80
WATER SYSTEMS MANAGER DATE

* AS BUILT 3-14-85 BRET!

PREPARED BY:
CLIFFORD A. FORKERT
22311 BROOKHURST ST. SUITE I
HUNTINGTON BEACH, CAL. 92646
TEL. (714) 963-6793

Clifford A. Forkert 8-18-80
R.C.E. 7211 DATE

MARK	REVISIONS	APPR.	DATE
△	REVISED PAVING SECTION BASED ON UPDATED SOILS REPORT. SR 1083 (REVISED) R=53 P.A.		7-1-83

DESIGNED BY G.A.S. DRAWN BY LCF CHECKED BY G.A.S.

CITY OF RIVERSIDE, CALIFORNIA
DEPARTMENT OF PUBLIC WORKS

APPROVED BY	BY	DATE
PRINCIPAL ENGINEER		
PARK DEPARTMENT		
TRAFFIC DIVISION		11/3/80
CHIEF P. W. ENGR.		12.18
PLANNING DEPT.		9.23.80

APPROVED BY [signature]
DIRECTOR OF PUBLIC WORKS
DATE 12/19/80

TRACT 8184-1
INDEX

SCALE: AS SHOWN

INDEXED BLD

PROJECT NO.
R-2334

SHEET 1 OF 4

FILE NO.

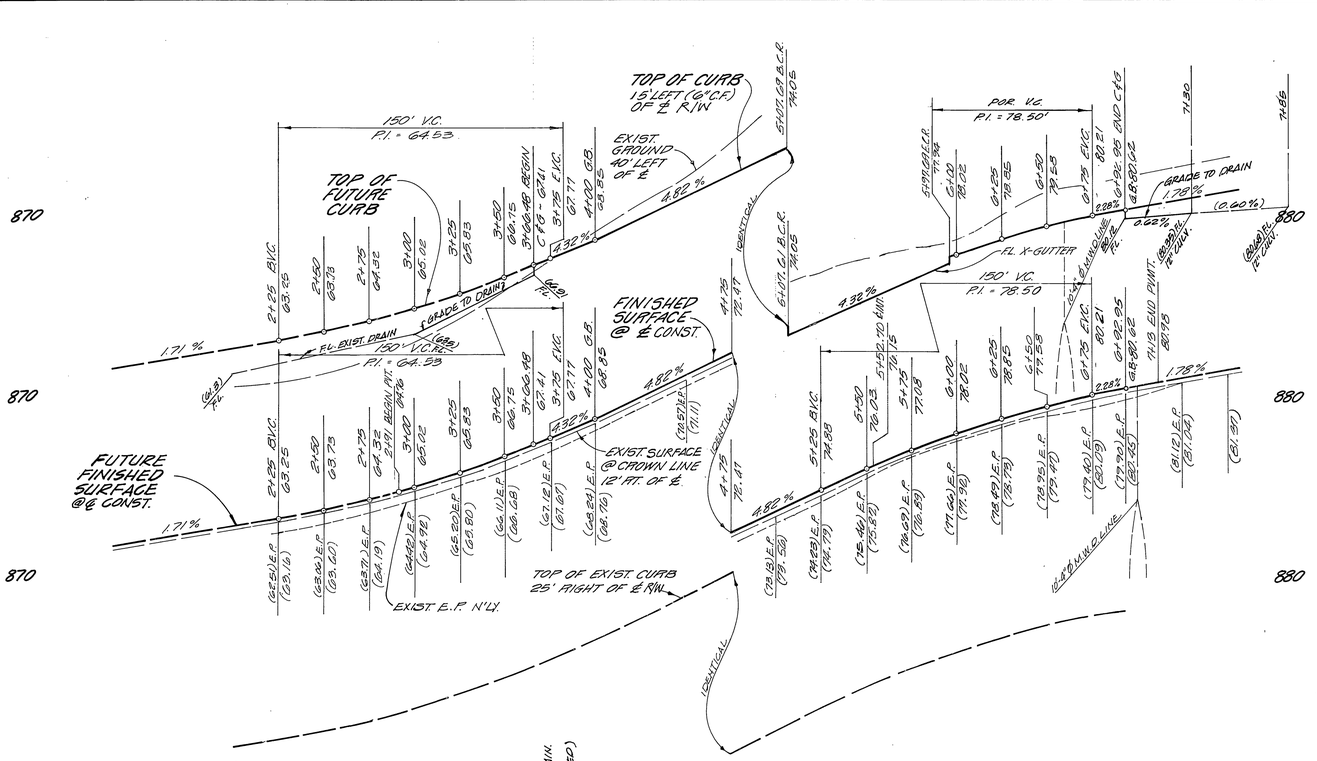

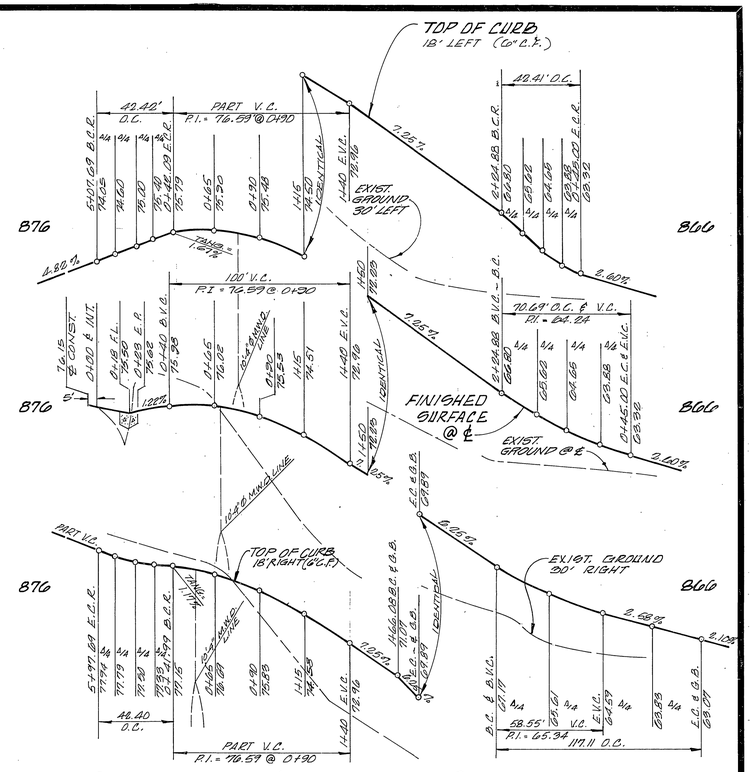

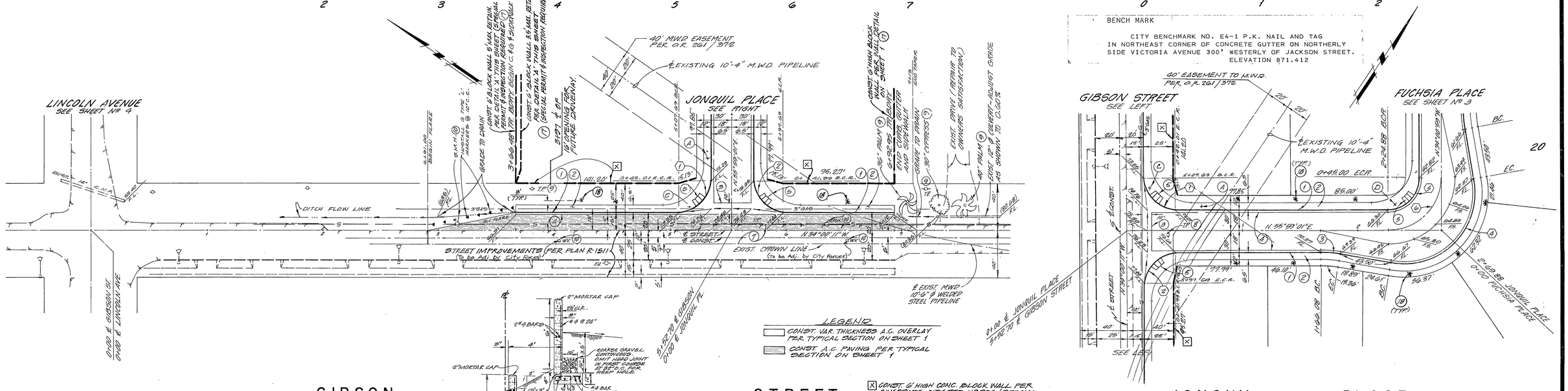

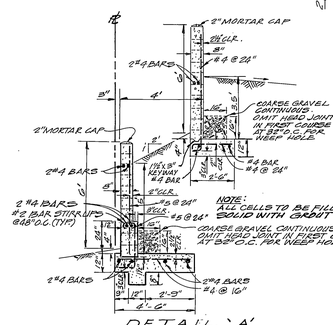

LEGEND

- CONST. VAR. THICKNESS A.C. OVERLAY PER TYPICAL SECTION ON SHEET 1
- CONST. A.C. PAVING PER TYPICAL SECTION ON SHEET 1

[X] CONST. 6' HIGH CONC. BLOCK WALL PER RIVERSIDE CITY STD. Nº 702A (SPECIAL PERMIT & INSPECTION REQUIRED FROM PUBLIC WORKS ENGINEERING DIVISION.

NOTE:
* INDICATES STREET TREE PLANTING SEE STREET TREE PLANTING GENERAL NOTES ON SHEET 1

NOTE
THE CONTRACTOR IS REQUIRED TO CALL METROPOLITAN WATER DISTRICT AT (213) 626-4282, EXT. 432, ART KNOOT AT LEAST 2 WORKING DAYS PRIOR TO ANY WORK IN VICINITY OF METROPOLITANS' EASEMENT.

BENCH MARK

CITY BENCHMARK NO. E4-1 P.K. NAIL AND TAG IN NORTHEAST CORNER OF CONCRETE GUTTER ON NORTHERLY SIDE VICTORIA AVENUE 300' WESTERLY OF JACKSON STREET. ELEVATION 871.412

NOTE:
SEE SHEET Nº 1 FOR GENERAL AND CONSTRUCTION NOTES.

CURB CURVE DATA

Nº	Δ	R	L	T
1	90°00'48"	27.00'	42.42'	27.01'
2	89°59'12"	27.00'	42.40'	26.99'
3	10°00'00"	100.00'	17.45'	8.75'
4	110°00'00"	61.00'	117.11'	87.12'
5	90°00'00"	27.00'	42.41'	27.00'
6	90°00'00"	45.00'	70.69'	45.00'

PLANS CHECKED AND FOUND TO COMPLY WITH CITY OF RIVERSIDE REQUIREMENTS
BY Max Sloan RCE 10354 9-24-80
BERRYMAN & STEPHENSON INC. DATE

PREPARED BY:
CLIFFORD A. FORKERT
22311 BROOKHURST ST. SUITE "I"
HUNTINGTON BEACH, CA. 92646
TEL. (714) 963-6793

R.C.E. 7211 DATE 8-18-80

MARK	REVISIONS	APPR.	DATE

DESIGNED BY B.L.S. DRAWN BY LCF CHECKED BY B.A.S.

CITY OF RIVERSIDE, CALIFORNIA
DEPARTMENT OF PUBLIC WORKS

APPROVED BY	BY	DATE
PRINCIPAL ENGINEER		9-17-80
PARK DEPARTMENT		10-7-80
TRAFFIC DIVISION		11-26-80
CHIEF P. W. ENGR.		12-18-80
PLANNING DEPT.		

APPROVED BY
DIRECTOR OF PUBLIC WORKS
DATE 12/19/80

STREET PLAN AND PROFILE
TRACT 8184-1
GIBSON STREET
JONQUIL PLACE

PROJECT NO. R-2334
SHEET 2 OF 4
HORIZ. SCALE: 1" = 40' VERT. SCALE: 1" = 4'
FILE NO.

So. Calif. Gas Co
Orm. Bowman
10-30-80

City of Riverside
Domestic System
Asst

Filed Lantz
Water Systems Manager
11/29/80
DATE

* AS BUILT 3-14-85 BRET!

INDEXED BLD

GIBSON STREET JONQUIL PLACE

GENERAL NOTES

1. Location of laterals to be determined in the field at the direction of the owner. Avoid conflict with proposed and/or existing facilities.
2. No finished floor elevation shall be less than 4' above the sewer flow line at point of connection without having a proper backwater valve installed in the lateral.
3. The contractor shall call in a location request to Underground Service Alert (USA), Phone No. 1-800-422-4133, two working days before digging. No construction permit issued by the Public Works Department involving excavation for underground facilities will be valid unless the applicant has been provided an inquiry identification number by USA.
4. In residential areas 6"x6" or 6" diameter blockouts for mailboxes are required in curb sidewalk 10" to 14" from curb face at the property line between adjacent residences. For mailboxes for business, mobilhome parks or apartment houses, developer to check with the U.S.P.S. for the number and location of mailboxes.
5. The private engineer preparing these plans shall be responsible for preserving or re-establishing and referencing survey monuments destroyed, disturbed or buried as a result of construction shown hereon.

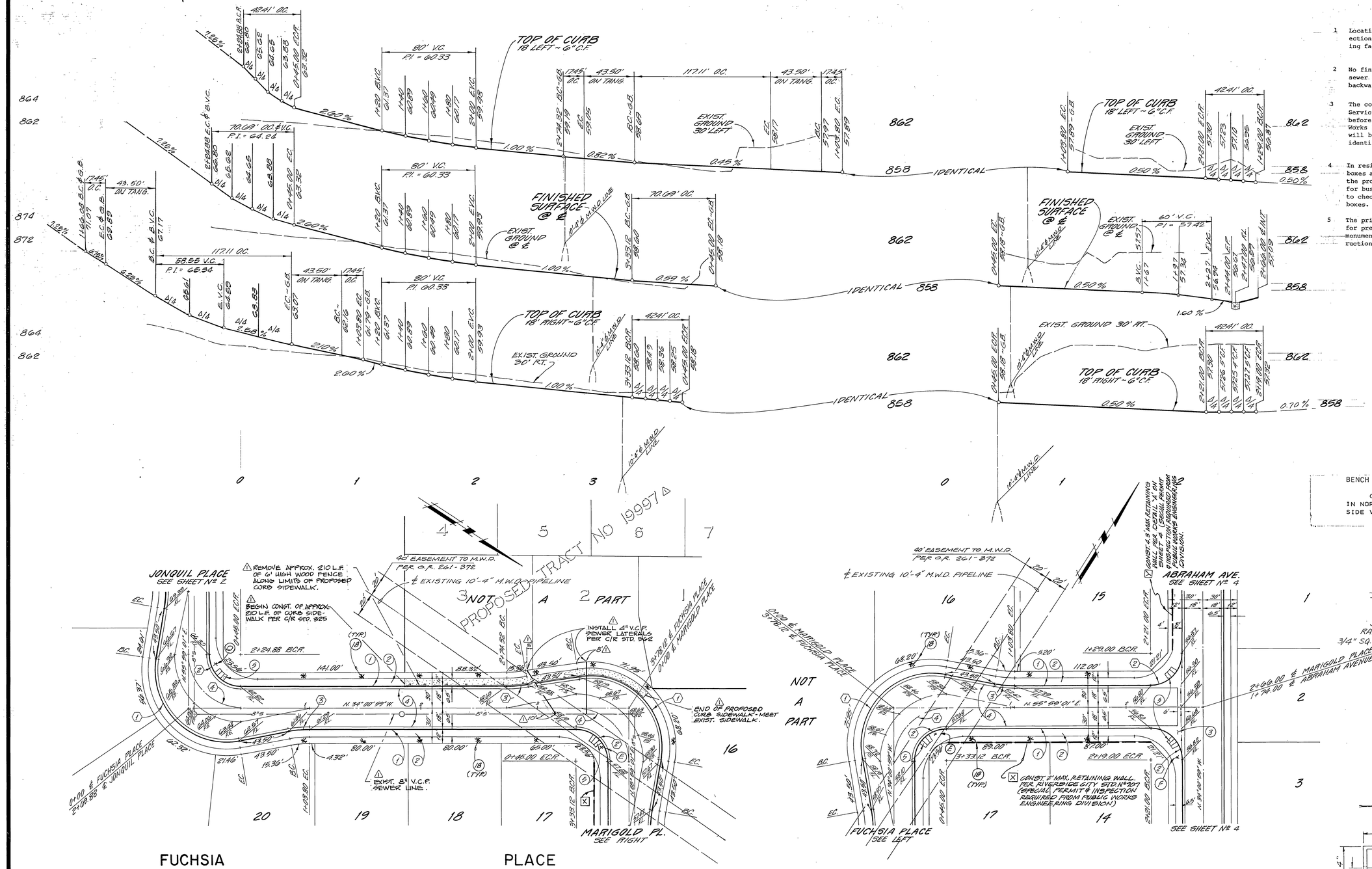

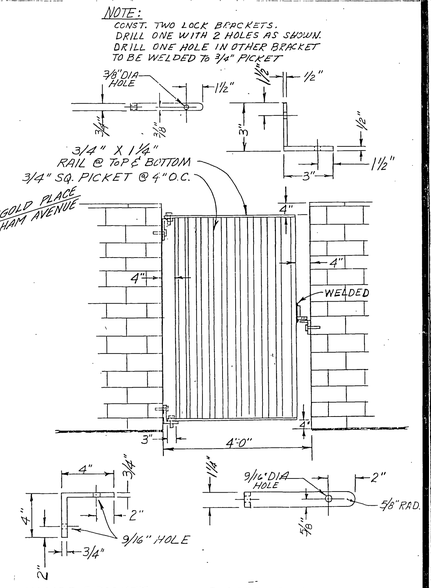

NOTE:
* INDICATES STREET TREE PLANTING SEE STREET TREE PLANTING GENERAL NOTE ON SHEET 1

NOTE:
SEE SHEET Nº 1 FOR GENERAL AND CONSTRUCTION NOTES

CURB CURVE DATA

Nº	Δ	R	L	T
1	110°00'00"	61.00'	117.11'	87.12'
2	90°00'00"	27.00'	42.41'	27.00'
3	10°00'00"	100.00'	17.45'	8.75'
4	90°00'00"	45.00'	70.69'	45.00'

MARIGOLD PLACE

* AS BUILT 3-14-85 BRET!

NOTE
THE CONTRACTOR IS REQUIRED TO CALL METROPOLITAN WATER DISTRICT AT (213) 626-4282, EXT. 432, ART KNOOT AT LEAST 2 WORKING DAYS PRIOR TO ANY WORK IN VICINITY OF METROPOLITANS' EASEMENT.

O.R. McGowan
So. Calif Gas Co.
10-28-80

R.P. Norasco
P.T.&T.
10-28-80

City of Riverside
Domestic Systems
Fred Lantz
Water Systems Manager
10/27/80 DATE

PLANS CHECKED AND FOUND TO COMPLY WITH CITY OF RIVERSIDE REQUIREMENTS.
BY Max Sloan RCE 10354 9-24-80
BERRYMAN & STEPHENSON INC. DATE

PREPARED BY:
CLIFFORD A. FORKERT
22311 BROOKHURST ST. SUITE "I"
HUNTINGTON BEACH, CA. 92646
TEL. (714) 963-6793
Clifford A. Forkert 8-18-80
R.C.E. 7211 DATE

J. F. DAVIDSON ASSOCIATES
CIVIL ENGINEERS - SURVEYORS - PLANNERS
RIVERSIDE - COLTON - PALM DESERT - TEMECULA
686-0844
APPROVED BY Ronald A. Lam R.E. No. 14312 DATE 5/18/84
JFD ASSOCIATES

MARK	REVISIONS	APPR.	DATE
1	REVISED TO SHOW CONSTRUCTION FOR CHMS PROPOSED TRACT No. 19997		

DESIGNED BY G.A.S. DRAWN BY L.C.P. CHECKED BY G.A.S.

CITY OF RIVERSIDE, CALIFORNIA
DEPARTMENT OF PUBLIC WORKS

APPROVED-BY	BY	DATE
PRINCIPAL ENGINEER	—	—
PARK DEPARTMENT	[illegible]	11/7/80
TRAFFIC DIVISION	[illegible]	11/6/80
CHIEF P. W. ENGR.	[illegible]	12-18
PLANNING DEPT.		

APPROVED BY
DIRECTOR OF PUBLIC WORKS
DATE 12/19/80

STREET PLAN AND PROFILE
TRACT 8184-1
MARIGOLD PLACE
FUCHSIA PLACE
HORIZ. SCALE: 1" = 40' VERT. SCALE: 1" = 4'

INDEXED ELO
PROJECT NO. R-2334
SHEET 3 OF 4
FILE NO.

NOTE: ℄ & SOUTH GRADE ARE BEING CONSTRUCTED PER TRACT 8716-1

BENCH MARK

CITY BENCHMARK NO. E4-1 P.K. NAIL AND TAG IN NORTHEAST CORNER OF CONCRETE GUTTER ON NORTHERLY SIDE VICTORIA AVENUE 300' WESTERLY OF JACKSON STREET. ELEVATION 871.412

NOTE:
- ☒ CONST. 6' HIGH CONC. BLOCK WALL PER RIVERSIDE CITY STD. Nº 704 (SPECIAL PERMIT & INSPECTION REQUIRED FROM PUBLIC WORKS ENGINEERING DIVISION)
- ☑ CONST. A 3' MAX. RETAINING WALL PER DETAIL 'A' THIS SHEET (SPECIAL PERMIT & INSPECTION REQUIRED FROM PUBLIC WORKS ENGINEERING DIVISION)

* INDICATES STREET TREE PLANTING: SEE STREET TREE PLANTING GENERAL NOTES ON SHEET 1

NOTE:
THE CONTRACTOR IS REQUIRED TO CALL METROPOLITAN WATER DISTRICT AT (213) 626-4282, EXT. 432, ART KNOOT AT LEAST 2 WORKING DAYS PRIOR TO ANY WORK IN VICINITY OF METROPOLITANS' EASEMENT.

NOTE:
SEE SHEET Nº 1 FOR GENERAL AND CONSTRUCTION NOTES.

* RELOCATED "NOT THROUGH ST." SIGN ON LIGHT POLE TO GET OUT OF RES. YARD.

CURB CURVE DATA

Nº	Δ	R	L	T
1	89°56'16"	35.00'	54.94'	34.96'
2	90°03'44"	35.00'	55.01'	35.04'
3	90°00'00"	27.00'	42.41'	27.00'
4	20°23'27"	115.00'	40.93'	20.68'
5	220°46'54"	40.00'	154.14'	~

PACIFIC TELEPHONE COMPANY.
W.R. Brown 10/30/80
ENGR MGR

City of Riverside Domestic Systems
Fred Lantz 10/29/80
Water Systems Manager — Date

PLANS CHECKED AND FOUND TO COMPLY WITH CITY OF RIVERSIDE REQUIREMENTS.
BY Max Sloan RCE 10354 9-24-80
BERRYMAN & STEPHENSON INC. — DATE

PREPARED BY:
CLIFFORD A. FORKERT
22311 BROOKHURST ST. SUITE "I"
HUNTINGTON BEACH, CA. 92646
TEL. (714) 963-6793

Stephen A. Forkert 8-18-80
R.C.E. 7211 — DATE

MARK	REVISIONS	APPR.	DATE
1	Moved S.D. from PP to CTR of 61' easmit	Wolf	12-22

DESIGNED BY G.A.S. DRAWN BY L.G.F. CHECKED BY G.A.S.

CITY OF RIVERSIDE, CALIFORNIA
DEPARTMENT OF PUBLIC WORKS

APPROVED BY	BY	DATE
PRINCIPAL ENGINEER		
PARK DEPARTMENT		
TRAFFIC DIVISION		
CHIEF P. W. ENGR.		
PLANNING DEPT.		

APPROVED BY
DIRECTOR OF PUBLIC WORKS
DATE 10/29/80

STREET PLAN AND PROFILE

TRACT 8184-1
LINCOLN AVENUE
ABRAHAM AVENUE

HORIZ. SCALE: 1" = 40' VERT. SCALE: 1" = 4'

PROJECT NO. R-2334
SHEET 4 OF 4
FILE NO.

* AS BUILT 9-14-85 BRET!