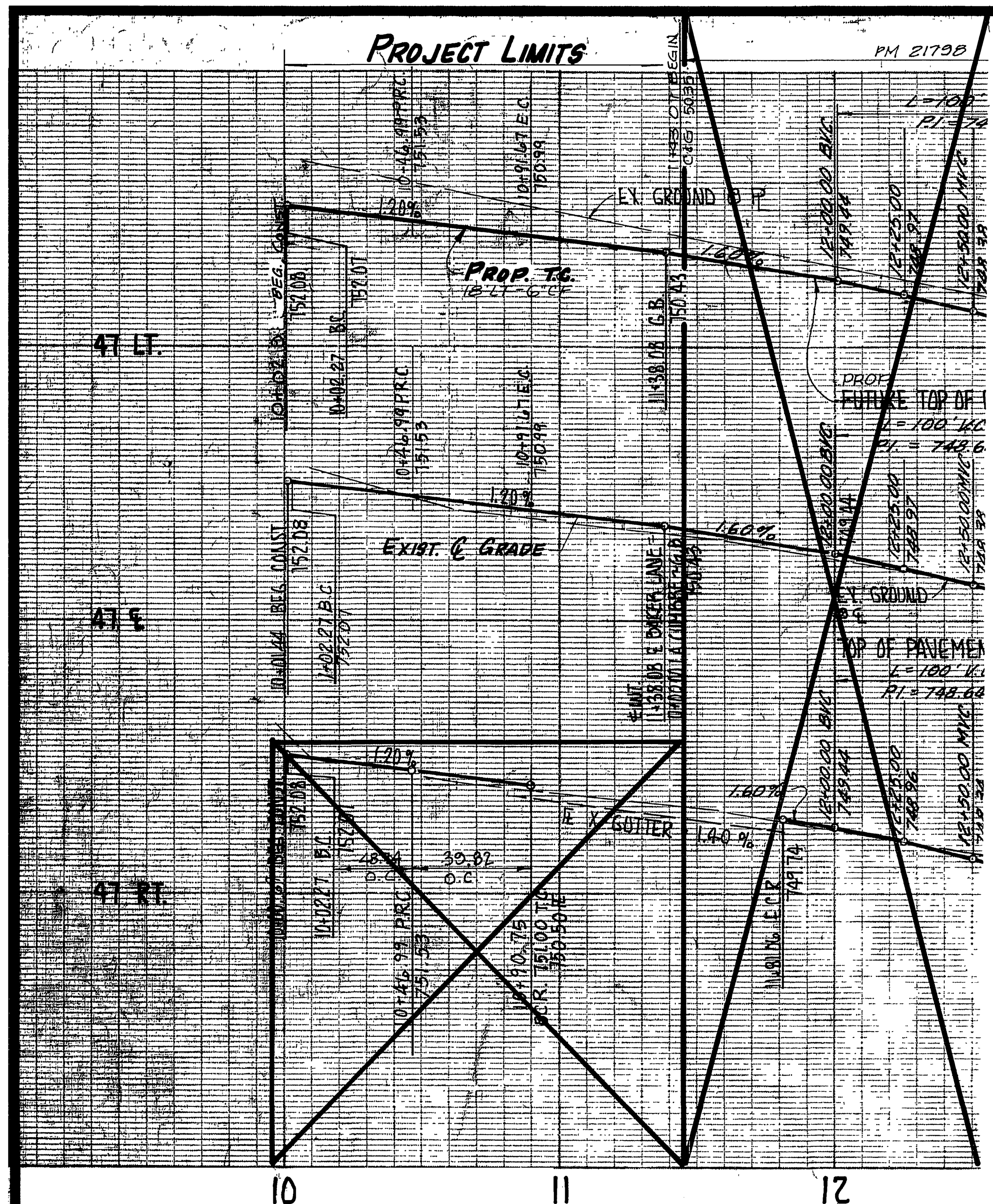

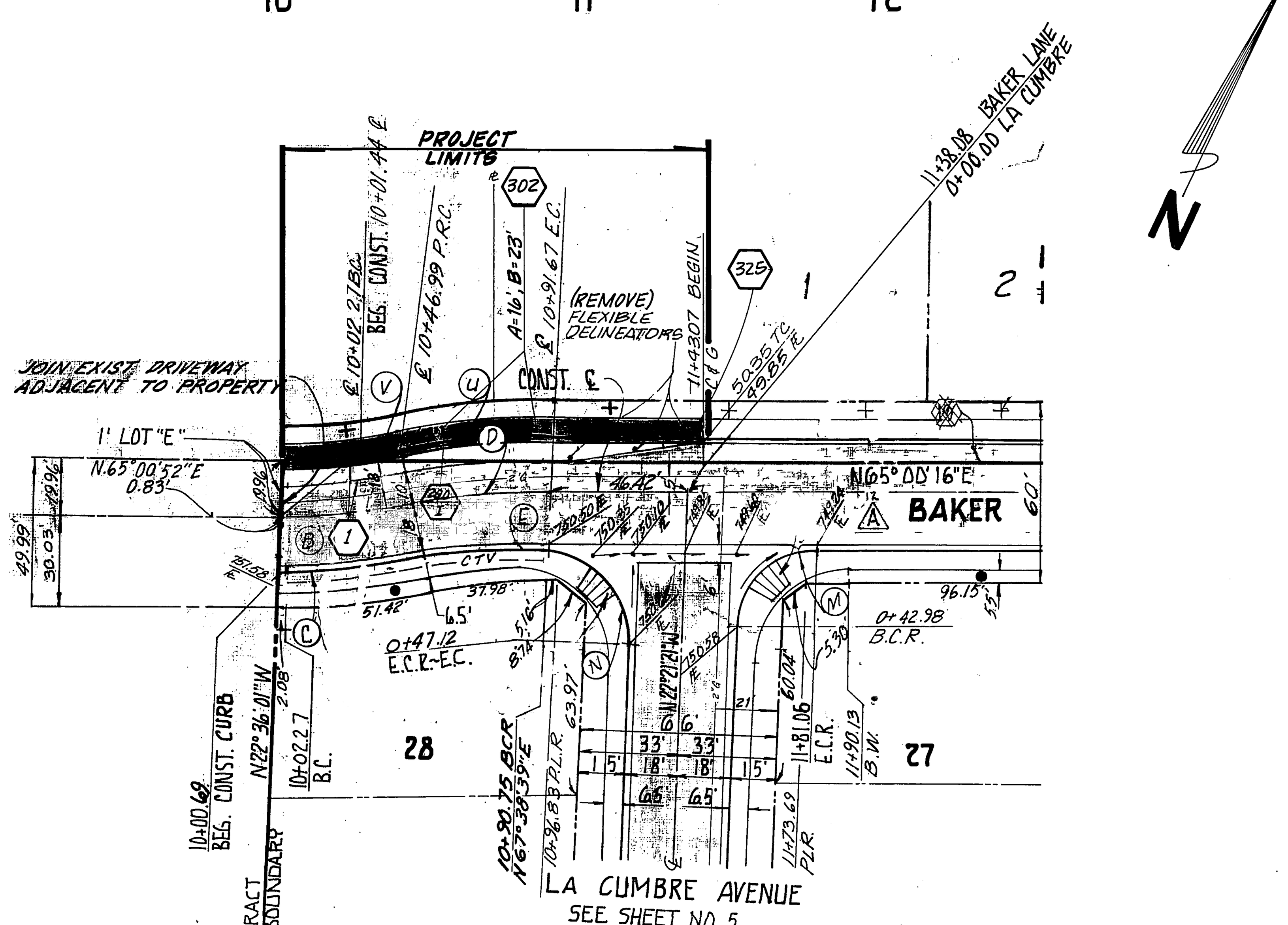

~~CONSTRUCTION NOTE NO. 17 PLANT STREET TREES TO THE SPECIFICATIONS OF THE PARK & RECREATION DEPARTMENT.~~

(℄ FOR STREET TREE IS 10.5' FROM CURB FACE)

FROM B.C. to P.R.C.

CURVE DATA

○	Δ	R	L	T
~~A~~	~~92°38'29"~~	~~27.00'~~	~~43.66'~~	~~28.27'~~
B	12°48'36"	200.00'	44.72'	22.45'
~~C~~	~~12°48'36"~~	~~218.00'~~	~~48.74'~~	~~24.47'~~
D	12°48'00"	200.00'	44.68'	22.43'
~~E~~	~~12°32'12"~~	~~182.00'~~	~~38.82~~	~~19.39'~~
~~F~~	~~13°33'55"~~	~~190.00'~~	~~61.57'~~	~~31.05'~~
~~G~~	~~4°23'46"~~	~~200.00'~~	~~15.35'~~	~~7.68'~~
~~H~~	~~14°10'09"~~	~~200.00'~~	~~49.46'~~	~~24.86'~~
~~J~~	~~4°43'39"~~	~~210.00'~~	~~17.38'~~	~~9.00'~~
~~K~~	~~19°05'39"~~	~~200.00'~~	~~66.65'~~	~~33.64'~~
~~L~~	~~19°05'39"~~	~~182.00'~~	~~60.65'~~	~~30.61'~~
~~M~~	~~87°21'37"~~	~~27.00'~~	~~41.17'~~	~~25.78'~~
~~N~~	~~92°54'41"~~	~~27.00'~~	~~43.78'~~	~~28.42'~~
~~P~~	~~73°31'15"~~	~~27.00'~~	~~34.65'~~	~~20.17'~~

CURVE DATA CONTINUED

○	Δ	R	L	T
~~R~~	~~11°11'16"~~	~~182.00'~~	~~35.54'~~	~~17.83'~~
~~S~~	~~7°22'39"~~	~~182.00'~~	~~23.43~~	~~11.73'~~
~~T~~	~~19°05'35"~~	~~218.00'~~	~~72.65'~~	~~36.66'~~
U	12°48'00"	218.00'	48.70'	24.45'
V	12°48'36"	182.00	40.69'	20.43'

GENERAL NOTES

1. CONSTRUCTION SHALL BE IN ACCORDANCE WITH THE CITY OF RIVERSIDE, DEPARTMENT OF PUBLIC WORKS, STANDARD DRAWINGS, AND THE STANDARD SPECIFICATIONS FOR PUBLIC WORKS CONSTRUCTION 1988 EDITION, 1989 SUPPLEMENT, AND STANDARD DRAWING 10.
2. TRIM EDGE OF EXISTING PAVEMENT WHERE NEW PAVEMENT JOINS TO A SMOOTH, STRAIGHT LINE. CONSTRUCT MATCH-UP PAVING AS SHOWN ON PLAN AND OVERLAY PAVING AS DIRECTED IN THE FIELD TO PROVIDE A SMOOTH SECTION.
3. 6" x 6" BLOCKOUTS FOR MAILBOXES REQUIRED IN CURB SIDEWALK.
4. IT SHALL BE THE RESPONSIBILITY OF THE CONTRACTOR TO CLEAR THE RIGHT OF WAY IN ACCORDANCE WITH THE PROVISIONS OF LAW AS IT AFFECTS EACH UTILITY INCLUDING IRRIGATION LINES AND APPURTENANCES AND AT NO COST TO THE CITY.

CONSTRUCTION NOTES

⬢ NUMBERS ABOVE 100 IN A HEXAGON ON THE PLAN REFER TO THE RESPECTIVE STANDARD DRAWING AND SHALL BE CONSTRUCTED ACCORDINGLY, UNLESS MODIFICATIONS ARE NOTED ON THE PLAN. ANY NUMBER SHOWN BELOW THE STANDARD DRAWING NUMBER INDICATES THE SPECIFIC ALTERNATE TO BE CONSTRUCTED.

(200/I) CONSTRUCT CITY OF RIVERSIDE STD. 200, TYPE I, 6" C.F., CURB & GUTTER

(302) CONSTRUCT CITY OF RIVERSIDE STD. 302, DRIVEWAY APPROACH. LOCATION OF DRIVEWAY APPROACH TO BE DETERMINED BY DEVELOPER AT TIME OF CONSTRUCTION.

(325) CONSTRUCT CITY OF RIVERSIDE STD. 325, SIDEWALK-CURB.

+ PLANT STREET TREE PER PARK DEPT. NOTES.

(1) STRUCTURAL SECTION: .21'A.C. OVER COMPACTED NATIVE.

PARKS DEPARTMENT NOTES

1. All related work shall conform to the city of Riverside Park and Recreation Department Standards.
2. Contact the Street Tree Inspector a minimum of 48 hours in advance at (714)351-6126 to schedule inspection. Inspections shall be required:
   - (a) When plant locations have been spotted in the field prior to digging plant pits.
   - (b) While digging plant pits and planting/relocating trees.
   - (c) After planting and all other indicated of specified work has been completed for start of maintenance.
   - (d) At end of maintenance/final acceptance (contractor/developer will be released from maintenance *only* upon *receipt* of *written* notification from the City that the Park and Recreation Department is assuming maintenance responsibilities).
3. ALL STREET TREE WORK SHALL BE COMPLETED PRIOR TO OCCUPANCY.
4. The Developer shall be responsible to have all plantings acceptably maintained for a minimum period of one (1) year.
5. Street tree planting shall be as follows:

Street Name	Botanical Name / Common Name		Min. Size	Spacing	No. Req.
a. Baker LN.	ULMUS PARVIFOLIUM	EVERGREEN ELM	15 GAL.	45'	2

6. Both a Street Tree Relocation/Removal Permit as issued by the Park and Recreation Department and a Street Opening Permit as issued by the Public Works Department are required prior to commencement of tree relocation and/or removal work. For all trees within the ultimate pavement area, backfill of all holes is to be inspected by the City for proper compaction.
7. All Street Trees in all zones except residential must be automatically irrigated.
8. In the interest of public safety and maintenance, the Street Tree Inspector shall have the authority to revise the street tree quantities and locations shown on approved plans based upon field conditions found at the time of installation of the trees.

PC3006-S

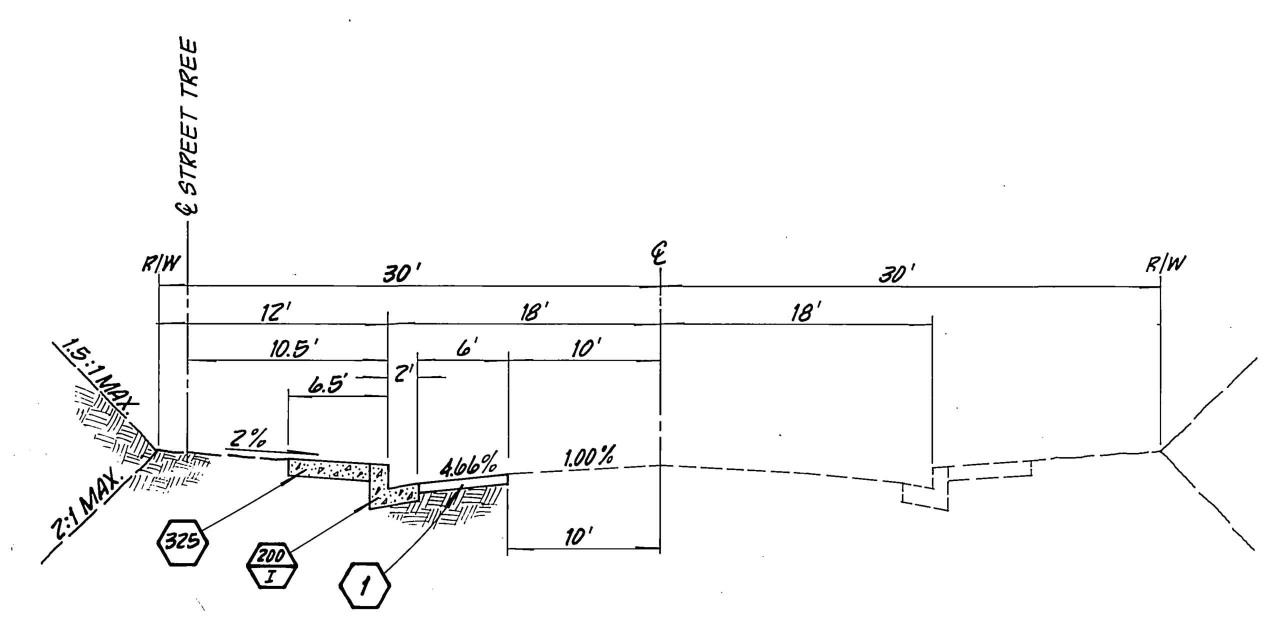

TYPICAL SECTION
BAKER LN.
N.T.S.
T.I. = 5

BENCH MARK NORWOOD
PK & C/R TAG IN MOST WLY. CURB RETURN OF NORWOOD & LA SIERRA AVES.
PER CRFB 985/37
ELEV. 729.40

* AS BUILT 9-3-91 4H

ENGINEER IN RESPONSIBLE CHARGE
HANS J. KAMRATH
R.C.E. 14712 EXPIRES 3/31/93
DATE 11/20/1989

REGISTERED PROFESSIONAL ENGINEER HANS J. KAMRATH NO: 14712 CIVIL STATE OF CALIFORNIA

HALL & FOREMAN, INC.
3186-L AIRWAY AVENUE
COSTA MESA, CA. 92626
(714) 641-8777
PREPARED UNDER SUPERVISION OF:
R.C.E. 8340 DATE 2/16/78

MARK	REVISIONS	APPR.	DATE

DESIGNED BY PH DRAWN BY ___ CHECKED BY ___

CITY OF RIVERSIDE, CALIFORNIA
DEPARTMENT OF PUBLIC WORKS

APPROVED BY	BY	DATE
PRINCIPAL ENGINEER		
PARK DEPARTMENT		12-4-89
TRAFFIC DIVISION		
CHIEF P. W. ENGR.		12-4

APPROVED BY
DIRECTOR OF PUBLIC WORKS
DATE 12/4/89

STREET PLAN & PROFILE
P.M. 24791
BAKER LANE
N'LY SIDE OF BAKER LANE AT INTER. OF LA CUMBRE AVE.
HORIZ. SCALE: 1" = 40' VERT. SCALE: 1" = 4'

CASE NO. PG-67-789
R-2503A
SHEET 1 OF 1
FILE NO.

PC 3006-S

THIS PLAN ADOPTED FROM PLAN # R-2503
INDEXED 8-9-90
J.N. 2559
ADKAN: 2867