GENERAL NOTES

1. IT SHALL BE THE RESPONSIBILITY OF THE CONTRACTOR TO CLEAR THE RIGHT OF WAY IN ACCORDANCE WITH THE PROVISIONS OF LAW AS IT AFFECTS EACH UTILITY INCLUDING IRRIGATION LINES AND APPURTENANCES AND AT NO COST TO THE CITY.

2. CONSTRUCTION SHALL BE IN ACCORDANCE WITH THE CITY OF RIVERSIDE, DEPT. OF PUBLIC WORKS, STANDARD DRAWINGS, AND THE STANDARD SPECIFICATIONS FOR PUBLIC WORKS CONSTRUCTION, 1982 EDITION.

3. TRIM EDGE OF EXISTING PAVEMENT WHERE NEW PAVEMENT JOINS TO A SMOOTH, STRAIGHT LINE. CONSTRUCT MATCH-UP PAVING AS SHOWN ON PLAN

4. CURB AND GUTTER SHALL BE STAKED WITH 3' OFFSETS AT 25' INTERVALS.

5. ELECTRICAL UNDERGROUND FACILITIES TO BE INSTALLED BY DEVELOPER AFTER CONSTRUCTION OF CURB AND GUTTER BUT PRIOR TO PLACEMENT OF CROSSING GUTTERS, SPANDRELS, SIDEWALK AND PAVING.

6. QUANTITIES SHOWN ARE FOR INFORMATION ONLY AND THE CITY OF RIVERSIDE IS NO RESPONSIBLE FOR THEIR ACCURACY.

7. ALL TRAFFIC SIGNS SHALL BE INSTALLED PRIOR TO OPENING THE STREETS TO TRAFFIC.

8. ANY TRAFFIC CONTROL STRIPING OBLITERATED AND/OR BADLY WORN DURING CONSTRUCTION SHALL BE RESTORED BY THE CONTRACTOR WITHIN FIVE DAYS AFTER NOTIFICATION FROM THE CITY INSPECTORS.

9. FINAL STRIPING FOR TRAFFIC CONTROL AND/OR PAVEMENT MARKING TO BE THE RESPONSIBILITY OF THE DEVELOPER.

10. THE PRIVATE ENGINEER SIGNING THESE PLANS IS RESPONSIBLE FOR ASSURING THE ACCURACY AND ACCEPTABILITY OF THE WORK HEREON. IN THE EVENT OF DISCREPANCIES ARISING DURING CONSTRUCTION, THE PRIVATE ENGINEER SHALL BE RESPONSIBLE FOR DETERMINING AN ACCEPTABLE SOLUTION AND REVISING THE PLANS FOR APPROVAL BY THE CITY.

11. THE CONTRACTOR SHALL CALL IN A LOCATION REQUEST TO UNDERGROUND SERVICE ALERT (USA), PHONE NO. 1-800-422-4133, TWO WORKING DAYS BEFORE DIGGING. NO CONSTRUCTION PERMITS WILL BE ISSUED BY THE PUBLIC WORKS DEPARTMENT INVOLVING EXCAVATION FOR UNDERGROUND FACILITIES UNLESS THE APPLICANT HAS BEEN PROVIDED AN INQUIRY IDENTIFICATION NUMBER BY U.S.A.

12. THE PRIVATE ENGINEER PREPARING THESE PLANS SHALL BE RESPONSIBLE FOR PRESERVING OR RE-ESTABLISHING AND REFERENCING SURVEY MONUMENTS DESTROYED, DISTURBED OR BURIED AS A RESULT OF CONSTRUCTION SHOWN HEREON.

PARKS DEPARTMENT NOTES

1. ALL RELATED WORK SHALL CONFORM TO THE CITY OF RIVERSIDE, PARK AND RECREATION DEPARTMENT STANDARDS.

2. CONTACT THE PARK PROJECTS INSPECTOR A MINIMUM OF 48 HOURS IN ADVANCE AT 787-7223 TO SCHEDULE INSPECTIONS. INSPECTIONS SHALL BE REQUIRED: A) WHEN PLANT LOCATIONS HAVE BEEN SPOTTED IN THE FIELD PRIOR TO DIGGING PLANT PITS, B) WHILE DIGGING PLANT PITS AND PLANTING/RELOCATING TREES, C) AFTER PLANTING AND ALL OTHER INDICATED OR SPECIFIED WORK HAS BEEN COMPLETED FOR START OF MAINTENANCE, AND D) AT END OF MAINTENANCE/FINAL ACCEPTANCE THE DEVELOPER WILL BE RELEASED FROM MAINTENANCE ONLY UPON RECEIPT OF WRITTEN NOTIFICATION FROM THE CITY THAT THE PARK AND RECREATION DEPARTMENT IS ASSUMING MAINTENANCE RESPONSIBILITIES.

3. THE DEVELOPER SHALL MAINTAIN ALL PLANTINGS FOR A MINIMUM PERIOD OF ONE (1) YEAR.

4. A PUBLIC WORKS DEPARTMENT PERMIT IS REQUIRED PRIOR TO COMMENCEMENT OF TREE RELOCATION AND/OR REMOVAL WORK. FOR ALL TREES WITHIN THE ULTIMATE PAVEMENT AREA, BACKFILL OF ALL HOLES IS TO BE INSPECTED BY THE CITY FOR PROPER COMPACTION.

5. STREET TREE PLANTING SHALL BE AS FOLLOWS:

STREET NAME	BOTANICAL NAME/COMMON NAME	MIN. SIZE	SPACING	NO. REQ.
NYE AVENUE	WASHINGTONIA ROBUSTA / MEXICAN FAN PALM	4' OF BROWN TRUNK	45'	3
(ONE OF THESE WASHINGTONIA ROBUSTAS TO BE RELOCATED FROM MAGNOLIA AVE. AS SHOWN ON PLAN)				
NYE AVENUE	WASHINGTONIA FILIFERA / CALIFORNIA FAN PALM	(TO BE RELOCATED FROM MAGNOLIA AVE. AS SHOWN ON PLAN.)		1
MAGNOLIA AVENUE	MAGNOLIA GRANDIFLORA / SOUTHERN MAGNOLIA	15 GAL.	—	1

NOTICE TO CONTRACTOR

THE EXISTENCE AND LOCATION OF ANY UNDERGROUND UTILITY PIPES OR STRUCTURES SHOWN ON THESE PLANS ARE OBTAINED BY A SEARCH OF THE AVAILABLE RECORDS. TO THE BEST OF OUR KNOWLEDGE, THERE ARE NO EXISTING UTILITIES EXCEPT AS SHOWN ON THESE PLANS.

THE CONTRACTOR IS REQUIRED TO TAKE DUE PRECAUTIONARY MEASURES TO PROTECT THE UTILITY LINES SHOWN AND ANY OTHER LINES NOT OF RECORD OR NOT SHOWN ON THESE PLANS

CONSTRUCTION NOTES

(1) -- CONSTRUCT 6" CURB AND GUTTER PER STD. 200 TYPE 1

(2) -- CONSTRUCT CURB SIDEWALK PER STD. 325

(3) -- CONSTRUCT 2½" OF A.C. PAVING OVER 8" OF CRUSHED AGGREGATE BASE, INDICATED BY [ ] ON PLAN, PER C/R PLAN R-1021.

(4) -- REMOVE AND REPLACE EXISTING A.C. PAVING, INDICATED BY [ ] ON PLAN

(5) -- REMOVE EXISTING A.C. PAVING, INDICATED BY [////] ON PLAN

(6) -- CONSTRUCT CATCH BASIN PER STD. 405, W=4' V=9.38'

(7) -- INSTALL WHEELCHAIR RAMP PER STD. 304

(8) -- INSTALL MARKERS PER STD. 665, TYPE F-1 FLEXIBLE DELINEATOR

(9) -- CONSTRUCT 6" "X" GUTTER PER STD. 220

(10) -- INSTALL MODIFIED WHEELCHAIR RAMP PER STD. 304 (AS INDICATED ON PLAN)

(11) -- CONSTRUCT 6" CURB PER STD. 200

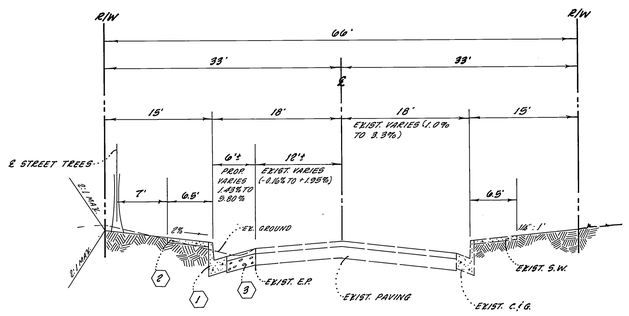

TYPICAL SECTION

NYE AVENUE

T.I. = 5

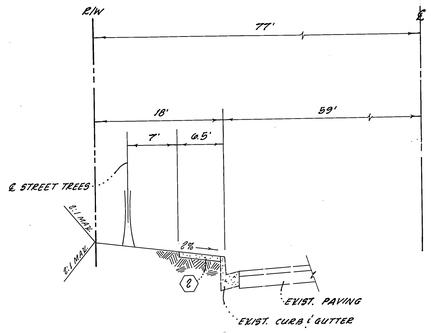

TYPICAL SECTION

MAGNOLIA AVENUE

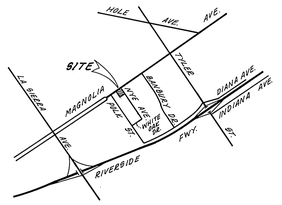

VICINITY MAP

NO SCALE

N

*As built 9-25-85 TL

INDEX WE

ALBERT A. WEBB ASSOCIATES
CIVIL ENGINEERS
3788 McCRAY ST.
RIVERSIDE, CALIFORNIA
(714) 689-1070

APPROVED BY [signature] DATE 6-18-84
R.E. No. 27983

W.O. 84-107 FOR: WHITEHEAD F.B. 1018

MARK	REVISIONS	APPR.	DATE

DESIGNED BY L.R. DRAWN BY L.R. CHECKED BY J.M.B.

CITY OF RIVERSIDE, CALIFORNIA
PUBLIC WORKS DEPARTMENT

APPROVED BY	BY	DATE
PRINCIPAL ENGINEER	[signature]	11/1/84
PARK DEPARTMENT	[signature]	10/24/84
TRAFFIC DIVISION	[signature]	10/25/84
CHIEF PUB. WKS. ENGR.	[signature]	11-2
	[signature]	11/1/84

APPROVED BY [signature]
DIRECTOR OF PUBLIC WORKS
DATE 11/2/84

STREET IMPROVEMENT PLAN

NYE AVENUE
10630 MAGNOLIA AVENUE
BUILDING PERMIT

SCALE:

ACCOUNT No.
DRAWING NUMBER
R-2631
SHEET 1 OF 2
84-107

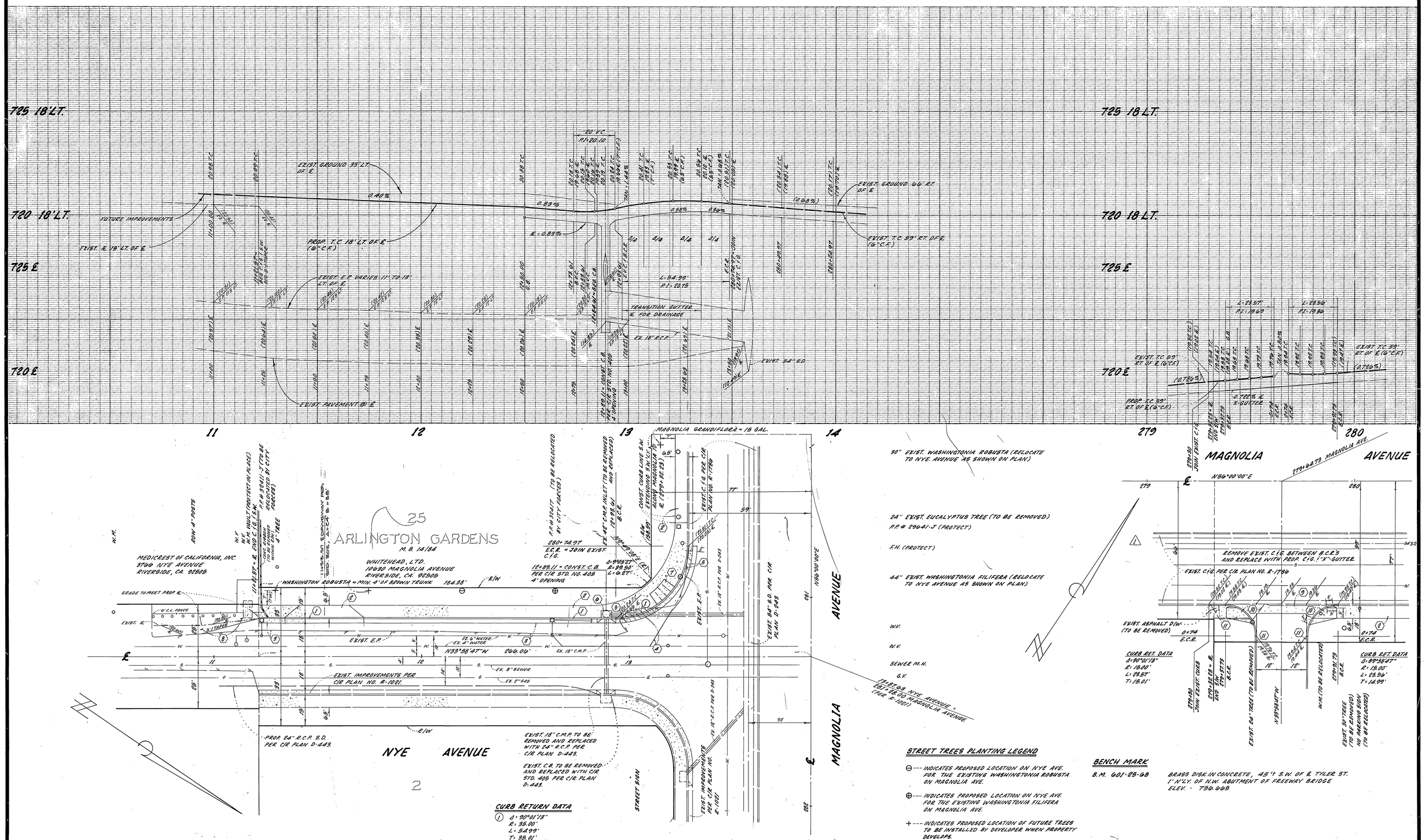

*As built 9-25-85 TL

INDEX WE

CITY OF RIVERSIDE DOMESTIC SYSTEM	CITY OF RIVERSIDE OVERHEAD & UNDERGROUND	SO. CALIF. GAS CO.	PACIFIC BELL
APPROVED BY — DATE 9-17-84	APPROVED BY — DATE 9/11/84	REVIEWED BY — DATE 8-14-84	APPROVED BY — DATE 8-14-84

ALBERT A. WEBB ASSOCIATES
CIVIL ENGINEERS
3700 MT. VERNON ST.
RIVERSIDE, CALIFORNIA
(714) 686-1070
APPROVED BY: DND / RECOMMEND — DATE 10-10-84
R.E. No. 27983
W.O. 84-107 FOR: WHITEHEAD — F.B. 1018

MARK	REVISIONS	APPR.	DATE
1	ADDED D/W OPENING ON MAGNOLIA AVE.		11/1/84

DESIGNED BY L.R. DRAWN BY L.R. CHECKED BY J.M.P.

CITY OF RIVERSIDE, CALIFORNIA
PUBLIC WORKS DEPARTMENT

APPROVED BY	BY	DATE
PRINCIPAL ENGINEER		
PARK DEPARTMENT		
TRAFFIC DIVISION		
CHIEF PUB. WKS. ENGR.		

APPROVED BY — DIRECTOR OF PUBLIC WORKS
DATE 11/2/84

STREET IMPROVEMENT PLAN
NYE AVENUE
10630 MAGNOLIA AVENUE
BUILDING PERMIT
SCALE: 1"=20' HORIZ. ; 1"=2' VERT.

ACCOUNT No.
DRAWING NUMBER R-2631
SHEET 2 OF 2
84-107