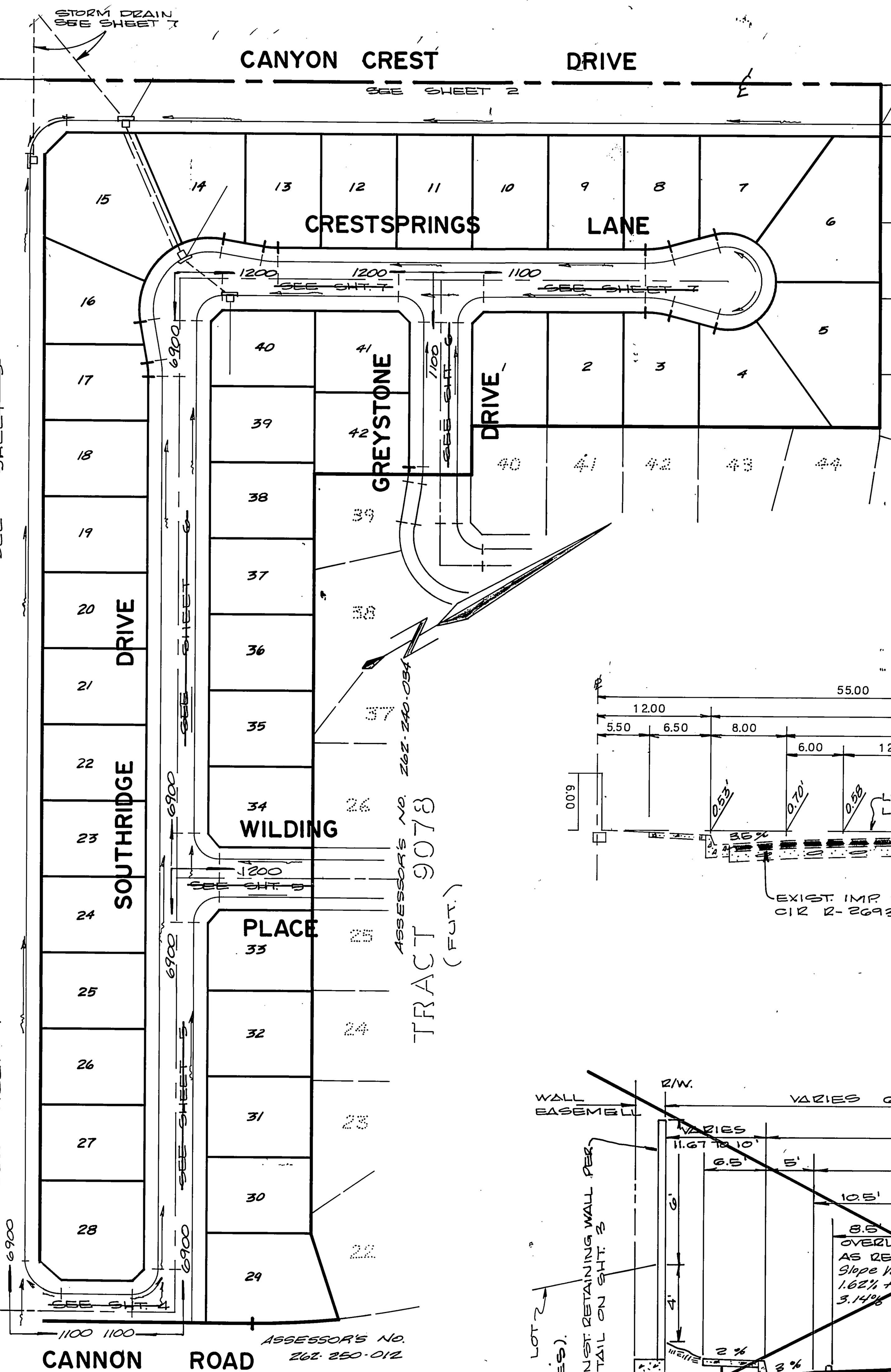

INDEX MAP
NO SCALE

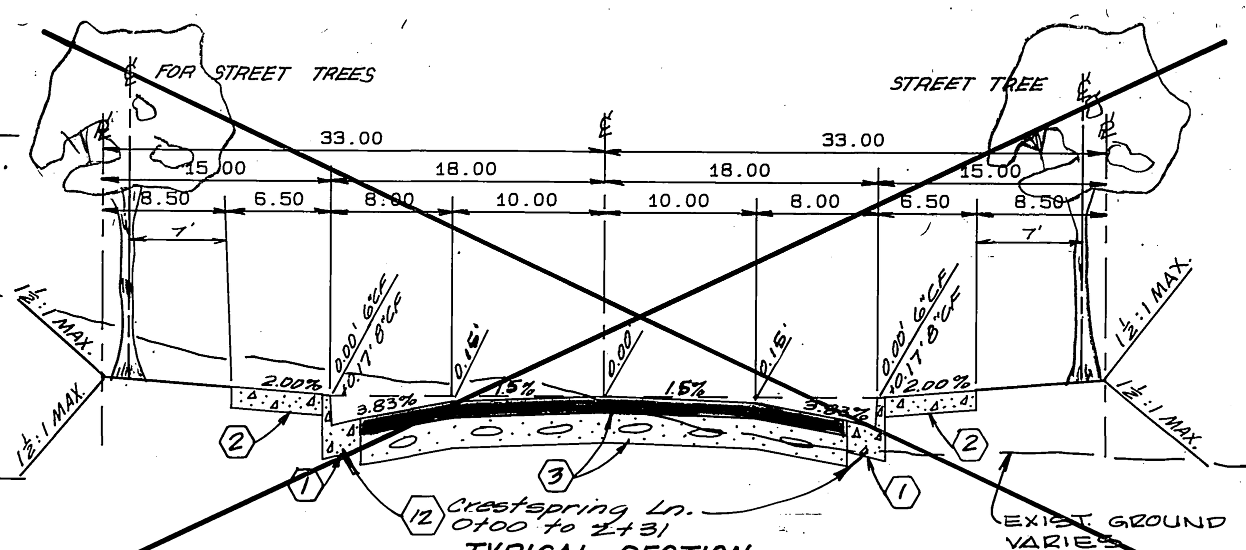

TYPICAL SECTION
NO SCALE

~~CANNON ROAD~~ T.I.=5
~~SOUTHRIDGE DRIVE~~ T.I.=5
~~CRESTSPRINGS LANE~~ T.I.=5
~~GREYSTONE DRIVE~~ T.I.=5

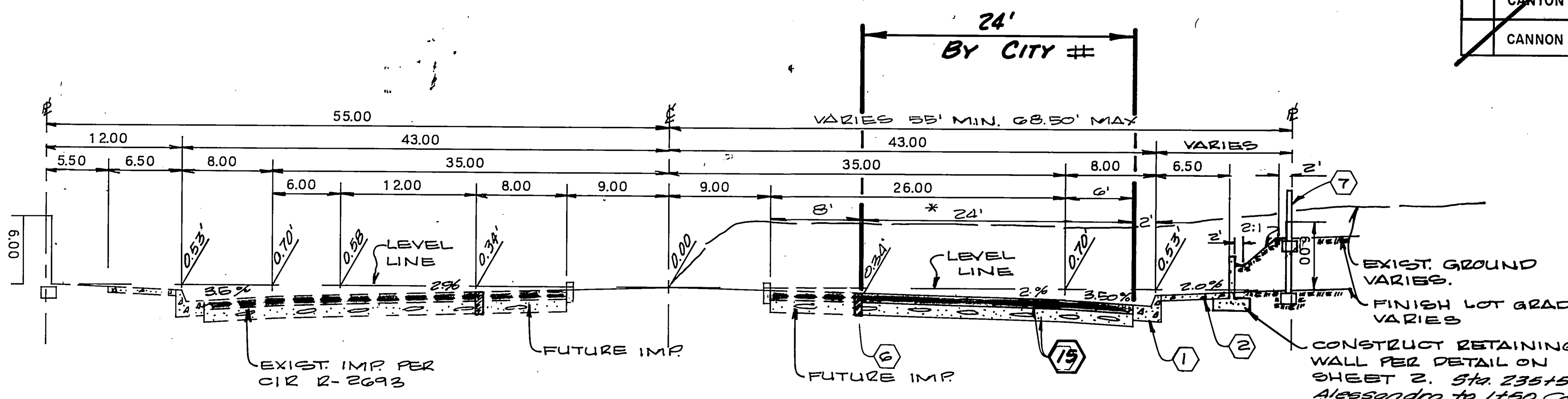

TYPICAL SECTION
NO SCALE
T.I. = 8.0

\# THIS IS THE CITIES PORTION OF CONSTRUCTION. GRADING BY DEVELOPER, PAVING & BASE BY THE CITY.

CANYON CREST DRIVE

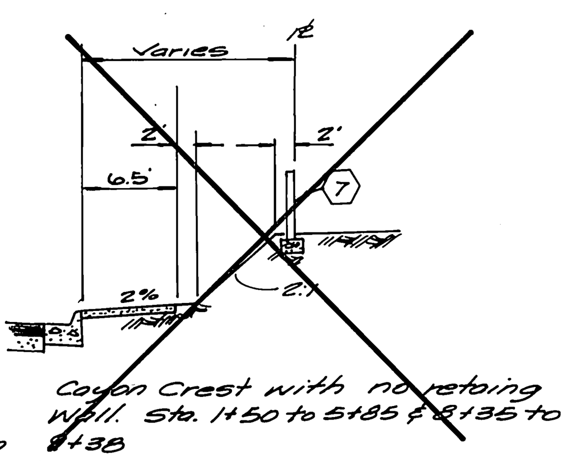

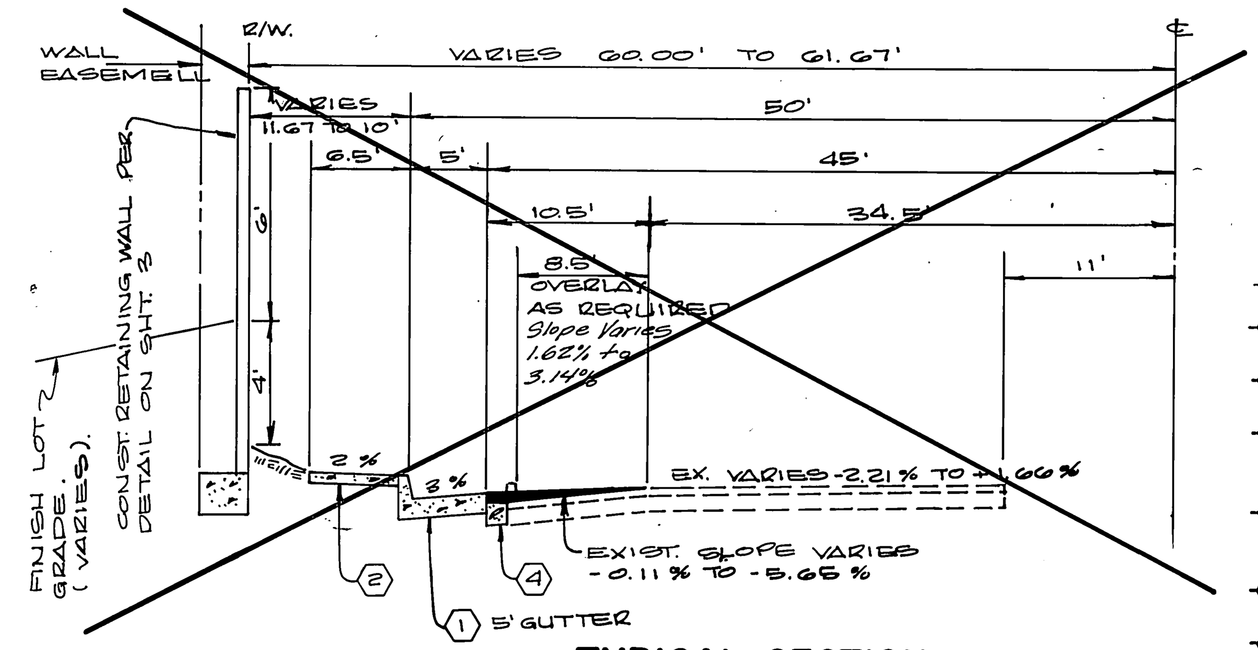

~~TYPICAL SECTION~~
NO SCALE
~~ALESSANDRO BLVD.~~
T.I. = 10.0

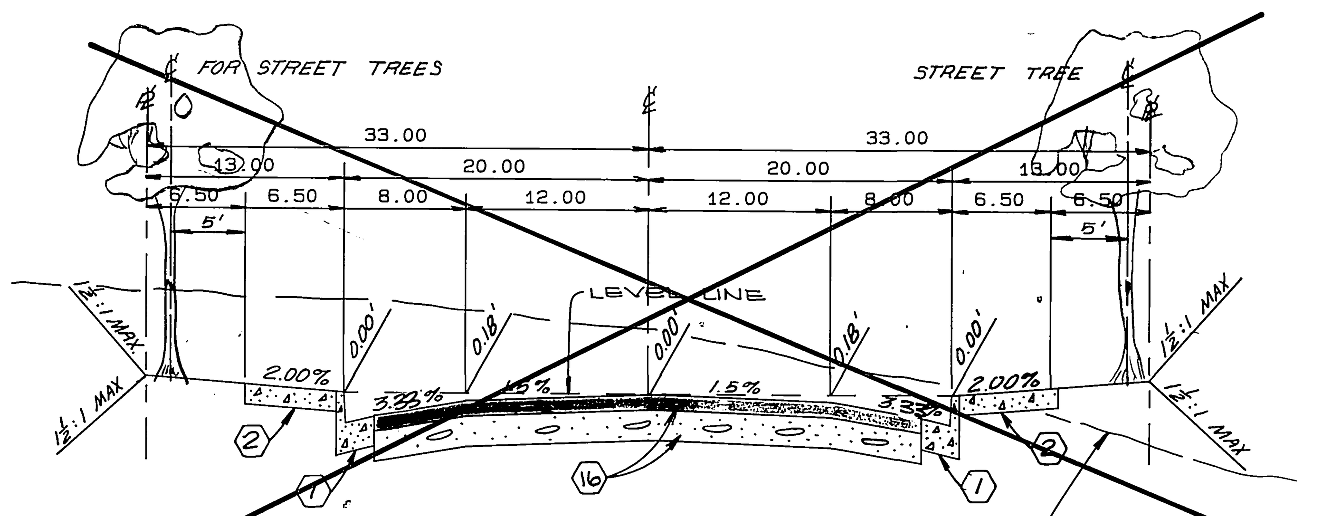

~~TYPICAL SECTION~~
NO SCALE
~~WILDING PLACE~~
T.I.=6

PARKS DEPT. GENERAL NOTES

1. ALL RELATED WORK SHALL CONFORM TO THE CITY OF RIVERSIDE, PARK AND RECREATION DEPARTMENT STANDARDS.
2. CONTACT THE PARK PROJECTS INSPECTOR A MINIMUM OF 48 HOURS IN ADVANCE AT 787-7223 TO SCHEDULE INSPECTIONS. INSPECTIONS SHALL BE REQUIRED: A) WHEN PLANT LOCATIONS HAVE BEEN SPOTTED IN THE FIELD PRIOR TO DIGGING PLANT PITS, B) WHILE DIGGING PLANT PITS AND PLANTING/RELOCATING TREES, C) AFTER PLANTING AND ALL OTHER INDICATED OR SPECIFIED WORK HAS BEEN COMPLETED FOR START OF MAINTENANCE, AND D) AT END OF MAINTENANCE/FINAL ACCEPTANCE THE DEVELOPER WILL BE RELEASED FROM MAINTENANCE ONLY UPON RECEIPT OF WRITTEN NOTIFICATION FROM THE CITY THAT THE PARK AND RECREATION DEPARTMENT IS ASSUMING MAINTENANCE RESPONSIBILITIES.
3. THE DEVELOPER SHALL MAINTAIN ALL PLANTINGS FOR A MINIMUM PERIOD OF ONE (1) YEAR.
4. PUBLIC WORKS AND PARK AND RECREATION DEPARTMENT PERMITS ARE REQUIRED PRIOR TO COMMENCEMENT OF TREE RELOCATION AND/OR REMOVAL WORK. FOR ALL TREES WITHIN THE ULTIMATE PAVEMENT AREA, BACKFILL OF ALL HOLES IS TO BE INSPECTED BY THE CITY FOR PROPER COMPACTION.
5. STREET TREE PLANTING SHALL BE AS FOLLOWS.

STREET NAME	BOTANICAL NAME/COMMON NAME	MIN. SIZE	SPACING	NO. REQ.
SOUTHRIDGE DR.	PINUS CANARIENSIS / CANARY ISLAND PINE	15 GAL.	45'	45
WILDING PL.	PRUNUS CERASIFERA KRAUTER VESUVUS / RED LEAF PLUM	15 GAL.	45'	4
GREYSTONE DR.	PRUNUS CERASIFERA KRAUTER VESUVUS / RED LEAF PLUM	15 GAL.	45'	6
CRESTSPRINGS LN.	PINUS CANARIENSIS / CANARY ISLAND PINE	15 GAL.	45'	26
ALESSANDRO BLVD.	SEE REVERSE FRONTAGE PLAN NUMBER A-1837 PREPARED BY ORTON ASSOCIATES (714) 985-7000			
CANYON CREST DR.				
CANNON RD.	PINUS CANARIENSIS / CANARY ISLAND PINE	15 GAL.	45'	1

STREET SIGN SCHEDULE

	STREET SIGN SCHEDULE	BLK. No.
A	ALESSANDRO BLVD.	6900
	CANNON ROAD.	1100
B	ALESSANDRO BLVD	6900
	CANYON CREST DRIVE	1100
C	CANNON ROAD	1100
	SOUTHRIDGE DRIVE	6900
D	SOUTHRIDGE DRIVE	6900
	WILDING PLACE	1200
E	SOUTHRIDGE DRIVE	6900
	CRESTSPRINGS LANE	1200
F	CRESTSPRINGS LANE	1200
	GREYSTONE DRIVE	1100
G	R-1- STOP SIGN 36" X 36" OCTAGON	

GENERAL NOTES

1. IT SHALL BE THE RESPONSIBILITY OF THE CONTRACTOR TO CLEAR THE RIGHT OF WAY IN ACCORDANCE WITH THE PROVISIONS OF LAW AS IT AFFECTS EACH UTILITY INCLUDING IRRIGATION LINES AND APPURTENANCES AND AT NO COST TO THE CITY.
2. CONSTRUCTION SHALL BE IN ACCORDANCE WITH THE CITY OF RIVERSIDE DEPARTMENT OF PUBLIC WORKS, STANDARD DRAWINGS, & STD. SPECS. FOR PUBLIC WORKS CONST. 1985 EDITION, 1986 SUPPLEMENT.
3. TRIM EDGE OF EXISTING PAVEMENT WHERE NEW PAVEMENT JOINS TO A SMOOTH, STRAIGHT LINE. CONSTRUCT MATCH-UP PAVING AS SHOWN ON PLAN AND OVERLAY PAVING AS DIRECTED IN THE FIELD TO PRODUCE A SMOOTH SECTION. PRIVATE ENGINEER ESTIMATES OVERLAY TO BE 100 TONS.
4. CONSTRUCT DRIVEWAY APPROACHES PER STD. DWG. 302. EXACT SIZE AND LOCATION TO BE DETERMINED AT THE TIME OF CONSTRUCTION AS APPROVED BY THE TRAFFIC ENGINEER.
5. CURB AND GUTTER SHALL BE STAKED WITH 3' OFFSETS AT 25' INTERVALS.
6. ALL TRAFFIC SIGNS SHALL BE INSTALLED PRIOR TO OPENING THE STREETS TO TRAFFIC.
7. ANY TRAFFIC CONTROL STRIPING OBLITERATED AND/OR BADLY WORN DURING CONSTRUCTION SHALL BE RESTORED BY THE CONTRACTOR WITHIN FIVE DAYS AFTER NOTIFICATION FROM THE CITY INSPECTORS.
8. FINAL STRIPING FOR TRAFFIC CONTROL AND/OR PAVEMENT MAKING TO BE THE RESPONSIBILITY OF THE DEVELOPER.
9. THE SUBDIVIDER SHALL ARRANGE FOR A SOIL TEST TO BE MADE BY A SOILS ENGINEER AFTER THE STREETS HAVE BEEN PREPARED TO ROUGH GRADE. DEPTH OF BASE MATERIAL AND A.C. PAVING SHALL BE DETERMINED BY THE CITY OF RIVERSIDE DESIGN STANDARDS AND TEST PROCEDURES.
10. SEE "STREET LIGHTING PLANS" FOR QUANTITY AND LOCATION OF REQUIRED STREET LIGHTS.
11. ALL FLAGGED ELEVATIONS SHALL BE STAKED IN THE FIELD BY THE PRIVATE ENGINEER.
12. THE PRIVATE ENGINEER SIGNING THESE PLANS IS RESPONSIBLE FOR ASSURING THE ACCURACY AND ACCEPTABILITY OF THE WORK HEREON. IN THE EVENT OF DISCREPANCIES ARISING DURING CONSTRUCTION, THE PRIVATE ENGINEER SHALL BE RESPONSIBLE FOR DETERMINING AN ACCEPTABLE SOLUTION AND REVISING THE PLANS FOR APPROVAL BY THE CITY.
13. THE CONTRACTOR SHALL CALL IN A LOCATION REQUEST TO UNDERGROUND SERVICE ALERT (USA), PHONE NO. 1-800-422-4133, TWO WORKING DAYS BEFORE DIGGING. NO CONSTRUCTION PERMIT WILL BE ISSUED BY THE PUBLIC WORKS DEPARTMENT INVOLVING EXCAVATION FOR UNDERGROUND FACILITIES UNLESS THE APPLICANT HAS BEEN PROVIDED AN INQUIRY IDENTIFICATION NUMBER BY U.S.A.
14. IN RESIDENTIAL AREAS 6" X 6" OR 6" DIAMETER BLOCKOUTS FOR MAILBOXES ARE REQUIRED IN CURB SIDEWALK 10" TO 14" FROM CURB FACE AT THE PROPERTY LINE BETWEEN ADJACENT RESIDENCES.
15. THE DEVELOPER SHALL BE RESPONSIBLE FOR PRESERVING OR RE-ESTABLISHING AND REFERENCING SURVEY MONUMENTS DESTROYED, DISTURBED OR BURIED AS A RESULT OF CONSTRUCTION SHOWN HEREON.
16. ON ALL AREAS WITHIN PUBLIC RIGHT OF WAY WHERE THE FILL IN ONE (1) FOOT OR GREATER, A LETTER WILL BE REQUIRED FROM THE SOILS ENGINEER, CERTIFYING THE COMPACTION OF THE FILL BELOW SUBGRADE, PRIOR TO ISSUANCE OF THE CONSTRUCTION PERMIT/CUT SHEETS.
17. CONSTRUCT 6' BLOCK WALL PER CITY OF RIVERSIDE STD. 704. TYPE AND COLOR OF BLOCK: ORCO LA PAZ (OR EQUAL). MORTAR: COLOR TO MATCH. BLOCK TYPE AND COLOR OF CAP: 6"x6"x18" ORCO MISSION "FOR CAP" OR EQUAL. OTHER PILASTERS AS SHOWN ON SHEETS 2, 3 & 4 PER DETAIL ON SHEET 2&3. USE ORCO MISSION (OR EQUAL) WITH MATCHING MORTAR. THIS WALL REQUIRES A PERMIT & INSPECTION FROM THE PUBLIC WORKS ENGINEERING DEPARTMENT.
18. ELECTRICAL UNDERGROUND FACILITIES TO BE INSTALLED BY DEVELOPER AFTER CONSTRUCTION OF CURB & GUTTER BUT PRIOR TO PLACEMENT OF CROSSING GUTTER, SPANDRALS, SIDEWALK, AND PAVING.
19. IN ORDER TO COORDINATE THE CITY'S PORTION OF THE WORK, THE DEVELOPER AND OR CONTRACTOR SHALL GIVE THE CITY 60 DAYS NOTICE IN ORDER THAT THE DEVELOPER SHALL PREPARE AND COMPACT ROUGH SUBGRADE (±.1') AND IS RESPONSIBLE FOR THE CONDITION OF THE SUBGRADE UNTIL ACCEPTED BY THE CITY AND UNTIL THE CITY'S CONTRACTOR STARTS WORKING. THE DEVELOPER IS ALSO RESPONSIBLE FOR BARRICADES DURING THIS TIME.
20. DEVELOPER TO GIVE CITY OF RIVERSIDE WATER DIVISION TEN (10) WORKING DAYS NOTICE PRIOR TO START OF CONSTRUCTION AND TO ALLOW FIFTEEN (15) WORKING DAYS FOR COMPLETION OF WORK. (787-7611)

CONSTRUCTION NOTES

1. ~~Construct Std. 200 Curb & Gutter 6" CF Type I~~
2. ~~Construct Std. 325 Curbline Sidewalk~~
3. ~~Construct 2½" A.C. paving over "crushed aggregate or "A.C. over compacted native, per S.R. R=~~
4. ~~Construct 4½" A.C. paving over "crushed aggregate or "A.C. over compacted native per S.R. R=~~
5. ~~Remove existing berm~~
6. ~~Install 2"x4" Redwood Header~~
7. ~~Construct std. 704, 6' block wall (This wall requires a permit & inspection from public works engineering devision. See note 17.~~
8. ~~Construct Std. 220, 6' wide cross gutter~~
9. ~~Construct Std. 304 Wheelchair ramp~~
10. ~~Construct Std. 180 barricade~~
11. ~~Overlay existing paving as required~~
12. ~~Const. Std 200 Curb & Gutter 8" C.F. Type I~~
13. ~~Plant street trees to the specifications of the Park & Recreation Dept.~~
14. ~~Const. Std. 411 Under sidewalk drain~~
15. Const. .32' A.C. paving over .33' crushed aggregate or "A.C. over compacted native per S.R. 1285 R = 70
16. ~~Const. "A.C. paving over "crushed aggregate or "A.C. over compacted native per S.R. R=~~
17. ~~Const. 10' Pilaster per detail on sheet 3. See General Note 17.~~

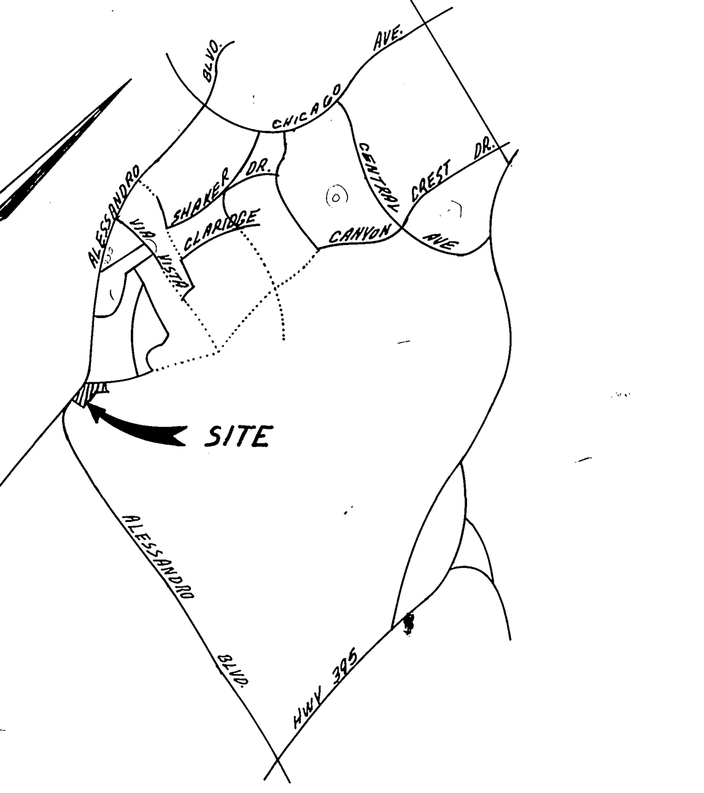

LOCATION MAP
NO SCALE

~~NOTICE TO CONTRACTOR~~

1. THE EXISTENCE AND LOCATION OF ANY UNDERGROUND UTILITY PIPES OR STRUCTURES SHOWN ON THESE PLANS ARE OBTAINED BY A SEARCH OF THE AVAILABLE RECORDS. TO THE BEST OF OUR KNOWLEDGE, THERE ARE NO EXISTING UTILITIES EXCEPT THOSE SHOWN ON THESE PLANS.
2. THE CONTRACTOR IS REQUIRED TO TAKE DUE PRECAUTIONARY MEASURES TO PROTECT THE UTILITY LINES SHOWN AND ANY OTHER LINES NOT OF RECORD OR NOT SHOWN ON THESE PLANS.
3. CALL UNDERGROUND SERVICE ALERT (USA) 1-800-422-4133 AT LEAST 48 HOURS PRIOR TO EXCAVATION

* AS BUILT 12-16-86 BLD

REGISTERED PROFESSIONAL ENGINEER — JOHN JORDAN — EXPIRES 3-31-90 — No. 27983 — CIVIL — STATE OF CALIFORNIA

BENCH MARK: THIS PLAN ONLY
FOUND 1 1/2" SQUARE ROD IN CONCRETE, IN WELL 200' SLY OF VIA VISTA DRIVE ON ALESSANDRO BLVD. CITY OF RIVERSIDE BENCH MARK F-7A. ELEVATION 1337.423 (CITY), TAKEN AS ELEVATION 1337.90 FOR THESE PLANS, TO TIE TO PLANS IN ADJACENT SUBDIVISION.

ALBERT A. WEBB ASSOCIATES
(714) 686-1070
CIVIL ENGINEERS
3788 McCRAY STREET
RIVERSIDE, CALIFORNIA
APPROVED BY [signature] DATE 10-30-85
R.E. No. 27983
W.O. 84-177 FOR: CONCORDIA F.B. 1041

MARK	REVISIONS	APPR.	DATE

DESIGNED BY [initials] DRAWN BY [initials] CHECKED BY [initials]

CITY OF RIVERSIDE, CALIFORNIA
PUBLIC WORKS DEPARTMENT

APPROVED BY	BY	DATE
PRINCIPAL ENGINEER	[initials]	6/24/86
INSPECTION	REL	6/19/86
TRAFFIC DIVISION		
CHIEF PUB. WKS. ENGR.		
PLANNING DEPT.		

APPROVED BY [signature]
DIRECTOR OF PUBLIC WORKS
DATE 6-24-86

CANYON CREST DRIVE PAVEMENT PARTICIPATION WITH TRACT 9078-6

SCALE: NO SCALE

ACCOUNT No. 30-575-377-07
DRAWING NUMBER
R-2760 A
SHEET 1 OF 2

ADAPTED FROM PLAN R-2760

EXIST. 606' V.C.

EXIST. ℄ FINISHED GRADE @ ℄ STREET

EXIST. GROUND 17' RT.

PROP. TOP OF REDWOOD HEADER 17' RT.

EXIST. GROUND @ ℄ R/W

PROP. T.G. GRADE 43' RT. (6" C.F.)

1520 ℄

1520 17' RT.

1520 35' RT.

1520 43' RT.

FUTURE TOP OF HEADER 17' RT.

FUTURE CROWN LINE 35' RT.

FUTURE T.C. 43' RT. (6" C.F.)

PORTION OF 606' V.C.

PORTION OF A 400' SUPER ELEVATION TRANSITION

126' CURB TRANSITION

115' V.C.

EXIST. 27" S.D. PER C/R PLAN R-2093

EXIST. 8" SEWER PER C/R PLAN S-1888

EXIST. CURB & GUTTER & S/W. PER C/R. R-2093

EXIST. E.P.

EXIST. M.H.

N 39° 32' 00" E 938.00'

PROJECT LIMITS

VINE POCKETS TYP.

GRADE SWALE TO DRAIN.

FUTURE IMPROVEMENTS

GRADE @ 1 1/2 : 1 TO DAYLIGHT.

SLOPE VARIES 2:1 MAX. 12% MIN.

ALESSANDRO BLVD.

N 39° 28' 00" W

℄ 2400.00 CANYON CREST

℄ 2394 + TIES ALESSANDRO

SEE SHEET 3

SEE SHEET 7 FOR PROPOSED S.D.

12' SEWER EASEMENT

CANYON CREST DRIVE

CONST. 6' PILASTER @ 60'± o.c. PER DETAIL THIS SHEET

CONST. 6' PILASTER @ 60'± o.c. PER DETAIL THIS SHEET

SEE WALL OPENING DETAIL ABOVE

SEE SHEET 7

BEGIN CURB TRANS. 6" C.F.

END CURB TRANS. 6" C.F.

BEGIN RETAINING WALL

END RETAINING WALL

END 41" OUTLET

END IMP. BOUNDARY

TRACT BOUNDARY

TRACT NO. 20388

WORK TO BE DONE THIS PROJECT

GRADING BY DEVELOPER ; BASE & PVMT. BY CITY

12"x6"x12" SLUMPED COLUMN BLOCK

2-#3 BARS

FOOTING

6"x6"x16" SLUMPED BLOCK WALL PER C/R STD. 704.

PILASTER DETAIL
NO SCALE

#4 BARS (2 IN EACH CELL)

3-#4 BARS HORZ. (TOP-MID-BOTTOM)

6-#4 BARS (2 IN EACH CELL)

ALL CELLS CONTAINING CABLE-SLAB REINFORCED SOLID.

10' OPENING FOR SURFACE DRAIN

#3 BARS PER C/R STD. 794 (24" o/c) TYP.

1" CONC. LIP

10' OPENING

6'

#4 CONT.

12"x2"x12" SLUMPED CAP

12"x6"x12" SLUMPED COLUMN BLOCK

2-#3 BARS.

#4 CONT.

NOTE:
1. FOR INFO. NOT SHOWN REFER TO C/R STD. 704.
2. SEE GENERAL NOTE #17.

SECTION "A" "A"
NO SCALE

CURVE DATA

NO.	Δ	R.	L.	T.
1	90°00'00"	35.00'	54.98'	35.00'

BENCH MARK: THIS PLAN ONLY
FOUND 1 1/2" SQUARE ROD IN CONCRETE, IN WELL 200' SLY OF VIA VISTA DRIVE ON ALESSANDRO BLVD. CITY OF RIVERSIDE BENCH MARK F-7A. ELEVATION 1337.423 (CITY), TAKEN AS ELEVATION 1337.90 FOR THESE PLANS, TO TIE TO PLANS IN ADJACENT SUBDIVISION.

NOTE:
SEE SHEET 1 FOR GENERAL & CONSTRUCTION NOTES.

ORCO MISSION SLUMP FOR CAP

PLACE 6"ϕ X 18" L. PVC OR EQ. SLEEVES THROUGH THE FOUNDATION FLUSH W. S/W @ 20' ± O.C.

Note: See General Note #17

PLACE 1"ϕ X 12" L. PVC. OR EQ. 1" INTO 6"ϕ SLEEVE.

RETAINING WALL DETAIL "B" "B"
* AS BUILT 12-16-86 BLD

REGISTERED PROFESSIONAL ENGINEER JOHN JORDAN EXPIRES 6-30 No. 21983 CIVIL STATE OF CALIFORNIA

ALBERT A. WEBB ASSOCIATES
(714) 686-1070
CIVIL ENGINEERS
3788 MCCRAY
RIVERSIDE, CALIFORNIA

APPROVED BY [signature] DATE 10/30/85
R.E. No. 21983

W.O. 84-178 FOR: CONCORDIA DEV. HOMES F.B. 104

DESIGNED BY DAS DRAWN BY PIET CHECKED BY [signature]

MARK	REVISIONS	APPR.	DATE

CITY OF RIVERSIDE, CALIFORNIA
PUBLIC WORKS DEPARTMENT

APPROVED BY	BY	DATE
PRINCIPAL ENGINEER	[signature]	
INSPECTION	[signature]	6/24/86
TRAFFIC DIVISION		
CHIEF PUB. WKS. ENGR.		
PLANNING		

APPROVED BY [signature]
DIRECTOR OF PUBLIC WORKS

DATE 6-24-86

CANYON CREST DRIVE PAVEMENT PARTICIPATION WITH TRACT 9078-6

SCALE: 1"= 40' Horz. 1"= 8' Vert.

ACCOUNT No. 30-575-377-07

DRAWING NUMBER R-2760A

SHEET 2 OF 2

ADAPTED FROM PLAN R-2760