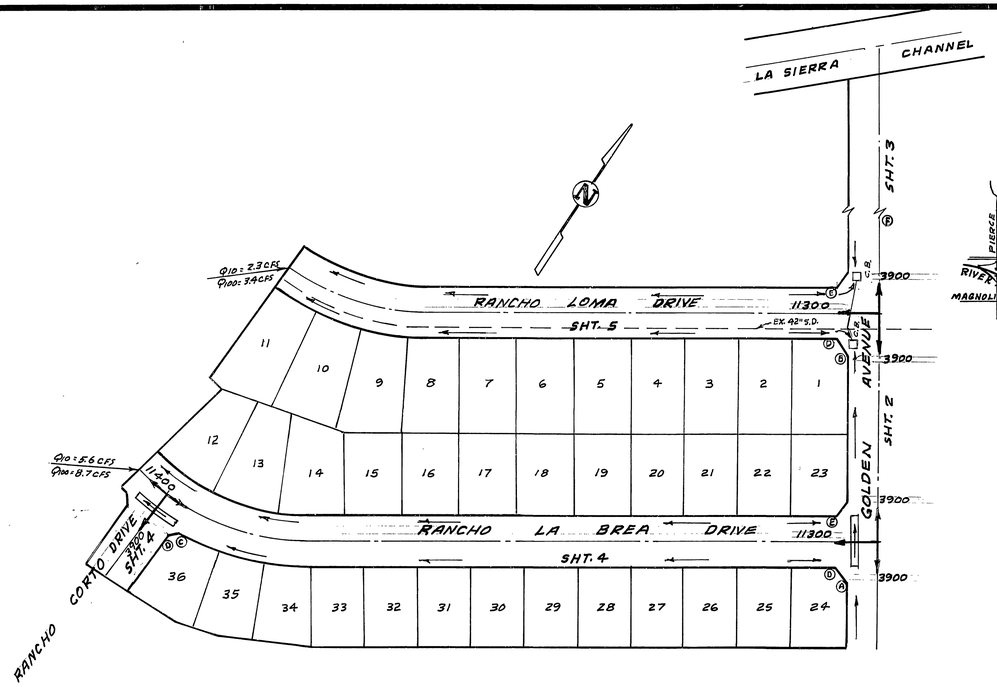

INDEX MAP
NO SCALE

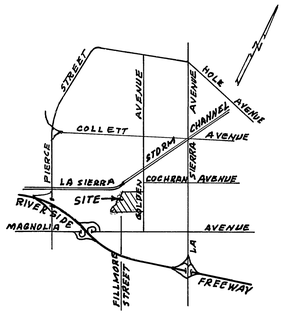

LOCATION MAP
NO SCALE

PARKS DEPT - GENERAL NOTES

1. ALL RELATED WORK SHALL CONFORM TO THE CITY OF RIVERSIDE, PARK AND RECREATION DEPARTMENT STANDARDS.
2. CONTACT THE PARK PROJECTS INSPECTOR A MINIMUM OF 48 HOURS IN ADVANCE AT 787-7223 TO SCHEDULE INSPECTIONS. INSPECTIONS SHALL BE REQUIRED: A) WHEN PLANT LOCATIONS HAVE BEEN SPOTTED IN THE FIELD PRIOR TO DIGGING PLANT PITS, B) WHILE DIGGING PLANT PITS AND PLANTING/RELOCATING TREES, C) AFTER PLANTING AND ALL OTHER INDICATED OR SPECIFIED WORK HAS BEEN COMPLETED FOR START OF MAINTENANCE, AND D) AT END OF MAINTENANCE/FINAL ACCEPTANCE THE DEVELOPER WILL BE RELEASED FROM MAINTENANCE ONLY UPON RECEIPT OF WRITTEN NOTIFICATION FROM THE CITY THAT THE PARK AND RECREATION DEPARTMENT IS ASSUMING MAINTENANCE RESPONSIBILITIES.
3. THE DEVELOPER SHALL MAINTAIN ALL PLANTINGS FOR A MINIMUM PERIOD OF ONE (1) YEAR.
4. PUBLIC WORKS AND PARK AND RECREATION DEPARTMENT PERMITS ARE REQUIRED PRIOR TO COMMENCEMENT OF TREE RELOCATION AND/OR REMOVAL WORK. FOR ALL TREES WITHIN THE ULTIMATE PAVEMENT AREA, BACKFILL OF ALL HOLES IS TO BE INSPECTED BY THE CITY FOR PROPER COMPACTION.
5. STREET TREE PLANTING SHALL BE AS FOLLOWS.

	STREET NAME	BOTANICAL NAME/COMMON NAME	MIN. SIZE	SPACING	NO. REQ.
	GOLDEN AVE.	CINNAMOMUM CAMPHORA / CAMPHOR	15 GAL.	45'	4
	RANCHO LOMA DR	PYRUS CALLERYANA / BRADFORD BRADFORD / PEAR	15 GAL.	45'	17
	RANCHO LA BREA DR	PYRUS CALLERYANA / BRADFORD BRADFORD / PEAR	15 GAL.	45'	39
	RANCHO CORTO DR	LAGERSTROEMIA INDICA / CRAPE MYRTLE	15 GAL.	45'	4

STREET SIGN SCHEDULE	BLK No.
(A) GOLDEN AVE	3900
RANCHO LA BREA DR	11300
(B) GOLDEN AVE	3900
RANCHO LOMA DR	11300
(C) RANCHO LA BREA DR	11400
RANCHO CORTO DR	3900
(D) R1 (30"X30" STOP SIGN)	
(E) W53 (NOT A THRU STREET 24"X24")	
(F) W31A (500) FT	

INSTALL PER CITY OF RIVERSIDE STANDARD DWG. NO. 662 A AND STANDARD DWG. NO. 665.

GENERAL NOTES

1. IT SHALL BE THE RESPONSIBILITY OF THE CONTRACTOR TO CLEAR THE RIGHT OF WAY IN ACCORDANCE WITH THE PROVISIONS OF LAW AS IT AFFECTS EACH UTILITY INCLUDING IRRIGATION LINES AND APPURTENANCES AND AT NO COST TO THE CITY.
2. CONSTRUCTION SHALL BE IN ACCORDANCE WITH THE CITY OF RIVERSIDE DEPARTMENT OF PUBLIC WORKS, STANDARD DRAWINGS, *STANDARD DRAWING NO. 10 AND THE STANDARD SPECIFICATIONS FOR PUBLIC WORKS CONSTRUCTION, CURRENT EDITION.*
3. TRIM EDGE OF EXISTING PAVEMENT WHERE NEW PAVEMENT JOINS TO A SMOOTH, STRAIGHT LINE. CONSTRUCT MATCH-UP PAVING AS SHOWN ON PLAN AND OVERLAY PAVING AS DIRECTED IN THE FIELD TO PRODUCE A SMOOTH SECTION.
4. CONSTRUCT DRIVEWAY APPROACHES PER STD. DWG. 302. EXACT SIZE AND LOCATION TO BE DETERMINED AT THE TIME OF CONSTRUCTION AS APPROVED BY THE TRAFFIC ENGINEER.
5. CURB AND GUTTER SHALL BE STAKED WITH 3' OFFSETS AT 25' INTERVALS.
6. ALL TRAFFIC SIGNS SHALL BE INSTALLED PRIOR TO OPENING THE STREETS TO TRAFFIC.
7. ANY TRAFFIC CONTROL STRIPING OBLITERATED AND/OR BADLY WORN DURING CONSTRUCTION SHALL BE RESTORED BY THE CONTRACTOR WITHIN FIVE DAYS AFTER NOTIFICATION FROM THE CITY INSPECTORS.
8. FINAL STRIPING FOR TRAFFIC CONTROL AND/OR PAVEMENT MARKING TO BE THE RESPONSIBILITY OF THE DEVELOPER.
9. THE SUBDIVIDER SHALL ARRANGE FOR A SOIL TEST TO BE MADE BY A SOILS ENGINEER AFTER THE STREETS HAVE BEEN PREPARED TO ROUGH GRADE. DEPTH OF BASE MATERAL AND A.C. PAVING SHALL BE DETERMINED BY THE CITY OF RIVERSIDE DESIGN STANDARDS AND TEST PROCEDURES.
10. SEE "STREET LIGHTING PLANS" FOR QUANTITY AND LOCATION OF REQUIRED STREET LIGHTS.
11. ALL FLAGGED ELEVATIONS SHALL BE STAKED IN THE FIELD BY THE PRIVATE ENGINEER.
12. THE PRIVATE ENGINEER SIGNING THESE PLANS IS RESPONSIBLE FOR ASSURING THE ACCURACY AND ACCEPTABILITY OF THE WORK HEREON. IN THE EVENT OF DISCREPANCIES ARISING DURING CONSTRUCTION, THE PRIVATE ENGINEER SHALL BE RESPONSIBLE FOR DETERMINING AN ACCEPTABLE SOLUTION AND REVISING THE PLANS FOR APPROVAL BY THE CITY.
13. THE CONTRACTOR SHALL CALL IN A LOCATION REQUEST TO UNDERGROUND SERVICE ALERT (USA), PHONE NO. 1-800-422-4133, TWO WORKING DAYS BEFORE DIGGING. NO CONSTRUCTION PERMIT WILL BE ISSUED BY THE PUBLIC WORKS DEPARTMENT INVOLVING EXCAVATION FOR UNDERGROUND FACILITIES UNLESS THE APPLICANT HAS BEEN PROVIDED AN INQUIRY IDENTIFICATION NUMBER BY U.S.A.
14. IN RESIDENTIAL AREAS 6" X 6" OR 6" DIAMETER BLOCKOUTS FOR MAILBOXES ARE REQUIRED IN CURB SIDEWALK 1'0" TO 1'4" FROM CURB FACE AT THE PROPERTY LINE BETWEEN ADJACENT RESIDENCES.
15. THE PRIVATE *DEVELOPER SHALL BE RESPONSIBLE FOR* PRESERVING OR RE-ESTABLISHING AND REFERENCING SURVEY MONUMENTS DESTROYED, DISTURBED OR BURIED AS A RESULT OF CONSTRUCTION SHOWN HEREON.
16. ON ALL AREAS WITHIN PUBLIC RIGHT OF WAY WHERE THE FILL IN ONE (1) FOOT OR GREATER, A LETTER WILL BE REQUIRED FROM THE SOILS ENGINEER, CERTIFYING THE COMPACTION OF THE FILL BELOW SUBGRADE, PRIOR TO ISSUANCE OF THE CONSTRUCTION PERMIT/CUT SHEETS.
17. DEVELOPER TO GIVE CITY WATER DIVISION FIVE (5) WORKING DAYS WRITTEN NOTICE PRIOR TO START OF CONSTRUCTION AND TO ALLOW CITY TEN (10) WORKING DAYS FOR COMPLETION OF WORK - (787-7611)

CONSTRUCTION NOTES

(1) CONSTRUCT STANDARD 200, CURB AND GUTTER (6"C.F.) TYPE I
(2) CONSTRUCT STANDARD 325, CURB SIDEWALK
(3) CONSTRUCT STANDARD 220 CROSS GUTTER
(4) CONSTRUCT STANDARD 304 WHEELCHAIR RAMP
(5) CONSTRUCT A.C. PAVEMENT OVER CRUSHED AGGREGATE BASE PER TYPICAL SECTION (1)
(6) CONSTRUCT 2"X4" REDWOOD HEADER.
(7) CONSTRUCT BARRICADE STANDARD NO. 180
(8) PLANT STREET TREES TO THE SPECIFICATIONS OF THE PARK AND RECREATION DEPARTMENT.

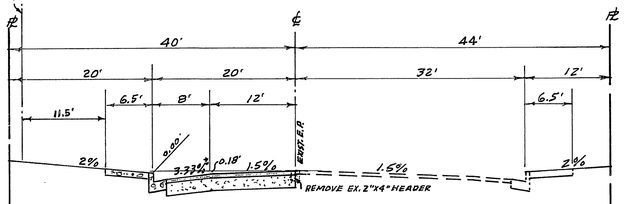

(1) Const. 3" A.C. Over 12" Crushed Agg. Base
or 3½" A.C. over 11" Crushed Agg. Base
Per S.R. # 1291, R = 12

TYPICAL SECTION - GOLDEN AVE.
T.I. = 6.0

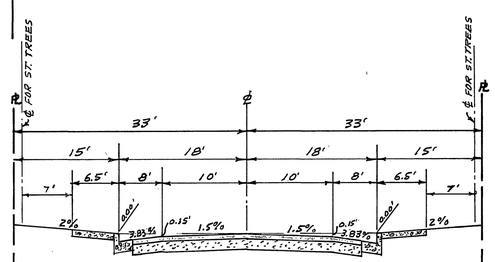

RANCHO LOMA DRIVE
RANCHO CORTO DRIVE
RANCHO LA BREA DRIVE
TYPICAL SECTION
T.I. = 5.0

(1) Const. 2½" A.C. Over 9½" Crushed Agg. Base
Or 3" A.C. Over 8½" Crushed Agg. Base
Per S.R. # 1291, R = 12

REGISTERED PROFESSIONAL ENGINEER JOHN JORDAN EXPIRES 3-31-90 No. 27983 CIVIL STATE OF CALIFORNIA

NOTICE TO CONTRACTOR

1. THE EXISTENCE AND LOCATION OF ANY UNDERGROUND UTILITY PIPES OR STRUCTURES SHOWN ON THESE PLANS ARE OBTAINED BY A SEARCH OF THE AVAILABLE RECORDS. TO THE BEST OF OUR KNOWLEDGE, THERE ARE NO EXISTING UTILITIES EXCEPT THOSE SHOWN ON THESE PLANS.
2. THE CONTRACTOR IS REQUIRED TO TAKE DUE PRECAUTIONARY MEASURES TO PROTECT THE UTILITY LINES SHOWN AND ANY OTHER LINES NOT OF RECORD OR NOT SHOWN ON THESE PLANS.
3. CALL UNDERGROUND SERVICE ALERT (USA) 1-800-422-4133 AT LEAST 48 HOURS PRIOR TO EXCAVATION

AS BUILT 7/6/90 INDEX C.S.

BENCH MARK ELEV. 697.682
BRASS DISK SET IN CONC. HEADWALL 1200' ± W'LY FROM ℄ PIERCE 13'± N'LY FROM ℄ A.T. & S.F. R/R STAMPED U.S.C.&G.S. B.M. J 38 1924 RIV. B.M. 601-30-69

ALBERT A. WEBB ASSOCIATES
CIVIL ENGINEERS
3788 McCRAY STREET
RIVERSIDE, CALIFORNIA
(714) 686-0860

APPROVED BY JOHN JORDAN DATE 11-29-85
R.E. No. 27983
W.O. 85-64 FOR: CONCORDIA DEV. F.B. 1053

MARK	REVISIONS	APPR.	DATE
2	ADDED SHT 6 & 6 FOR PED BRIDGE OVERCROSSING & DRAIN CHANNEL	VLK	1/6/87
1	ADDED ST. STRUCTURAL SECTIONS 7-5-86	VLK	8/18/86

DESIGNED BY BEL DRAWN BY BEL CHECKED BY

CITY OF RIVERSIDE, CALIFORNIA
PUBLIC WORKS DEPARTMENT

APPROVED BY	BY	DATE
PRINCIPAL ENGINEER		11-29-85
PARK DEPARTMENT		4-23-86
TRAFFIC DIVISION		5-23-86
CHIEF PUB. WKS. ENGR.		7-7-86

APPROVED BY
DIRECTOR OF PUBLIC WORKS
DATE JUNE 6, 1986

STREET PLAN AND PROFILE
TRACT 20866-1
INDEX

SCALE: NONE

ACCOUNT No.
DRAWING NUMBER R-2775
SHEET 1 OF 6
85-64-A

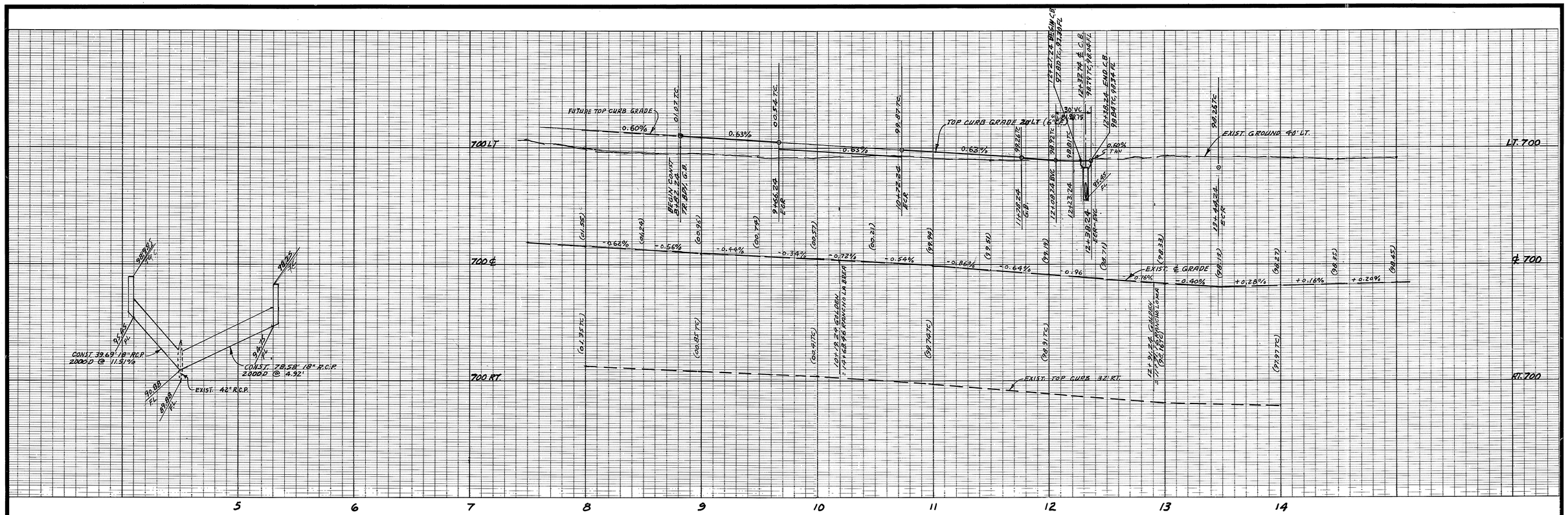

CURB CURVE DATA				
NO	Δ	R	T	L
1	90°00'00"	35'	35.00'	54.98'

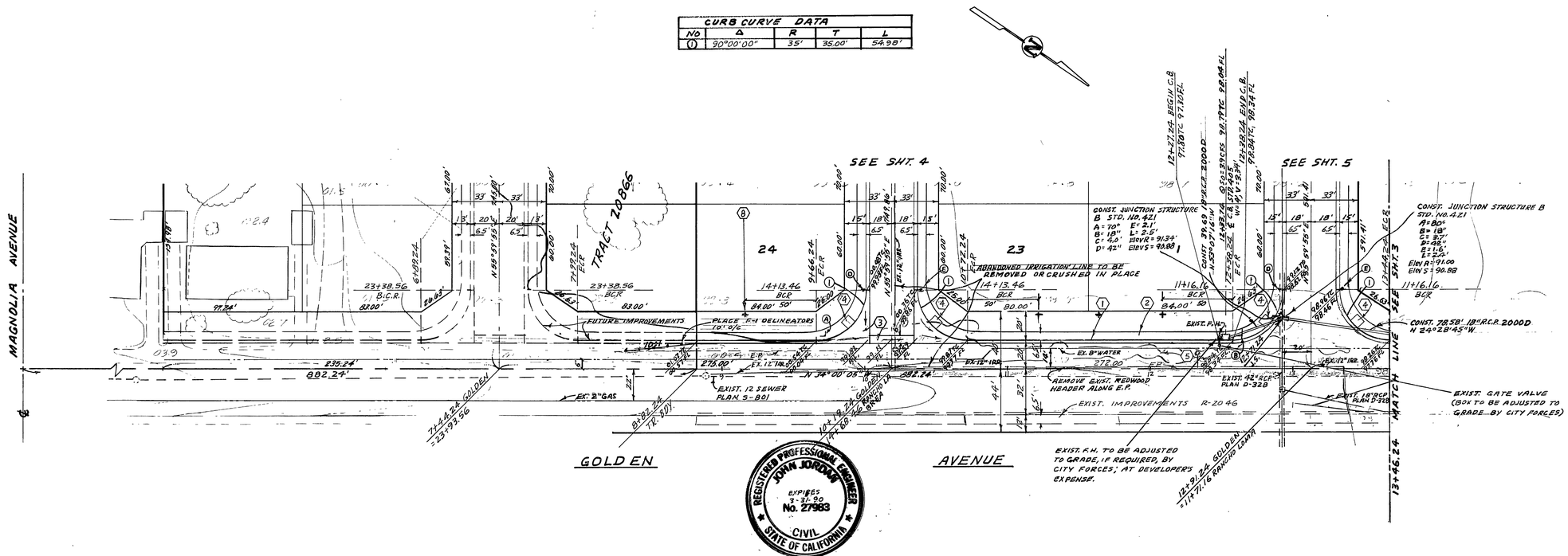

REGISTERED PROFESSIONAL ENGINEER JOHN JORDAN EXPIRES 3-31-90 No. 27983 CIVIL STATE OF CALIFORNIA

AS BUILT 7/5/90 RCM INDEXED C.S.

CITY OF RIVERSIDE
WATER SYSTEM
ASST. David V. Garcia 5-16-86
SIGNED DATE

BENCH MARK ELEV. 697.682
BRASS DISK SET IN CONC. HEADWALL 1200'± W'LY FROM ℄ PIERCE 13'± N'LY FROM ℄ A.T. & S.F. R/R STAMPED U.S.C.&G.S. B.M. J38 1924. RIV. B.M. 601-30-69

ALBERT A. WEBB ASSOCIATES
CIVIL ENGINEERS
3788 McCRAY STREET
RIVERSIDE, CALIFORNIA
(714) 686-1070
APPROVED BY John Jordan DATE 1-25-85
R.E. No. 27983
W.O. 85-64 FOR: CONCORDIA DEV. F.B. 1053

MARK	REVISIONS	APPR.	DATE

DESIGNED BY BEL DRAWN BY BEL CHECKED BY Bel

CITY OF RIVERSIDE, CALIFORNIA
DEPARTMENT OF PUBLIC WORKS

APPROVED BY	BY	DATE
PRINCIPAL ENGINEER		5/23
PARK DEPARTMENT		4-28-86
TRAFFIC DIVISION		5-23-86
CHIEF PUB. WKS. ENGR.		4/1/86

APPROVED BY William D. Gardner
DIRECTOR OF PUBLIC WORKS
DATE JUNE 6, 1986

STREET PLAN AND PROFILE
TRACT 20866-1
GOLDEN AVENUE
STA. 8+82.24 AND 13+46.24
SCALE: 1" = 40' HORIZ. - 1" = 4' VERT.

ACCOUNT No.
DRAWING NUMBER R-2775
SHEET 2 OF 6
85-64-A

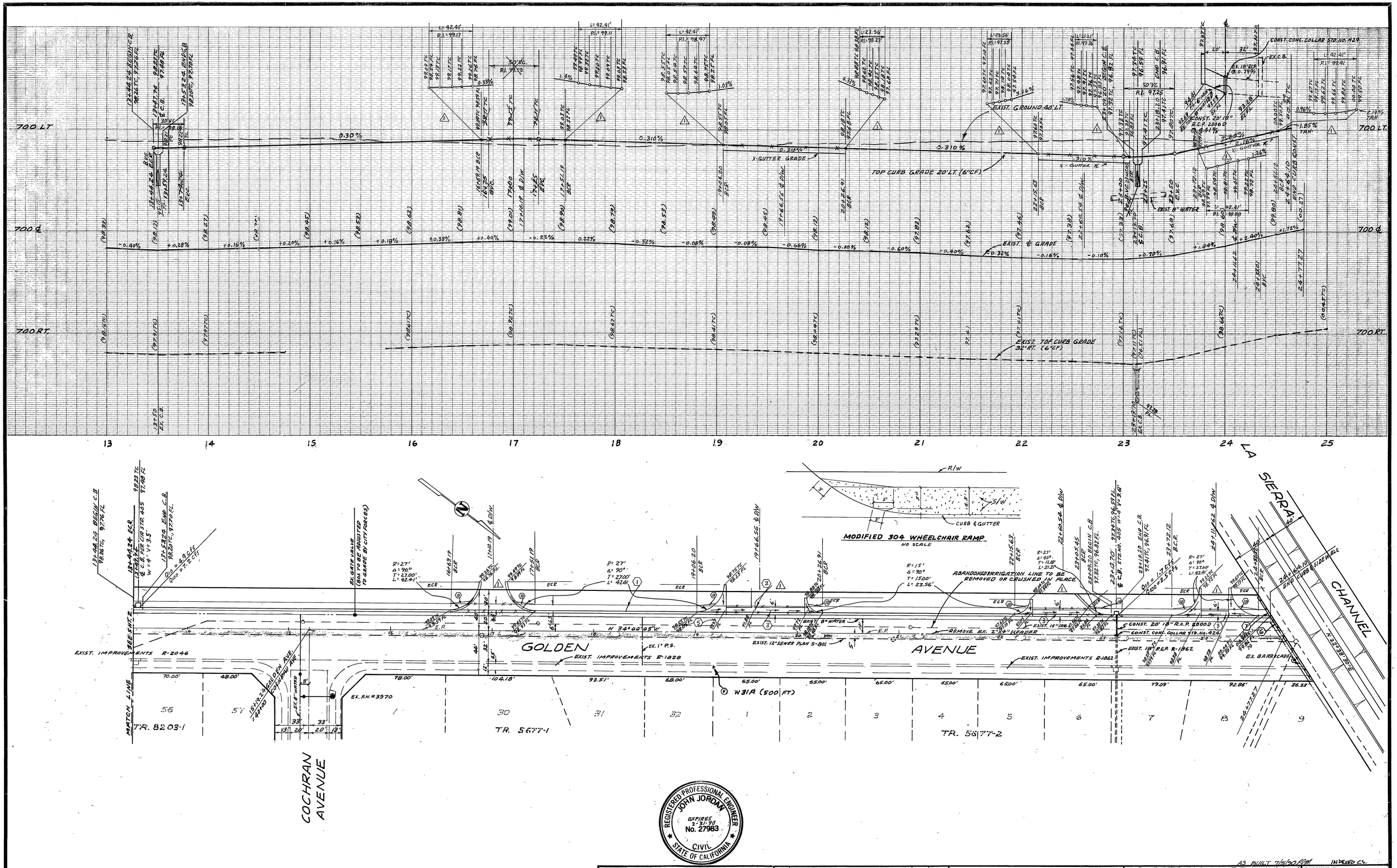

REGISTERED PROFESSIONAL ENGINEER
JOHN JORDAN
EXPIRES 3-31-90
No. 27983
CIVIL
STATE OF CALIFORNIA

AS BUILT 7/5/90 RM INDEXED C.S.

CITY OF RIVERSIDE WATER SYSTEM	BENCH MARK ELEV. 697.682 BRASS DISK SET IN CONC. HEADWALL 1200'± W'LY FROM ℄ PIERCE 13'± N'LY FROM ℄ A.T. & S.F. R/R STAMPED U.S.C.&G.S. B.M. 138 1924. RIV. B.M. 601-30-69	ALBERT A. WEBB ASSOCIATES CIVIL ENGINEERS 3788 McCRAY STREET RIVERSIDE, CALIFORNIA (714) 686-1070 APPROVED BY John Jordan DATE 11-25-85 R.E. No. 27983	CITY OF RIVERSIDE, CALIFORNIA PUBLIC WORKS DEPARTMENT
SIGNED David V. Garcia 5-16-86 DATE		W.O. 85-64 FOR: CONCORDIA DEV. F.B. 1053	APPROVED BY William B. Gardner DIRECTOR OF PUBLIC WORKS DATE JUNE 6, 1986

MARK	REVISIONS	APPR.	DATE
1	Added Driveways for School 7-11-86 BEL	WLW	7/16/86

DESIGNED BY BEL DRAWN BY BEL CHECKED BY BEL

APPROVED BY	BY	DATE
PRINCIPAL ENGINEER		5/23
PARK DEPARTMENT		4-28-86
TRAFFIC DIVISION		5-23-86
CHIEF PUB. WKS. ENGR.	WLW	6/3/86

STREET PLAN & PROFILE
TRACT 20866-1
GOLDEN AVENUE
STA. 13+46.24 TO STA. 24+77.27
SCALE: 1" = 40' HORIZ., 1" = 4' VERT.

ACCOUNT No.
DRAWING NUMBER R-2775
SHEET 3 OF 6
85-64-A

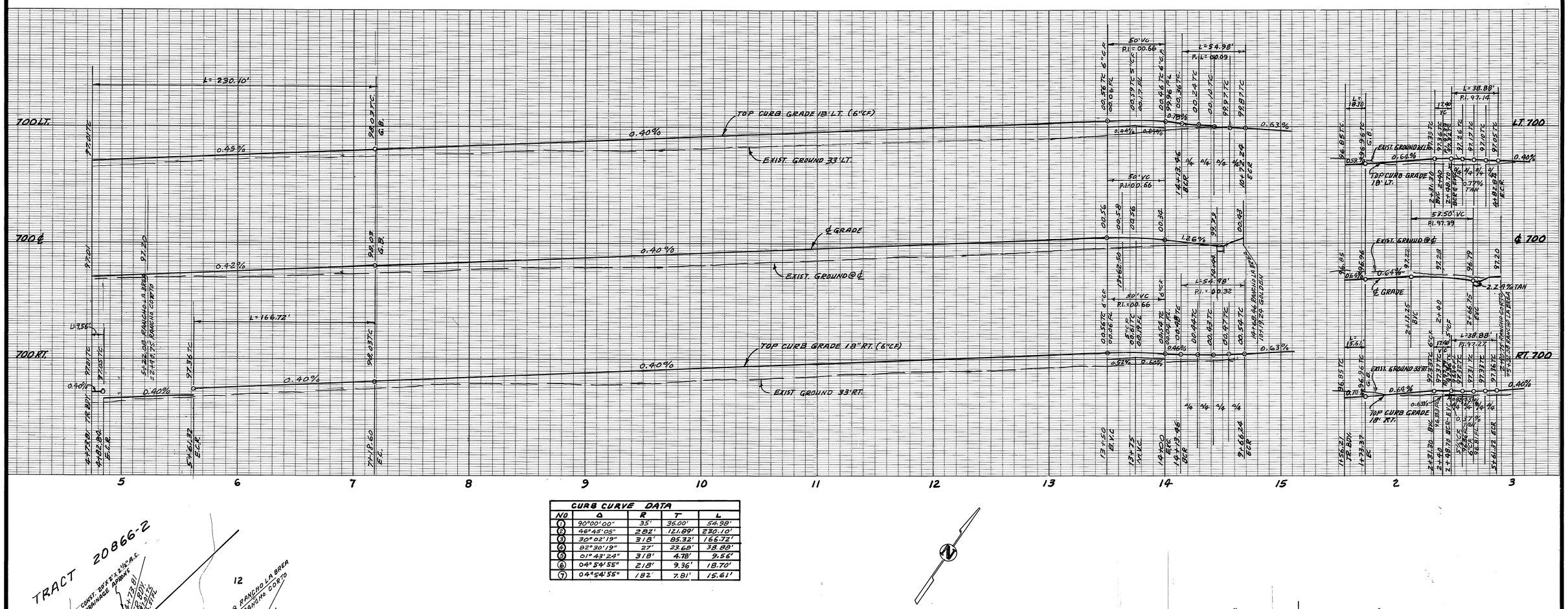

CURB CURVE DATA				
NO	Δ	R	T	L
1	90°00'00"	35'	35.00'	54.98'
2	46°45'05"	282'	121.89'	230.10'
3	30°02'19"	318'	85.32'	166.72'
4	82°30'19"	27'	23.68'	38.88'
5	01°43'24"	318'	4.78'	9.56'
6	04°54'55"	218'	9.36'	18.70'
7	04°54'55"	182'	7.81'	15.61'

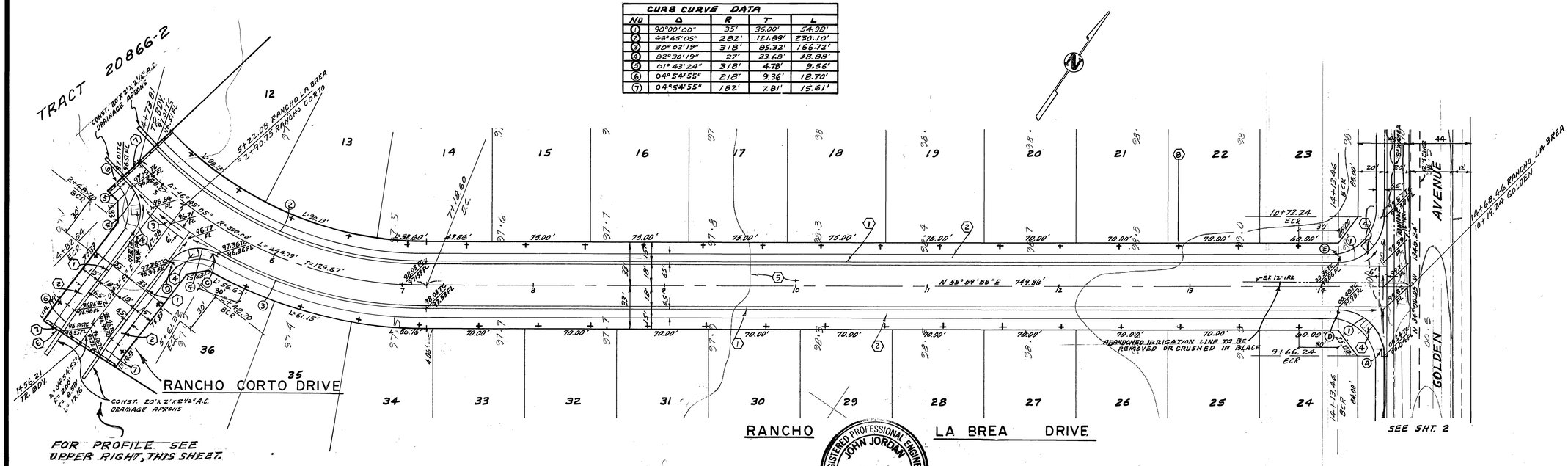

REGISTERED PROFESSIONAL ENGINEER JOHN JORDAN EXPIRES 12-31-90 No. 27983 CIVIL STATE OF CALIFORNIA

BENCH MARK ELEV. 697.682
BRASS DISK SET IN CONC. HEADWALL 1200'± W'LY FROM ℄ PIERCE 13'± N'LY FROM ℄ A.T. & S.F. R/R STA MARD U.S.C. & G.S. B.M. J38 1924. RIV. B.M. 60'-30'-69

ALBERT A. WEBB ASSOCIATES
CIVIL ENGINEERS
3788 McCRAY STREET
RIVERSIDE, CALIFORNIA
(714) 686-1205

APPROVED BY John Jordan DATE 11-25-85
R.E. No. 27983

W.O. 85-64 FOR: CONCORDIA DEV. F.B. 1053

MARK	REVISIONS	APPR.	DATE

DESIGNED BY BEL DRAWN BY BEL CHECKED BY BeDoJ

CITY OF RIVERSIDE, CALIFORNIA
DEPARTMENT OF PUBLIC WORKS

APPROVED BY	BY	DATE
PRINCIPAL ENGINEER		
PARK DEPARTMENT	JB	4-15-86
TRAFFIC DIVISION		5-23-86
CHIEF PUB. WKS. ENGR.		4/1/86

APPROVED BY William D. Gardner
DIRECTOR OF PUBLIC WORKS
DATE JUNE 6, 1986

AS BUILT 7/6/90 INDEXED C.S.

STREET PLAN AND PROFILE
TRACT 20866-1
RANCHO LA BREA DRIVE
RANCHO CORTO DRIVE
STA. 4+73.81 TO STA. 14+68.46
SCALE: 1" = 40' HORIZ. - 1" = 4' VERT.

ACCOUNT No.
DRAWING NUMBER R-2775
SHEET 4 OF 62
85-64-A

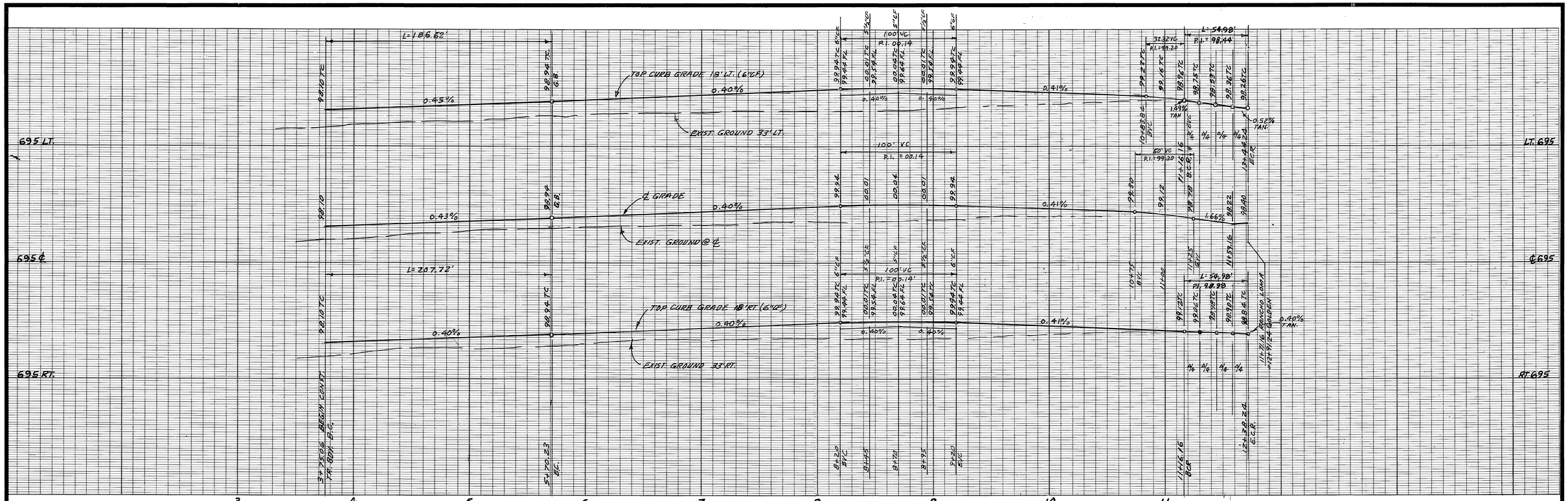

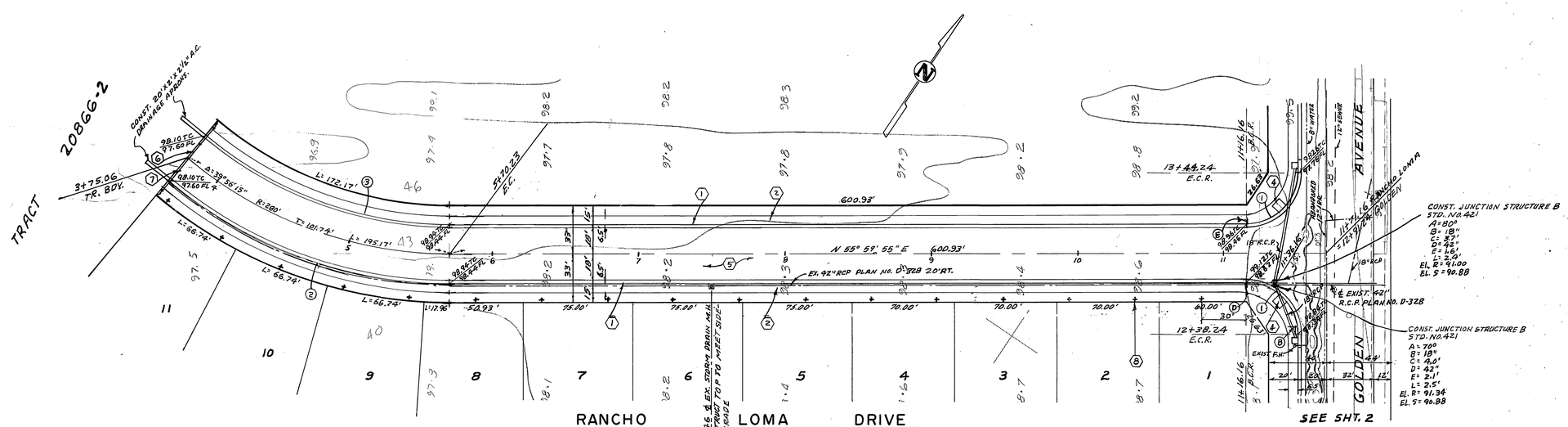

CURB CURVE DATA				
NO	Δ	R	T	L
1	90°00'00"	35'	35.00'	54.98'
2	39°56'15"	298'	108.28'	207.72'
3	39°56'15"	262'	95.20'	186.62'

REGISTERED PROFESSIONAL ENGINEER JOHN JORDAN EXPIRES 3-31-90 No. 27983 CIVIL STATE OF CALIFORNIA

BENCH MARK ELEV. 697.682
BRASS DISK SET IN CONC. HEADWALL 1200'± W'LY FROM ℄ PIERCE 13'± N'LY FROM ℄ A.T. & S.F. R/R STAMPED U.S.C.&G.S. B.M. J 38 1924. RIV. B.M. 601-30-69

ALBERT A. WEBB ASSOCIATES
CIVIL ENGINEERS
3728 McCRAY STREET
RIVERSIDE, CALIFORNIA
(714) 686-1070
APPROVED BY John Jordan DATE 11-25-85
R.E. No. 27983
W.O. 85-64 FOR: CONCORDIA DEV. F.B. 1053

MARK	REVISIONS	APPR.	DATE

DESIGNED BY BEL DRAWN BY BEL CHECKED BY Bob

CITY OF RIVERSIDE, CALIFORNIA
DEPARTMENT OF PUBLIC WORKS

APPROVED BY	BY	DATE
PRINCIPAL ENGINEER		
PARK DEPARTMENT	JG	4-25-86
TRAFFIC DIVISION		5-25-86
CHIEF PUB. WKS. ENGR.		
		4/5/86

APPROVED BY William D. Gardner
DIRECTOR OF PUBLIC WORKS
DATE JUNE 6, 1986

AS BUILT 7/16/90 RM INDEXED G.S.

STREET PLAN AND PROFILE
TRACT 20866-1
RANCHO LOMA DRIVE
STA. 3+75.06 TO STA. 11+71.16
SCALE: 1"= 40' HORIZ. - 1"=4' VERT.

ACCOUNT No.
DRAWING NUMBER R-2775
SHEET 5 OF 6
85-64-A

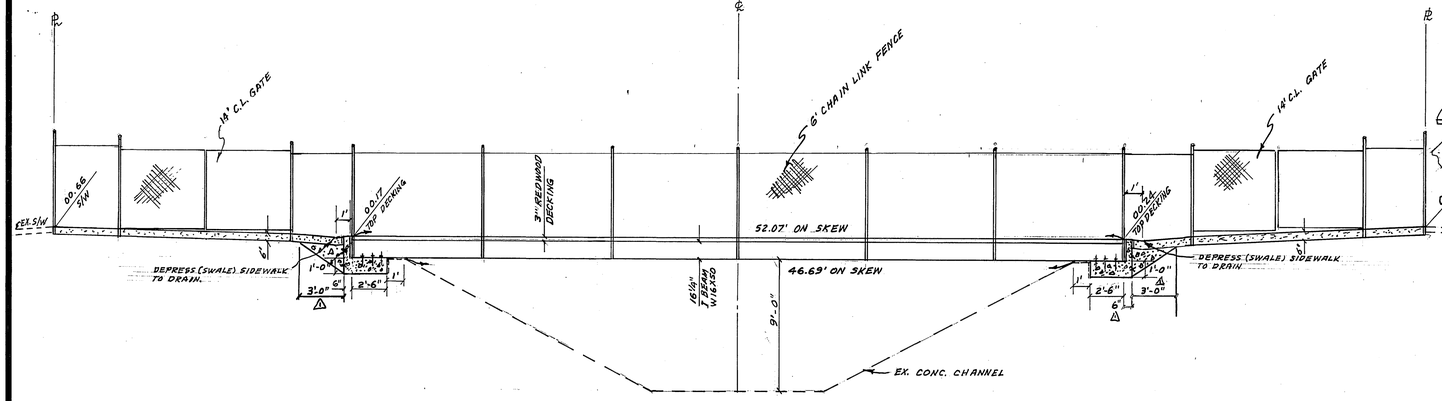

SECTION A-A

1" = 5'-0"

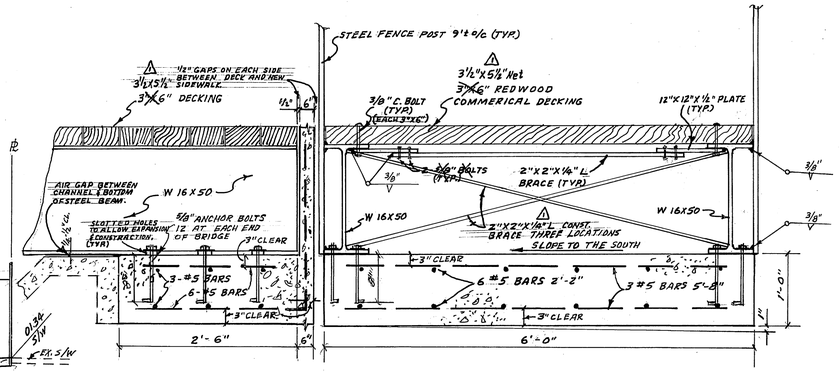

SIDE VIEW

1" = 1'-0"

END VIEW

1" = 1'-0"

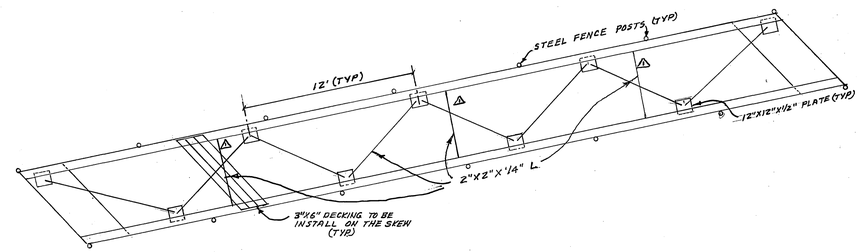

BRACING

1" = 5'-0"

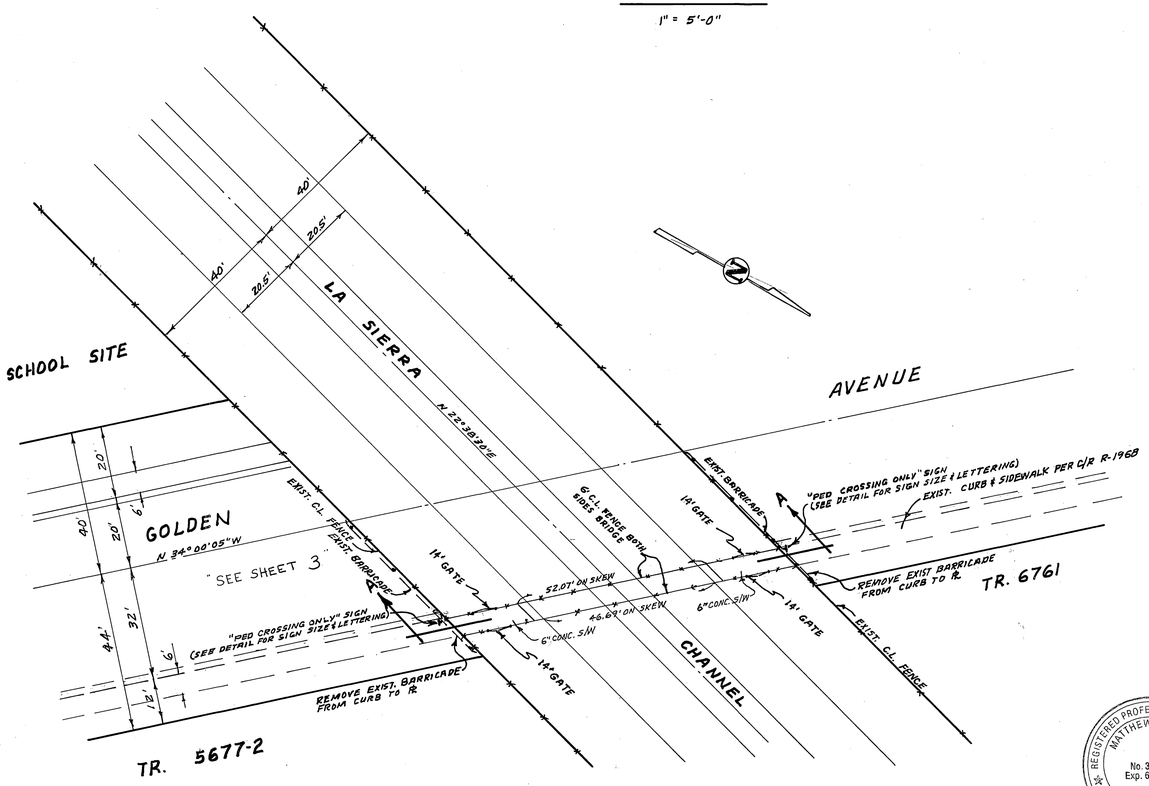

PLAN

1" = 20'-0"

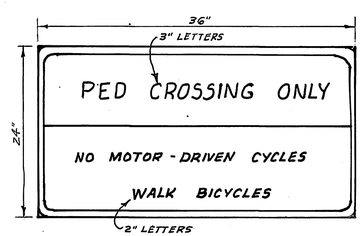

BLACK LETTERS ON WHITE BACKGROUND

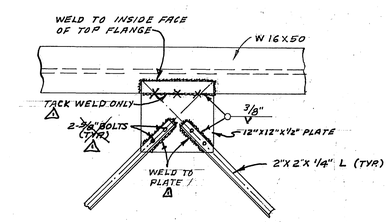

BRACE CONNECTION DETAIL

1" = 10'-0"

REGISTERED PROFESSIONAL ENGINEER MATTHEW E. WEBB No. 37385 Exp. 6-30-88 CIVIL STATE OF CALIFORNIA

BENCH MARK ELEV. 697.682
BRASS DISK SET IN CONC. HEADWALL 1200'± W 1/4 FROM ℄ PIERCE 12'± N'LY FROM ℄ A.T & S.F. R/R STAMPED U.S.C.&G.S. B.M. J38 1924 RIV. B.M. 601-30-69

ALBERT A. WEBB ASSOCIATES
CIVIL ENGINEERS
RIVERSIDE, CALIFORNIA
APPROVED BY Matthew E. Webb DATE 6/17/86
R.E. No. 37385
W.O. 85-64 FOR: F.B. 1053

MARK	REVISIONS	APPR.	DATE
1	REVISED FOOTINGS, WELDING & BRACING M.W.	WHK	4/8/91

DESIGNED BY M.W. DRAWN BY BEL CHECKED BY M.W.

CITY OF RIVERSIDE, CALIFORNIA
PUBLIC WORKS DEPARTMENT

APPROVED BY	BY	DATE
PRINCIPAL ENGINEER	—	—
PARK DEPARTMENT	—	—
TRAFFIC DIVISION	[illegible]	[illegible]
PUB. WKS. ENGR.	[illegible]	[illegible]
PLANNING	[illegible]	[illegible]

APPROVED BY William D. Harris
DIRECTOR OF PUBLIC WORKS
DATE 2-3-87

TRACT 20866-1
PEDESTRIAN BRIDGE DETAILS

SCALE: AS SHOWN

AS BUILT 7/6/90 INDEXED CS.

ACCOUNT No.
DRAWING NUMBER R-2775
SHEET 6 OF 6
85-64-A