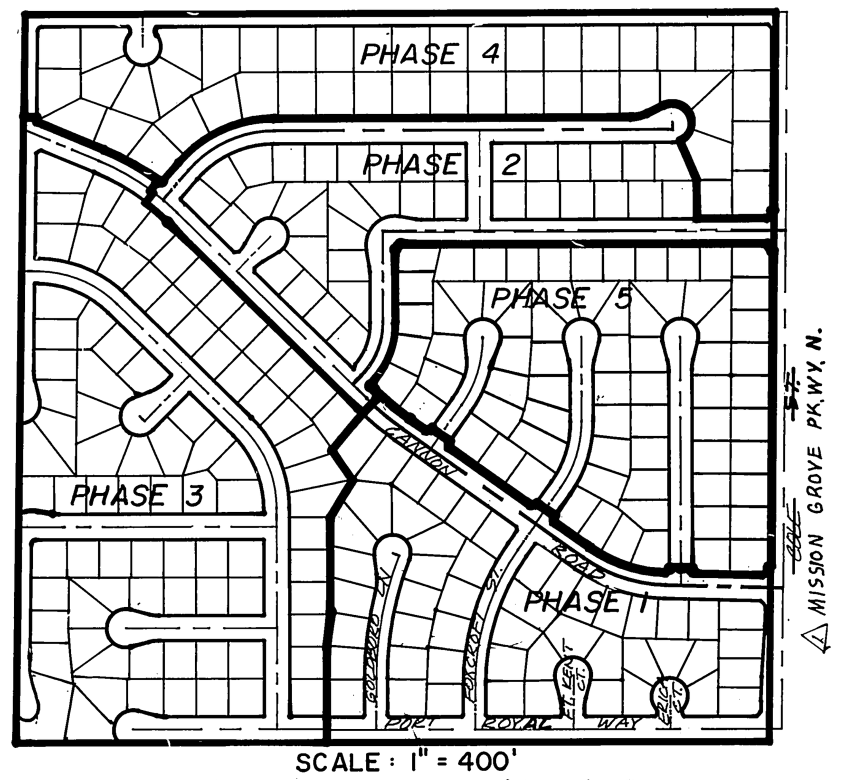

SCALE : 1" = 400'

TRACT 21403 PHASING MAP

CONSTRUCTION NOTES

1. Construct A.C. pavement over crushed aggregate base per typical section and per general note No. 6.
2. Construct curb and gutter per City of Riverside Std. Drwg. No. 200 type I (8" curb face).
3. Construct curb and gutter per City of Riverside Std. Drwg. No. 200. type I (6" curb face).
4. Construct P.C.C. cross gutter per City of Riverside Std. Drwg. No. 220.
5. Construct P.C.C. curb sidewalk per City of Riverside Std. Drwg. No. 325
6. Construct wheelchair ramp per City of Riverside Std. Drwg. No. 304.
7. Construct 8" curb (only) per City of Riverside Std. Dwg. No. 200 (Type II)
8. Remove existing A C pavement.
9. Construct barricade per City of Riverside Std. Dwg. No. 180.
10. Construct catch basin per City of Riverside Std. # 405 (as shown on plan)
11. Construct 2"x 4" redwood header
12. Install F-1 delineators at 20' o.c.
13. PLANT STREET TREES TO THE SPECIFICATIONS OF THE PARK AND RECREATION DEPARTMENT.
14. RELOCATE STREET SIGN.

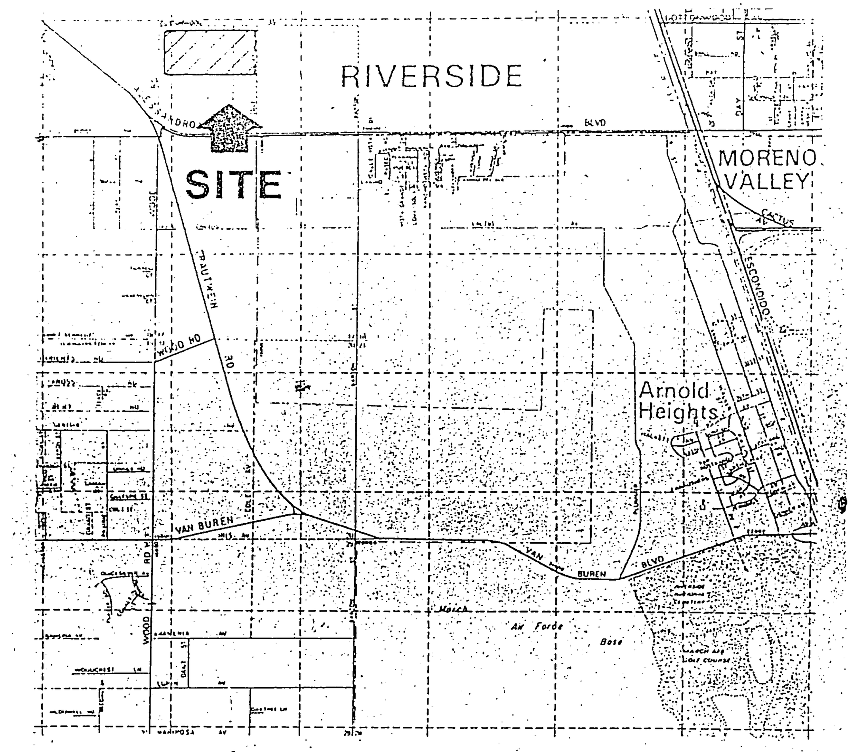

VICINITY MAP

NTS

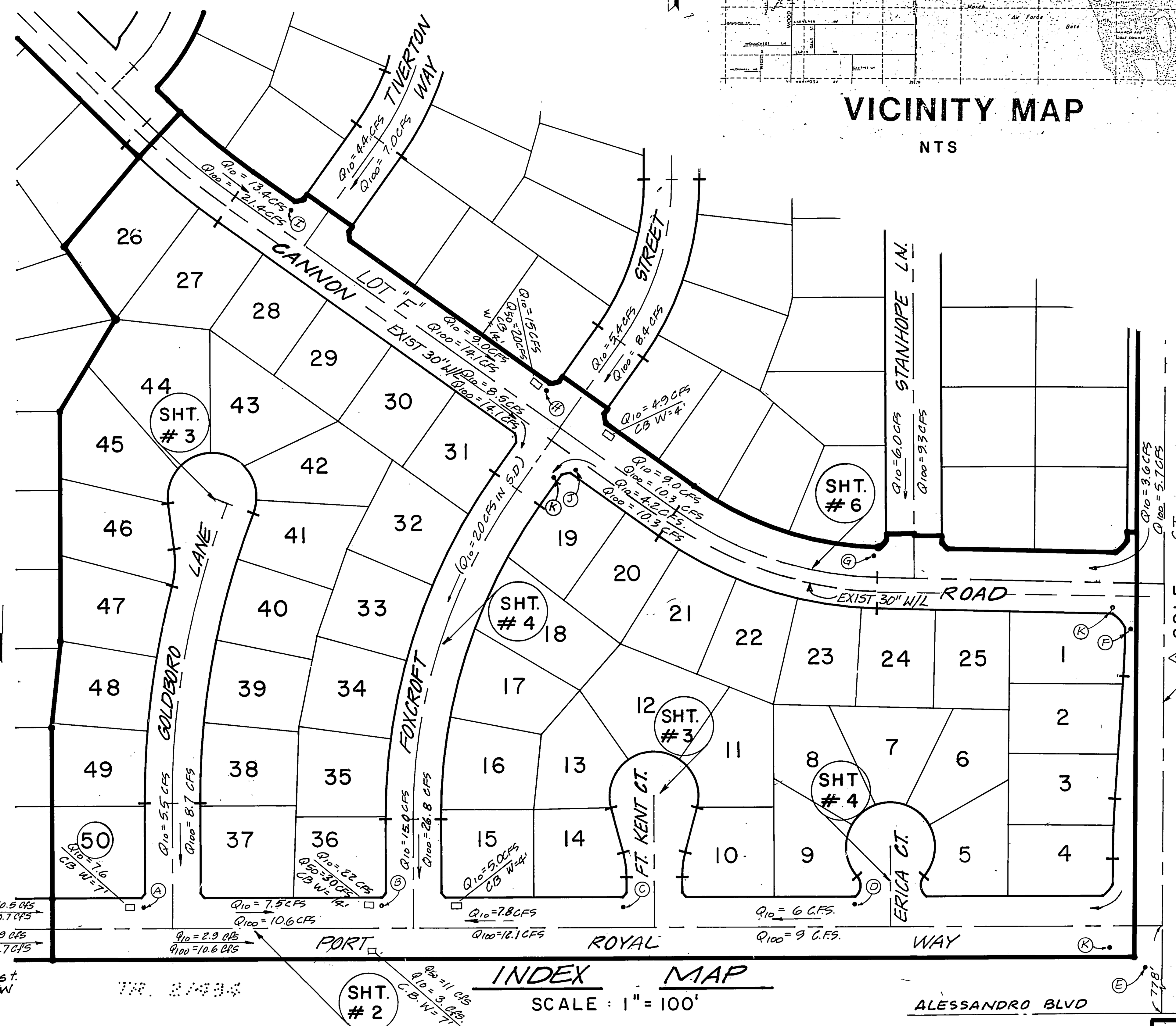

INDEX MAP

SCALE : 1" = 100'

Underground Service Alert

Call: TOLL FREE

1 - 800
422 - 4133

TWO WORKING DAYS BEFORE YOU DIG

PRIVATE ENGINEERING NOTE

CONSTRUCTION CONTRACTOR AGREES THAT IN ACCORDANCE WITH GENERALLY ACCEPTED CONSTRUCTION PRACTICES, CONSTRUCTION CONTRACTOR WILL BE REQUIRED TO ASSUME SOLE AND COMPLETE RESPONSIBILITY FOR JOB SITE CONDITIONS DURING THE COURSE OF CONSTRUCTION OF THE PROJECT, INCLUDING SAFETY OF ALL PERSONS AND PROPERTY; THAT THIS REQUIREMENT SHALL BE MADE TO APPLY CONTINUOUSLY AND NOT BE LIMITED TO NORMAL WORKING HOURS, AND CONSTRUCTION CONTRACTOR FURTHER AGREES TO DEFEND, INDEMNIFY AND HOLD DESIGN PROFESSIONAL HARMLESS FROM ANY AND ALL LIABILITY, REAL OR ALLEGED, IN CONNECTION WITH THE PERFORMANCE OF WORK ON THIS PROJECT, EXCEPTING LIABILITY ARISING FROM THE SOLE NEGLIGENCE OF DESIGN PROFESSIONAL.

GENERAL NOTES

1. It shall be the responsibility of the contractor to clear the right of way in accordance with the provisions of law as it affects each utility including irrigation lines and appurtenances and at no cost to the City.
2. Construction shall be in accordance with the City of Riverside Department of Public Works, Standard Dwg. Nº 10 and the Standard Specifications for Public Works Constr. current Edition.
3. Trim edge of existing pavement where new pavement joins to a smooth, straight line. Construct match-up paving as shown on plan and overlay paving as directed in the field to produce a smooth section.
4. Construct driveway approaches per Std. Dwg. 302. Exact size and location to be determined at the time of construction as approved by the Traffic Engineer.
5. Curb and gutter shall be staked with 3' offsets at 25' intervals.
6. The subdivider shall arrange for a soil test to be made by a soils engineer after the streets have been prepared to rough grade. Depth of base material and A.C. paving shall be determined by the City of Riverside design standards and test procedures.
7. All flagged elevations shall be staked in the field by the private engineer.
8. The private engineer signing these plans is responsible for assuring the accuracy and acceptability of the work hereon. In the event of discrepancies arising during construction, the private engineer shall be responsible for determining an acceptable solution and revising the plans for approval by the City.
9. In residential areas 6" x 6" or 6" diameter blockouts for mailboxes are required in curb sidewalk 10" to 14" from curb face at the property line between adjacent residences. For mailboxes for business, mobilehome parks or apartment houses, developer to check with the U.S.P.S. for the number and location of mailboxes.
10. The private engineer preparing these plans shall be responsible for preserving or re-establishing and referencing survey monuments destroyed, disturbed or buried as a result of construction shown hereon.
11. On all areas within public right of way where the fill is one (1) foot or greater, a letter will be required form the soils engineer, certifying the compaction of the fill below subgrade, prior to issuance of the Construction Permit/Cut Sheets.
12. All traffic signs shall be installed prior to opening the streets to traffic.
13. See "Street Lighting Plans" for quantity and location of required street lights.
14. Notice to contractor. The existence and location of any underground utility pipes or structures shown on these plans were obtained by a search of the available records. To the best of our knowledge there are no existing utilities except as shown on these plans. The contractor is required to take precautionary measures to protect the utility lines shown and any other lines not of record or not shown on these plans.
15. The developer is responsible for providing access paving. Should the developer and/or contractor decide to install the access paving prior to the City commencing its paving work, the developer shall coordinate his installation of access paving with the City inspector. Final course of paving in access area to be paid for by developer prior to the City commencing its paving operation. Developer will also install type F-1 FLEXIBLE DELINEATORS at 20' on centers on outgoing taper.
16. Contractor agrees that he shall assume sole and complete responsibility for job site conditions during the course of construction of this project, including safety of all persons and property; that this requirement shall apply continuously and not be limited to normal working hours; and that the contractor shall defend, indemnify and hold the owner and the engineer harmless from any and all liability, real or alleged, in connection with the performance of work on this project, excepting for liability arising from the sole negligence of the owner or the engineer.
17. All related work shall conform to the City of Riverside Park and Recreation Department Standards.
18. Contact the park projects inspector a minimum of 48 hours in advance at 787-7223 to schedule inspections. Inspections shall be required: A) When plant locations have been spotted in the field prior to digging plant pits B) While digging plant pits and planting/relocation trees, C) After planting and all other indicatied or specified work has been completed for start of maintenance, and D) At end of maintenance/field acceptance (developer will be released from maintenance only upon receipt of written notification from the city that the park and recreation department is assuming maintenance responsibilities).
19. The developer shall maintain all plantings for minimum period of one year
20. Street tree planting shall be as follows: (See Note Nº 24 below)

Street Name	Botanical Name/Commom Name	Size	Spacing	Req.
⚠1 MISSION GROVE PKWY N. ~~COLE ST.~~	PINUS CANARIENSIS/CANARY IS. PINE	15GAL.	45'	5
PORT ROYAL WAY	MAGNOLIA GRANDIFLORA/MAGNOLIA MAGESTIC BEAUTY	15GAL.	45'	14
ERICA CT.	PINUS CANARIENSIS/CANARY IS. PINE	15GAL.	45'	5
FT KENT CT.	PINUS CANARIENSIS/CANARY IS. PINE	15GAL.	45'	7
FOXCROFT ST.	PINUS CANARIENSIS/CANARY IS. PINE	15GAL	45'	21
GOLDBORO LN.	PINUS CANARIENSIS/CANARY IS. PINE	15GAL.	45'	22
CANNON RD.	MAGNOLIA GRANDIFLORA/MAGNOLIA MAGESTIC BEAUTY	15GAL.	45'	41

21. A public works department permit is required prior to commencement of tree relocation and/or removal work. For all trees within the ultimate pavement area, backfill of all holes is to be inspected by the city for property compaction.
22. Contractor is to give the City Water Division 24 hours notice prior to irrigation pipeline inspection. Contact Dan Parks at 787-7428.
23. FINAL STRIPING FOR TRAFFIC CONTROL AND/OR PAVEMENT MARKING TO BE THE RESPONSIBILITY OF THE DEVELOPER.
24. ⚠1 MISSION GROVE PKWY N. ~~Cole St.~~ Median: See Landscape Plan Number PC 2089 prepared by J. F. Davidson & Assoc., Inc. Phone: (714)686-0844.
25. ~~See Traffic signal plan X-494 for traffic signal facilities and striping.~~

Street Sign	Schedule	
PORT ROYAL WAY	100E	A
GOLDBORO LANE	7200	A
PORT ROYAL WAY	200E	B
FOXCROFT ST.	7200	B
PORT ROYAL WAY	200E	C
FT. KENT CT.	7200	C
PORT ROYAL WAY	200E	D
ERICA CT.	7200	D
PORT ROYAL WAY	200E	E
⚠1 ~~COLE ST.~~ MISSION GROVE PKWY N.	7200	E
⚠1 ~~COLE ST.~~ MISSION GROVE PKWY N.	7200	F
CANNON RD.	200E	F
CANNON RD.	200E	G
STANHOPE LN.	7100	G
CANNON RD.	200E	H
FOXCROFT ST. (N)	7100	H
CANNON RD.	200E	I
TIVERTON WAY	7100	I
CANNON RD.	200E	J
FOXCROFT ST. (S)	7200	J
R-1 Stop Sign (30" Octagon)		K
W-11 (LT.)		L

CONSTRUCT PER CITY/RIV. STD'S 662A & 666.

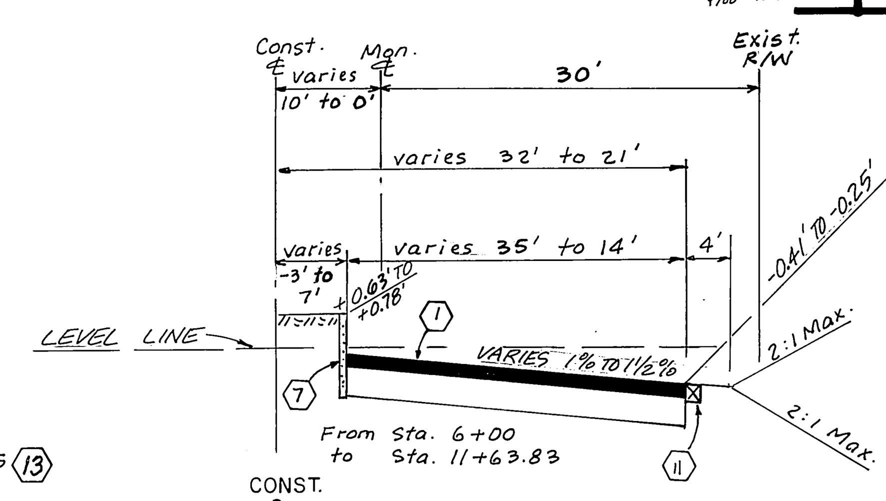

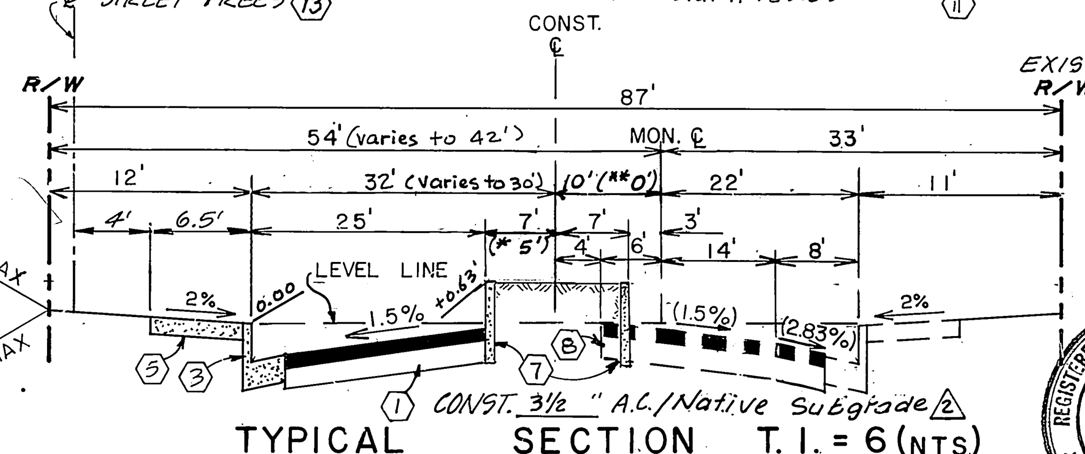

TYPICAL SECTION T. I. = 6 (NTS)

R = 71, S.R. # 1316

⚠1 ~~COLE ST.~~ MISSION GROVE PKWY NORTH

** AT STA. 10+73.66
* AT STA. 11+10.87

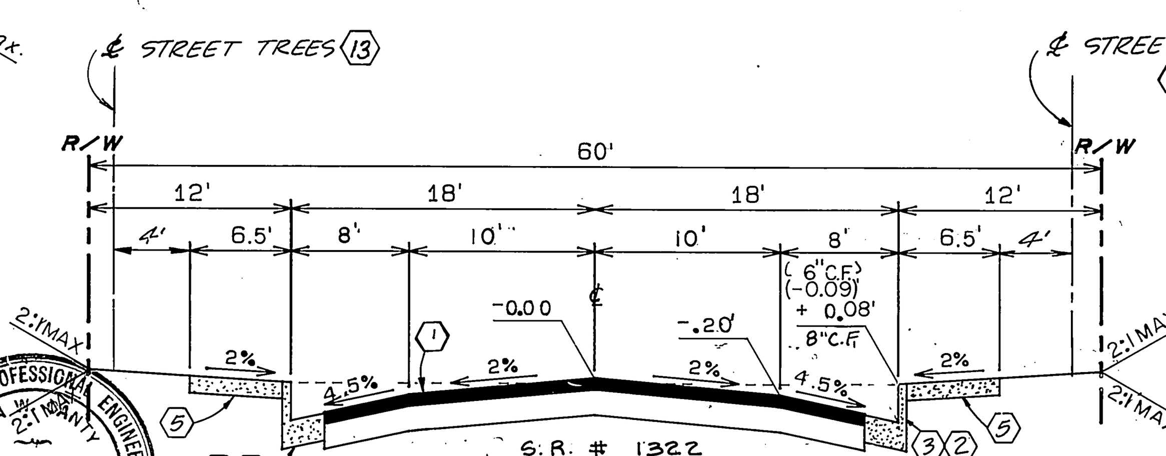

TYPICAL SECTION T.I.=5 (NTS)

ERICA CT. (R=43)
FORT KENT CT. (R=43) - FOXCROFT ST (R=55) - *GOLDBORO LANE (R=69)
Const. 3"A.C./4"C.A.B./Native Subgrade 2
*Const. 3"A.C./Native Subgrade 2

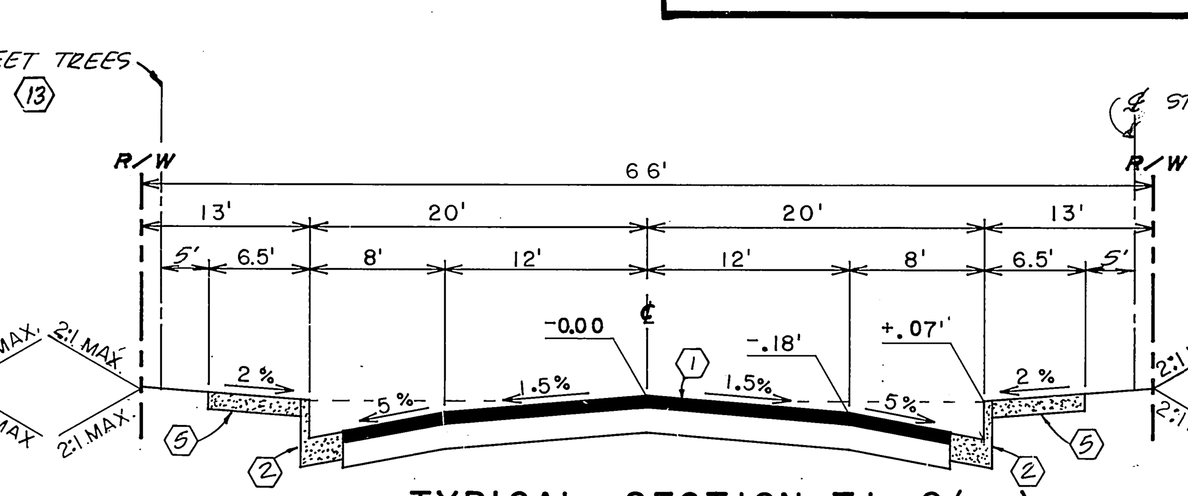

TYPICAL SECTION T.I.=6 (NTS)

CANNON ROAD Const. 3½" A.C./Native Subgrade 2
W. of Foxcroft : R = 70, SR # 1322 ; E. of Foxcroft : R = 69, S.R. # 1316

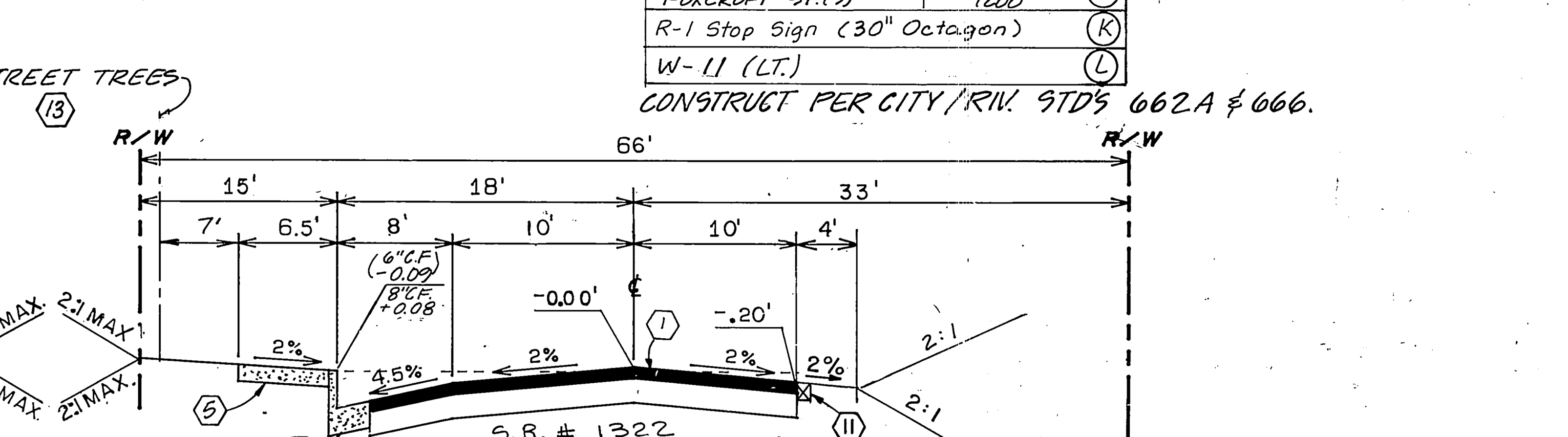

TYPICAL SECTION T.I.=5 (NTS)

PORT ROYAL WAY 2 W. of Foxcroft (R = 71), Const. 3" A.C. / Native Subgrade
2 E. of Foxcroft (R = 43), Const. 3" A.C. / 4" C.A.B. /Native Subgrade

INDEXED LH 6/30/87

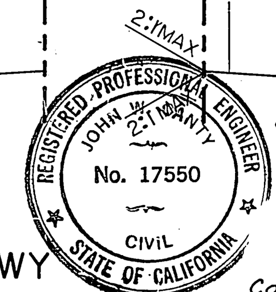

PREPARED UNDER THE DIRECTION OF: John W Canty
REGISTERED CIVIL ENGINEER NO. 17550
EXPIRATION DATE 6-30-89 DATE: 7/28/86

J F DAVIDSON ASSOCIATES, INC.
CIVIL ENGINEERS ○ SURVEYORS ○ PLANNERS
P.O. BOX 493 ■ RIVERSIDE, CA 92502 (714) 686-0844
11200 SO. MT. VERNON AVE., #D □ COLTON, CA 92324 (714) 825-1082
73-080 EL PASEO, #103 □ PALM DESERT, CA 92260 (619) 346-5691
JFD ASSOCIATES

SCALE: AS SHOWN
DATE: JULY 1986

BENCH MARK:
CITY OF RIVERSIDE BENCHMARK #F8-E P.K. NAIL & CITY TAG IN TOP OF LARGE ROCK 70' S'LY OF ALESSANDRO BLVD. & 0.60 MILE S'ELY OF VIA VISTA DR. NEAR P.P. NO. 775963 H. ELEV. = 1502.195

MARK	REVISIONS	APPR.	DATE
2	Added Street Structural Sections	FRED	
1	REVISED COLE ST. TO MISSION GROVE PK.WY.N.	FRED KWK	9/15/87

DESIGNED BY LRS DRAWN BY CMF CHECKED BY LRS

CITY OF RIVERSIDE, CALIFORNIA
DEPARTMENT OF PUBLIC WORKS

APPROVED BY	BY	DATE
PRINCIPAL ENGINEER		5-21-87
PARK DEPARTMENT		3-13-87
TRAFFIC DIVISION		5-21-87
CHIEF P. W. ENGR.		6-4 / 6/2/87

APPROVED BY Barry Beck
DIRECTOR OF PUBLIC WORKS
DATE 6/4/87

STREET PLAN & PROFILE
TRACT 21403-1
"TITLE SHEET"

PROJECT NO. R-2815
SHEET 1 OF 6
FILE NO. 86-9189 (M)

P.C. 2089

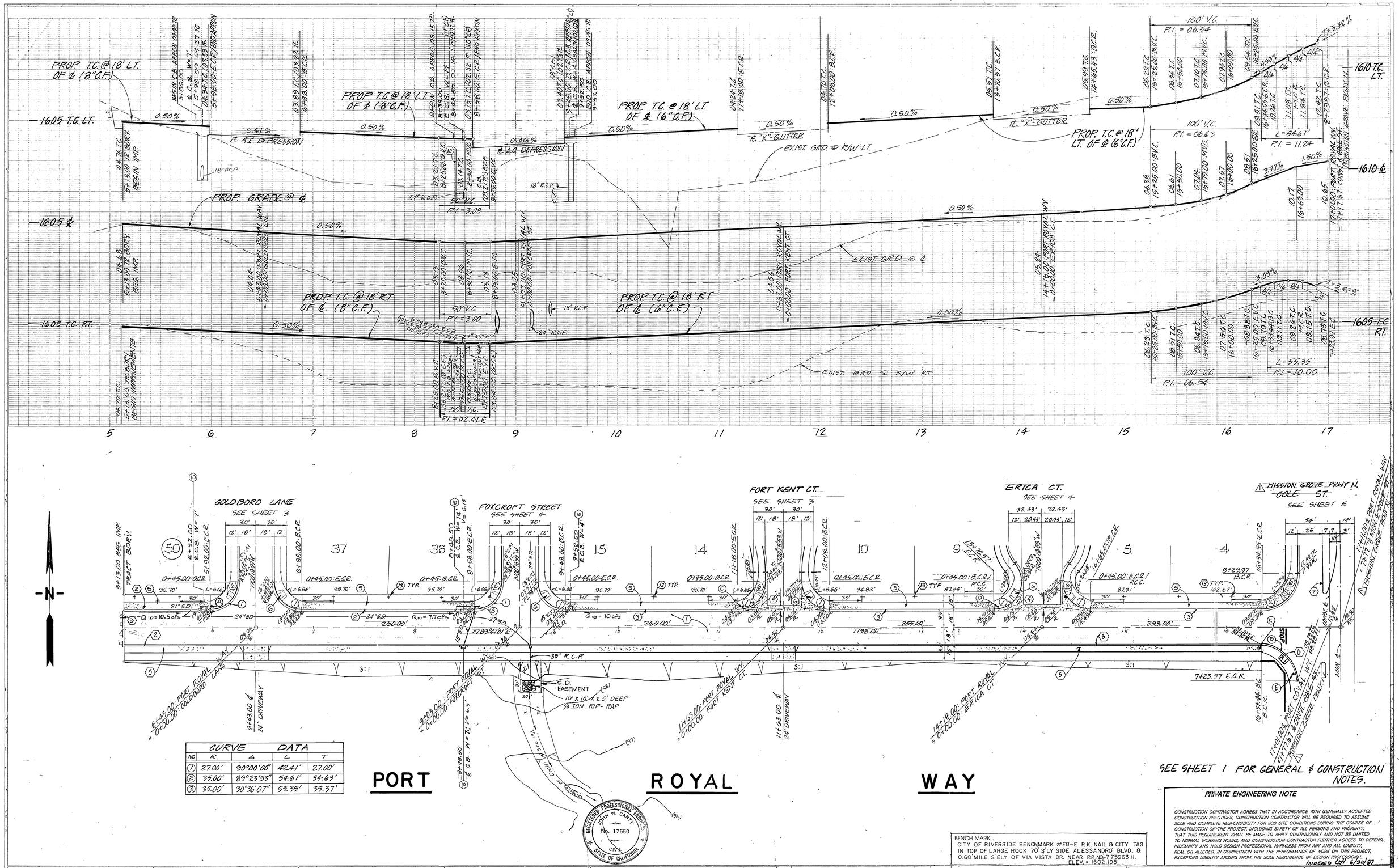

CURVE DATA				
NO	R	Δ	L	T
1	27.00'	90°00'00"	42.41'	27.00'
2	35.00'	89°23'53"	54.61'	34.63'
3	35.00'	90°36'07"	55.35'	35.37'

SEE SHEET 1 FOR GENERAL & CONSTRUCTION NOTES.

REGISTERED PROFESSIONAL ENGINEER JOHN W. CANTY No. 17550 CIVIL STATE OF CALIFORNIA

BENCH MARK.
CITY OF RIVERSIDE BENCHMARK #F8-E P.K. NAIL & CITY TAG IN TOP OF LARGE ROCK 70' S'LY SIDE ALESSANDRO BLVD. & 0.60' MILE S'ELY OF VIA VISTA DR. NEAR P.P. NO. 775963 H.
ELEV. = 1502.195

PRIVATE ENGINEERING NOTE

CONSTRUCTION CONTRACTOR AGREES THAT IN ACCORDANCE WITH GENERALLY ACCEPTED CONSTRUCTION PRACTICES, CONSTRUCTION CONTRACTOR WILL BE REQUIRED TO ASSUME SOLE AND COMPLETE RESPONSIBILITY FOR JOB SITE CONDITIONS DURING THE COURSE OF CONSTRUCTION OF THE PROJECT, INCLUDING SAFETY OF ALL PERSONS AND PROPERTY; THAT THIS REQUIREMENT SHALL BE MADE TO APPLY CONTINUOUSLY AND NOT BE LIMITED TO NORMAL WORKING HOURS, AND CONSTRUCTION CONTRACTOR FURTHER AGREES TO DEFEND, INDEMNIFY AND HOLD DESIGN PROFESSIONAL HARMLESS FROM ANY AND ALL LIABILITY, REAL OR ALLEGED, IN CONNECTION WITH THE PERFORMANCE OF WORK ON THIS PROJECT, EXCEPTING LIABILITY ARISING FROM THE SOLE NEGLIGENCE OF DESIGN PROFESSIONAL.
INDEXED LH 6/30/87

J. F. DAVIDSON ASSOCIATES
CIVIL ENGINEERS ○ SURVEYORS ○ PLANNERS
3426 TENTH STREET, RIVERSIDE, CAL. — 11200 S. MT. VERNON AVE., COLTON, CAL.
APPROVED BY: DATE: 9/28/86 — REGISTERED CIVIL NO. 17550 — EXP. DATE 6/30/89
DATE MAY 1986

MARK	REVISIONS	APPR.	DATE
1	REVISED COLE ST. TO MISSION GROVE PKWY N.		8/14/87

DESIGNED BY LRS DRAWN BY C.M.F. CHECKED BY LRS

CITY OF RIVERSIDE, CALIFORNIA
DEPARTMENT OF PUBLIC WORKS

APPROVED BY	BY	DATE
PRINCIPAL ENGINEER		5-21-87
PARK DEPARTMENT		3-13-87
TRAFFIC DIVISION		5-21-87
CHIEF P. W. ENGR.		6-4 9/4/87

APPROVED BY Barry Bed
DIRECTOR OF PUBLIC WORKS
DATE 6/4/87

STREET PLAN & PROFILE
TRACT 21403-1
PORT ROYAL WAY
HORIZ. SCALE: 1" = 40' VERT. SCALE: 1" = 4'

PROJECT NO. R-2815
SHEET 2 OF 6
FILE NO. 86-9189 (M)

P.C. 2089

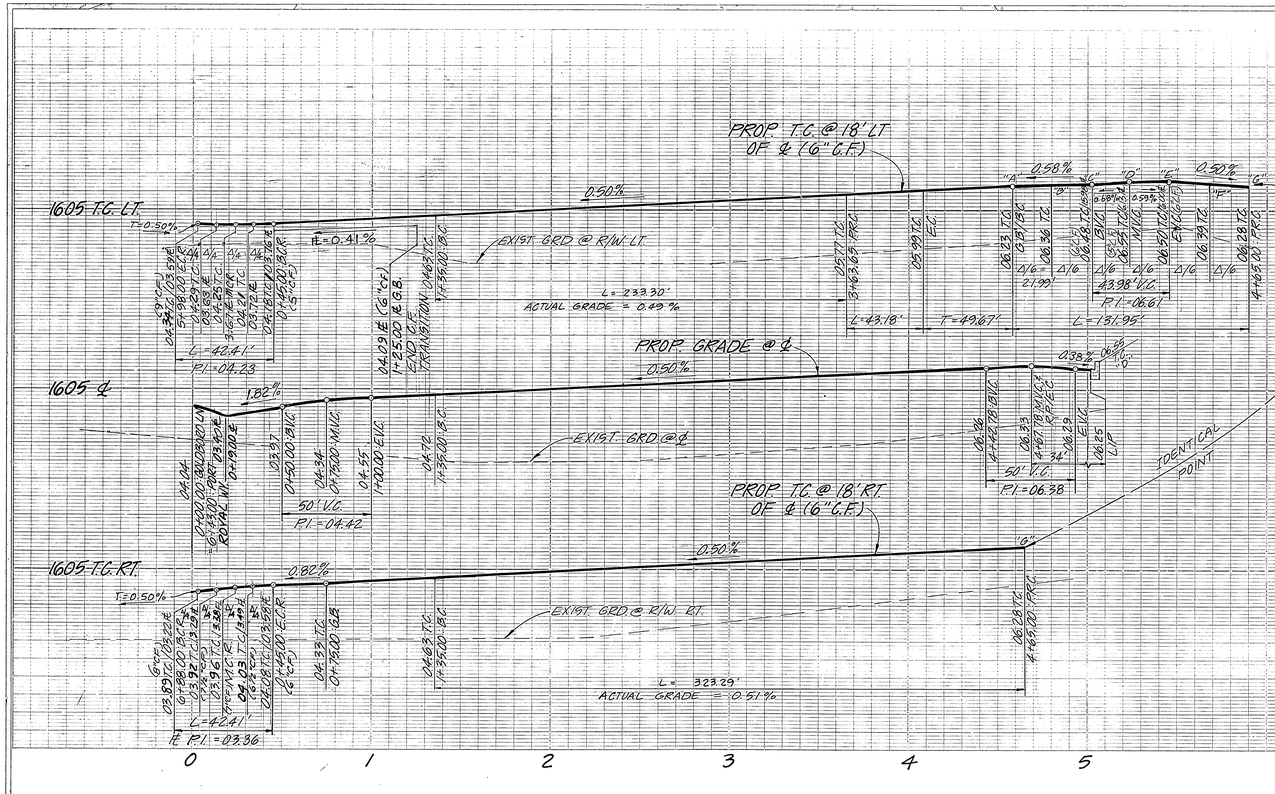

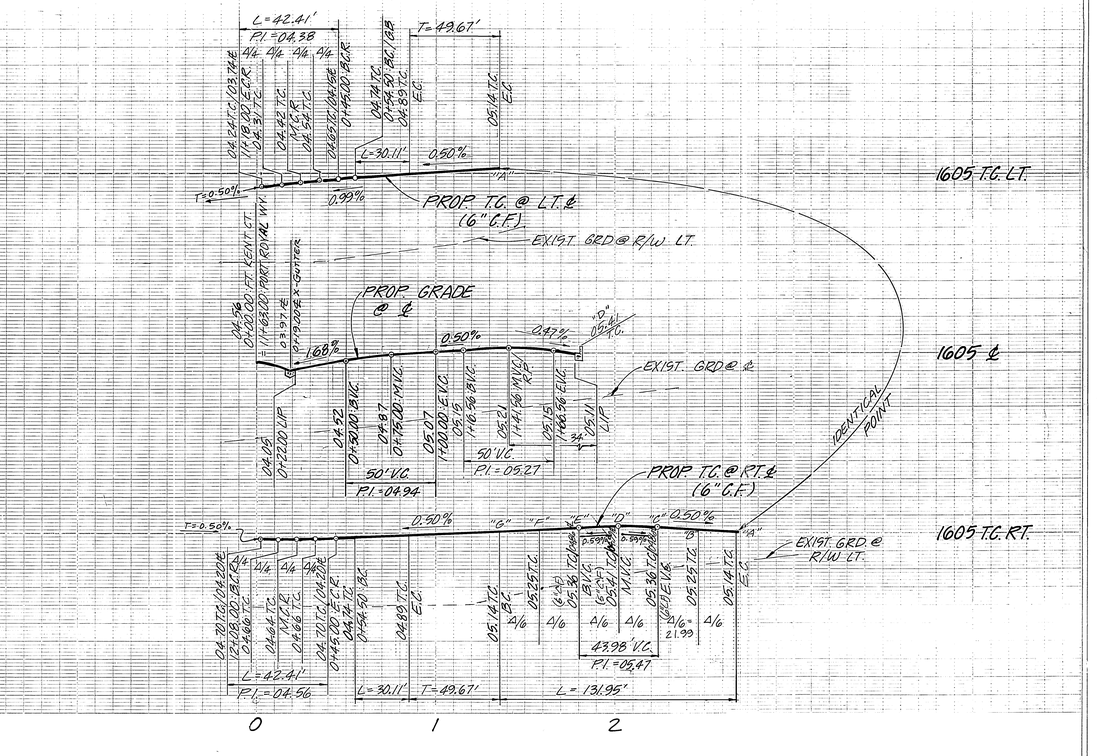

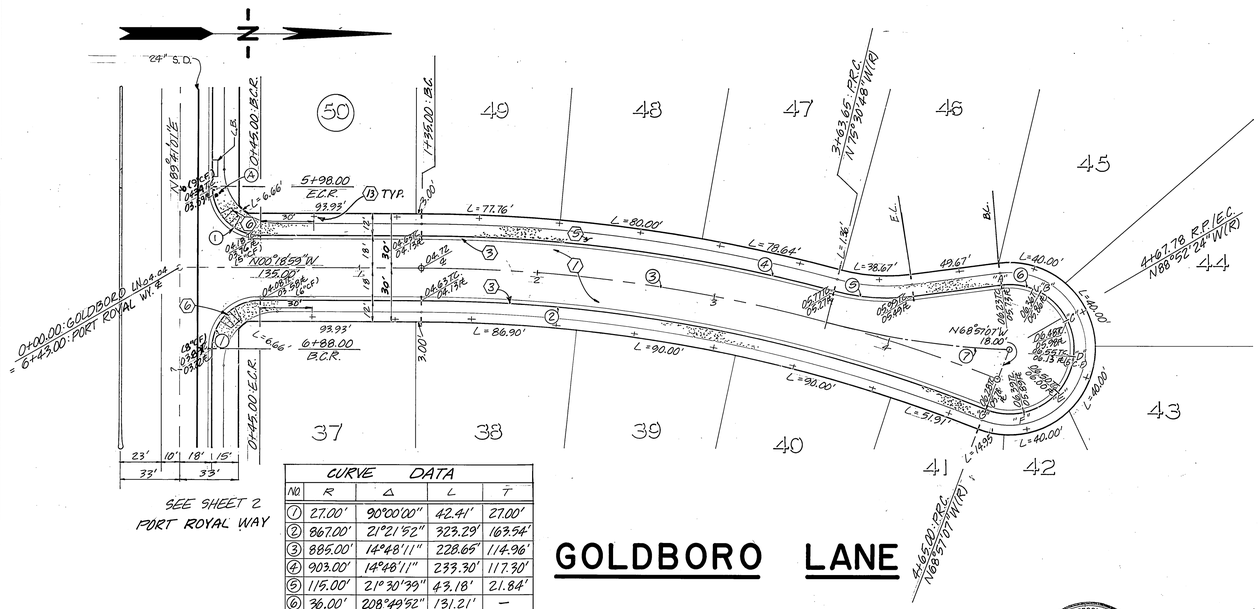

CURVE DATA				
NO	R	Δ	L	T
(1)	27.00'	90°00'00"	42.41'	27.00'
(2)	867.00'	21°21'52"	323.29'	169.54'
(3)	885.00'	14°48'11"	228.65'	114.96'
(4)	903.00'	14°48'11"	233.30'	117.30'
(5)	115.00'	21°30'39"	43.18'	21.84'
(6)	36.00'	208°49'52"	131.21'	—
(7)	446.56'	13°21'36"	104.13'	52.30'
(8)	115.00'	15°00'00"	30.11'	15.14'
(9)	30.00'	210°00'00"	131.95'	—

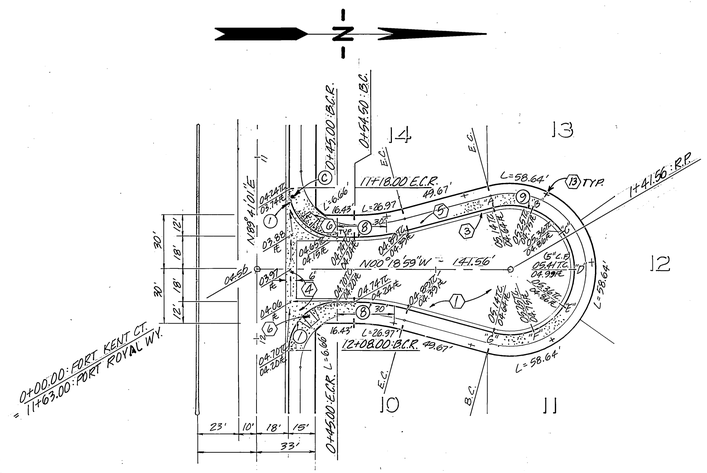

SEE SHEET 1 FOR GENERAL AND CONSTRUCTION NOTES.

GOLDBORO LANE

FORT KENT COURT

REGISTERED PROFESSIONAL ENGINEER — JOHN W. CANTY — No. 17550 — CIVIL — STATE OF CALIFORNIA

PRIVATE ENGINEERING NOTE

CONSTRUCTION CONTRACTOR AGREES THAT IN ACCORDANCE WITH GENERALLY ACCEPTED CONSTRUCTION PRACTICES, CONSTRUCTION CONTRACTOR WILL BE REQUIRED TO ASSUME SOLE AND COMPLETE RESPONSIBILITY FOR JOB SITE CONDITIONS DURING THE COURSE OF CONSTRUCTION OF THE PROJECT, INCLUDING SAFETY OF ALL PERSONS AND PROPERTY; THAT THIS REQUIREMENT SHALL BE MADE TO APPLY CONTINUOUSLY AND NOT BE LIMITED TO NORMAL WORKING HOURS, AND CONSTRUCTION CONTRACTOR FURTHER AGREES TO DEFEND, INDEMNIFY AND HOLD DESIGN PROFESSIONAL HARMLESS FROM ANY AND ALL LIABILITY, REAL OR ALLEGED, IN CONNECTION WITH THE PERFORMANCE OF WORK ON THIS PROJECT, EXCEPTING LIABILITY ARISING FROM THE SOLE NEGLIGENCE OF DESIGN PROFESSIONAL.

INDEXED 4H 6/30/87

BENCH MARK:
CITY OF RIVERSIDE BENCHMARK #FB-E P.K. NAIL & CITY TAG IN TOP OF LARGE ROCK 70'S'LY SIDE ALESSANDRO BLVD. & 0.60 MILE S'ELY OF VIA VISTA DR. NEAR P.P. NO. 7 75963 H.
ELEV. = 1502.193

J. F. DAVIDSON ASSOCIATES
CIVIL ENGINEERS — SURVEYORS — PLANNERS
3426 TENTH STREET, RIVERSIDE, CAL. — 11200 S. MT. VERNON AVE., COLTON, CAL.
APPROVED BY: DATE: 7/28/87 — REGISTERED CIVIL NO. 17550 EXP. DATE 6/30/89
DATE MAY 1986

MARK | REVISIONS | APPR. | DATE
DESIGNED BY CJS DRAWN BY CMF CHECKED BY JWC

CITY OF RIVERSIDE, CALIFORNIA
DEPARTMENT OF PUBLIC WORKS

APPROVED BY	BY	DATE
PRINCIPAL ENGINEER	MC	6-21-87
PARK DEPARTMENT	GB	7-17-87
TRAFFIC DIVISION	JRP	5-21-87
CHIEF P. W. ENGR.	[illegible]	6-4-87

APPROVED BY: DIRECTOR OF PUBLIC WORKS
DATE 6/4/87

STREET PLAN & PROFILE — PROJECT NO. R-2815
TRACT 21403-1
GOLDBORO LANE
FORT KENT COURT
SHEET 3 OF 6
HORIZ. SCALE: 1" = 40' VERT. SCALE: 1" = 4'
FILE NO. 86-9189 (M)

P.C. 2089

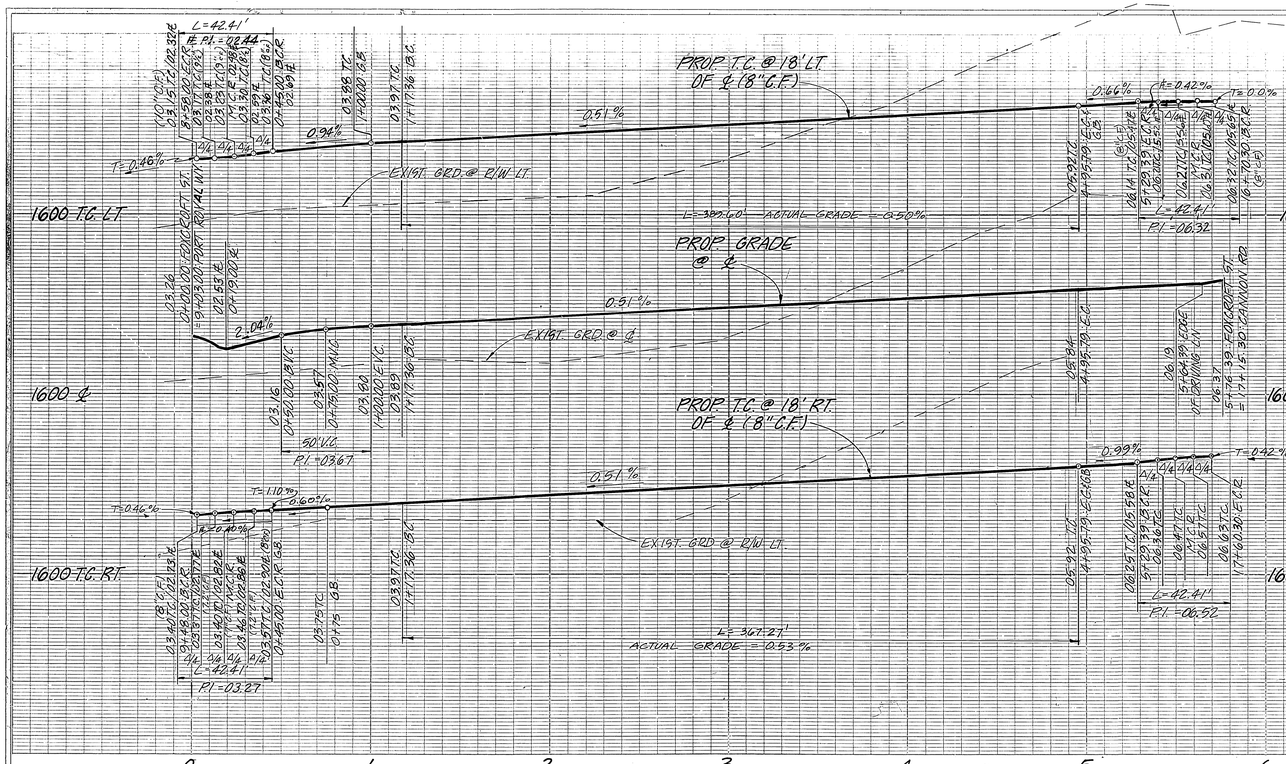

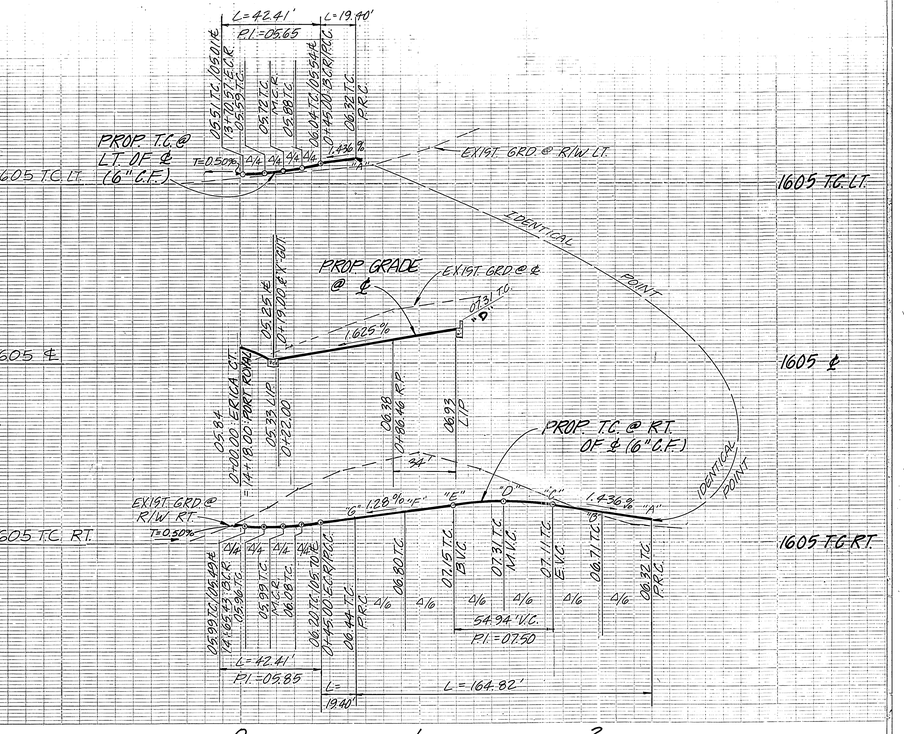

CURVE DATA				
NO	R	Δ	L	T
①	27.00'	90°00'00"	42.41'	27.00'
②	592.00'	35°32'43"	367.27'	189.76'
③	610.00'	35°32'43"	378.43'	195.53'
④	628.00'	35°32'43"	389.60'	201.30'
⑤	27.00'	4°09'31"	19.40'	10.14'
⑥	36.00'	262°19'02"	164.82'	———

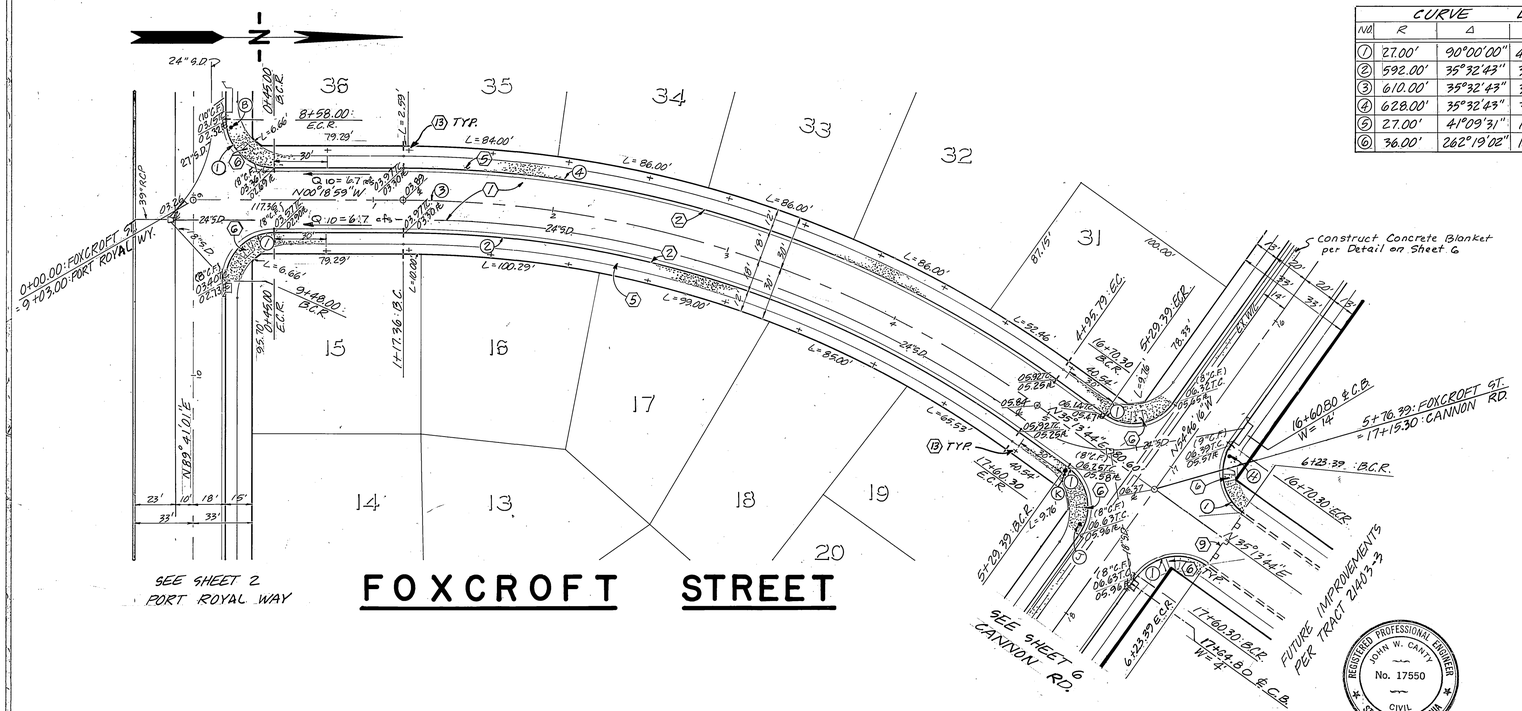

SEE SHEET 1 FOR GENERAL AND CONSTRUCTION NOTES.

PRIVATE ENGINEERING NOTE

CONSTRUCTION CONTRACTOR AGREES THAT IN ACCORDANCE WITH GENERALLY ACCEPTED CONSTRUCTION PRACTICES, CONSTRUCTION CONTRACTOR WILL BE REQUIRED TO ASSUME SOLE AND COMPLETE RESPONSIBILITY FOR JOB SITE CONDITIONS DURING THE COURSE OF CONSTRUCTION OF THE PROJECT, INCLUDING SAFETY OF ALL PERSONS AND PROPERTY; THAT THIS REQUIREMENT SHALL BE MADE TO APPLY CONTINUOUSLY AND NOT BE LIMITED TO NORMAL WORKING HOURS, AND CONSTRUCTION CONTRACTOR FURTHER AGREES TO DEFEND, INDEMNIFY AND HOLD DESIGN PROFESSIONAL HARMLESS FROM ANY AND ALL LIABILITY, REAL OR ALLEGED, IN CONNECTION WITH THE PERFORMANCE OF WORK ON THIS PROJECT, EXCEPTING LIABILITY ARISING FROM THE SOLE NEGLIGENCE OF DESIGN PROFESSIONAL.

INDEXED ☑ 6/30/87

REGISTERED PROFESSIONAL ENGINEER — JOHN W. CANTY — No. 17550 — CIVIL — STATE OF CALIFORNIA

BENCH MARK:
CITY OF RIVERSIDE BENCHMARK #FB-E P.K. NAIL & CITY TAG IN TOP OF LARGE ROCK 70'S'LY SIDE ALESSANDRO BLVD. & 0.60 MILE S'ELY OF VIA VISTA DR. NEAR P.P. NO. 775963 H.
ELEV. = 1502.195

CITY OF RIVERSIDE / WATER SYSTEM
David V. Garcia 3-3-87
Approved By: Date

J. F. DAVIDSON ASSOCIATES
CIVIL ENGINEERS ○ SURVEYORS ○ PLANNERS
3426 TENTH STREET, RIVERSIDE, CAL. — 11200 S. MT. VERNON AVE., COLTON, CAL.
APPROVED BY: DATE: 7/28/86
REGISTERED CIVIL ENGR. # 17750. EXP. DATE 6/30/89
DATE MAY 1986

CITY OF RIVERSIDE, CALIFORNIA
DEPARTMENT OF PUBLIC WORKS

	BY	DATE
APPROVED BY		
PRINCIPAL ENGINEER	JWC	5-21-87
PARK DEPARTMENT	SB	5-13-87
TRAFFIC DIVISION	RFP	5-21-87
CHIEF P. W. ENGR.	WJE	6-4-87

APPROVED BY: Barry Beal
DIRECTOR OF PUBLIC WORKS
DATE 6/4/87

REVISIONS — MARK — APPR. — DATE
DESIGNED BY LRS DRAWN BY CMF CHECKED BY LRS

STREET PLAN & PROFILE
TRACT 21403-1
FOXCROFT STREET
ERICA COURT
HORIZ. SCALE: 1" = 40' VERT. SCALE: 1" = 4'

PROJECT NO. R-2815
SHEET 4 OF 6
FILE NO. 86-9189 (M.)

R.T. 2889

~~COLE ST.~~ MISSION GROVE PKWY. N

CURVE DATA				
NO.	R	Δ	L	T
1	35.00'	89°23'53"	54.61'	34.63'
2	2.00'	180°00'00"	6.28'	—
3	1000.00'	03°32'33"	61.83'	30.92'
4	1007.00'	03°32'33"	62.26'	31.14'
5	1032.00'	03°32'33"	63.81'	31.91'
6	997.00'	03°32'33"	61.64'	30.83'
7	993.00'	03°32'33"	61.39'	30.71'
8	968.00'	02°40'21"	45.15'	22.58'
9	35.00'	90°00'23"	54.98'	35.00'
10	35.00'	90°51'49"	55.51'	35.53'
11	35.00'	89°33'54"	54.71'	34.74'
12	35.00'	90°36'07"	55.35'	35.37'

NO.	R	Δ	L	T
13	2.00'	168°41'24"	5.89'	20.20'

Underground Service Alert

Call: TOLL FREE

1 - 800
422 - 4133

TWO WORKING DAYS BEFORE YOU DIG

TRAFFIC CONSTRUCTION NOTES

- (A) Paint W'ly Curb Red as shown.
- (B) Paint Nose of Median Reflective Yellow as shown.
- (C) Paint 4" White Lane Line as shown. (50 L.F.)
- (D) Paint 8" White Left Turn Lane Line & Arrows as shown.
- (E) PAINT 4" WHITE LANE LINE (SKIP).
- (F) PAINT 4" WHITE SOLID (EDGE LINE).
- (G) PAINT 12" WHITE SOLID (STOP BAR) & STOP LEGEND.
- (H) PAINT 4" YELLOW TWO-WAY LEFT TURN LANE.

REGISTERED PROFESSIONAL ENGINEER JOHN W. CANTY No. 17550 CIVIL STATE OF CALIFORNIA

CITY OF RIVERSIDE / WATER SYSTEM

David V. Garcia 3-16-87
Approved By: Date

SEE SHEET 1 FOR GENERAL AND CONSTRUCTION NOTES.

INDEXED LH 6/30/87

R.C. 2089

PRIVATE ENGINEERING NOTE

CONSTRUCTION CONTRACTOR AGREES THAT IN ACCORDANCE WITH GENERALLY ACCEPTED CONSTRUCTION PRACTICES, CONSTRUCTION CONTRACTOR WILL BE REQUIRED TO ASSUME SOLE AND COMPLETE RESPONSIBILITY FOR JOB SITE CONDITIONS DURING THE COURSE OF CONSTRUCTION OF THE PROJECT, INCLUDING SAFETY OF ALL PERSONS AND PROPERTY; THAT THIS REQUIREMENT SHALL BE MADE TO APPLY CONTINUOUSLY AND NOT BE LIMITED TO NORMAL WORKING HOURS, AND CONSTRUCTION CONTRACTOR FURTHER AGREES TO DEFEND, INDEMNIFY AND HOLD DESIGN PROFESSIONAL HARMLESS FROM ANY AND ALL LIABILITY, REAL OR ALLEGED, IN CONNECTION WITH THE PERFORMANCE OF WORK ON THIS PROJECT, EXCEPTING LIABILITY ARISING FROM THE SOLE NEGLIGENCE OF DESIGN PROFESSIONAL.

PREPARED UNDER THE DIRECTION OF: John W Canty
REGISTERED CIVIL ENGINEER NO. 17550
EXPIRATION DATE 6-30-89 DATE: 7/28/86
APPROVED BY:

J F DAVIDSON ASSOCIATES, INC.
CIVIL ENGINEERS • SURVEYORS • PLANNERS
P.O. BOX 493, RIVERSIDE, CA 92502, (714) 686-0844
11200 SO. MT. VERNON AVE., #D, COLTON, CA 92324, (714) 825-1082
73-080 EL PASEO, #103, PALM DESERT, CA 92260, (619) 346-5691
JFD ASSOCIATES

SCALE

DATE MAY 1986

BENCH MARK: CITY OF RIVERSIDE BENCHMARK #F8-E P.K. NAIL & CITY TAG IN TOP OF LARGE ROCK 70' S'LY SIDE ALESSANDRO BLVD. & 0.60 MILE S'ELY OF VIA VISTA DR. NEAR P.P. NO. 775963 H. ELEV. = 1502.195

MARK	REVISIONS	APPR.	DATE
1	REVISED COLE ST. TO MISSION GROVE PKWY. N. FRED		9/19/87

DESIGNED BY LRS DRAWN BY CMF CHECKED BY LRS

CITY OF RIVERSIDE, CALIFORNIA
DEPARTMENT OF PUBLIC WORKS

APPROVED BY	BY	DATE
PRINCIPAL ENGINEER		5-21-87
PARK DEPARTMENT		2-13-87
TRAFFIC DIVISION		5-21-87
CHIEF P. W. ENGR.		6-4-87

APPROVED BY Barry Beck DIRECTOR OF PUBLIC WORKS DATE 6/4/87

STREET PLAN & PROFILE
TRACT 21403-1
~~COLE ST.~~ MISSION GROVE PKWY. N
HORIZ. SCALE: 1" = 40' VERT. SCALE: 1" = 4'

PROJECT NO. R-2815
SHEET 5 OF 6
FILE NO. 86-9189 (M)

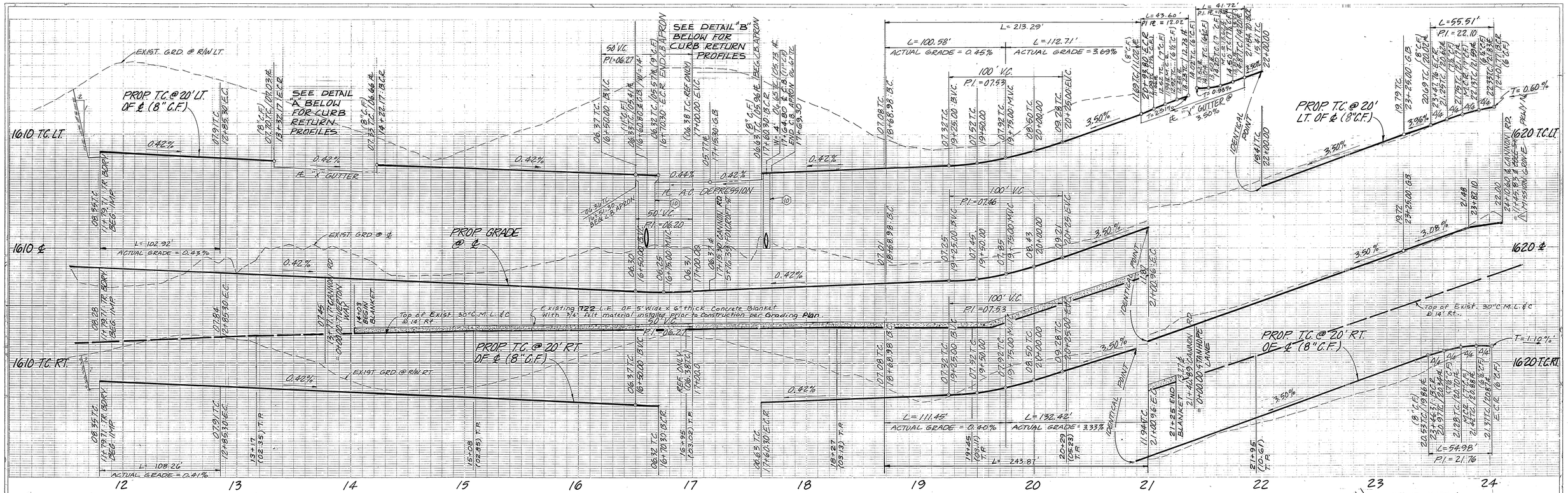

CURVE DATA				
№	R	Δ	L	T
1	770.00'	07°39'29"	102.92'	51.54'
2	790.00'	07°39'29"	105.59'	52.87'
3	810.00'	07°39'29"	108.26'	54.21'
4	370.00'	33°01'45"	213.29'	109.70'
5	390.00'	34°04'47"	231.97'	119.53'
6	410.00'	34°04'47"	243.87'	125.66'
7	35.00'	90°00'00"	54.93'	35.00'
8	27.00'	90°00'00"	42.41'	27.00'
9	27.00'	92°30'58"	43.60'	28.21'
10	27.00'	88°32'04"	41.72'	26.32'
11	35.00'	90°51'49"	55.51'	35.53'

SEE SHEET 1 FOR GENERAL AND CONSTRUCTION NOTES.

PRIVATE ENGINEERING NOTE

CONSTRUCTION CONTRACTOR AGREES THAT IN ACCORDANCE WITH GENERALLY ACCEPTED CONSTRUCTION PRACTICES, CONSTRUCTION CONTRACTOR WILL BE REQUIRED TO ASSUME SOLE AND COMPLETE RESPONSIBILITY FOR JOB SITE CONDITIONS DURING THE COURSE OF CONSTRUCTION OF THE PROJECT, INCLUDING SAFETY OF ALL PERSONS AND PROPERTY; THAT THIS REQUIREMENT SHALL BE MADE TO APPLY CONTINUOUSLY AND NOT BE LIMITED TO NORMAL WORKING HOURS, AND CONSTRUCTION CONTRACTOR FURTHER AGREES TO DEFEND, INDEMNIFY AND HOLD DESIGN PROFESSIONAL HARMLESS FROM ANY AND ALL LIABILITY, REAL OR ALLEGED, IN CONNECTION WITH THE PERFORMANCE OF WORK ON THIS PROJECT, EXCEPTING LIABILITY ARISING FROM THE SOLE NEGLIGENCE OF DESIGN PROFESSIONAL.

INDEXED LH 6/30/87

BENCH MARK:
CITY OF RIVERSIDE BENCHMARK #F8-E P.K. NAIL & CITY TAG IN TOP OF LARGE ROCK 70' S'LY SIDE ALESSANDRO BLVD. & 0.60' MILE S'ELY OF VIA VISTA DR. NEAR P.P. NO. 775963 H. ELEV. = 1502.195

REGISTERED PROFESSIONAL ENGINEER JOHN W. CANTY No. 17550 STATE OF CALIFORNIA

CITY OF RIVERSIDE / WATER SYSTEM
David V. Garcia 5-16-87
Approved By: Date

J. F. DAVIDSON ASSOCIATES
CIVIL ENGINEERS ○ SURVEYORS ○ PLANNERS
3426 TENTH STREET RIVERSIDE, CAL. 11200 S. MT. VERNON AVE. COLTON, CAL.
APPROVED BY: DATE: 7/26/86 John W. Canty
REGISTERED CIVIL NO. 17550 EXP. DATE 6/30/89
DATE MAY 1986

MARK	REVISIONS	APPR.	DATE
1	REVISED COLE ST TO MISSION GROVE PKWY N.	FRED	8/14/87

DESIGNED BY LRS DRAWN BY CMF CHECKED BY LRS

CITY OF RIVERSIDE, CALIFORNIA
DEPARTMENT OF PUBLIC WORKS

APPROVED BY	BY	DATE
PRINCIPAL ENGINEER	JWC	5-21-87
PARK DEPARTMENT	GB	3-13-87
TRAFFIC DIVISION	CPP	5-21-87
CHIEF P. W. ENGR.	WLC	6-4 4/87

APPROVED BY Barry Bed DIRECTOR OF PUBLIC WORKS
DATE 6/4/87

STREET PLAN & PROFILE
TRACT 21403-1
CANNON ROAD
HORIZ. SCALE: 1" = 40' VERT. SCALE: 1" = 4'

PROJECT NO. R-2815
SHEET 6 OF 6
FILE NO. 86-9189 (M)

P.C. 2089