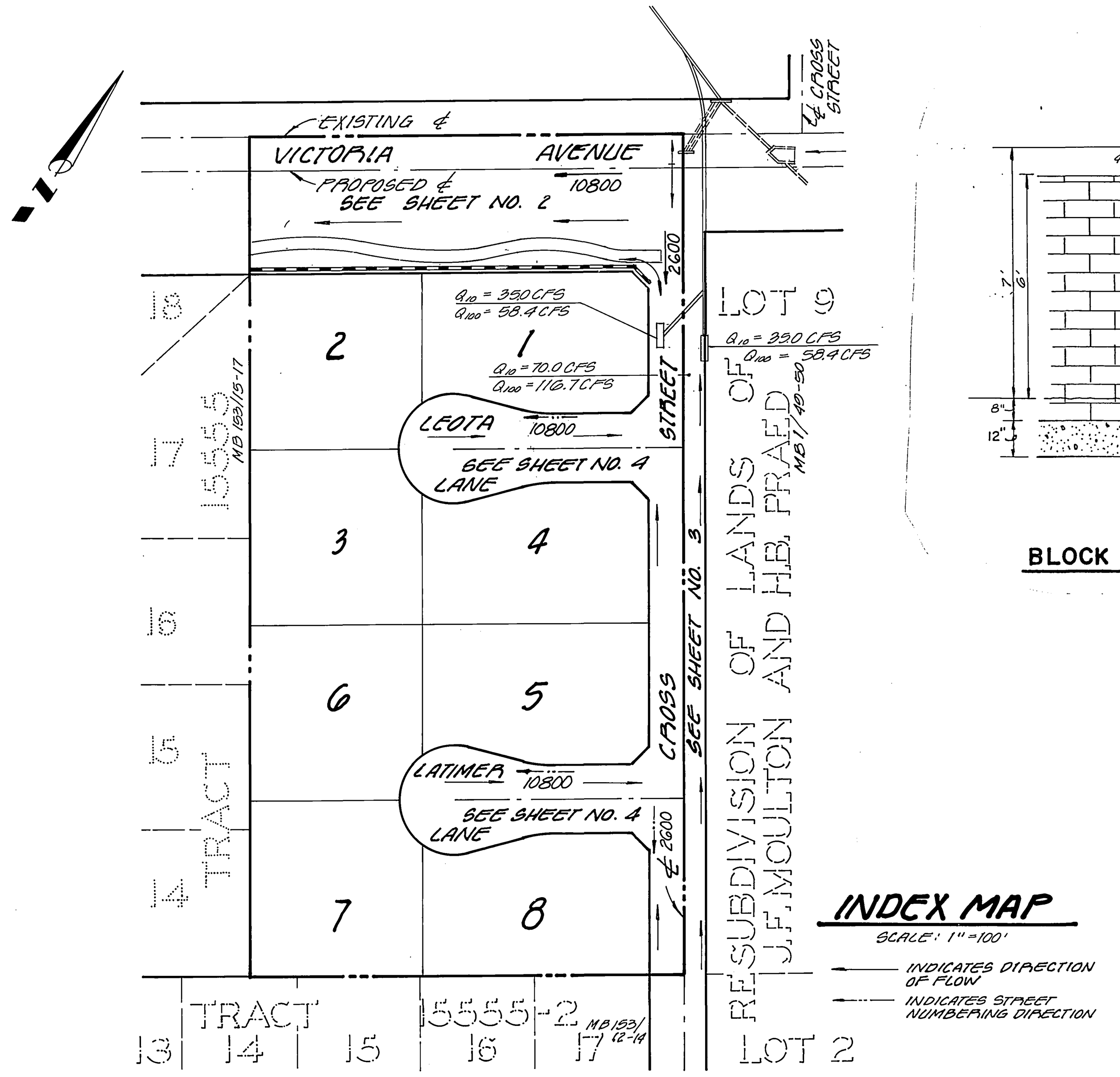

INDEX MAP

SCALE: 1" = 100'

— INDICATES DIRECTION OF FLOW

—·— INDICATES STREET NUMBERING DIRECTION

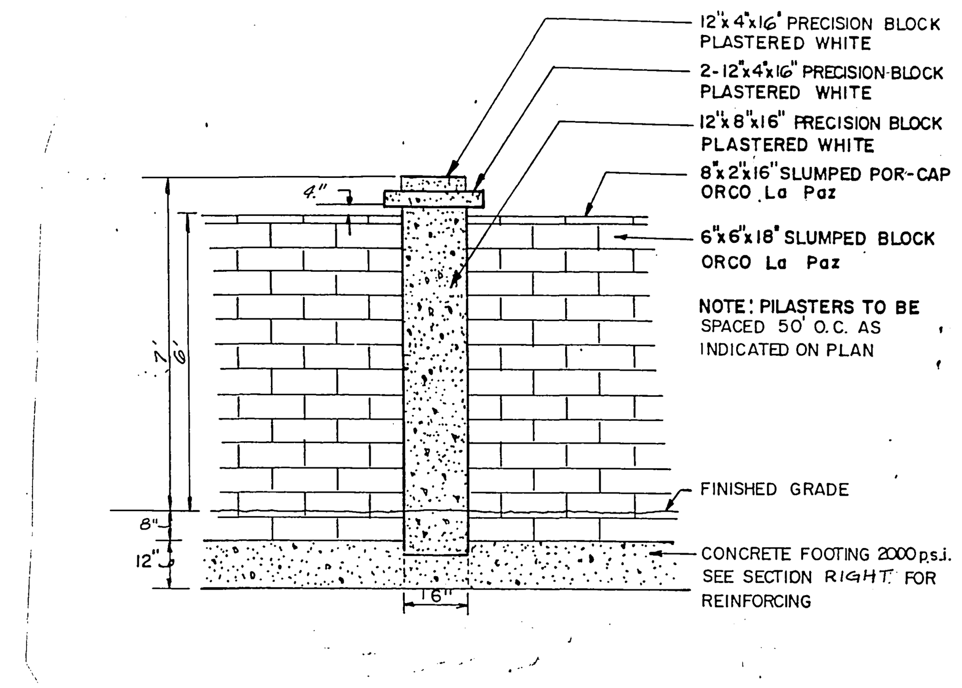

BLOCK WALL WITH PILASTERS

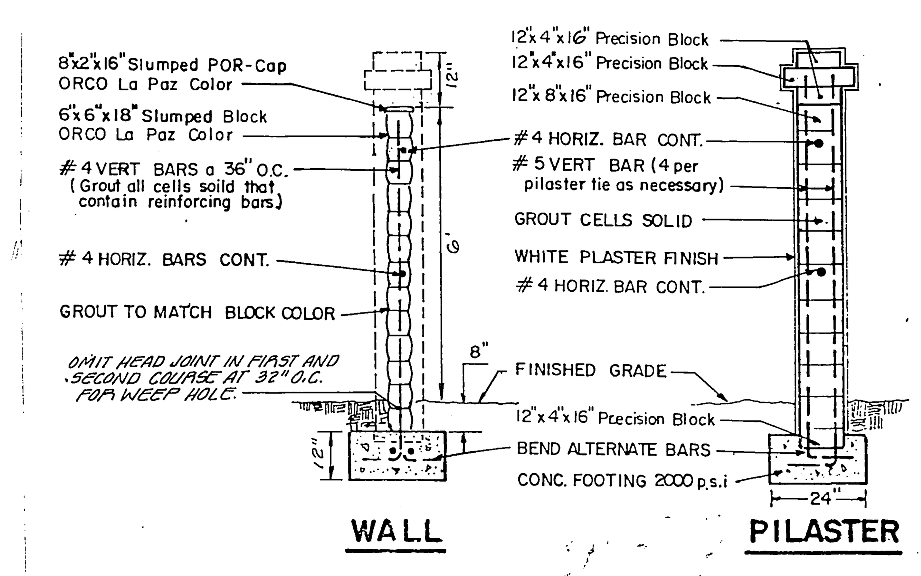

WALL & PILASTER DETAIL

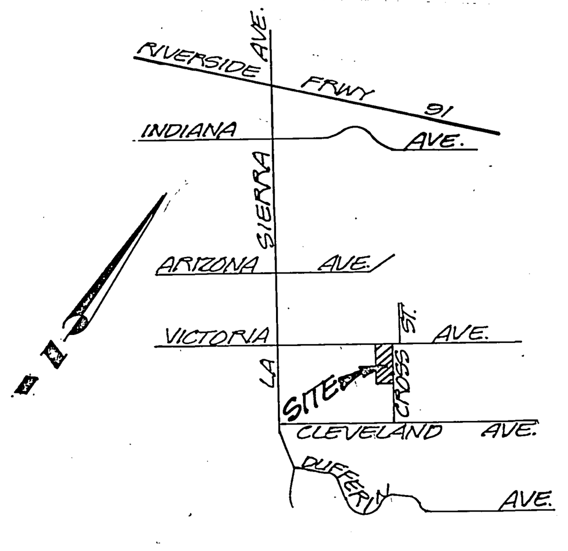

VICINITY MAP

NOT TO SCALE

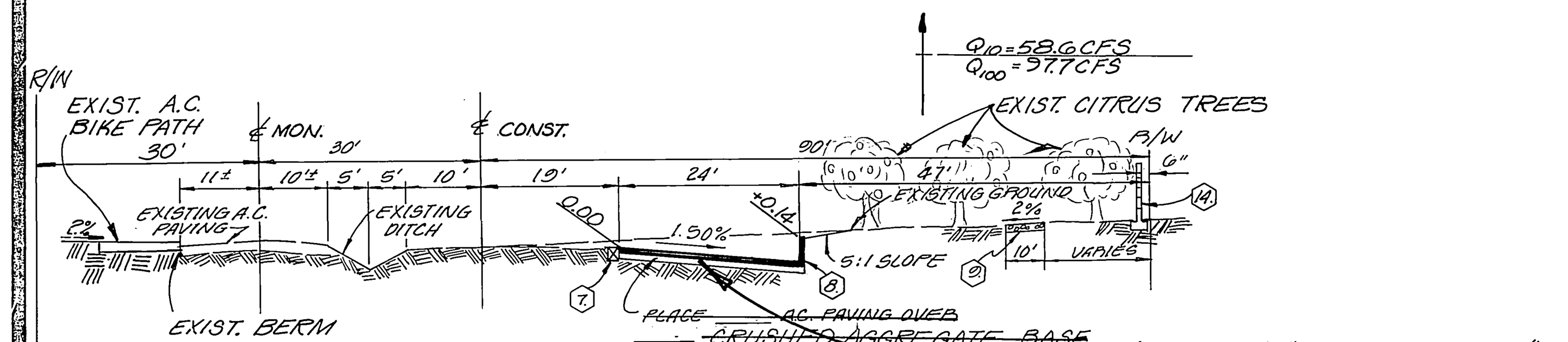

TYPICAL SECTION

NOT TO SCALE

VICTORIA AVENUE

T.I. = ~~X~~ 8.0 △1

△1 PLACE 5½" A C PAVING OVER 10" MIN. SOIL CEMENT BASE (11% CEMENT CONTENT) (R-VALUE = 25)
ALTERNATIVE SECTIONS
a.) PLACE 4" AC PAVING OVER 14½" AGGREGATE BASE (C.A.B.)
b.) PLACE 5" AC PAVING OVER 12" AGGREGATE BASE (C.A.B.)

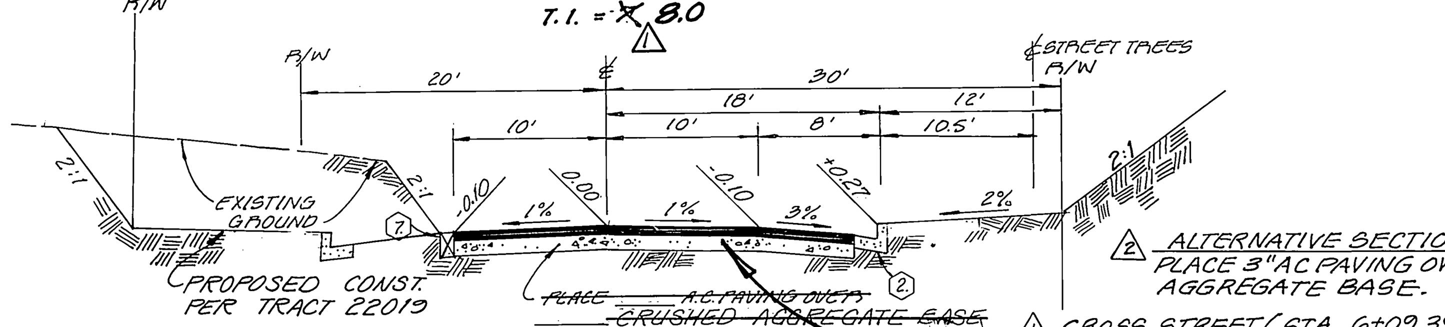

TYPICAL SECTION

NOT TO SCALE

CROSS STREET

T.I. = ~~X~~ 6.0 △1

△2 ALTERNATIVE SECTION
PLACE 3" AC PAVING OVER 6" CLASS II AGGREGATE BASE.

△1 CROSS STREET (STA. 6+09.39 SOUTHERLY)
PLACE 3" AC PAVING OVER 6" MIN. SOIL CEMENT BASE (11% CEMENT CONTENT) (R-VALUE = 44). AS AN ALTERNATIVE, THIS PAVEMENT CAN BE MATCHED WITH THE EXISTING WEST SIDE.
CROSS STREET (STA. 6+09.39 NORTHERLY)
PLACE 4" AC PAVING OVER 7" MIN. SOIL CEMENT BASE (11% CEMENT CONTENT) (R-VALUE = 23)
△2 ALTERNATIVE SECTION
PLACE 3" A C PAVING OVER 10" CLASS II AGGREGATE BASE.

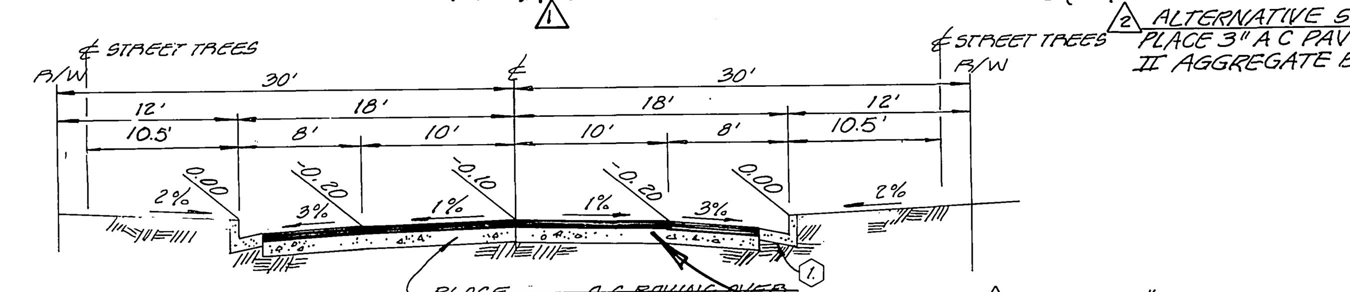

TYPICAL SECTION

NOT TO SCALE

LEOTA LANE & LATIMER LANE

T.I. = 5.0

△1 PLACE 3" AC PAVING OVER 6" MIN. SOIL CEMENT BASE (11% CEMENT CONTENT) (R-VALUE = 23)

△2 ALTERNATIVE SECTION
PLACE 3" AC PAVING OVER 6½" CLASS II AGGREGATE BASE.

CONSTRUCTION NOTES:

1. Construct curb and gutter per City of Riverside Std. Dwg. No. 200, Type I, 6" curb face.
2. Construct curb and gutter per City of Riverside Std. Dwg. No. 200, Type I, 8" curb face.
3. △3 WHEELCHAIR RAMP CURB DEPRESSION PROVIDED PER CITY STD. DWG. NO. 304.
5. Construct A.C. paving and base per typical section.
6. CONSTRUCT 10' WIDE CROSS-GUTTER PER CITY OF RIVERSIDE STD. DWG. NO. 220.
7. Install 2" x 4" redwood header.
8. Construct 6" A.C. Berm, Type I, per City of Riverside Std. Dwg. No. 250.
9. PLACE 4" DECOMPOSED GRANITE WITH 2" x 4" REDWOOD HEADER ON BOTH SIDES FOR EQUESTRIAN TRAIL.
10. INSTALL TYPE F-1 FLEXIBLE DELINEATORS 10' O.C.
12. ⊗ Plant Street Trees per City of Riverside, Parks and Recreation Department standards.
14. CONSTRUCT CONCRETE BLOCK WALL PER CITY STD. #704 (SEE PLAN FOR HEIGHT). TYPE/COLOR OF BLOCK: ORCO "LA PAZ" SLUMPSTONE (OR EQUAL) SIZE: 6"x6"x18" MORTAR COLOR: TO MATCH, TYPE/COLOR CAP: 8"x2"x16" ORCO "LA PAZ" SLUMPSTONE (OR EQUAL) OTHER: STUCCO PILASTER SEE DWG. ABOVE.
15. PILASTERS PER DETAIL HEREON AND MATERIALS PER NOTE 14.

STREET NAME SIGN SCHEDULE

A.	VICTORIA AVENUE	10800
	CROSS STREET	2600
B.	CROSS STREET	2600
	LEOTA LANE	10800
C.	CROSS STREET	2600
	LATIMER LANE	10800
D.	R.I. (STOP SIGN)	

NOTE:
INSTALL SIGNS PER CITY OF RIVERSIDE STD. DWGS. NO. 662A & 666.

UNDERGROUND UTILITY NOTES

1. Locations of substructures as shown on plans are shown from the best available information, however, such locations as shown or failure to show existing substructures shall not relieve the contractors from the responsibility of verifying the location of and protecting all substructures.
2. It shall be the responsibility of the contractor to contact and make necessary arrangements with the appropriate utility companies prior to the beginning of construction.

PRIVATE ENGINEERING NOTE

CONSTRUCTION CONTRACTOR AGREES THAT IN ACCORDANCE WITH GENERALLY ACCEPTED CONSTRUCTION PRACTICES, CONSTRUCTION CONTRACTOR WILL BE REQUIRED TO ASSUME SOLE AND COMPLETE RESPONSIBILITY FOR JOB SITE CONDITIONS DURING THE COURSE OF CONSTRUCTION OF THE PROJECT, INCLUDING SAFETY OF ALL PERSONS AND PROPERTY; THAT THIS REQUIREMENT SHALL BE MADE TO APPLY CONTINUOUSLY AND NOT BE LIMITED TO NORMAL WORKING HOURS, AND CONSTRUCTION CONTRACTOR FURTHER AGREES TO DEFEND, INDEMNIFY AND HOLD DESIGN PROFESSIONAL HARMLESS FROM ANY AND ALL LIABILITY, REAL OR ALLEGED, IN CONNECTION WITH THE PERFORMANCE OF WORK ON THIS PROJECT, EXCEPTING LIABILITY ARISING FROM THE SOLE NEGLIGENCE OF DESIGN PROFESSIONAL.

GENERAL NOTES

1. It shall be the responsibility of the contractor to clear the right of way in accordance with the provisions of law as it affects each utility including irrigation lines and appurtenances and at no cost to the City.
2. Construction shall be in accordance with the City of Riverside Department of Public Works, Standard Drawings, Standard Drawing No. 10 and the Standard Specifications for Public Works Construction, current edition.
3. Trim edge of existing pavement where new pavement joins to a smooth, straight line. Construct match-up paving as shown on plan and overlay paving as directed in the field to produce a smooth section.
4. Construct driveway approaches per Std. Dwg. 302. Exact size and location to be determined at the time of construction as approved by the Traffic Engineer.
5. Developer and/or contractor to give RCFC 5 days' written notice prior to starting work on storm drain (or doing any work within RCFC easements). RCFC Encroachment Permit No. ________.
6. All traffic signs shall be installed prior to opening the streets to traffic.
7. Any traffic control striping obliterated and/or badly worn during construction shall be restored by the contractor within five days after notification from the City Inspectors.
8. Final striping for traffic control and/or pavement marking to be the responsibility of the developer.
9. The subdivider shall arrange for a soil test to be made by a soils engineer after the streets have been prepared to rough grade. Depth of base material and A.C. paving shall be determined by the City of Riverside design standards and test procedures.
10. All flagged elevations shall be staked in the field by the private engineer.
11. The sewer contractor shall adjust manholes to final grade after paving is completed.
12. All overhanging tree limbs that are less than 14' above the street grade shall be trimmed back.
13. The developer shall be responsible for preserving or re-establishing and referencing survey monuments destroyed, disturbed or buried as a result of construction shown here.
14. The private engineer signing these plans is responsible for assuring the accuracy and acceptability of the work hereon. In the event of discrepancies arising during construction, the private engineer shall be responsible for determining an acceptable solution and revising the plans for approval by the City.
15. The contractor shall call in a location request to Underground Service Alert (USA), Phone No. 1-800-422-4133, two working days before digging. No construction permit will be issued by the Public Works Department involving excavation for underground facilities unless the applicant has been provided an inquiry identification number by USA.
16. For all special walls, i.e. "back-up walls", flooding protection walls, walls within City right of way, etc. the following note will be required: Construct block wall per Riverside City Standard 704 or approved designs (See plan for height(s)). Type/Color of Block: Orco "La Paz" Slumpstone Mortar Color: to match Other: Stucco Pilaster Size: 6" x 6" x 18" Type/Color Cap: 8" x 2" x 16" Orco "La Paz" Slumpstone.
17. See City of Riverside Electrical Department Drawing for disposition of existing power poles, conduits and street lights.
18. Developer to give City Water Division five (5) working days written notice prior to start of construction and to allow City ten (10) working days for completion of work (351-6150).

TREE PLANTING NOTES

1. All related work shall conform to the City of Riverside, Park and Recreation Department standards.
2. Contact the Park Projects Inspector a minimum of 48 hours in advance at 787-7223 to schedule inspections. Inspections shall be required: a) when plant locations have been spotted in the field prior to digging plant pits, b) while digging plant pits and planting/relocating trees, c) after planting and all other indicated or specified work has been completed for start of maintenance, and d) at end of maintenance/final acceptance (contractor/developer will be released from maintenance only upon receipt of written notification from the city that the Parks & Recreation Department is assuming maintenance responsibilities).
3. The Contractor/Developer shall maintain all plantings for a minimum period of one (1) year.
4. Street tree planting shall be as follows:

	STREET NAMES	BOTANICAL NAME / COMMON NAME	MIN. SIZE	APPROX. SPACING	NO. REQ.
	CROSS STREET	LAGERSTROMIA INDICA / CRAPE MYRTLE	15 GAL.	45'	9
	LEOTA LANE	PRUNUS CERASIFERA / RED LEAF PLUM	15 GAL.	45'	10
	LATIMER LANE	PRUNUS CERASIFERA / RED LEAF PLUM	15 GAL.	45'	10

VICTORIA AVENUE - SEE REVERSE FRONTAGE LANDSCAPING PLAN #1979 PREPARED BY RANDOLPH HLUBIK ASSOCIATES - (714) 781-1930

5. A Public Works Department permit is required prior to commencement of tree relocation and/or removal work. For all trees within the ultimate pavement area, backfill of all holes is to be inspected by the city for proper compaction.

EXP. 3-31-89 STATE OF CALIFORNIA

PREPARED UNDER THE DIRECTION OF:
ROBERT S. KIPPER (signature)
REGISTERED CIVIL ENGINEER NO. 13690
EXPIRATION DATE 3-31-89 DATE: 2-16-87

J F DAVIDSON ASSOCIATES, INC.
CIVIL ENGINEERS ○ SURVEYORS ○ PLANNERS
P.O. BOX 493, RIVERSIDE, CA 92502, (714) 686-0844
11200 SO. MT. VERNON AVE., #D, COLTON, CA 92324, (714) 825-1082
73-080 EL PASEO, #103, PALM DESERT, CA 92260, (619) 346-5691
JFD ASSOCIATES

SCALE: AS NOTED
DATE: DEC., 1986
BENCH MARK: ELEV. = 783.41
FD. BRASS DISC. IN CONCRETE STAMPED M.L., 83, 1971, RIVERSIDE COUNTY SURVEYOR. 144' N'LY OF ARIZONA AVE. AND 36' E'LY OF LA SIERRA AVE.

MARK	REVISIONS	APPR.	DATE
△3	ASBUILT	WW	7/6/92
△2	ADDED PAVEMENT SECTIONS PER SR 1436	WW	11/29/90
△1	ADDED PAVEMENT SECTIONS PER SR 1434 ~~REVISED T.I. VALUES~~	WW	11/13/90

DESIGNED BY RLS DRAWN BY CR CHECKED BY RLS

CITY OF RIVERSIDE, CALIFORNIA
DEPARTMENT OF PUBLIC WORKS

APPROVED BY	BY	DATE
PRINCIPAL ENGINEER		10-21-87
PARK DEPARTMENT		10/13/87
TRAFFIC DIVISION		10-20-87
CHIEF P. W. ENGR.		11.13
PLANNING		6/25/87

APPROVED BY (signature) DIRECTOR OF PUBLIC WORKS
DATE 11/18/87

TRACT NO. 21979
TITLE SHEET
STREET IMPROVEMENT & STORM DRAIN PLAN
FOR: KEUSDER ENTERPRISES

PROJECT NO. R-2885
SHEET 1 OF 5
FILE NO. 86-9462 (M)

RC-2143

NOTE:
LOCATION AND DEPTH OF EXISTING UTILITIES TO BE VERIFIED FROM TO CONSTRUCTION.

EXISTING GRADE @ MONUMENTED ℄

830 ℄

820 ℄

830 19'P.T.

820 19'P.T.

830 43'P.T.

820 43'P.T.

EXISTING GROUND @ 19'P.T. OF PROPOSED ℄

PROPOSED EDGE OF A.C. PAVEMENT @ 19'P.T. OF CONST. ℄

EXISTING GROUND @ 43'P.T. OF PROPOSED ℄

PROPOSED TOP OF BERM @ 43'P.T. OF CONST. ℄ 6" B.F.

EXISTING GRADE OVER STORM DRAIN

PROPOSED GRADE OVER STORM DRAIN

EXIST. GROUND @ PROPOSED ℄

℄ PROPOSED CHANNEL

CUT-OFF WALL

HYDRAULIC DATA:
Q100 = 1167 CFS
V100 = 9.28 FPS

HYDRAULIC DATA:
Q100 = 582.3 CFS
V100 = 4.64 FPS

186.91 L.F. - 48" RCP 1600.0

28.47 L.F. 48" RCP 1900.0

10 11 12

PROFILE - LINE "A" STORM DRAIN

SCALE: HOR. 1"=40', VER. 1"=4'

PLAN VIEW - SEE SHEET NO. 5

5 6 7 8 9

FOR STORM DRAIN AND CHANNEL DETAILS. SEE SHEET S 5

EXISTING FIRE HYDRANT PROJECT IN PLACE

EXISTING A.C. BERM

EXISTING PLUME (30'DIAM × 15'HIGH)

EXISTING DOUBLE PLUME (30'DIAM × 15'HIGH)

EXISTING SEWER M.H.

℄ CROSS STREET

APPROXIMATE LOCATION EXISTING IMPIGATION LINE

EXISTING 3" GAS MAIN

EXIST. 8" OUTFALL SUBDRAIN ALVORD DRAINAGE DISTRICT

PROPOSED STORM DRAIN PER TR 21019 (CITY PLAN D-519).

PROPOSED IMPROVEMENTS PER TR 21019. (CITY PLAN R-2891)

PROPOSED 8" SEWER PER CITY PLAN S-1398

℄ VICTORIA AVENUE N 58°35'00"E (MON.) 378.03'

EXIST. DIRT PATH PER CITY PLAN P-2085

PROPOSED DITCH

PROPOSED IMPROVEMENTS PER TRACT 19555 CITY PLAN P-2855

EXISTING WOOD STRUCTURE TO BE REMOVED

REMOVE EXISTING HEADWALL, A.C. SWALE & INLET STRUCTURE

WHERE STREET LIGHT REMOVED OR RE-LOCATED AS DETERMINED BY DEVELOPER

8+99.71 VICTORIA AVENUE
℄ 30.00 CROSS STREET

STOP

"LINE "A" SEE PROFILE ABOVE

CURVE DATA
① R = 19.00'
Δ = 180°00'00"
L = 59.69'

TRACT 19555
M.M. 208/16-17

SUBDIVISION OF LOT 9 OF J.F. MOULTON AND H.B. PRAED M.B. 1/48-50

LOT 9

VICTORIA AVENUE

SEE SHEET NO. 3 CROSS STREET

GRAPHIC SCALE
0 20 40 80 120 160 FT.

IRRIGATION LINE NOTES

The installation and relocation of irrigation lines and facilities by the developer shall be done under the direction and supervision of John M. Hocking, Manager of the Gage Canal Company or his representative. The Gage Canal Company shall approve all construction material used and shall not be liable for and/or incur any cost or expense for materials or installation.

1. Install 8" P.V.C. irrigation line.
2. Install 8" steel irrigation line across street improvements.
3. Existing irrigation standpipe to be relocated.
4. Existing irrigation line to remain in operation and be protected in place until installation of new facilities are complete, then line is to be abandoned.
5. Existing irrigation line protect in place.

NOTE:
SEE SHEET NO. 1 FOR GENERAL NOTES, CONSTRUCTION NOTES, AND TYPICAL SECTION.

LEGEND
EXISTING TREES TO BE REMOVED
EXISTING TREES TO REMAIN

PRIVATE ENGINEERING NOTE

CONSTRUCTION CONTRACTOR AGREES THAT IN ACCORDANCE WITH GENERALLY ACCEPTED CONSTRUCTION PRACTICES, CONSTRUCTION CONTRACTOR WILL BE REQUIRED TO ASSUME SOLE AND COMPLETE RESPONSIBILITY FOR JOB SITE CONDITIONS DURING THE COURSE OF CONSTRUCTION OF THE PROJECT, INCLUDING SAFETY OF ALL PERSONS AND PROPERTY; THAT THIS REQUIREMENT SHALL BE MADE TO APPLY CONTINUOUSLY AND NOT BE LIMITED TO NORMAL WORKING HOURS, AND CONSTRUCTION CONTRACTOR FURTHER AGREES TO DEFEND, INDEMNIFY AND HOLD DESIGN PROFESSIONAL HARMLESS FROM ANY AND ALL LIABILITY, REAL OR ALLEGED, IN CONNECTION WITH THE PERFORMANCE OF WORK ON THIS PROJECT, EXCEPTING LIABILITY ARISING FROM THE SOLE NEGLIGENCE OF DESIGN PROFESSIONAL.

REGISTERED CIVIL ENGINEER No. 6552 EXP. 3-31-89 CIVIL

CITY OF RIVERSIDE WATER DEPARTMENT
Carl Wenzaitner 9/9/87
APPROVED DATE

GAGE CANAL CO.
John M. Hocking 7-24-1987
APPROVED JOHN M. HOCKING DATE

SOUTHERN CALIFORNIA GAS CO.
E. L. Parker 6-17-87
APPROVED DATE

PREPARED UNDER THE DIRECTION OF: ROBERT S. NIPPER
REGISTERED CIVIL ENGINEER No. 11666
EXPIRATION DATE 3-31-89 DATE: 8-24-87

J.F. DAVIDSON ASSOCIATES, INC.
CIVIL ENGINEERS ○ SURVEYORS ○ PLANNERS
■ 3426 TENTH STREET RIVERSIDE, CAL.
□ 11200 S. MT VERNON AVE. COLTON, CAL.

SCALE: HORIZ.: 1"=40' VERT.: 1"=4'

DATE DEC. 1986

BENCH MARK: F.D. BRASS DISC. IN CONCRETE STAMPED M.L. 63, 1971, RIVERSIDE COUNTY SURVEYOR, 104' N'LY OF ARIZONA AVE. AND 30' E'LY OF LA SIERRA AVE. ELEV. = 703.41

AS BUILT

MARK	REVISIONS	APPR.	DATE

DESIGNED BY DLS DRAWN BY MP/CA CHECKED BY DLS R.H.

CITY OF RIVERSIDE, CALIFORNIA
DEPARTMENT OF PUBLIC WORKS

	BY	DATE
APPROVED BY PRINCIPAL ENGINEER	[illegible]	10-21-87
PARK DEPARTMENT	[illegible]	10/6/87
TRAFFIC DIVISION	[illegible]	10-20-87
CHIEF P. W. ENGR.	[illegible]	11-13-87
PLANNING	[illegible]	10/15/87

APPROVED BY [illegible]
DIRECTOR OF PUBLIC WORKS
DATE 11/18/87

TRACT NO. 21979
STREET IMPROVEMENT PLAN & PROFILE VICTORIA AVENUE

FOR: NEUSDEN ENTERPRISES

PROJECT NO. R-2885

SHEET 2 OF 5

FILE NO. 80-9402 (M)

RC-2145

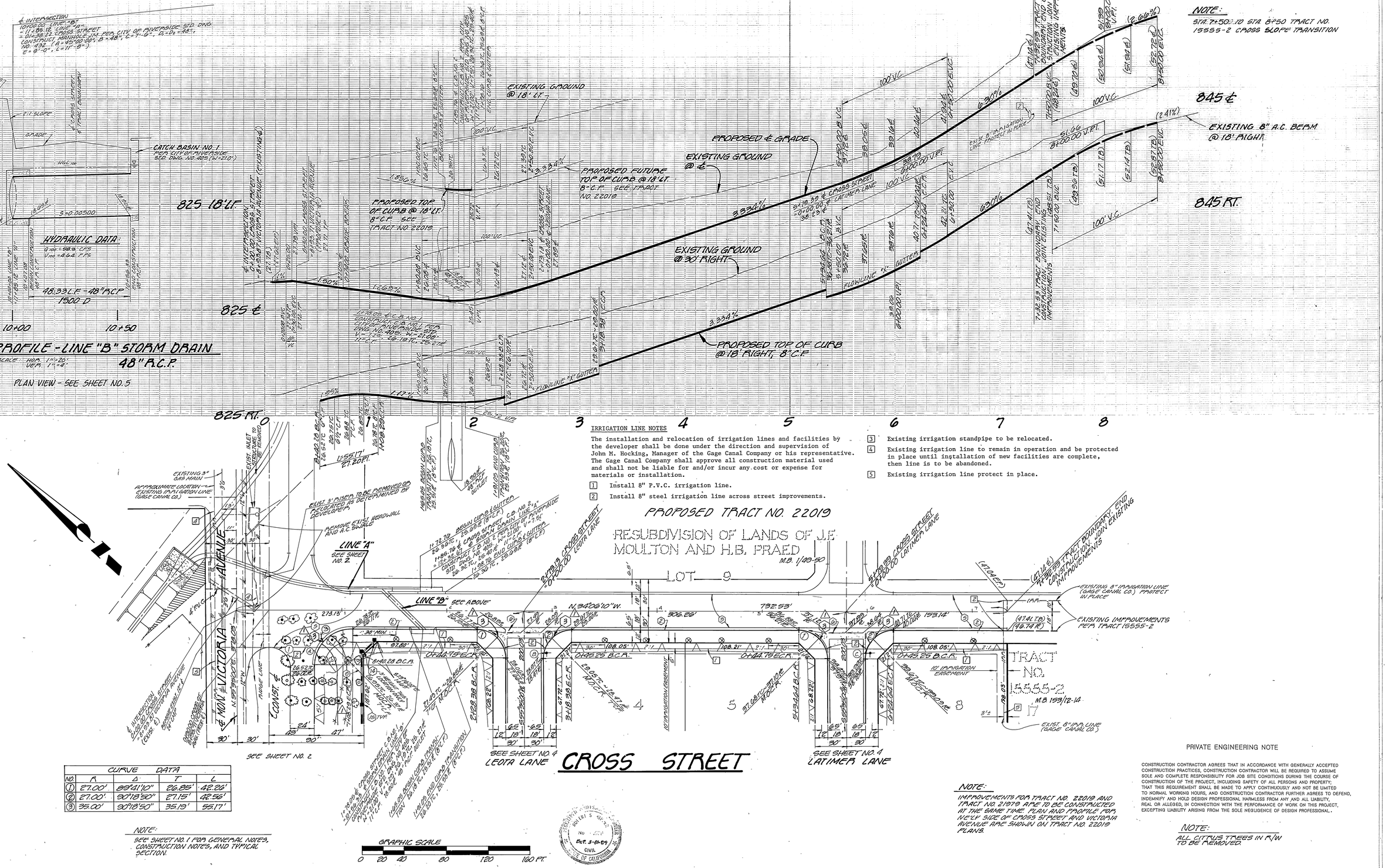

CURVE DATA				
NO.	R	Δ	T	L
①	27.00'	89°41'10"	26.85'	42.26'
②	27.00'	90°18'50"	27.15'	42.56'
③	35.00'	90°18'50"	35.19'	55.17'

NOTE:
SEE SHEET NO. 1 FOR GENERAL NOTES, CONSTRUCTION NOTES, AND TYPICAL SECTION.

IRRIGATION LINE NOTES

The installation and relocation of irrigation lines and facilities by the developer shall be done under the direction and supervision of John M. Hocking, Manager of the Gage Canal Company or his representative. The Gage Canal Company shall approve all construction material used and shall not be liable for and/or incur any cost or expense for materials or installation.

1. Install 8" P.V.C. irrigation line.
2. Install 8" steel irrigation line across street improvements.
3. Existing irrigation standpipe to be relocated.
4. Existing irrigation line to remain in operation and be protected in place until installation of new facilities are complete, then line is to be abandoned.
5. Existing irrigation line protect in place.

PRIVATE ENGINEERING NOTE

CONSTRUCTION CONTRACTOR AGREES THAT IN ACCORDANCE WITH GENERALLY ACCEPTED CONSTRUCTION PRACTICES, CONSTRUCTION CONTRACTOR WILL BE REQUIRED TO ASSUME SOLE AND COMPLETE RESPONSIBILITY FOR JOB SITE CONDITIONS DURING THE COURSE OF CONSTRUCTION OF THE PROJECT, INCLUDING SAFETY OF ALL PERSONS AND PROPERTY; THAT THIS REQUIREMENT SHALL BE MADE TO APPLY CONTINUOUSLY AND NOT BE LIMITED TO NORMAL WORKING HOURS, AND CONSTRUCTION CONTRACTOR FURTHER AGREES TO DEFEND, INDEMNIFY AND HOLD DESIGN PROFESSIONAL HARMLESS FROM ANY AND ALL LIABILITY, REAL OR ALLEGED, IN CONNECTION WITH THE PERFORMANCE OF WORK ON THIS PROJECT, EXCEPTING LIABILITY ARISING FROM THE SOLE NEGLIGENCE OF DESIGN PROFESSIONAL.

NOTE:
IMPROVEMENTS FOR TRACT NO. 22019 AND TRACT NO. 21979 ARE TO BE CONSTRUCTED AT THE SAME TIME. PLAN AND PROFILE FOR N.E'LY SIDE OF CROSS STREET AND VICTORIA AVENUE ARE SHOWN ON TRACT NO. 22019 PLANS.

NOTE:
ALL CITRUS TREES IN R/W TO BE REMOVED.

CITY OF RIVERSIDE WATER DEPARTMENT
Carl Weingartner 9/9/87
APPROVED DATE

GAGE CANAL CO.
John M. Hocking 7-24-1987
APPROVED JOHN M. HOCKING DATE

SOUTHERN CALIFORNIA GAS CO.
E. F. Parker 6-17-87
APPROVED DATE

PREPARED UNDER THE DIRECTION OF:
ROBERT S. RIPPEN Robert S. Rippen
REGISTERED CIVIL ENGINEER NO. 18699
EXPIRATION DATE 3-31-89 DATE: 2-26-87

J.F. DAVIDSON ASSOCIATES, INC.
CIVIL ENGINEERS ○ SURVEYORS ○ PLANNERS
3426 TENTH STREET, RIVERSIDE, CAL. 11200 S. MT. VERNON AVE., COLTON, CAL.

SCALE: HORIZ. 1"=40' VERT. 1"=4'
DATE DEC. 1986

BENCH MARK: FD BRASS DISC IN CONCRETE STAMPED M.L., 83, 1971, RIVERSIDE COUNTY SURVEY, 192.1' N'LY OF ARDEN AVE. AND 36' E'LY OF CA 81-ERRA AVE. ELEV. = 799.41

MARK	REVISIONS	APPR.	DATE
1	ADD LT	WJL	11/6/87

DESIGNED BY R.L.S. DRAWN BY M.B.C. CHECKED BY R.L.S.

CITY OF RIVERSIDE, CALIFORNIA
DEPARTMENT OF PUBLIC WORKS

APPROVED BY		DATE
PRINCIPAL ENGINEER		10-21-87
PARK DEPARTMENT		10/26/87
TRAFFIC DIVISION		10-27-87
CHIEF P. W. ENGR.		11/13
PLANNING	CMD 10/25/87 10/28 11/4/87	

APPROVED BY Barry Bell
DIRECTOR OF PUBLIC WORKS
DATE 11/18/87

TRACT NO. 21979
STREET IMPROVEMENT PLAN & PROFILE
CROSS STREET

FOR: KEUSDER ENTERPRISES

PROJECT NO. R-2885
SHEET 3 OF 5
FILE NO. 86-0462(M)

PC-2143

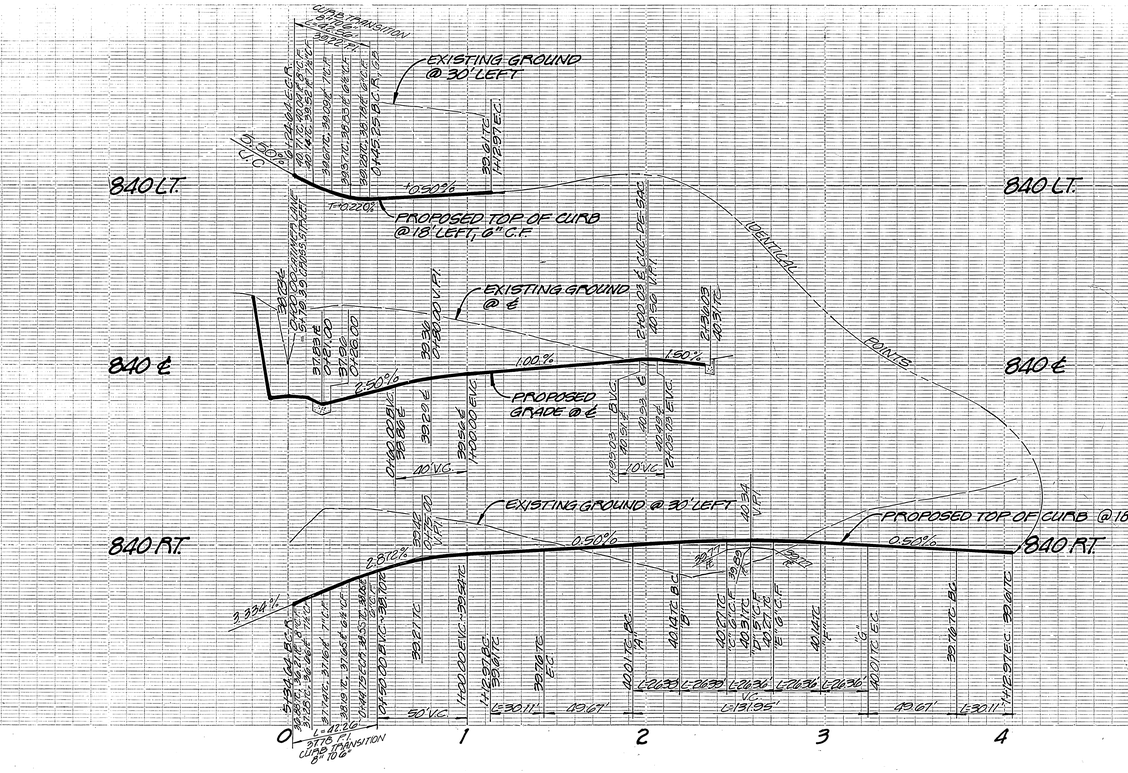

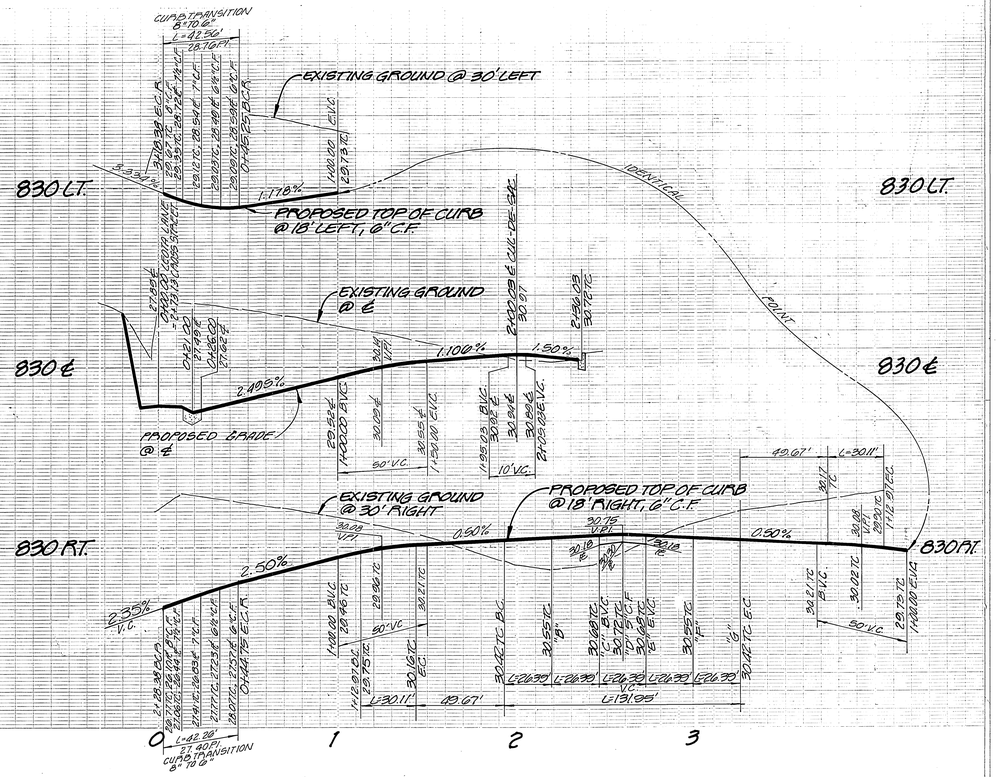

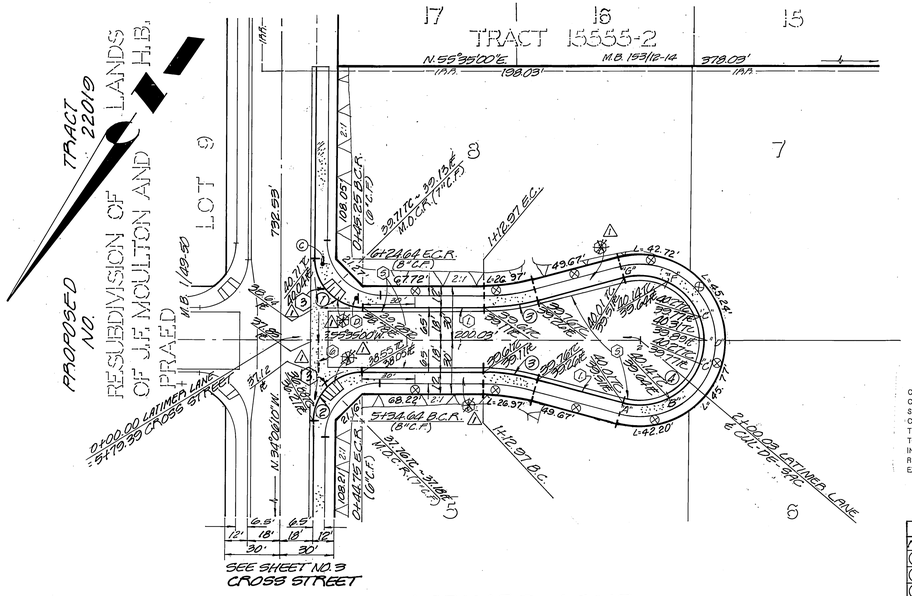

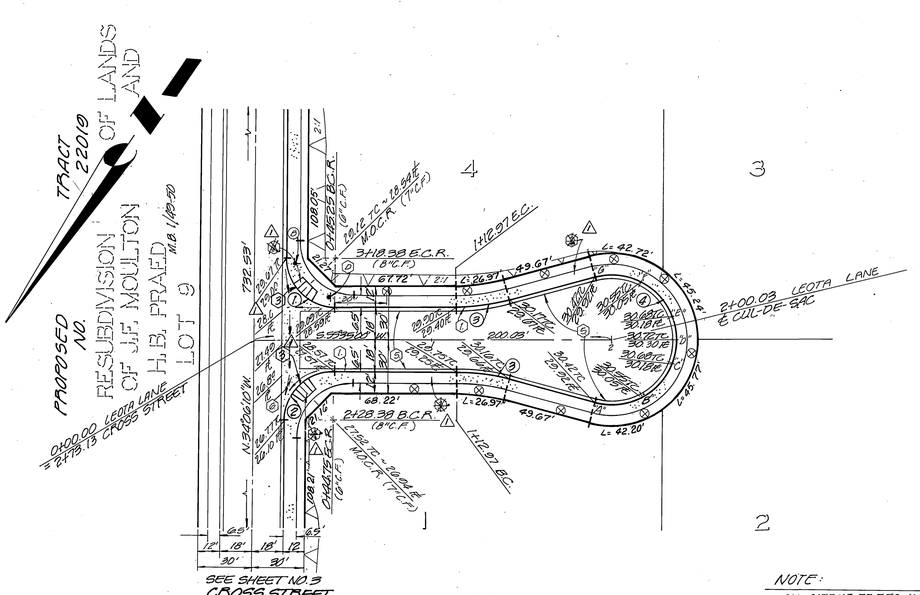

NOTE:
SEE SHEET NO. 1 FOR GENERAL NOTES, CONSTRUCTION NOTES, AND TYPICAL SECTION.

NOTE:
ALL CITRUS TREES IN R/W TO BE REMOVED

PRIVATE ENGINEERING NOTE

CONSTRUCTION CONTRACTOR AGREES THAT IN ACCORDANCE WITH GENERALLY ACCEPTED CONSTRUCTION PRACTICES, CONSTRUCTION CONTRACTOR WILL BE REQUIRED TO ASSUME SOLE AND COMPLETE RESPONSIBILITY FOR JOB SITE CONDITIONS DURING THE COURSE OF CONSTRUCTION OF THE PROJECT, INCLUDING SAFETY OF ALL PERSONS AND PROPERTY; THAT THIS REQUIREMENT SHALL BE MADE TO APPLY CONTINUOUSLY AND NOT BE LIMITED TO NORMAL WORKING HOURS, AND CONSTRUCTION CONTRACTOR FURTHER AGREES TO DEFEND, INDEMNIFY AND HOLD DESIGN PROFESSIONAL HARMLESS FROM ANY AND ALL LIABILITY, REAL OR ALLEGED, IN CONNECTION WITH THE PERFORMANCE OF WORK ON THIS PROJECT, EXCEPTING LIABILITY ARISING FROM THE SOLE NEGLIGENCE OF DESIGN PROFESSIONAL.

CURVE DATA				
NO.	R	Δ	T	L
①	27.00'	90°18'50"	27.15'	42.56'
②	27.00'	89°41'10"	26.85'	42.26'
③	115.00'	15°00'00"	15.14'	30.11'
④	36.00'	210°00'00"	L/B=26.39	131.95'

REGISTERED CIVIL ENGINEER — ROBERT S. HIPPER — No. 13699 — EXP. 3-31-89 — CIVIL — STATE OF CALIFORNIA

GRAPHIC SCALE
0 20 40 80 120 160 FT.

CITY OF RIVERSIDE WATER DEPT.
Carl Winegartner 9/9/87
APPROVED DATE

PREPARED UNDER THE DIRECTION OF: ROBERT S. HIPPER Robert S. Hipper
REGISTERED CIVIL ENGINEER No. 13699
EXPIRATION DATE: 3-31-89 DATE: 2-16-87

J.F. DAVIDSON ASSOCIATES, INC.
CIVIL ENGINEERS ○ SURVEYORS ○ PLANNERS
3426 TENTH STREET, RIVERSIDE, CAL. — 11200 S. MT. VERNON AVE., COLTON, CAL.

SCALE: HORIZ. 1"=40' VERT. 1"=4'
DATE DEC. 1986
BENCH MARK: FD. BRASS DISC IN CONCRETE STAMPED M.L.V. 539, 1971, RIVERSIDE COUNTY SURVEYOR 144' N'LY OF ARIZONA AVE. AND 36' E'LY OF LA SIERRA AVE. ELEV: 1188.41

MARK	REVISIONS	APPR.	DATE
1	AS BUILT	JWL	9/10/87

DESIGNED BY R.L.S. DRAWN BY M.P. CHECKED BY R.L.S.

CITY OF RIVERSIDE, CALIFORNIA
DEPARTMENT OF PUBLIC WORKS

	BY	DATE
APPROVED BY: PRINCIPAL ENGINEER		10-21-87
PARK DEPARTMENT		9-18-87
TRAFFIC DIVISION		10-20-87
CHIEF P. W. ENGR.		11-13
	JWL	9/10/87

APPROVED BY: DIRECTOR OF PUBLIC WORKS
DATE 11/18/87

TRACT NO. 21979
STREET IMPROVEMENT PLAN & PROFILE
LATIMER LANE ~ LEOTA LANE

FOR: KEUSDER ENTERPRISES

PROJECT NO. R-2885
SHEET 4 OF 5
FILE NO. 86-9462(M)

R2-2143

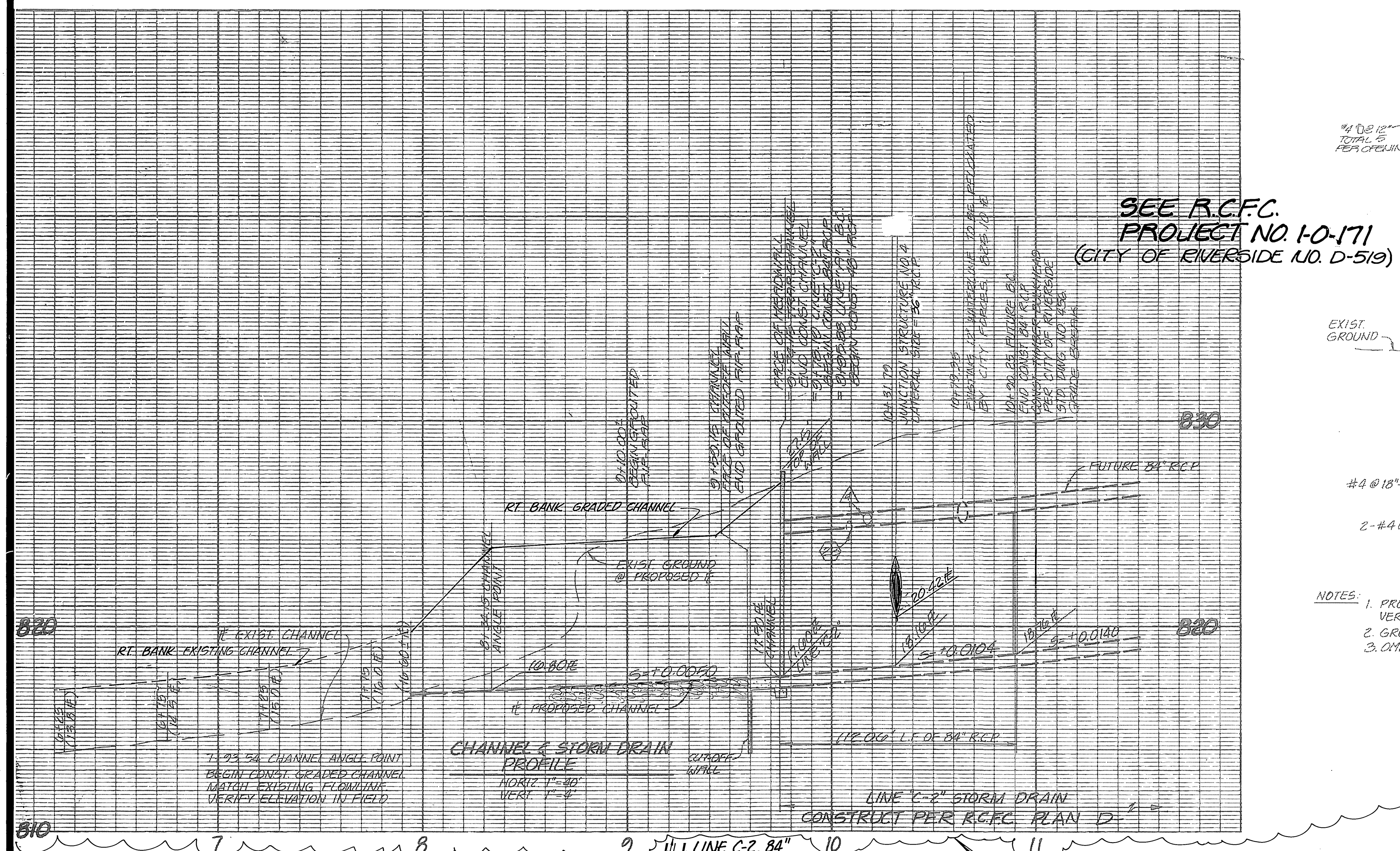

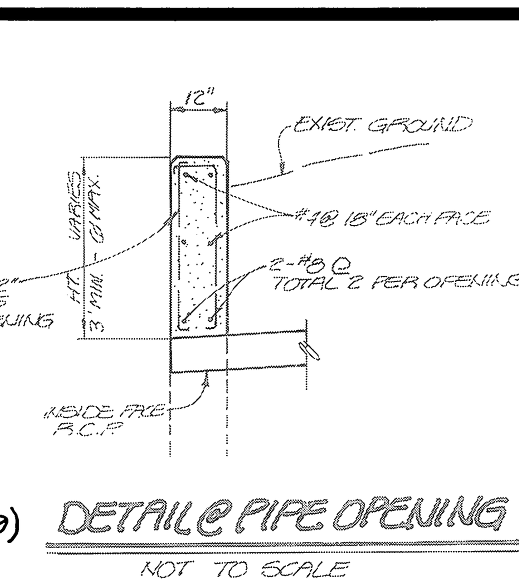

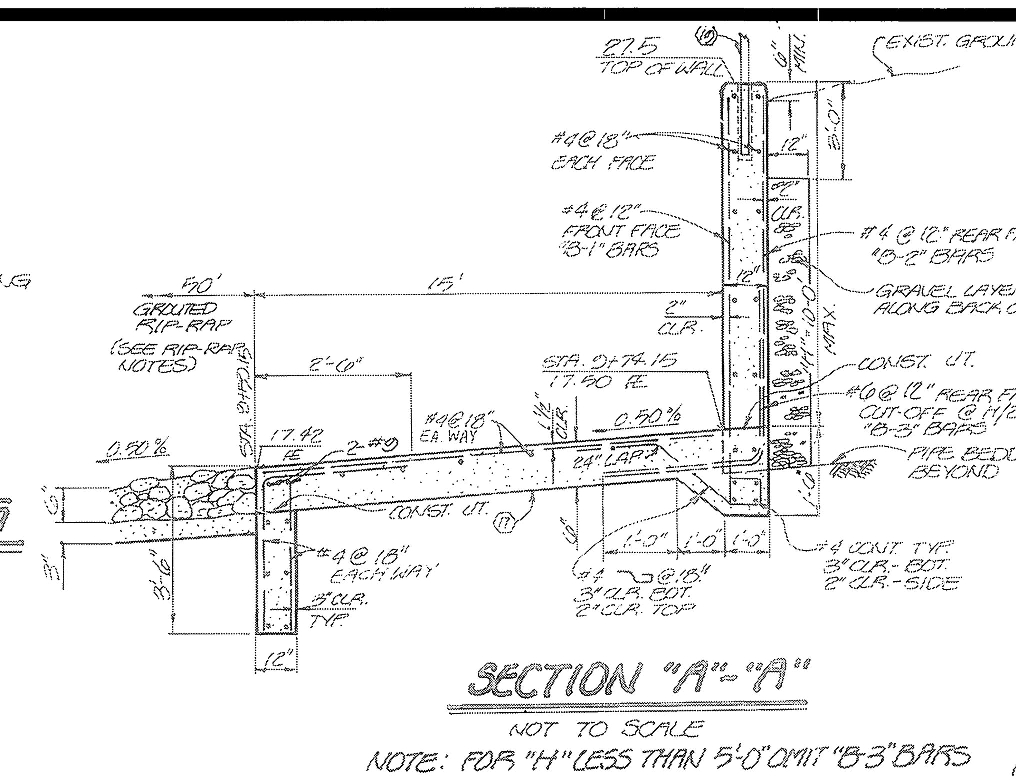

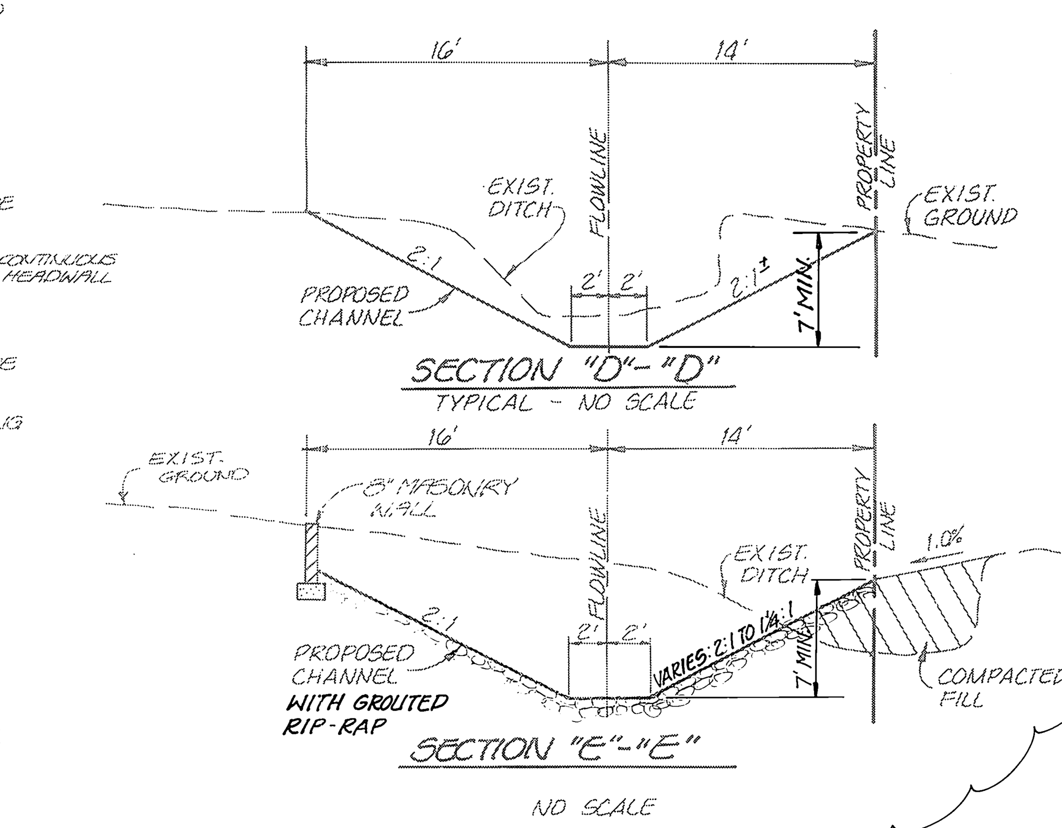

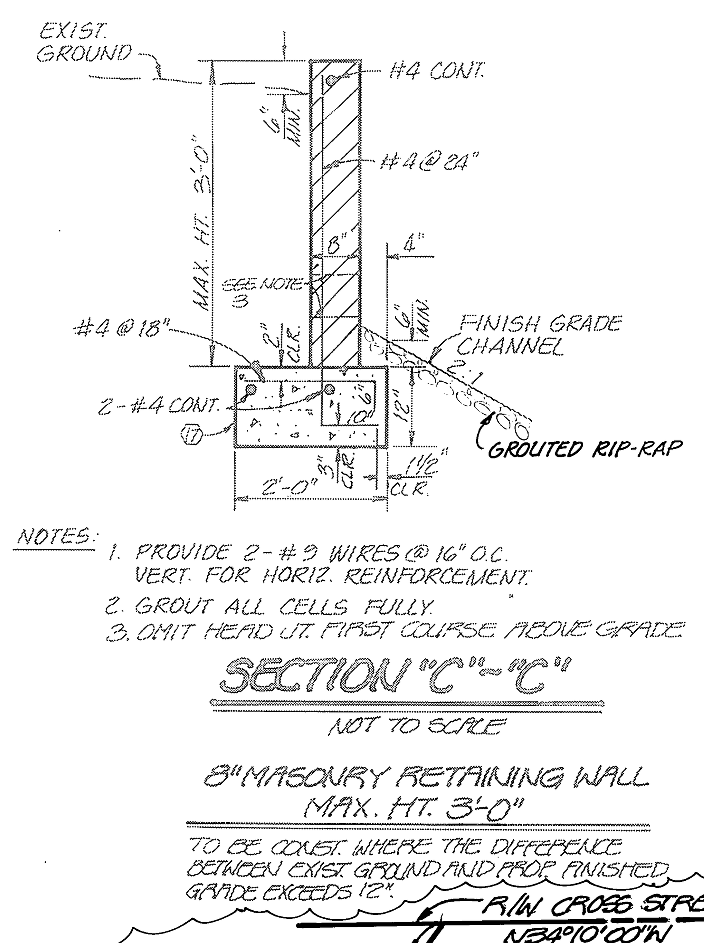

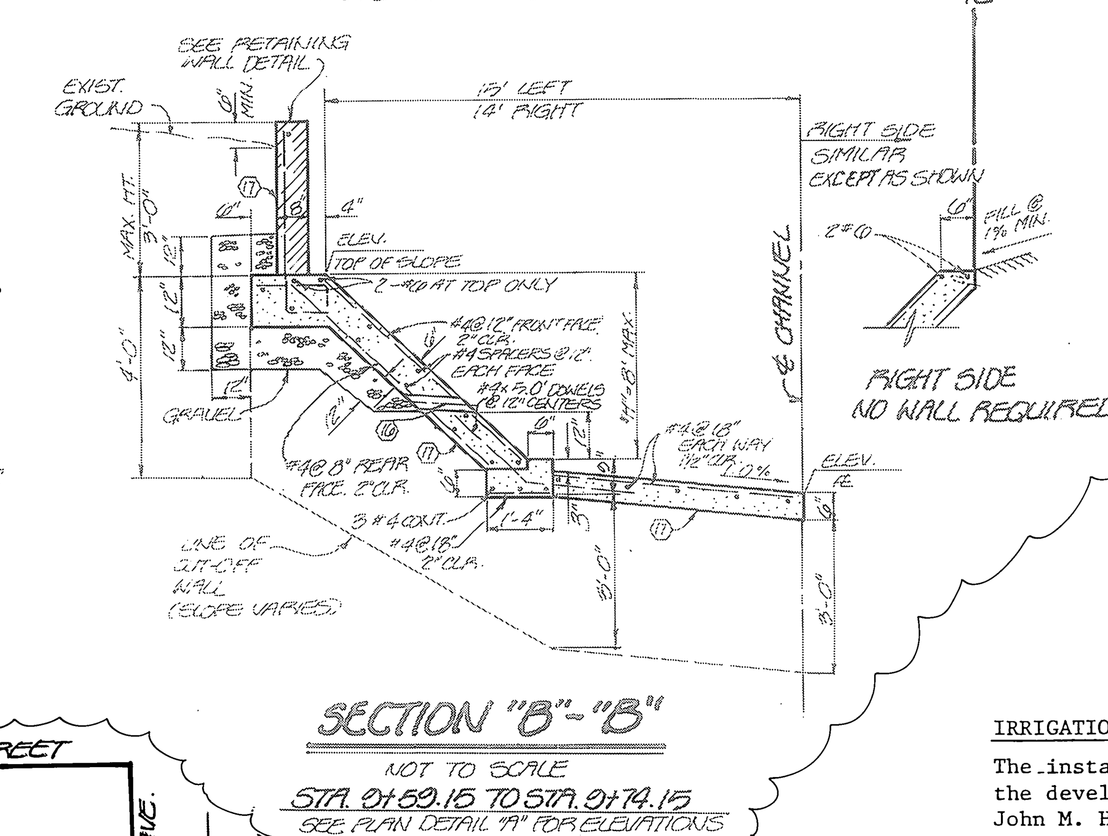

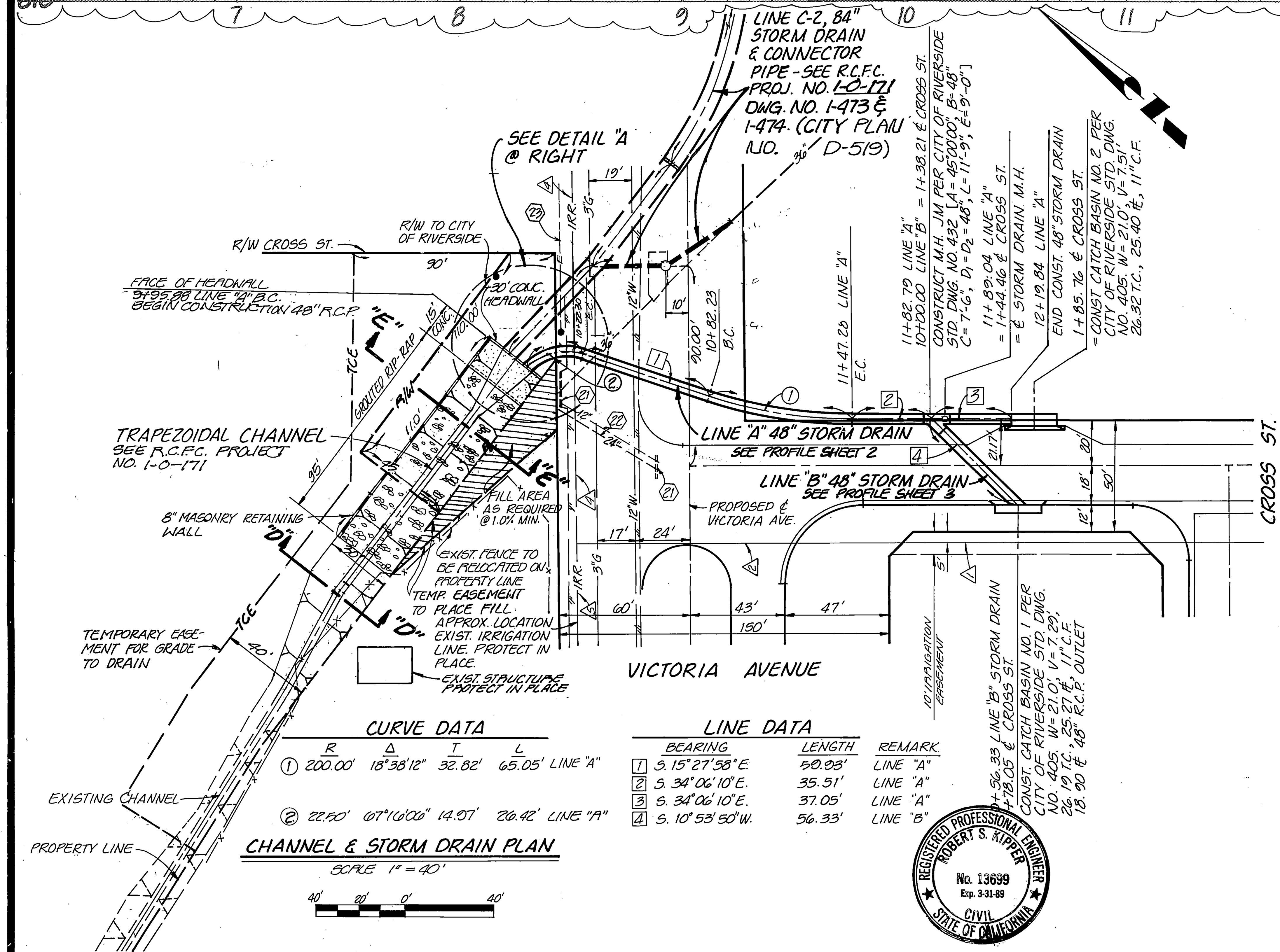

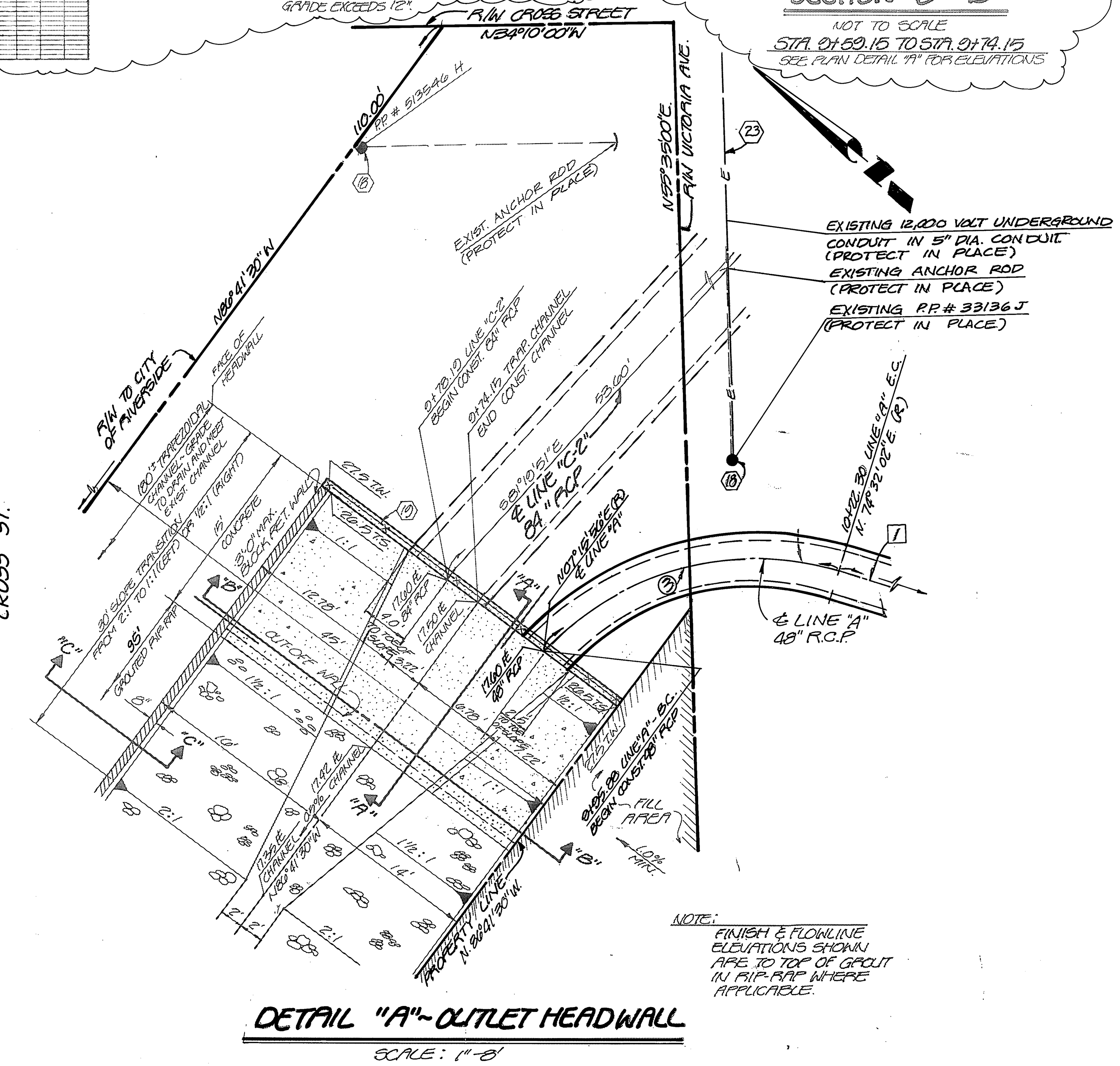

IRRIGATION LINE NOTES

The installation and relocation of irrigation lines and facilities by the developer shall be done under the direction and supervision of John M. Hocking, Manager of the Gage Canal Company or his representative. The Gage Canal Company shall approve all construction material used and shall not be liable for and/or incur any cost or expense for materials or installation.

1. Install 8" P.V.C. irrigation line.
2. Install 8" steel irrigation line across street improvements.
3. Existing irrigation standpipe to be relocated.
4. Existing irrigation line to remain in operation and be protected in place until installation of new facilities are complete, then line is to be abandoned.
5. Existing irrigation line protect in place.

CONSTRUCTION NOTES

(18) EXISTING POWER POLE TO BE PROTECTED IN PLACE.
NOTE: CONTACT THE CITY OF RIVERSIDE PUBLIC UTILITY DEPT. ~ ELECTRICAL DEPT. TEN (10) DAYS PRIOR TO CONST.

(21) EXISTING STORM DRAIN STRUCTURE TO BE REMOVED.

(22) EXISTING STORM DRAIN PIPE TO BE REMOVED.

(23) APPROXIMATE LOCATION OF 12,000 VOLT POWER LINE. CONTACT CITY OF RIVERSIDE PUBLIC UTILITY DEPT. TEN (10) DAYS PRIOR TO CONSTRUCTION.

CITY OF RIVERSIDE WATER DEPARTMENT
Carl Weingartner 9/9/87
APPROVED DATE

CITY OF RIVERSIDE OVERHEAD & UNDERGROUND
For M. J. Torelli 7/2/87
CHIEF UTILITIES ENGINEER ELEC. DATE

GAGE CANAL CO.
John M. Hocking 7-24-1987
APPROVED JOHN M. HOCKING DATE

SOUTHERN CALIFORNIA GAS CO.
O.R. McGowan 8-25-87
APPROVED DATE

PREPARED UNDER THE DIRECTION OF
ROBERT S. KIPPER Robert S. Kipper
REGISTERED CIVIL ENGINEER NO. 13699
EXPIRATION DATE 3-31-89 DATE: 9-16-87
APPROVED BY:

J F DAVIDSON ASSOCIATES, INC.
CIVIL ENGINEERS • SURVEYORS • PLANNERS
P.O. BOX 493 ☐ RIVERSIDE, CA 92502 (714) 686-0844
■ 11200 SO. MT. VERNON AVE., #D COLTON, CA 92324 (714) 825-1082
☐ 73-080 EL PASEO, #103 PALM DESERT, CA 92260 (619) 346-5691
JFD ASSOCIATES

SCALE: AS NOTED
BENCH MARK: SEE SHEET NO. 1
DATE

MARK	REVISIONS	APPR.	DATE

DESIGNED BY TNT DRAWN BY JMS CHECKED BY Rich

CITY OF RIVERSIDE, CALIFORNIA
DEPARTMENT OF PUBLIC WORKS

APPROVED BY	BY	DATE
PRINCIPAL ENGINEER	[illegible]	10-21-87
PARK DEPARTMENT	—	—
TRAFFIC DIVISION	—	—
CHIEF P. W. ENGR.	[illegible]	11-13 / 11/10/87

APPROVED BY Barry Beck
DIRECTOR OF PUBLIC WORKS
DATE 11/18/87

TRACT NO. 21979
CHANNEL & STORM DRAIN PLAN FOR LINE "A" & "B"
FOR: KEUSDER ENTERPRISES

AS BUILT 4/7/93 RJM
PROJECT NO. R-2885
SHEET 5 OF 5
FILE NO. 86-9462(M)