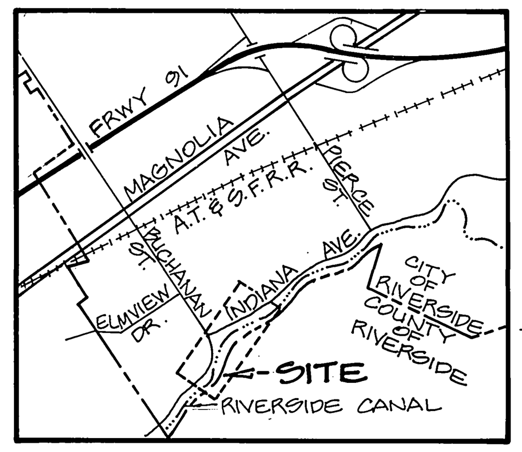

LOCATION MAP
NO SCALE

ESTIMATE OF QUANTITES

ROADWAY EXCAVATION — 25,145 C.Y.
ASPHALT CONCRETE — 79,268 S.F.
AGGREGATE BASE — 79,268 S.F.
6" CURB & GUTTER — 1632 L.F.
8" CURB & GUTTER — 513 L.F.
SIDEWALK — 12,867 S.F.
A.C. OVERLAY — 3 TONS
CATCH BASINS — 3 EA.
STREET SIGNS
CLASS I, TYPE F MARKERS — 14 EA.
UTILITY TRENCH — 2000 L.F.
12" A.C.P. WATERLINE — 355 ± L.F. (BY CITY FORCES)

NOTICE TO CONTRACTOR

1. THE EXISTENCE AND LOCATION OF ANY UNDERGROUND UTILITY PIPES OR STRUCTURES SHOWN ON THESE PLANS ARE OBTAINED BY A SEARCH OF THE AVAILABLE RECORDS. TO THE BEST OF OUR KNOWLEDGE, THERE ARE NO EXISTING UTILITIES EXCEPT THOSE SHOWN ON THESE PLANS.
2. THE CONTRACTOR IS REQUIRED TO TAKE DUE PRECAUTIONARY MEASURES TO PROTECT THE UTILITY LINES SHOWN AND ANY OTHER LINES NOT OF RECORD OR NOT SHOWN ON THESE PLANS.
3. CALL UNDERGROUND SERVICE ALERT (U.S.A.) 1-800-422-4133 AT LEAST 48 HOURS PRIOR TO EXCAVATION.

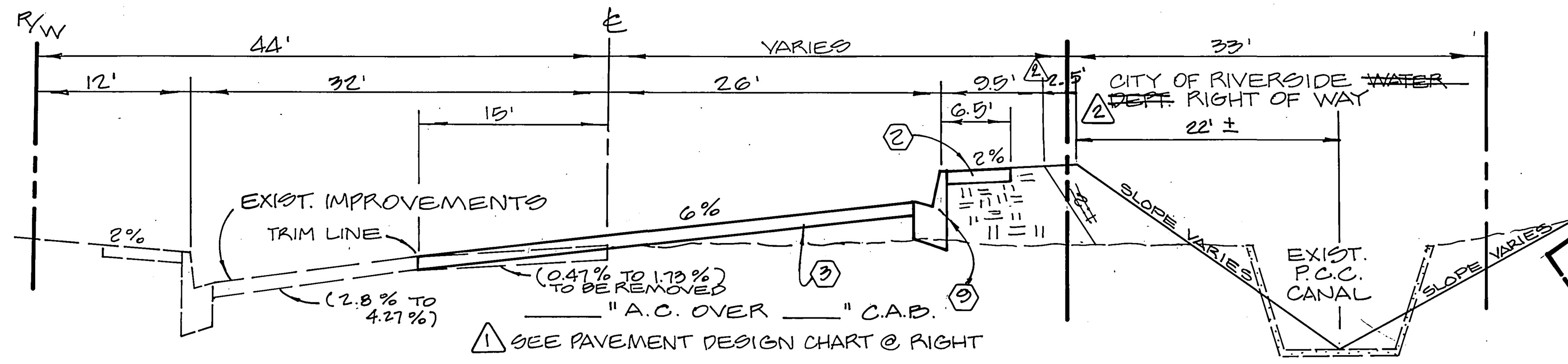

TYPICAL SECTION - INDIANA AVENUE
STA. 16+04.79 TO STA. 21+91 T.I. = 7 SCALE 1"=10'

2 GRADE AREA TO MAINTAIN FL. @ APPROX. ℄ OF THE EXIST. CANAL. GRADED SWALE SHALL FLOW SOUTH W'LY. INTO EXIST DRAINAGE PIPE UNDER BERM

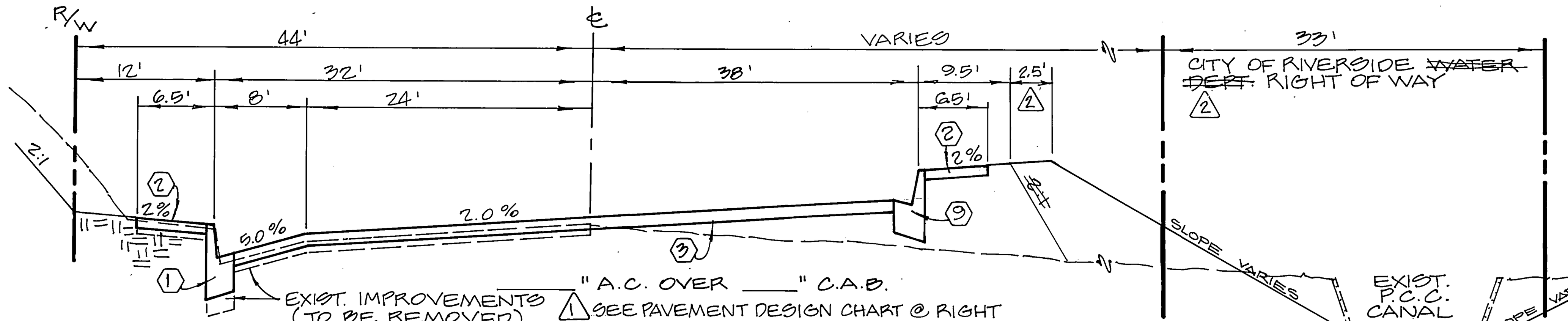

TYPICAL SECTION - INDIANA AVENUE
STA. 21+91 TO STA. 23+20.42 T.I. = 7 SCALE 1"=10'

2 GRADE AREA TO MAINTAIN FL. @ APPROX. THE ℄ OF THE EXIST CANAL. GRADED SWALE SHALL FLOW SOUTH W'LY. INTO EXIST. DRAINAGE PIPE UNDER BERM.

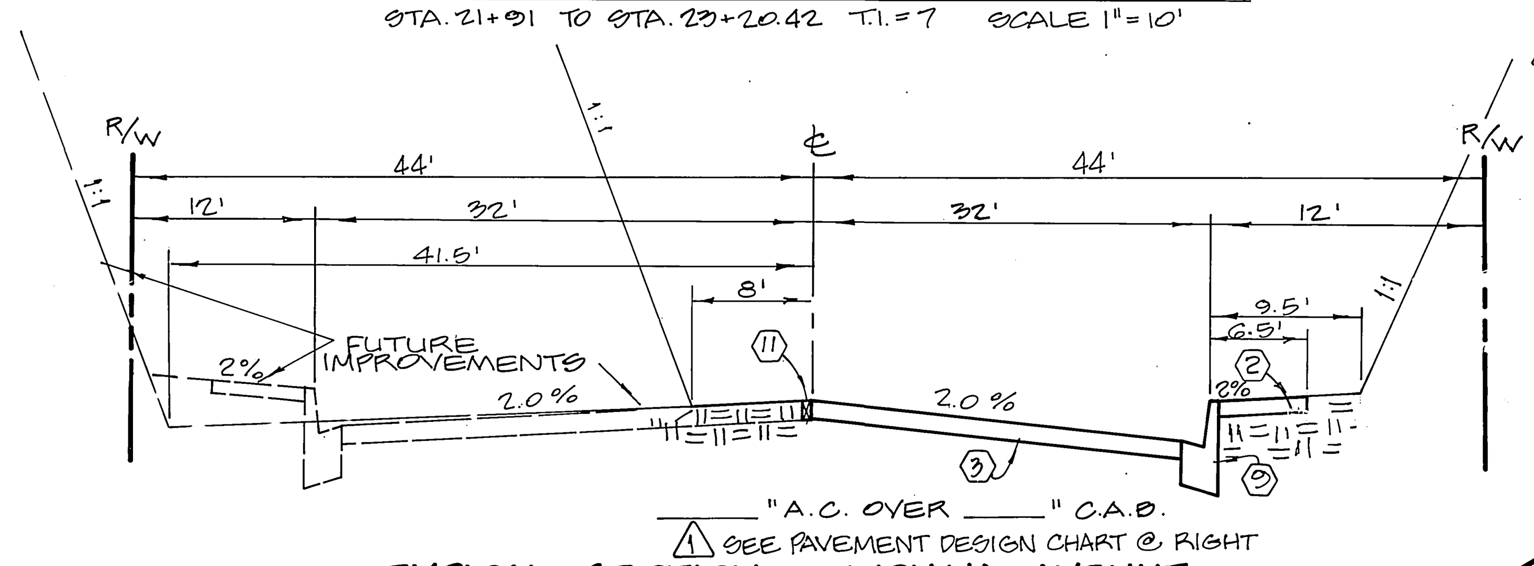

TYPICAL SECTION — INDIANA AVENUE
STA. 23+26.33 TO STA. 31+98.36 T.I. = 7 NO SCALE

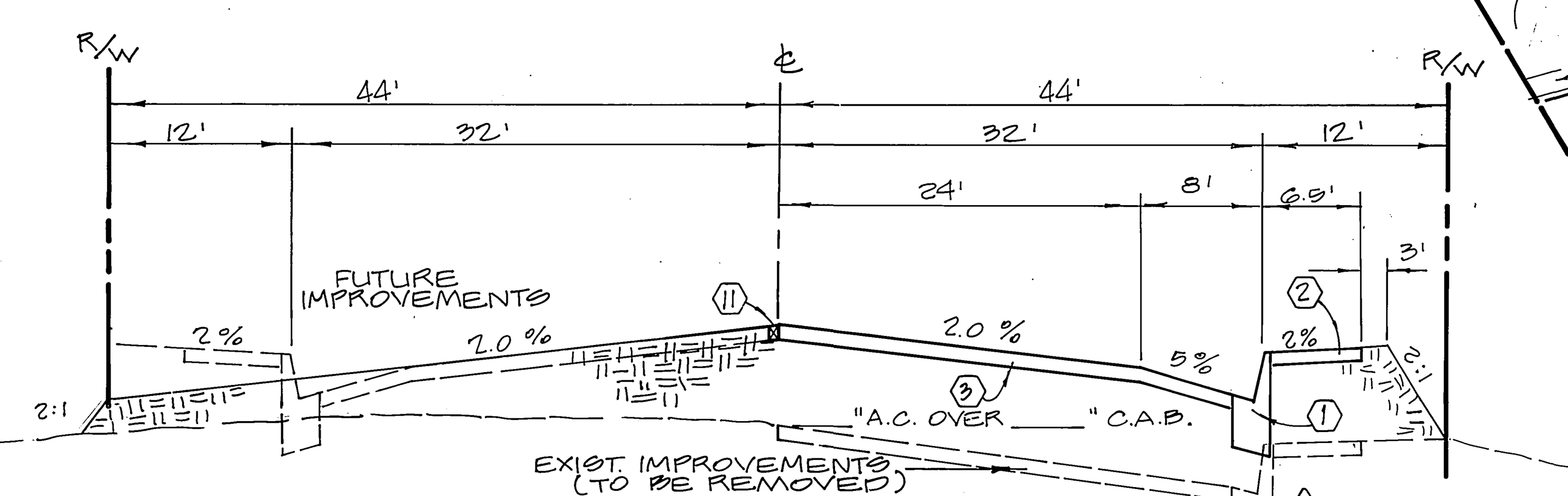

TYPICAL SECTION - BUCHANAN STREET
STA. 18+65.68 TO STA. 23+13.60 T.I. = 7 SCALE 1"=10'

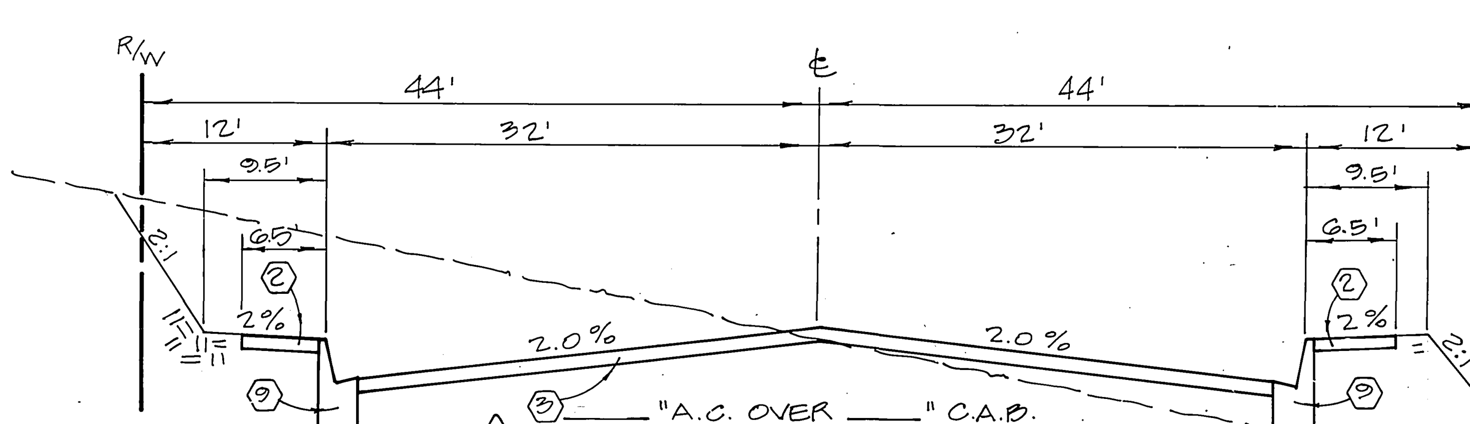

TYPICAL SECTION - BUCHANAN STREET
STA. 22+13.60 TO STA. 23+13.60 T.I. = 7 SCALE 1"=10'

NOTE: (12" WATER MAIN INSTALLATION, ONLY)
A 15 WORKING DAY PERIOD MUST BE PROVIDED FOLLOWING STREET SUBGRADE CONSTRUCTION FOR WATER MAIN INSTALLATION. IT IS THE RESPONSIBILITY OF THE DEVELOPER TO PROVIDE THE P.U. WATER CONSTRUCTION DIVISION A WEEK ADVANCED NOTICE, IN ORDER TO SCHEDULE WATER CONSTRUCTION ACTIVITIES (782-5304) FINAL PAVEMENT SHALL NOT BE PERFORMED UNTIL THE WATER MAIN HAS BEEN TESTED AND CONNECTED.

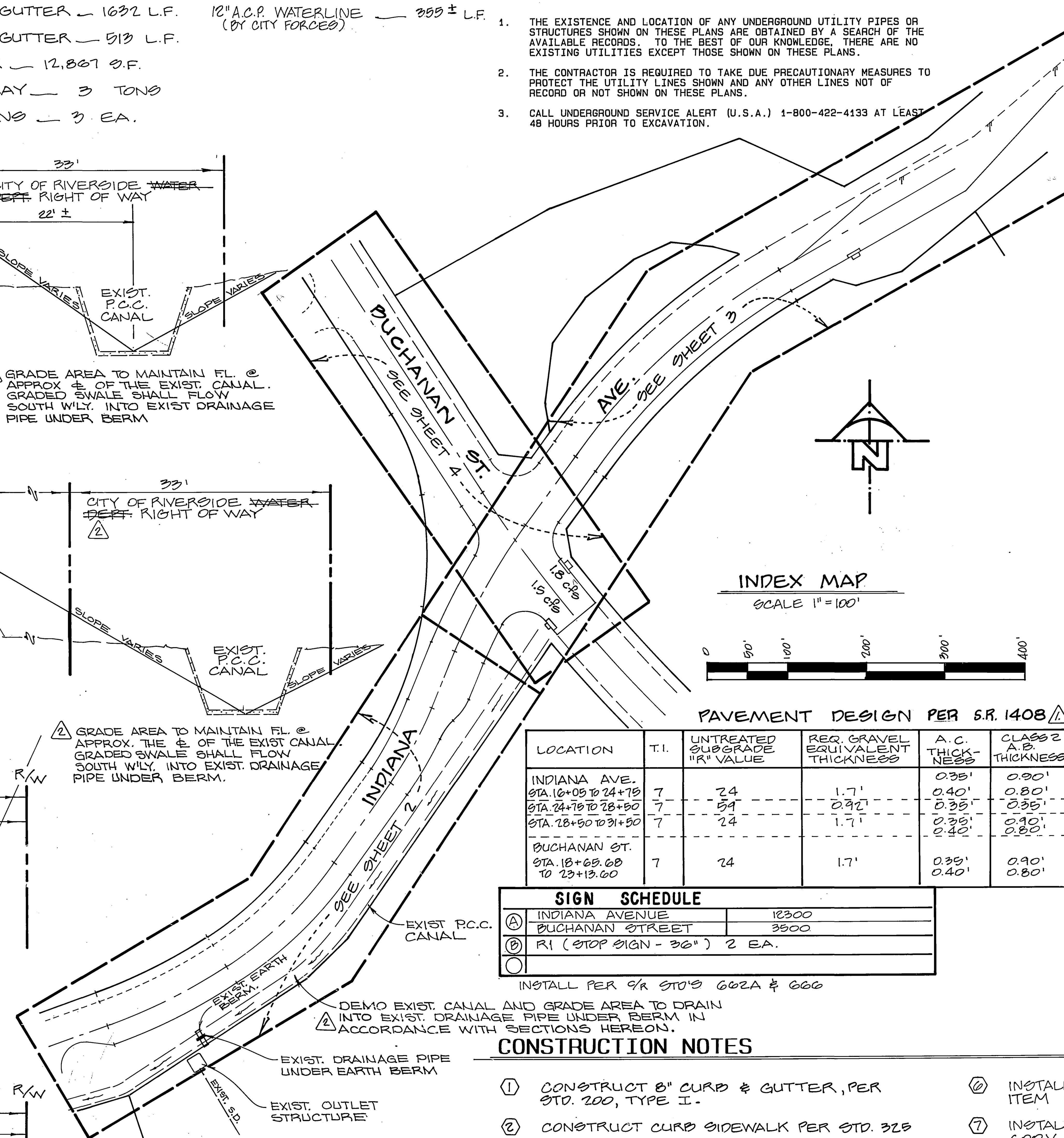

INDEX MAP
SCALE 1" = 100'

PAVEMENT DESIGN PER S.R. 1408 1

LOCATION	T.I.	UNTREATED SUBGRADE "R" VALUE	REQ. GRAVEL EQUIVALENT THICKNESS	A.C. THICK-NESS	CLASS 2 A.B. THICKNESS
INDIANA AVE.				0.35'	0.90'
STA. 16+05 TO 24+75	7	24	1.7'	0.40'	0.80'
STA. 24+75 TO 28+50	7	59	0.92'	0.35'	0.35'
STA. 28+50 TO 31+50	7	24	1.7'	0.35' 0.40'	0.90' 0.80'
BUCHANAN ST. STA. 18+65.68 TO 23+13.60	7	24	1.7'	0.35' 0.40'	0.90' 0.80'

SIGN SCHEDULE		
A	INDIANA AVENUE	12300
	BUCHANAN STREET	3500
B	R1 (STOP SIGN - 36") 2 EA.	

INSTALL PER C/R STD'S 662A & 666

GENERAL NOTES

1. IT SHALL BE THE RESPONSIBILITY OF THE CONTRACTOR TO CLEAR THE RIGHT OF WAY IN ACCORDANCE WITH THE PROVISIONS OF LAW AS IT AFFECTS EACH UTILITY INCLUDING IRRIGATION LINES AND APPURTENANCES AND AT NO COST TO THE CITY.
2. CONSTRUCTION SHALL BE IN ACCORDANCE WITH THE CITY OF RIVERSIDE DEPARTMENT OF PUBLIC WORKS, STANDARD DRAWINGS, STANDARD DRAWING NO. 10 AND THE STANDARD SPECIFICATIONS FOR PUBLIC WORKS CONSTRUCTION, CURRENT EDITION.
3. THE PRIVATE ENGINEER SIGNING THESE PLANS IS RESPONSIBLE FOR ASSURING THE ACCURACY AND ACCEPTABILITY OF THE WORK HEREON IN THE EVENT OF DISCREPANCIES ARISING DURING CONSTRUCTION, THE PRIVATE ENGINEER SHALL BE RESPONSIBLE FOR DETERMINING AN ACCEPTABLE SOLUTION AND REVISING THE PLANS FOR APPROVAL BY THE CITY.
4. THE DEVELOPER SHALL BE RESPONSIBLE FOR PRESERVING OR REESTABLISHING AND REFERENCING SURVEY MONUMENTS DESTROYED, DISTURBED OR BURIED AS A RESULT OF CONSTRUCTION SHOWN HEREON.
5. SEE "STREET LIGHTING PLANS" FOR QUANTITY AND LOCATION OF REQUIRED STREET LIGHTS.
6. ALL FLAGGED ELEVATIONS SHALL BE STAKED IN THE FIELD BY THE PRIVATE ENGINEER.
7. CONSTRUCT DRIVEWAY APPROACHES PER STANDARD DRAWING 302 EXACT SIZE AND LOCATION TO BE DETERMINED AT THE TIME OF CONSTRUCTION AS APPROVED BY THE TRAFFIC ENGINEER.
8. THE CONTRACTOR SHALL CALL IN A LOCATION REQUEST TO UNDERGROUND SERVICE ALERT (USA), PHONE NO. 1-800-422-4133, TWO WORKING DAYS BEFORE DIGGING. NO CONSTRUCTION PERMIT WILL BE ISSUED BY THE PUBLIC WORKS DEPARTMENT INVOLVING EXCAVATION FOR UNDERGROUND FACILITIES UNLESS THE APPLICANT HAS BEEN PROVIDED AN INQUIRY IDENTIFICATION NUMBER BY U.S.A.
9. ON ALL AREAS WITHIN PUBLIC RIGHT OF WAY WHERE THE FILL IS ONE (1) FOOT OR GREATER, A LETTER WILL BE REQUIRED FROM THE SOILS ENGINEER, CERTIFYING THE COMPACTION OF THE FILL BELOW SUBGRADE, PRIOR TO ISSUANCE OF THE CONSTRUCTION PERMIT/CUT SHEETS.
10. ALL TRAFFIC SIGNS SHALL BE INSTALLED PRIOR TO OPENING THE STREETS TO TRAFFIC.
11. ANY TRAFFIC CONTROL STRIPING OBLITERATED AND/OR BADLY WORN DURING CONSTRUCTION SHALL BE RESTORED BY THE CONTRACTOR WITHIN FIVE DAYS AFTER NOTIFICATION FROM THE CITY INSPECTORS.
12. FINAL STRIPING FOR TRAFFIC CONTROL AND/OR PAVEMENT MARKING TO BE THE RESPONSIBILITY OF THE DEVELOPER.
13. TRIM EDGE OF EXISTING PAVEMENT WHERE NEW PAVEMENT JOINS TO A SMOOTH, STRAIGHT LINE. CONSTRUCT MATCH-UP PAVING AS SHOWN ON PLAN AND OVERLAY PAVING AS DIRECTED IN FIELD TO PRODUCE A SMOOTH SECTION.
14. THE SUBDIVIDER SHALL ARRANGE FOR A SOIL TEST TO BE MADE BY A SOILS ENGINEER AFTER THE STREETS HAVE BEEN PREPARED TO ROUGH GRADE AND PRIOR TO CURB AND GUTTER CONSTRUCTION. DEPTH OF BASE MATERIAL AND A.C. PAVING SHALL BE DETERMINED BY THE CITY OF RIVERSIDE DESIGN STANDARDS AND TEST PROCEDURES.
15. INSTALL AND RELOCATE ALL STREET LIGHT FACILITIES AS SHOWN AND IN CONFORMANCE WITH STREET LIGHT SPECIFICATION NO. 119 AND STANDARD DRAWINGS. DEVELOPER TO CONTACT CITY ELEC. DIVISION AT 782-5429 FOR REQUIRED INSPECTIONS.
16. DEVELOPER TO GIVE CITY WATER DIVISION TEN (10) WORKING DAYS WRITTEN NOTICE PRIOR TO START OF CONSTRUCTION AND TO ALLOW CITY FIFTEEN (15) WORKING DAYS FOR COMPLETION OF WORK. (351-6150) (ALSO, REFER TO NOTE @ LOWER LEFT)
17. IN PAVEMENT OVERLAY AREAS, DISTRESSED EXISTING PAVEMENT SHALL BE REMOVED AND REPLACED AS DIRECTED BY THE INSPECTOR PRIOR TO OVERLAYING WITH A.C. PAVING.
18. SEE TRAFFIC ENGINEERING PLAN XL-205 FOR STRIPING.
19. SEE SHEET 2 FOR GENERAL STREET LIGHT NOTES AND STREET LIGHT LEGEND.

CONSTRUCTION NOTES

1. CONSTRUCT 8" CURB & GUTTER, PER STD. 200, TYPE I.
2. CONSTRUCT CURB SIDEWALK PER STD. 325
3. CONSTRUCT A.C. PAVING OVER CRUSHED AGGREGATE BASE, PER TYPICAL SECTIONS ON THIS SHEET.
4. CONSTRUCT 8" A.C. BERM, PER STD. 250
5. CONST. BARRICADE, PER STD. 180
6. INSTALL NEW STREET LIGHT PULL BOX PER ITEM P1 OF UGS-800. PER STREET LIGHT LEGEND
7. INSTALL NEW 1" ~~HDG or DB~~ CONDUIT W/2- ~~#8 CU~~ 600V CABLE. PER STREET LIGHT LEGEND
8. RELOCATE STREET LIGHT TO NEW FOUNDATION PER ITEM S-4 OF UGS-800 & 801.
9. CONSTRUCT 6" CURB & GUTTER, PER STD. 200, TYPE I.
10. CONST. VARIABLE THICKNESS A.C. OVERLAY.
11. CONST. 2 X 4 REDWOOD HEADER.
12. CONST. WHEELCHAIR RAMP, PER STD. 304.
13. INSTALL NEW STREET LIGHT PER STREET LIGHT LEGEND

BENCH MARK ELEV. 697.682

RIV. CO. 601-30-69, STANDARD BRASS DISK STAMPED J38-1924, 0.5 MILES N.E. ALONG THE A.T. & S.F.R.R. FROM THE SIGNAL TOWER AT MAY, RIV. CO., 120 FT. S.E. OF T.P. #44-C, 20 FT. S. OF TELEGRAPH LINE, 13 FT. N. OF A.T. & S.F.R.R., AT CULVERT B-20, 6"x 1' CONC. HEADWALL.

AS BUILT 2/25/93 RJM

APPROVED BY: [signature]
FOR ROAD COMMISSIONER RIVERSIDE COUNTY, CALIF.
DATE: 8/3/88

CITY OF RIVERSIDE OVERHEAD & UNDERGROUND
[signature] 2/24/89
ENGINEERING MANAGER ELECTRIC DATE

CITY OF RIVERSIDE WATER SYSTEM
[signature] 3-7-89
APPROVED DATE

REGISTERED PROFESSIONAL ENGINEER ARTHUR HUBERT WEBB No 11842 Exp. 12-31-92 CIVIL STATE OF CALIFORNIA

ALBERT A. WEBB ASSOCIATES
CIVIL ENGINEERS
3788 McCRAY ST. (714) 686-1070
RIVERSIDE, CALIFORNIA

APPROVED BY [signature] DATE 6-22-87
R.E. No. 11842
W.O. 86-256 FOR: CAMPEAU F.B. 1051

MARK	REVISIONS	APPR.	DATE
2	DEMO EXIST. CANAL	WLW	10/28/91
1	ADDED "PAVEMENT DESIGN" 1-27-90 AG	KWL	1/30/90

DESIGNED BY AJG DRAWN BY AJG CHECKED BY MEW FRED

CITY OF RIVERSIDE, CALIFORNIA
PUBLIC WORKS DEPARTMENT

APPROVED BY	BY	DATE
PRINCIPAL ENGINEER	[initials]	4-14-89
PARK DEPARTMENT	—	—
TRAFFIC DIVISION	[initials]	4-14-89
CHIEF PUB. WKS. ENGR.	[initials] / WLW	4-19 / 2/15/89

APPROVED BY [signature] DIRECTOR OF PUBLIC WORKS DATE 4/20/89

STREET IMPROVEMENT PLAN & PROFILE
INDEX SHEET
(TRACT NO. 19411)
INDIANA AVENUE
BUCHANAN STREET

SCALE: NONE

ACCOUNT No.
DRAWING NUMBER R-2959
SHEET 1 OF 4
86-256 A

INDEXED 4-27-89 LH

STREET LIGHT LEGEND

TENCH, DUCT LINES AND CABLES

——·····—— 1" RIGID PLASTIC (DB) CONDUIT WITH 2-#8 COPPER 600 VOLT CABLES

———— 1" RIGID PLASTIC (DB) CONDUIT

STREET LIGHT ELECTROLIER

CONCRETE STANDARD 26'-9" PER ITEM 83, LUMINAIRE 150W H.P.S. PER ITEM 112, TO BE FURNISHED WITH I.E.S. TYPE III, MEDIUM, SEMI-CUT OFF LIGHT DISTRIBUTION, LAMP 150W. H.P.S. PER ITEM HL3 AND PHOTO CONTROL, ALL PER UGS-800 AND UGS-801.

STREET LIGHT PULLBOX

PB□ PULLBOX (10"x17"x12") PER ITEM P-1 OF UGS-800 INSTALL PER UGS-320.

PROPOSED STREET LIGHT SERVICE POINT

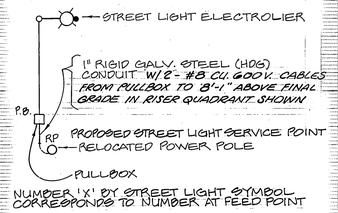

NUMBER 'X' BY STREET LIGHT SYMBOL CORRESPONDS TO NUMBER AT FEED POINT

SERVICE VOLTAGE

240 VOLT SERVICE VOLTAGE

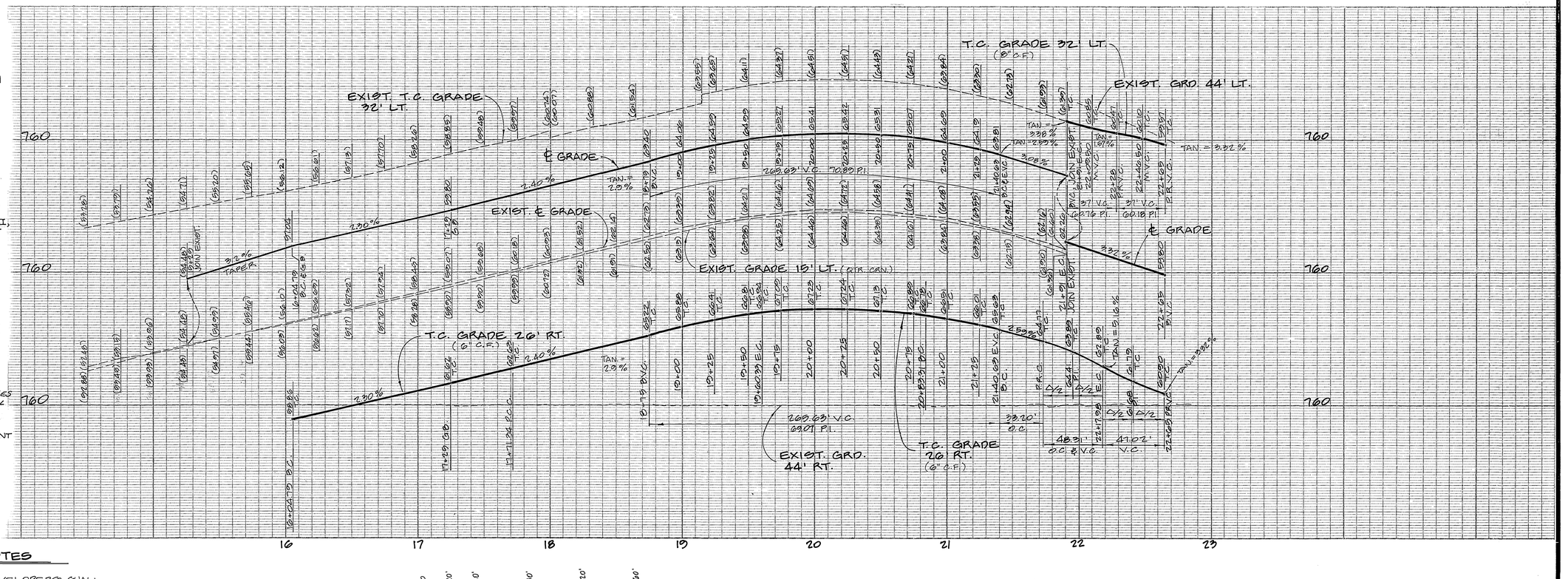

GENERAL STREET LIGHT NOTES

1. ALL FACILITIES INSTALLED BY THE DEVELOPERS SHALL BE INSPECTED AND APPROVED BY THE DEPARTMENT CONSTRUCTION INSPECTOR (PHONE 787-7429). ANY CHANGES SHALL BE APPROVED BY THE DEPARTMENT PRIOR TO EXECUTION. THE DEVELOPER SHALL BE RESPONSIBLE FOR COORDINATING ALL PHASES OF CONSTRUCTION WITH THE DEPARTMENT CONSTRUCTION INSPECTOR AND DEPARTMENT CONSTRUCTION SUPERINTENDENT (PHONE 351-6173).
2. INSTALL A WATERPROOF "IN-LINE" FUSE HOLDER ON THE PHASE LEG CONDUCTORS IN THE BASE OF EACH STREET LIGHT STANDARD. FUSE HOLDER TO BE "BUSSMAN TRON" #HEB, COMPATIBLE WITH SIZE AND TYPE OF WIRE, WITH A "BUSSMAN" FNM 9 AMP 250 VOLT FUSE OR APPROVED EQUAL.
3. ALL STREET LIGHT SERVICE POINTS TO BE CONNECTED BY DEPARTMENT AND ENERGIZED WHEN CLEARED BY DEPARTMENT INSPECTOR.
4. EXCAVATION FOR ELECTROLIER FOUNDATIONS, PULLBOXES AND CONDUITS MUST BE DONE AFTER INSTALLATION OF CURBS AND GUTTERS, BUT BEFORE INSTALLATION OF SIDEWALKS. FOUNDATIONS LOCATIONS SHALL BE APPROVED PRIOR TO EXCAVATION.
5. MARK INSTALLATION DATE ON PHOTO CONTROLS AND LAMPS AS PROVIDED FOR BY THE MANUFACTURERS.
6. DEPARTMENT CONSTRUCTION INSPECTOR MAY REQUIRE ALL PROPERTY LINES TO BE STAKED PRIOR TO EXCAVATION FOR STREET LIGHT FACILITIES.
7. THIS IS A TWO-WIRE 240 VOLT MULTIPLE SYSTEM.
8. ALL CABLE TO BE AWG. NO. 8 COPPER AS SPECIFIED IN SPECIFICATION NO. 119.
9. FEED POINTS TO BE CONFIRMED AT THE TIME OF CONSTRUCTION.
10. # 179 CONNECTION AND INSPECTION FEES TO BE PAID BY CONTRACTOR PRIOR TO STARTING WORK.

BENCH MARK ELEV. 697.682

RIV. CO. 601-30-69, STANDARD BRASS DISK STAMPED J-38-1974, 0.9 MILES N.E. ALONG THE A.T. & S.F.R.R. FROM THE SIGNAL TOWER AT MAY, RIV. CO., 120 FT. S.E. OF T.P. #44-C, 70 FT. S. OF TELEGRAPH LINE, 19 FT. N. OF A.T. & S.F.R.R., AT CULVERT 8'-20, 6"x1' CONC. HEADWALL.

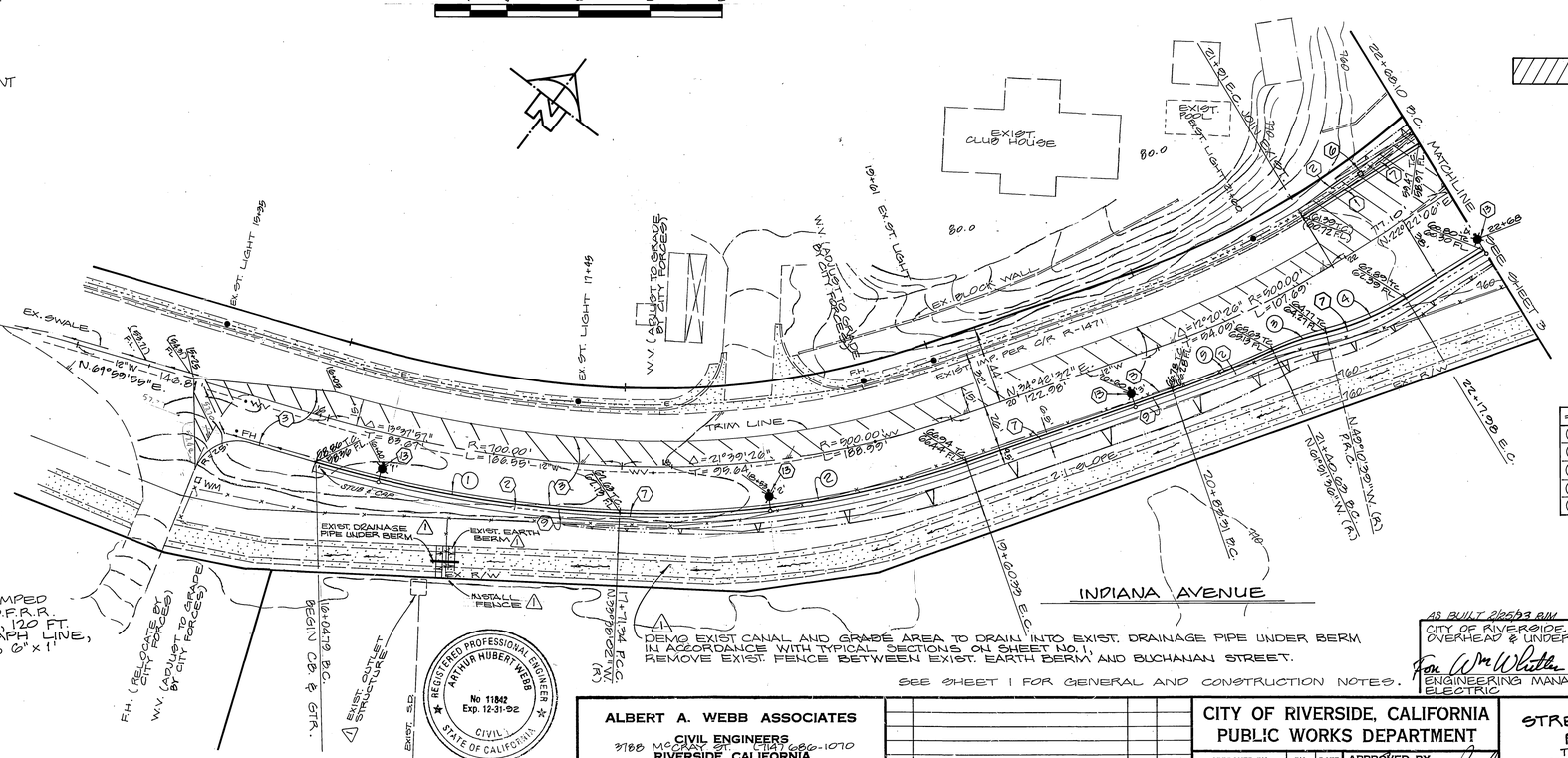

CURVE DATA

#	Δ	R	T	L
①	19°37'57"	72.6'	86.78'	172.74'
②	21°39'26"	52.6'	100.61'	198.82'
③	12°40'57"	190'	16.67'	33.20'
④	18°27'15"	190'	24.97'	48.31'
⑤	6°34'08"	526'	30.19'	60.31'

APPROVED BY:
Elmer F. Baumgardt
FOR ROAD COMMISSIONER
RIVERSIDE COUNTY, CALIF.
DATE: 8/3/88

AS BUILT 2/25/93 RM

CITY OF RIVERSIDE
OVERHEAD & UNDERGROUND
For Mr Whittle 3/24/89
ENGINEERING MANAGER ELECTRIC — DATE

CITY OF RIVERSIDE
WATER SYSTEM
Richard L. Diedrich 3-7-89
APPROVED — DATE

ALBERT A. WEBB ASSOCIATES
CIVIL ENGINEERS
3788 McCRAY ST. (714) 686-1070
RIVERSIDE, CALIFORNIA

APPROVED BY: [signature] DATE 6-22-87
R.E. No. 11842
W.O. 86-256 FOR: CAMPEAU F.B. 1091

MARK	REVISIONS	APPR.	DATE
1	DEMO. EXIST. CANAL	MEW	10-28-91

DESIGNED BY AJG DRAWN BY AJG CHECKED BY MEW

CITY OF RIVERSIDE, CALIFORNIA
PUBLIC WORKS DEPARTMENT

	BY	DATE
APPROVED BY PRINCIPAL ENGINEER	MEW	6-14-87
PARK DEPARTMENT	—	—
TRAFFIC DIVISION	[signature]	6-15-87
CHIEF PUB. WKS. ENGR.	[signature]	6-15-87
	MEW	11/6/89

APPROVED BY [signature] DIRECTOR OF PUBLIC WORKS
DATE 1/20/89

STREET IMPROVEMENT PLAN & PROFILE
TRACT NO. 19411
INDIANA AVENUE
STA. 16+04.79 TO STA. 22+68.10

SCALE: HORIZ. 1" = 40' VERT. 1" = 4'

ACCOUNT No.
DRAWING NUMBER
R-2959
SHEET 2 OF 4
86-256A

INDEXED 4-27-89 LH

T.C. GRADE 32' LT. (6" C.F.)

FUTURE T.C. GRADE 32' LT. (6" C.F.)

T.C. GRADE 26' RT. (6" C.F.)

T.C. GRADE 32' RT. (6" C.F.)

60 L.

60 ℄

60 RT.

60 LT.

EXIST. ℄ GRADE 60 ℄

℄ GRADE

EXIST. GRD. @ ℄

POR. 330' V.C.

330' V.C. 24.32' P.I.

263' V.C. 61.78' P.I.

240' V.C. 57.99' P.I.

240' V.C. 57.78' P.I.

263' V.C. 62.00' P.I.

TAN. = 2.32%

TAN. = 2.5%

TAN. = 2.0%

SUPER ELEV. TRANSITION

EXIST. WATER MAIN

12"W

INDIANA 21+80.82 BUCHANAN

BUCHANAN ST.

INDIANA AVENUE

SEE SHEET 4

SEE SHEET 2

SEE SHEET 3

EX. R/W

TRIM LINE

REMOVE EXIST. P.C.C. CANAL AND BACKFILL

OUTLET STRUCTURE TO BE REMOVED

EX. PER C/R PLAN D-550

EX. INLET # 18 - C.M.P. (TO BE REMOVED)

EX. 18" C.M.P. (TO BE REMOVED)

EX. 24" C.M.P. (TO BE REMOVED)

EX. 30" C.M.P. (TO BE REMOVED)

EX. 3 TREE (REMOVE)

EX. 3 BLOCK WALL (TO REMAIN)

EX. FENCE (TO BE REMOVED)

EX. TRAILER

EX. DRIVE

EX. R/W (TO BE REMOVED)

INSTALL TYPE F-1 FLEXIBLE DELINEATOR, 20' O.C. (TYP.)

PROPOSED STREET LIGHT SERVICE POINT 240

EX. ST. LIGHT (RELOCATED)

EX. 20" STAND P.P. # 30142-J

EX. 30" STAND P.P. # 30140-J

NEW ANCHOR (BY OTHERS) P.P. # 30141-J

W.Y. (BY OTHERS) P.P. # 31-90 END PAVE. REMOVAL & JOIN EXIST.

EX. 30" R.C.P.

EX. 18" R.C.P.

EX. 24" R.C.P.

EX. 18" R.C.E.C.P.

EX. 30" R.C.E.C.P.

EX. 24" R.C.E.C.P.

EX. 30" R.C.E.C.P. (TO BE REMOVED)

EX. 30" R.C.E.C.P. (TO BE RELOCATED)

EX. 30" R.C.E.C.P. REMAINING CAN. WEIR (TO BE REMOVED)

RISER QUADRANT

END P.C.C. CANAL REMOVAL CONST 4" P.C.C. AS SHOWN PER C/R PLAN D-550

31+58.36 TR. BDRY. BEGIN 8:1 TAPER

33+19 END 8:1 TAPER

24+76.47 INDIANA = 21+80.82 BUCHANAN

22+68.10 B.C. MATCHLINE

24+76.50 E.C.R.

N. 89°14'47" E. (R.)

N. 89°24'01" E. (R.)

N. 89°26'50" W.

N. 80°26'50" E.

R=800'

Δ=25°01'00"

T=177.48'

L=349.30'

1:1 SLOPE

1:1 SLOPE (FUTURE)

GRADE 18' DIA. CIRCLE

TRIM LINE

4" CLASS "A" P.C.C. W.W. 6"x6" - #10 x #10 W.W.M.

REMOVE EXIST. P.C.C. AND BACKFILL

P.C.C. CANAL REPLACEMENT DETAIL

NO SCALE

INDICATES EXIST. IMPROVEMENTS TO BE REMOVED

⚠1 DEMO EXIST. CANAL AND GRADE AREA TO DRAIN INTO EXIST. DRAINAGE PIPE UNDER BERM, IN ACCORDANCE WITH TYPICAL SECTIONS ON SHEET NO. 1

CURVE DATA

#	Δ	R	T	L
1	69°17'08"	35'	27.43'	39.80'
2	110°56'09"	35'	50.86'	67.77'
3	114°17'53"	35'	54.21'	69.82'
4	73°11'03"	35'	29.98'	44.71'
5	8°10'53"	832'	60.60'	120.98'
6	3°44'51"	762'	24.93'	49.88'
7	1°36'33"	800'	11.50'	23.01'
8	29°01'00"	832'	184.98'	369.27'
9	20°01'00"	768'	170.38'	339.99'

BENCH MARK ELEV. 627.682

RIV. CO. 601-30-69, STANDARD BRASS DISK STAMPED J38-1974, 0.9 MILES N.E. ALONG THE A.T. & S.F.R.R. FROM THE SIGNAL TOWER AT MAY, RIV. CO., 120 FT. S.E. OF T.P. #44-C, 20 FT. S. OF TELEGRAPH LINE, 13 FT. N. OF A.T. & S.F.R.R., AT CULVERT B-20, 6' x 1' CONC. HEADWALL.

AS BUILT 2/25/93 R.M.

APPROVED BY:
FOR ROAD COMMISSIONER
RIVERSIDE COUNTY, CALIF.
DATE: 8/3/88

REGISTERED PROFESSIONAL ENGINEER ARTHUR HUBERT WEBB No 11842 Exp. 12-31-90 CIVIL STATE OF CALIFORNIA

CITY OF RIVERSIDE OVERHEAD & UNDERGROUND
ENGINEERING MANAGER ELECTRIC — DATE 2/27/89

CITY OF RIVERSIDE WATER SYSTEM
APPROVED — DATE 3-7-89

SEE SHEET 1 FOR GENERAL AND CONSTRUCTION NOTES.

ALBERT A. WEBB ASSOCIATES
CIVIL ENGINEERS
3788 McCRAY ST. (714) 682-1070
RIVERSIDE, CALIFORNIA
APPROVED BY A. Webb DATE 6.22.87
R.E. No. 11842
W.O. 86-296 FOR: CAMPEAU F.B. 1001

MARK	REVISIONS	APPR.	DATE
⚠1	DEMO EXIST. CANAL	MEW	11/19/87

DESIGNED BY AJG DRAWN BY AJG CHECKED BY MEW

CITY OF RIVERSIDE, CALIFORNIA
PUBLIC WORKS DEPARTMENT

APPROVED BY	BY	DATE
PRINCIPAL ENGINEER	MEW	4-14-89
PARK DEPARTMENT		
TRAFFIC DIVISION		4-19-89
CHIEF P/I/B WKS. ENGR.		4-19-89
		4/19/89

APPROVED BY Barry Bell
DIRECTOR OF PUBLIC WORKS
DATE 4/20/89

STREET IMPROVEMENT PLAN & PROFILE
TRACT NO. 19411
INDIANA AVENUE
STA. 22+68.10 TO STA. 33+19

SCALE: HORIZ. 1"=40' VERT. 1"=4'

ACCOUNT No.
DRAWING NUMBER R-2959
SHEET 3 OF 4
86-296A

INDEXED 4-27-89 FH

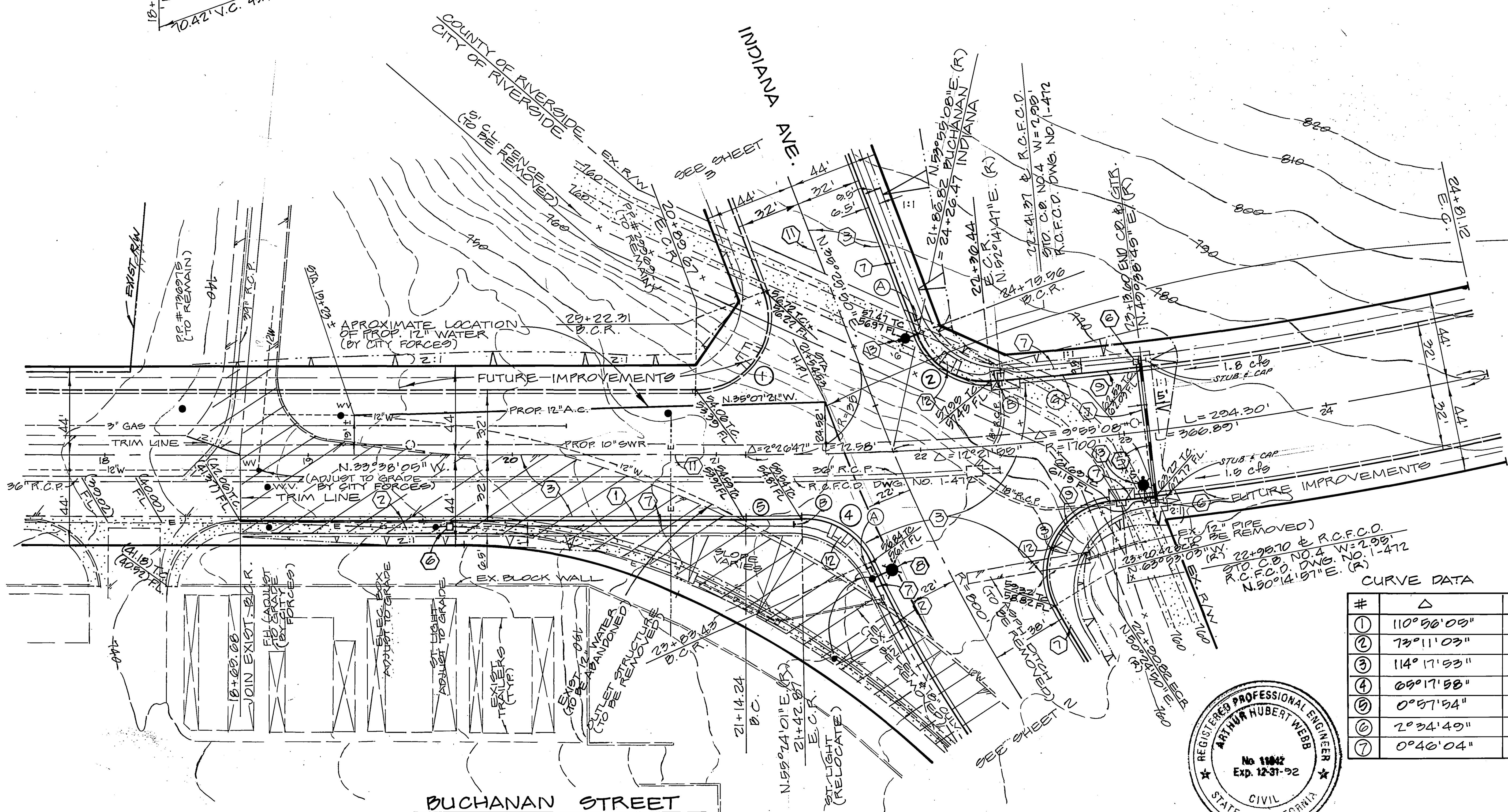

CURVE DATA

#	Δ	R	T	L
1	110°56'05"	35'	50.86'	67.77'
2	73°11'03"	35'	25.99'	44.70'
3	114°17'53"	35'	54.21'	69.82'
4	65°17'58"	35'	22.43'	39.89'
5	0°57'54"	1732'	14.58'	29.17'
6	2°34'49"	1668'	37.56'	75.12'
7	0°46'04"	1732'	11.60'	23.21'

NOTE: (12" WATER MAIN INSTALLATION, ONLY)

A 15 WORKING DAY PERIOD MUST BE PROVIDED FOLLOWING STREET SUBGRADE CONSTRUCTION FOR WATER MAIN INSTALLATION. IT IS THE RESPONSIBILITY OF THE DEVELOPER TO PROVIDE THE P.U. WATER CONSTRUCTION DIVISION A WEEK ADVANCED NOTICE IN ORDER TO SCHEDULE WATER CONSTRUCTION ACTIVITIES (782-5304). FINAL PAVEMENT SHALL NOT BE PERFORMED UNTIL THE WATER MAIN HAS BEEN TESTED AND CONNECTED.

BENCH MARK ELEV. 697.682

RIV. CO. 601-30-69, STANDARD BRASS DISK STAMPED J38-1924, 0.5 MILES N.E. ALONG THE A.T. & S.F.R.R. FROM THE SIGNAL TOWER AT MAY, RIV. CO., 120 FT. S.E. OF T.P. #44-C, 20 FT. S. OF TELEGRAPH LINE, 13 FT. N. OF A.T. & S.F.R.R., AT CULVERT B-20, 6"x1' CONC. HEADWALL.

INDICATES EXIST. IMPROVEMENTS TO BE REMOVED

REGISTERED PROFESSIONAL ENGINEER ARTHUR HUBERT WEBB No. 11842 Exp. 12-31-92 CIVIL STATE OF CALIFORNIA

APPROVED BY: Elmer F. Baumgarten FOR ROAD COMMISSIONER RIVERSIDE COUNTY, CALIF. DATE: 8/3/88

AS BUILT 2/25/93 RJM

SOUTHERN CALIF. GAS CO. — APPROVED — DATE 9-1-87

CITY OF RIVERSIDE OVERHEAD & UNDERGROUND — For Wm Whitten, ENGINEERING MANAGER ELECTRIC — DATE 2/24/89

CITY OF RIVERSIDE WATER SYSTEM — Richard L. Diebek, APPROVED — DATE 3-7-89

SEE SHEET 1 FOR GENERAL AND CONSTRUCTION NOTES.

ALBERT A. WEBB ASSOCIATES
CIVIL ENGINEERS
3788 McCRAY ST. (714) 686-1070
RIVERSIDE, CALIFORNIA
APPROVED BY A. Albert Webb DATE 6-22-87
R.E. No. 11842
W.O. 86-256 FOR: CAMPEAU F.B. 1051

MARK	REVISIONS	APPR.	DATE

DESIGNED BY AJG DRAWN BY AJG CHECKED BY MEW

CITY OF RIVERSIDE, CALIFORNIA
PUBLIC WORKS DEPARTMENT

APPROVED BY	BY	DATE
PRINCIPAL ENGINEER		4-10-89
PARK DEPARTMENT	—	—
TRAFFIC DIVISION		4-19-89
CHIEF PUB. WKS. ENGR.		4-19 / 4/18/89

APPROVED BY Barry Beck DIRECTOR OF PUBLIC WORKS DATE 4/20/89

STREET IMPROVEMENT PLAN & PROFILE
TRACT NO. 19411
BUCHANAN STREET
STA. 18+65.68 TO STA. 21+86.82

SCALE: HORIZ. 1" = 40' VERT. 1" = 4'

ACCOUNT No.
DRAWING NUMBER R-2959
SHEET 4 OF 4
86-256A

INDEXED 4-27-89