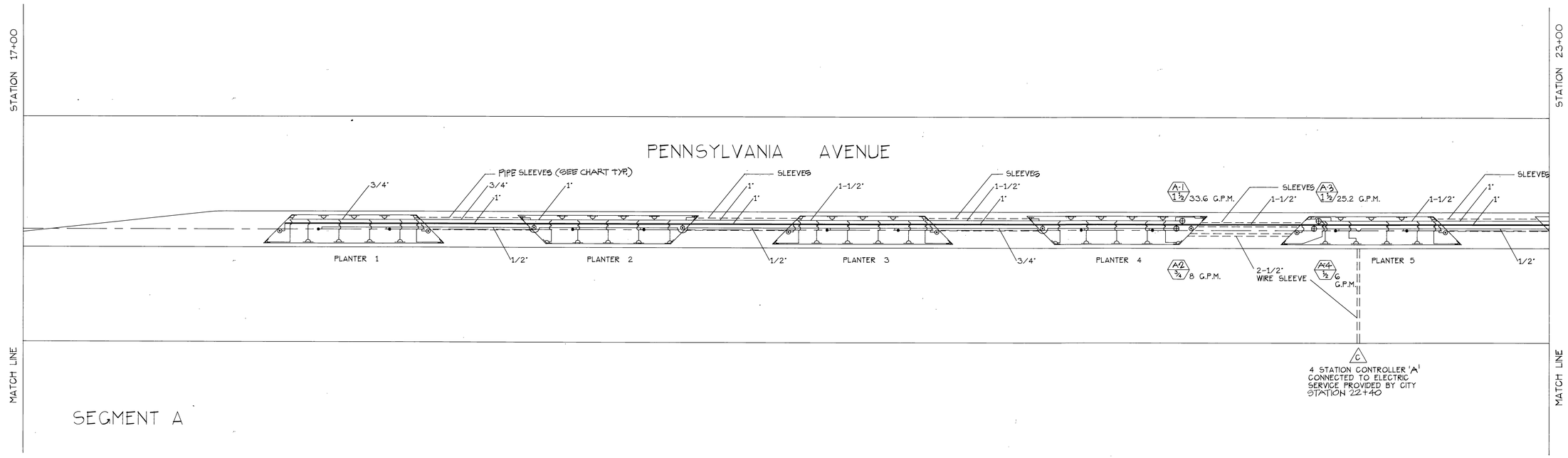

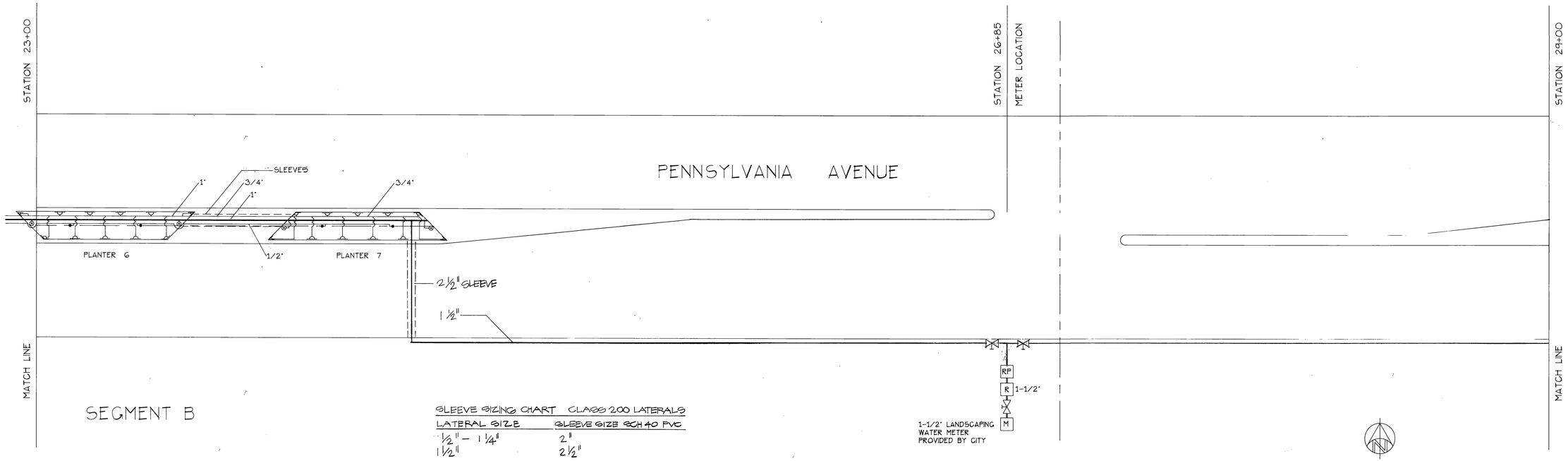

SLEEVE SIZING CHART CLASS 200 LATERALS

LATERAL SIZE	SLEEVE SIZE SCH 40 PVC
1/2" - 1 1/4"	2"
1 1/2"	2 1/2"

SCALE 1" = 20'-0"

Plans Prepared By:
Mark Von Wodtke, ASLA
Reg. L.A. 1537
Date Prepared: 12-23-92

Claremont Environmental Design Group, Inc.
480 North Indian Hill Boulevard, Claremont, CA 91711
909-625-3916

Approved by:

Approved by: 4/29/93
Public Utilities Electric

MARK	REVISIONS	APPR.	DATE

DESIGNED BY ____ DRAWN BY ____ CHECKED BY ____

CITY OF RIVERSIDE
PUBLIC WORKS DEPARTMENT

APPROVED BY	DATE	BY
PRINCIPAL ENGINEER	4/29/93	
PARK DEPARTMENT	4/28/93	
TRAFFIC DIVISION		
CHIEF P.W. ENGINEER		
SENIOR ENG.	4/29/93	

APPROVED BY
PUBLIC WORKS DIRECTOR
DATE 4/29/93

PENNSYLVANIA AVENUE WIDENING

Median Irrigation Plans

HORIZ. SCALE: 1" = 20' VERT. SCALE: 1" = 20'

ACCOUNT NO.
R-3057
SHEET IR1 OF 5

PC 3423-M

INDEXED 7-7-93 GH

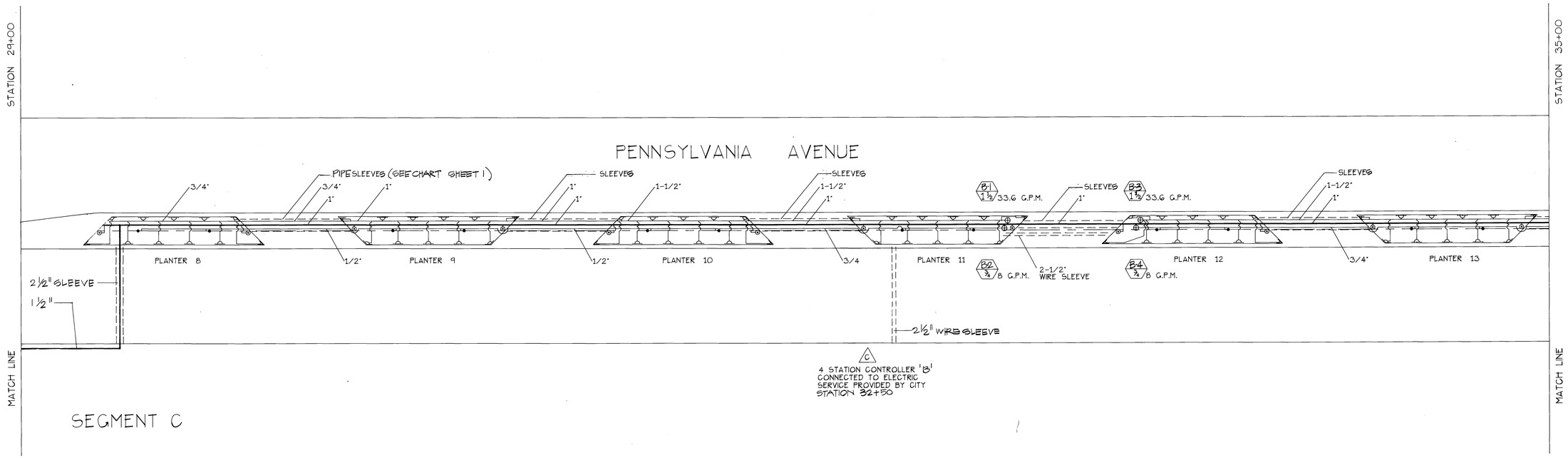

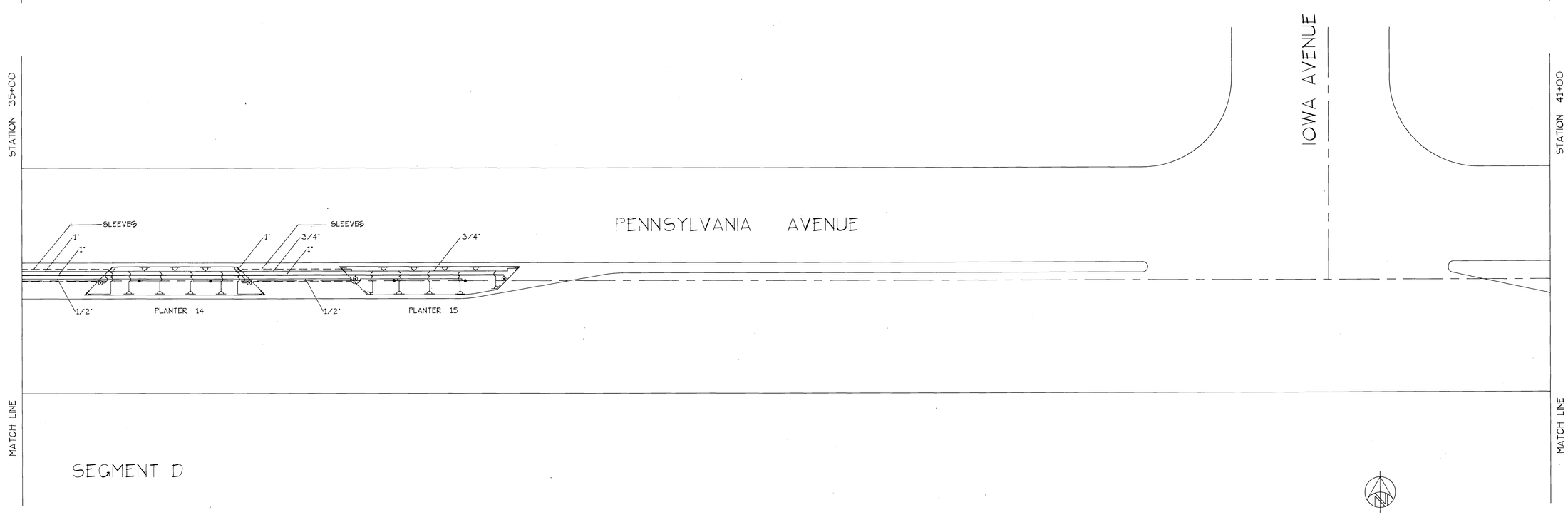

Plans Prepared By:
Mark Von Wodtke, ASLA
Reg. L.A. 1537
Date Prepared: 12-23-92

Claremont Environmental Design Group, Inc.
480 North Indian Hill Boulevard, Claremont, CA 91711
909-625-3916

Approved by:

Approved by: 4/29/93
Public Utilities Electric

MARK	REVISIONS	APPR.	DATE

DESIGNED BY ____ DRAWN BY ____ CHECKED BY ____

CITY OF RIVERSIDE
PUBLIC WORKS DEPARTMENT

APPROVED BY	DATE	BY
PRINCIPAL ENGINEER	4/29/93	
PARK DEPARTMENT	4-28-93	
TRAFFIC DIVISION		
CHIEF P. W. ENGINEER		
SENIOR ENGR.	4/29/93	

APPROVED BY
PUBLIC WORKS DIRECTOR
DATE 4/29/93

PENNSYLVANIA AVENUE WIDENING

Median Irrigation Plans

HORIZ. SCALE: 1" = 20' VERT. SCALE: 1" = 20'

ACCOUNT NO.
R-3057
SHEET IR2 OF 5

PC 3423-M

INDEXED 7-7-94

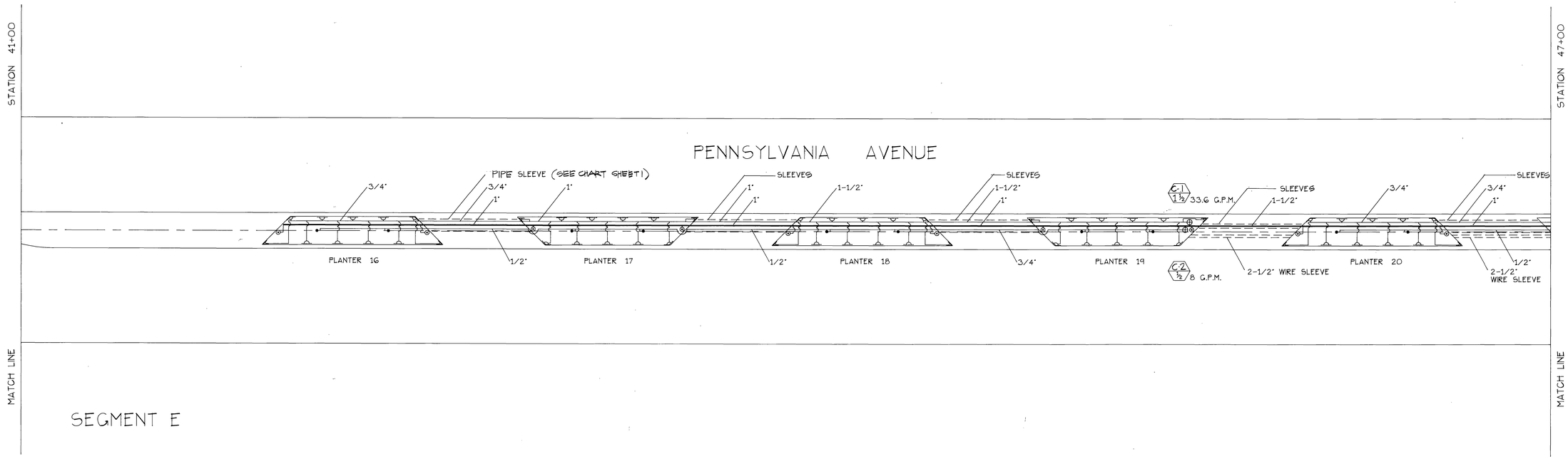

SEGMENT E

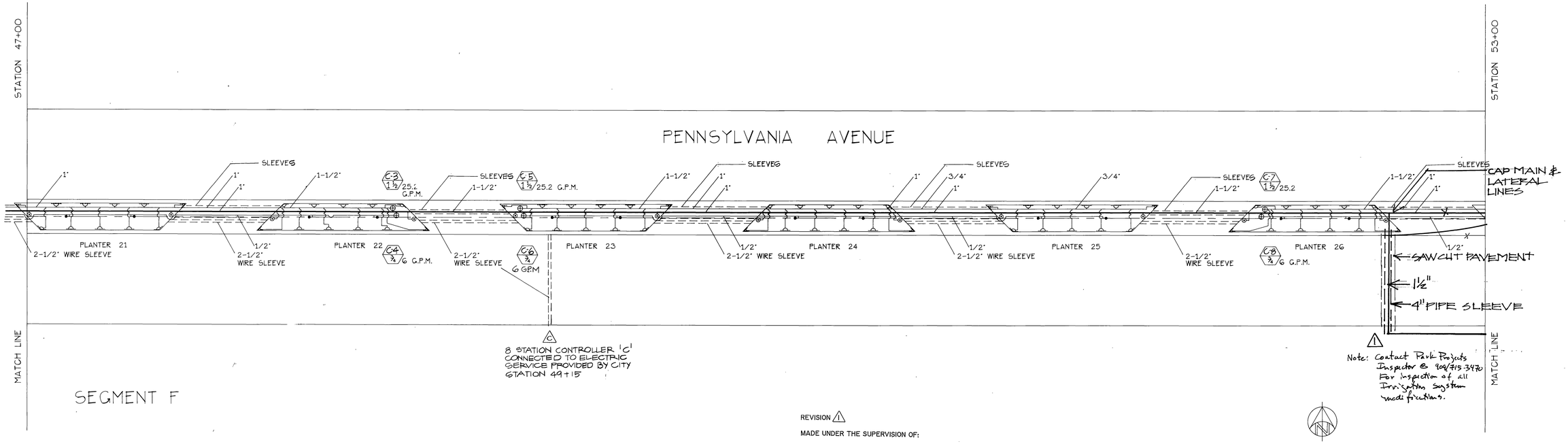

SEGMENT F

REVISION 1

MADE UNDER THE SUPERVISION OF:

I.D.L.A.
4160 CHESTNUT STREET
RIVERSIDE, CA 92501 (909) 683-4352

IAN L. DAVIDSON RLA 2651 EXP. 6-30-01

SCALE 1" = 20'-0"

Plans Prepared By:
Mark Von Wodtke, ASLA
Reg. L.A. 1537
Date Prepared: 12-23-92

Claremont Environmental Design Group, Inc.
480 North Indian Hill Boulevard, Claremont, CA 91711
909-625-3916

Approved by:

Approved by: 4/29/93
Public Utilities Electric

MARK	REVISIONS	APPR.	DATE
1	LT. THEN POCKET	PB	02/05/01

DESIGNED BY ____ DRAWN BY ____ CHECKED BY ____

CITY OF RIVERSIDE
PUBLIC WORKS DEPARTMENT

APPROVED BY	DATE	BY
PRINCIPAL ENGINEER	4/29/93	SG
PARK DEPARTMENT	4/29/93	[illegible]
TRAFFIC DIVISION		
CHIEF P. W. ENGINEER		
SENIOR ENGR.	4/29/93	BU.

APPROVED BY
PUBLIC WORKS DIRECTOR
DATE 4/29/93

PENNSYLVANIA AVENUE WIDENING

Median Irrigation Plans

HORIZ. SCALE: 1" = 20' VERT. SCALE: 1" = 20'

ACCOUNT NO. R-3057

SHEET IR3 OF 5

PC 3423-M

INDEXED 7-7-94 [illegible]

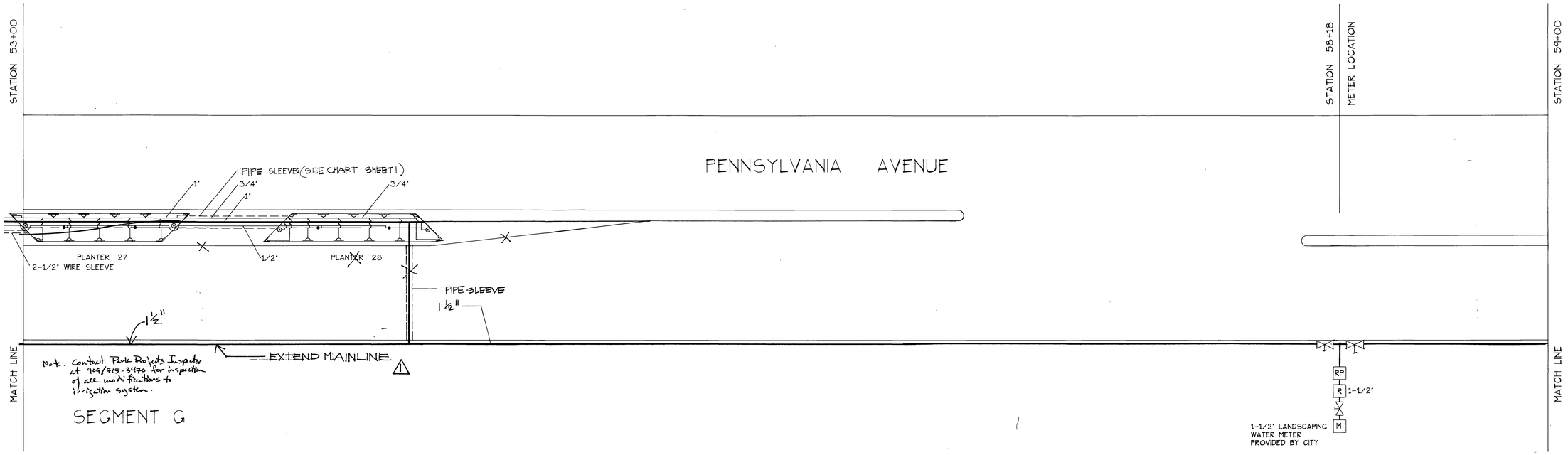

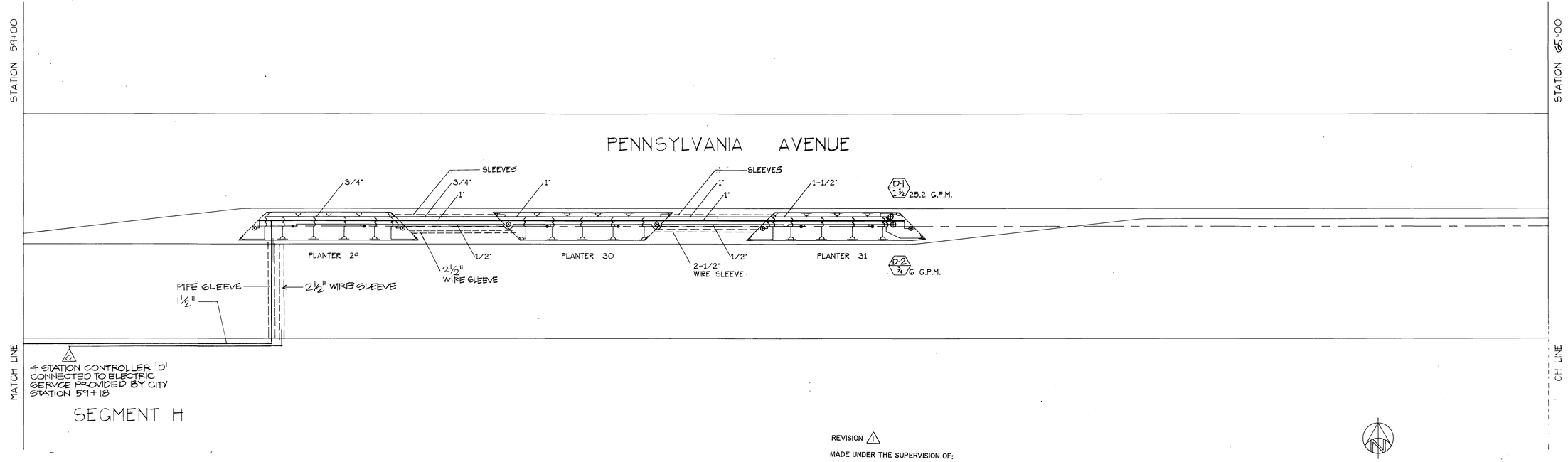

REVISION 1

MADE UNDER THE SUPERVISION OF:

I.D.L.A.
4160 CHESTNUT STREET
RIVERSIDE, CA 92501 (909) 683-4352

IAN J DAVIDSON RLA 2651 EXP. 6-30-01

0 20' 40' 60'
SCALE 1" = 20'-0"

Plans Prepared By:
Mark Von Wodtke, ASLA
Reg. L.A. 1537
Date Prepared: 12-23-92

Claremont Environmental Design Group, Inc.
480 North Indian Hill Boulevard, Claremont, CA 91711
909-625-3916

Approved by:

Approved by: 4/29/93
Public Utilities Electric

MARK	REVISIONS	APPR.	DATE
1	LT. TURN POCKET	RS	02/05/01

DESIGNED BY ____ DRAWN BY ____ CHECKED BY ____

CITY OF RIVERSIDE
PUBLIC WORKS DEPARTMENT

APPROVED BY	DATE	BY
PRINCIPAL ENGINEER	4/29/93	
PARK DEPARTMENT	4-29-93	
TRAFFIC DIVISION		
CHIEF P. W. ENGINEER		
SENIOR ENGR.	4/29/93	E.U.

APPROVED BY
PUBLIC WORKS DIRECTOR
DATE 4/29/93

PENNSYLVANIA AVENUE WIDENING

Median Irrigation Plans

HORIZ. SCALE: 1" = 20' VERT. SCALE: 1" = 20'

ACCOUNT NO. R-3057

SHEET IR4 OF 5

PC 3423-M

INDEXED 7-7-99 GH

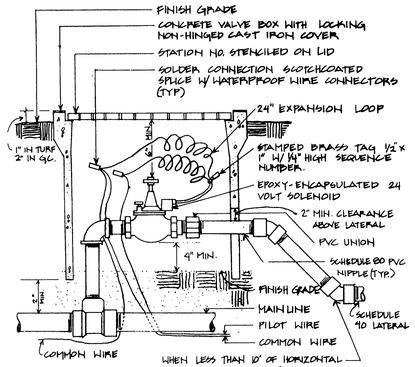

NOTES:
1) EACH VALVE SHALL HAVE ITS OWN TEE OR ELL CONNECTION TO THE MAINLINE. NO MANIFOLD CONNECTIONS
2) PROVIDE MINIMUM 3' CLEAR DISTANCE BETWEEN VALVES.
3) INSTALL VALVE BOX IN A MANNER THAT BOX DOES NOT REST ON ANY IRRIGATION LINE.

NO SCALE

1 REMOTE CONTROL VALVE
N.T.S.

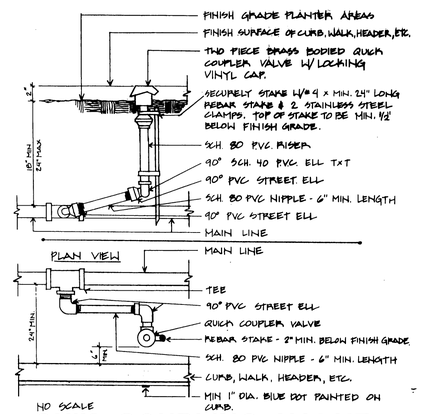

NO SCALE

2 QUIK COUPLING VALVE
N.T.S.

NOTES:
1) INSTALL BACKFLOW DEVICE SQUARE WITH HARDSCAPE ELEMENT AS APPROVED BY THE PARK PROJECTS INSPECTOR IN THE FIELD.
2) MODIFY HANDWHEELS AS DIRECTED OR REMOVE & TURN OVER TO PARK PROJECTS INSPECTOR AT FINAL INSPECTION.

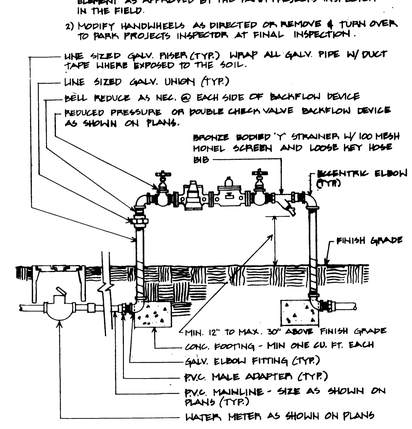

3 BACKFLOW PREVENT. UNIT
N.T.S.

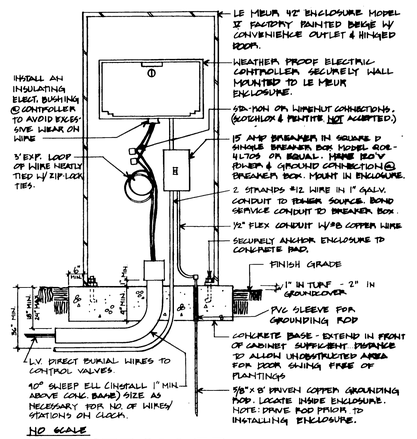

NO SCALE

4 CONTROLLER
N.T.S.

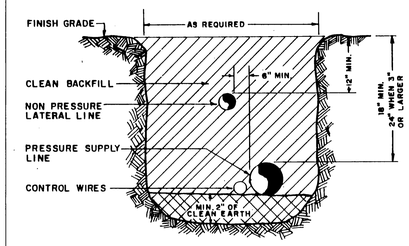

NOTES:
1. BELOW PAVED AREAS A MINIMUM OF 6" LAYER OF CLEAN FILL SAND SHALL BE INSTALLED ABOVE AND BELOW PIPING.
2. WHEN USING RECLAIMED WATER, MAINTAIN MINIMUM 10' HORIZONTAL SEPARATION BETWEEN POTABLE AND RECLAIMED PRESSURE LINES. WHERE LINES CROSS, PROVIDE PVC. SLEEVE FOR POTABLE LINE MIN. 5' EACH SIDE OF RECLAIMED LINE.

5 TYPICAL TRENCHING
N.T.S.

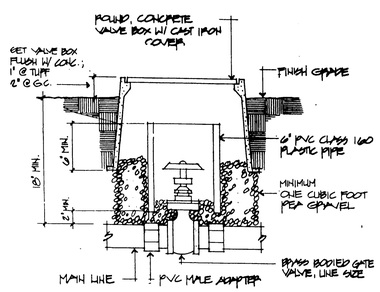

NO SCALE

6 GATE VALVE
N.T.S.

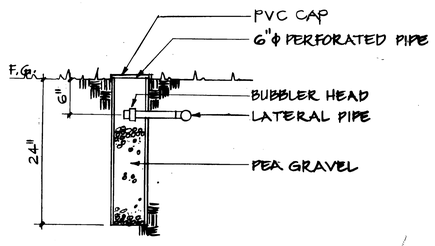

7 TREE BUBBLER
N.T.S.

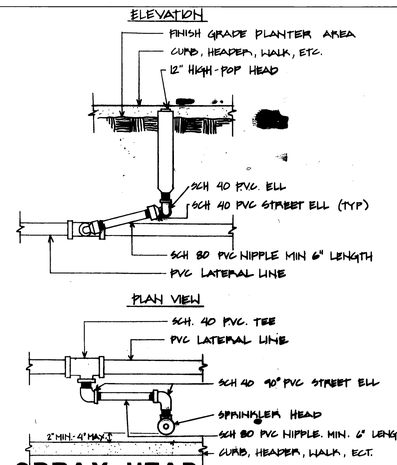

8 SPRAY HEAD
N.T.S.

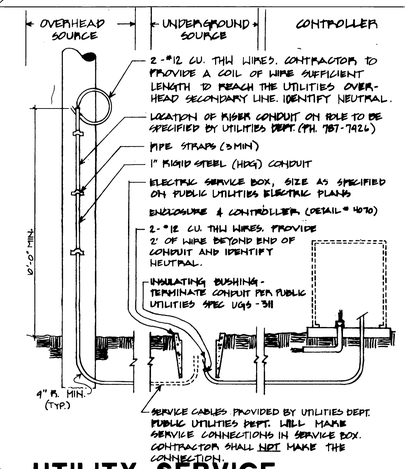

9 UTILITY SERVICE
N.T.S.

GENERAL LEGEND

SYMBOL	DESCRIPTION	MANUFACTURER + PART NO.	REFERENCE
⊕	REMOTE CONTROL VALVE. SIZE INDICATED CONCRETE. NON-HINGED LOCKING VALVE BOX	RAINBIRD EFB SERIES	DETAIL 1
RP	BACKFLOW PREVENTION UNIT. SIZE INDICATED	FEBCO 825Y SERIES	DETAIL 3
R	PRESSURE REDUCING VALVE. 1-1/2"	WILKINS 500	
	GATE VALVE. PIPE SIZE	NIBCO T-113	
⊙	QUICK COUPLING VALVE	RAINBIRD 44 LRC	DETAIL 2
C	AUTOMATIC CONTROLLER NUMBER OF STATIONS INDICATED	SOLID STATE CONTROLLER PEDESTAL-MOUNTED, COMERCIAL GRADE, METAL CABINET	DETAIL 4
M	NEW IRRIGATION METER	PROVIDED BY CITY	
━━━	SUPPLY LINE. SIZE INDICATED	PVC SCHEDULE 40	SPECIFICATIONS
———	NON-PRESSURE LINE. SIZE INDICATED	PVC CLASS 200	SPECIFICATIONS
=======	DENOTES SLEEVE. SIZE INDICATED	PVC SCHEDULE 40	SPECIFICATIONS

SPRINKLER HEAD LEGEND

SYMBOL	DESCRIPTION	MANUFACTURER + PART NO.	GPM	RAD	PSI	ARC
	HALF CIRCLE SPRAY HEAD	RAINBIRD 1812 W/ SAM VALVE	0.9	12'	25	180°
	VARIABLE ARC SPRAY HEAD	RAINBIRD 1812 W/ SAM VALVE	VARIES	TO 15'	25	VARIES
	BUBBLER	RAINBIRD 1300A-F	1.0	5'	25	360°

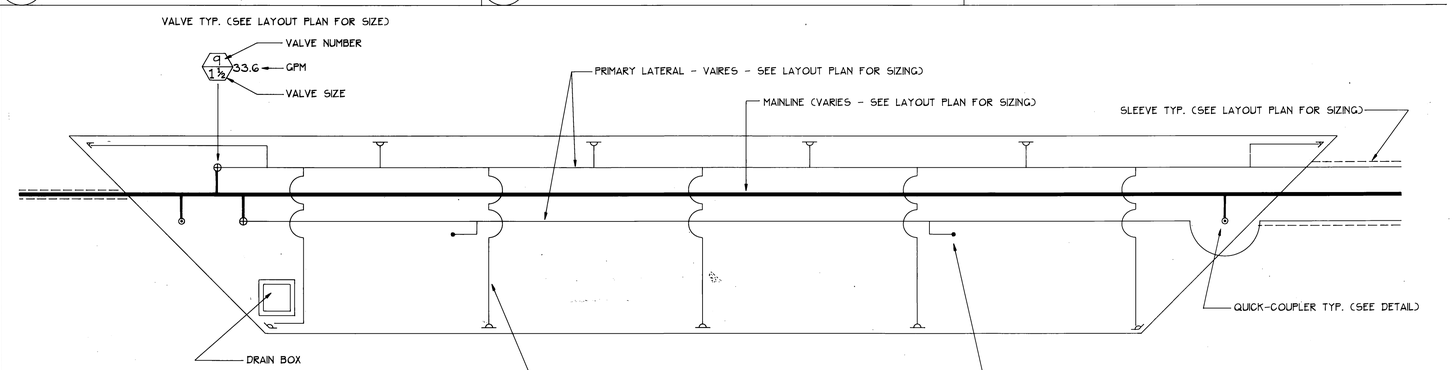

10 TYPICAL PLANTER
SCALE 1/4" = 1'-0"

Plans Prepared By:
Mark Von Wodtke, ASLA
Reg. L.A. 1537
Date Prepared: 12-23-92

Claremont Environmental Design Group, Inc.
480 North Indian Hill Boulevard, Claremont, CA 91711
909-625-3916

Approved by:

Approved by: 4/29/93
Public Utilities Electric

MARK	REVISIONS	APPR.	DATE

DESIGNED BY ____ DRAWN BY ____ CHECKED BY ____

CITY OF RIVERSIDE
PUBLIC WORKS DEPARTMENT

APPROVED BY	DATE	BY
PRINCIPAL ENGINEER	4/29/93	
PARK DEPARTMENT	4/29/93	
TRAFFIC DIVISION		
CHIEF P. W. ENGINEER		
SENIOR ENGR.	4/29/93	

APPROVED BY
PUBLIC WORKS DIRECTOR
DATE 4/29/93

PENNSYLVANIA AVENUE WIDENING

Median Irrigation Plans

HORIZ. SCALE: 1" =
VERT. SCALE: 1" =

ACCOUNT NO.
R-3057
SHEET 1R5 OF 5

PC 3423-M

INDEXED 7-7-94 GH