# TRACT 22653 PHASE 4
# STREET IMPROVEMENT PLANS

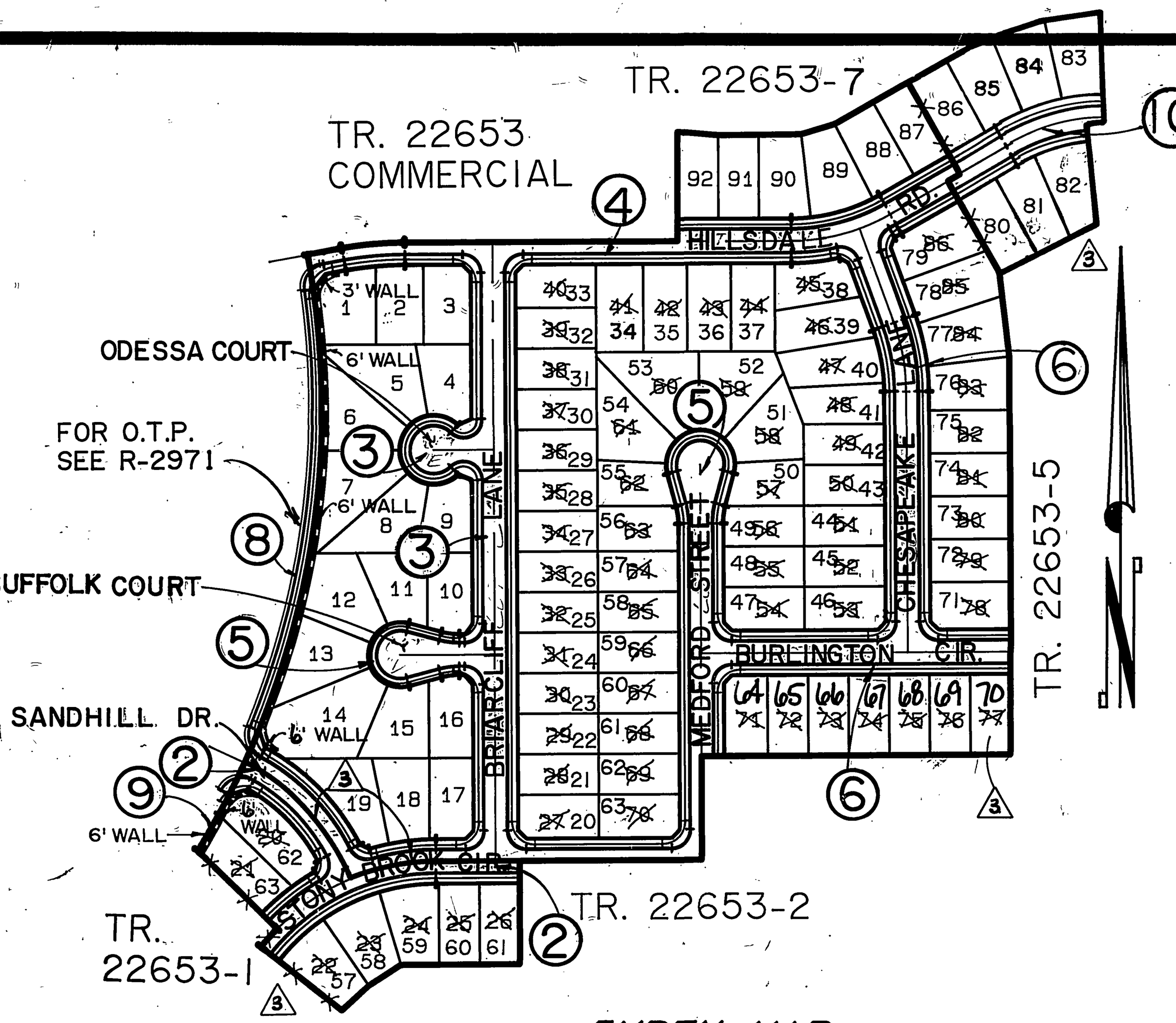


## INDEX MAP
SCALE: 1" = 200'

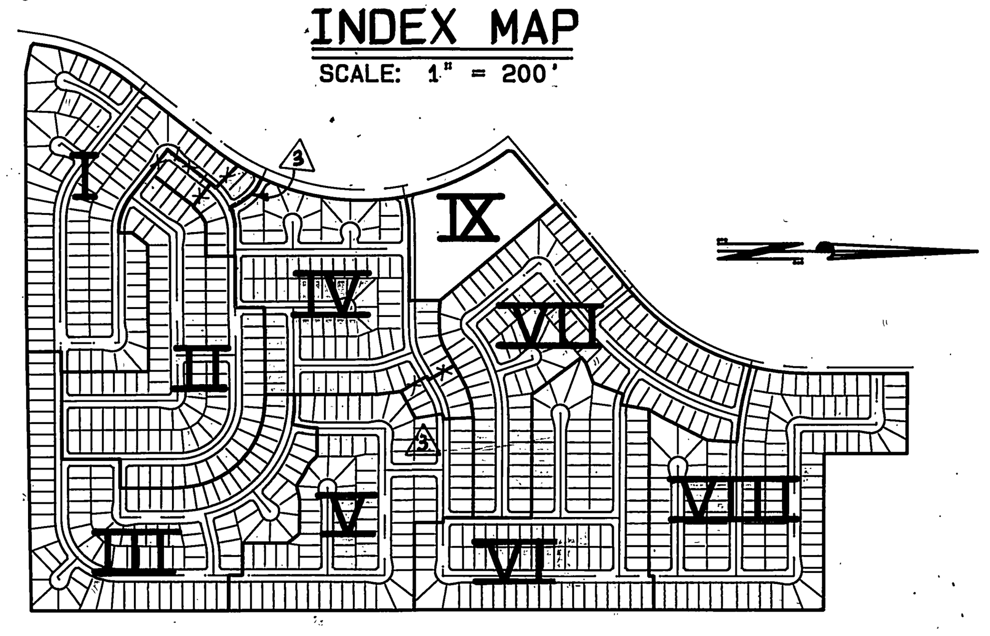

## PHASING MAP
SCALE: 1" = 800'

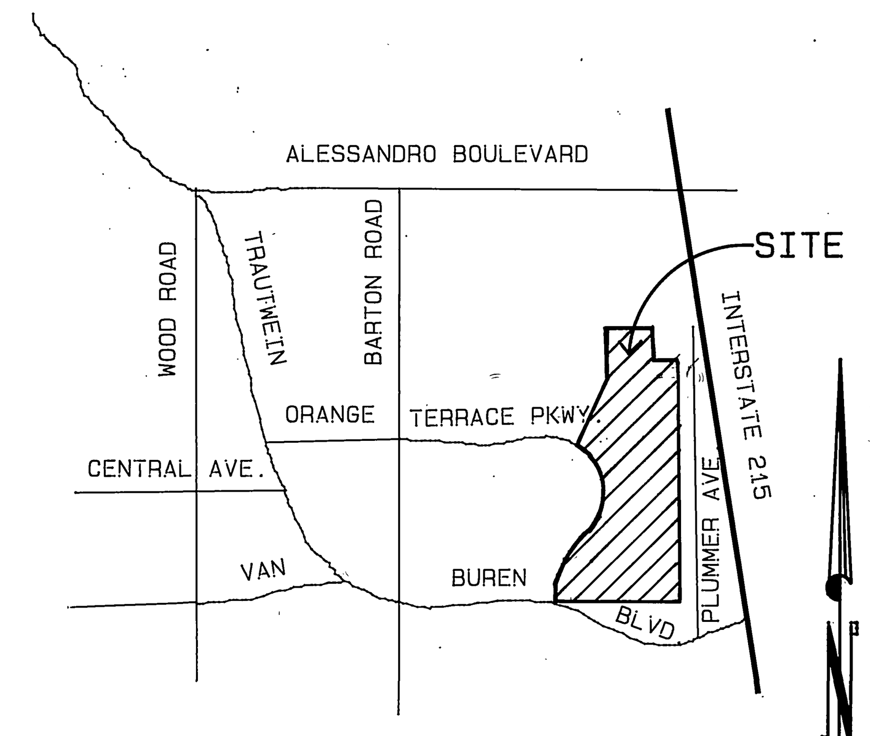


## VICINITY MAP
N.T.S.

## STREET SIGN SCHEDULE

| | | |
|---|---|---|
| A | ORANGE TERRACE PKWY. / SANDHILL DRIVE | 8700 / 8700 |
| B | ~~SANDHILL DRIVE / STONY BROOK CIRCLE~~ (3) | ~~8700 / 20600~~ |
| C | STONY BROOK CIRCLE / BRIARCLIFF LANE | 20600 / 8700 |
| D | BRIARCLIFF LANE / SUFFOLK COURT | 8700 / 20600 |
| E | BRIARCLIFF LANE / ODESSA COURT | 8700 / 20600 |
| F | STONY BROOK CIRCLE / MEDFORD STREET | 20700 / 8700 |
| G | MEDFORD STREET / BURLINGTON CIRCLE | 8700 / 20700 |
| H | BURLINGTON CIRCLE / CHESAPEAKE LANE | 20700 / 8700 |
| I | CHESAPEAKE LANE / HILLSDALE ROAD | 8700 / 20700 |
| J | BRIARCLIFF LANE / HILLSDALE ROAD | 8700 / 20700 |
| K | ORANGE TERRACE PKWY. / HILLSDALE ROAD | 8600 / 20600 |
| S | 30" R-1 ( STOP SIGN ) | |

INSTALL PER CITY OF RIVERSIDE STANDARDS No. 662A & 666.

## PAVEMENT SECTION TABLE (2)

| STREET | T.I. | "R" VALUE | A.C. | C.A.B. |
|---|---|---|---|---|
| STONY BROOK CIR 18+52 TO 21+23 | 5.0 | 66 | 2.5" | 4.0" |
| SANDHILL DR. | 5.0 | 66 | 2.5" | 4.0" |
| BRIARCLIFF LN. | 5.0 | 66 | 2.5" | 4.0" |
| BURLINGTON CIR. | 5.0 | 52 | 2.5" | 4.0" |
| CHESAPEAKE LN. | 5.0 | 56 | 2.5" | 4.0" |
| MEDFORD ST. | 5.0 | 52 | 2.5" | 4.0" |
| HILLSDALE RD. 0+00 TO 4+82 | 5.0 | 66 | 2.5" | 4.0" |
| HILLSDALE RD. 4+82 TO 12+70 | 5.0 | 52 | 2.5" | 4.0" |

PER SR 1495

## GENERAL NOTES

1. It shall be the responsibility of the contractor to clear the right of way in accordance with the provisions of law as it affects each utility including irrigation lines and appurtenances and at no cost to the City.
2. Construction shall be in accordance with the City of Riverside Dept. of Public Works, Standard Drawings, Std. Dwg. No. 10, and the Standard Specifications for Public Works Construction, Current Edition.
3. Trim edge of existing pavement where new pavement joins to a smooth, straight line. Construct match-up paving as shown on plan and overlay paving as directed in the field to produce a smooth section.
4. Construct driveway approaches per Std. Dwg. 302. Exact size and location to be determined at the time of construction as approved by the Traffic Engineer.
5. The subdivider shall arrange for a soil test to be made by a soils engineer after the streets have been prepared to rough grade and prior to curb and gutter construction. Depth of base material & A.C. paving shall be determined by the City of Riverside design standards and test procedures.
6. All flagged elevations shall be staked in the field by the private engineer.
7. The private engineer signing these plans is responsible for assuring the accuracy and acceptability of the work hereon. In the event of discrepancies arising during construction, the private engineer shall be responsible for determining an acceptable solution and revising the plans for approval by the City.
8. The developer shall be responsible for preserving or re-establishing and referencing survey monuments destroyed, disturbed or buried as a result of construction shown hereon.
9. On all areas within public right of way where the fill is one (1) foot or greater, a letter will be required from the soils engineeer, certifying the compaction of the fill below subgrade, prior to issuance of the Construction Permit/Cut Sheets.
10. All traffic signs shall be installed prior to opening the streets to traffic.
11. See "Street Lighting Plans" for quantity and location of required street lights.
12. Notice to contractor. The existence and location of any underground utility pipes or structures shown on these plans were obtained by a search of the available records. To the best of our knowledge there are no existing utilities except as shown on these plans. The contractor is required to take precautionary measures to protect the utility lines shown and any other lines not of record or not shown on these plans.
13. Contractor agrees that he shall assume sole and complete responsibility for job site conditions during the course of construction of this project, including safety of all persons and property; that this requirement shall apply continuously and not be limited to normal working hours; and that the contractor shall defend, indemnify and hold the owner and the engineer harmless from any and all liability, real or alleged, in connection with the performance of work on this project, excepting for liability arising from the sole negligence of the owner or engineer.
14. Any traffic control striping obliterated and/or badly worn during construction shall be restored by the contractor within five days after notification from the City Inspectors.
15. The contractor shall call in a location request to Underground Service Alert (USA), Phone No. 1-800-422-4133, two working days before digging. No construction permit will be issued by the Public Works Department involving excavation or underground facilities unless the applicant has been provided an inquiry identification number by U.S.A.
16. Quantities shown are for information only and the City of Riverside is not responsible for their accuracy.
17. The developer shall give WMWD five (5) working days written notice prior to the start of construction and to allow WMWD ten (10) working days for completion of work. Phone : 780-4170
18. Final striping for traffic control and/or pavement marking to be the responsibility of the developer.

## PARKS AND RECREATION NOTES

1. All related work shall conform to the City of Riverside, Park and Recreation Department Standards.
2. Contact the street tree inspector a minimum of 48 hours in advance at 315-6162 to schedule inspections. Inspections shall be required: A) When plant locations have been spotted in the field prior to digging plant pits, B) While digging plant pits and planting/relocating trees, C) After planting and all other indicated or specified work has been completed for start of maintenance, and D) At end of maintenance/field acceptance (developer will be released from maintenance only upon receipt of written notification from the City that the Park and Recreation Department is assuming maintenance responsibilities).
3. Street trees shall be planted prior to occupancy.
4. The developer shall maintain all plantings for a minimum period of one year.
5. Park & Recreation / Public Works Department permits are required prior to commencement of tree relocation and/or removal of work. For all trees within the ultimate pavement area, backfill of all holes is to be inspected by the City for proper compaction.
6. Street tree planting shall be as follows:

| Street Names | Botanical Name/Common Name | Min. Size | Approx. Spacing | No. Req. |
|---|---|---|---|---|
| SAND HILL DRIVE | Cinnamonum Camphora / Camphor | 15 gal. | 45' | ~~X~~ 4 (3) |
| STONY BROOK CIRCLE | Liquidambar Styraciflua / Sweetgum | 15 gal. | 45' | ~~17~~ 7 |
| BRIARCLIFF LANE | Cinnamonum Camphora / Camphor | 15 gal. | 45' | 30 |
| SUFFOLK COURT | Lagerstroemia Indica / Crape Myrtle | 15 gal. | 45' | 7 |
| ODESSA COURT | Lagerstroemia Indica / Crape Myrtle | 15 gal. | 45' | 5 |
| MEDFORD STREET | Cinnamonum Camphora / Camphor | 15 gal. | 45' | 22 |
| BURLINGTON CIRCLE | Liquidambar Styraciflua / Sweetgum | 15 gal. | 45' | 15 |
| CHESAPEAKE LANE | Cinnamonum Camphora / Camphor | 15 gal. | 45' | 24 |
| HILLSDALE ROAD | Jacaranda Mimosifolia / Jacaranda | 15 gal. | 45 | ~~25~~ 47 (3) |

ORANGE TERRACE PKWY SEE REVERSE FRONTAGE LANDSCAPE PLAN, PC 2910 R PREPARED BY ELLIOTT/MALONEY LANDSCAPE ARCHITECT, PHONE NO. 369-0700 .

7. Park and Recreation Department and Public Works Department permits are required prior to commencement of tree relocation and/or removal work. For all trees within the ultimate pavement area, backfill of all holes is to be inspected by the City for proper compaction.

*NOTE: In the interest of public safety and maintenance, the Street Tree Inspector shall have the authority to revise street numbers and locations as shown on approved plans.

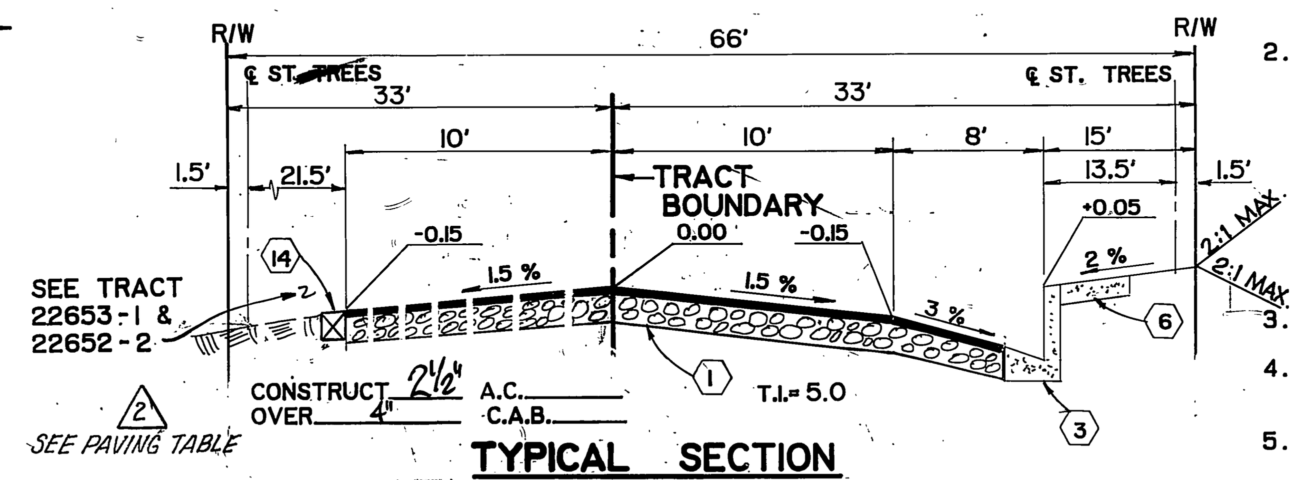


## TYPICAL SECTION
HILLSDALE ROAD STA. 0+09.00 TO STA. 6+06.74
STONY BROOK CIRCLE STA. 15+80.94 TO STA. 18+51.50
NTS

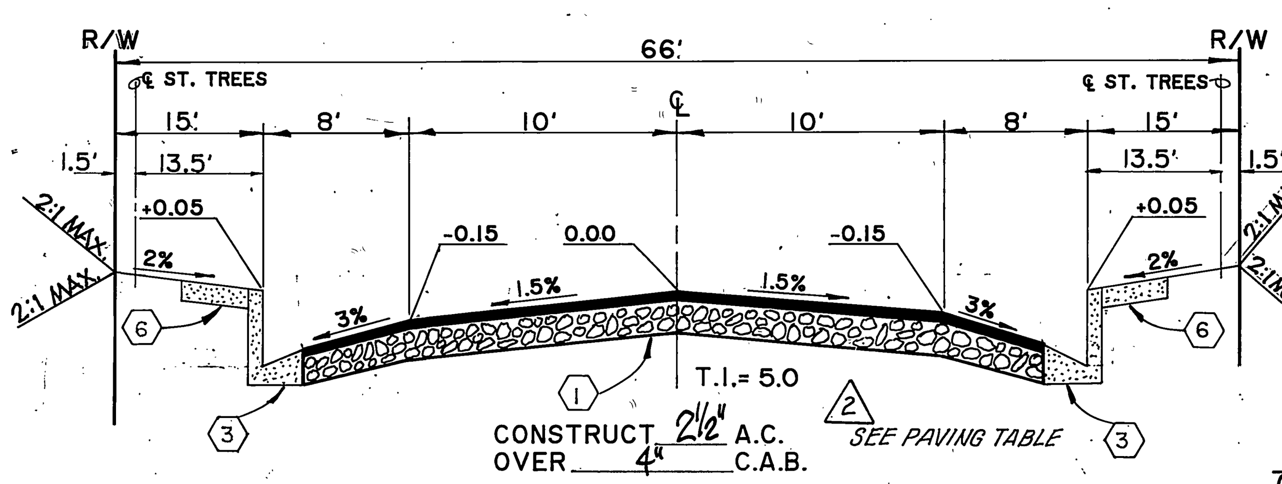


## TYPICAL SECTION
NTS
SANDHILL DRIVE
BRIARCLIFF LANE
MEDFORD STREET
BURLINGTON CIRCLE
CHESAPEAKE LANE
HILLSDALE ROAD STA. 6+06.74 TO STA. 10+26.30
STONY BROOK CIR. STA. 18+51.50 TO STA.22+37.43

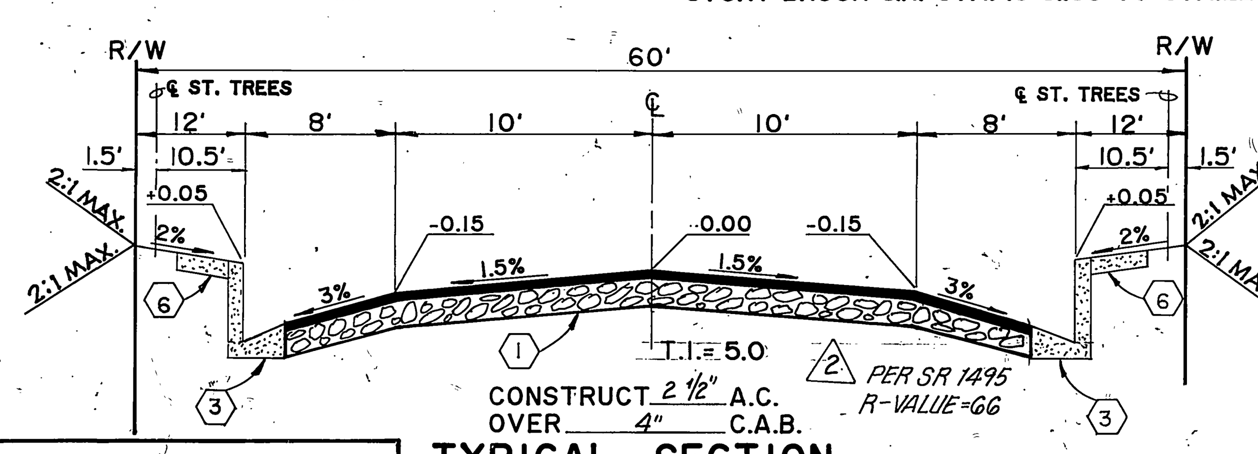


**CENCOM CABLE T.V.**

APPROVED [signature] DATE 1-31-90

## TYPICAL SECTION
NTS
SUFFOLK COURT
ODESSA COURT

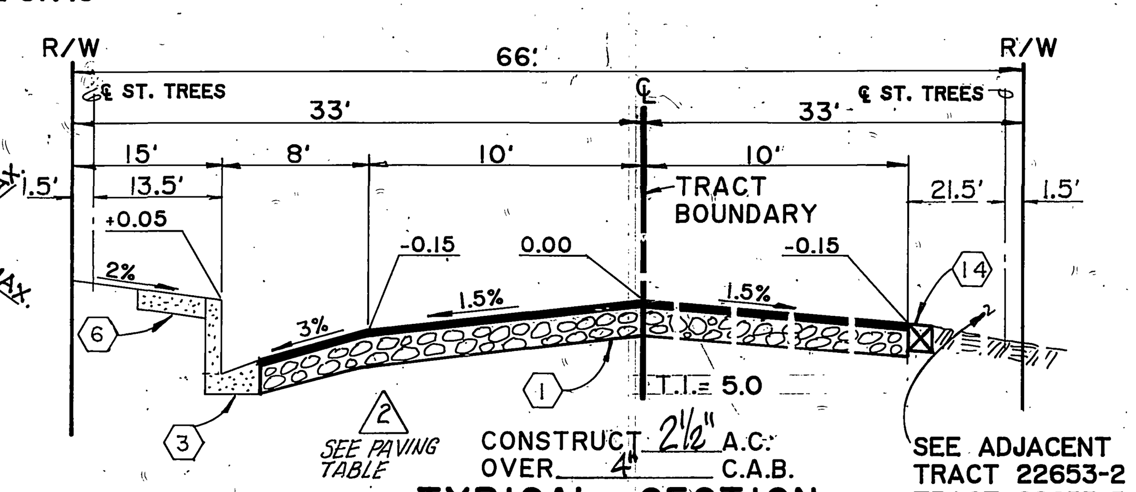


## TYPICAL SECTION
NTS
HILLSDALE ROAD STA. 10+26.30 TO STA. 10+47.19
STONY BROOK CIRCLE STA. 22+37.43 TO STA. 22+73.7
MEDFORD STREET STA. 0+00.00 TO STA. 1+53.00.

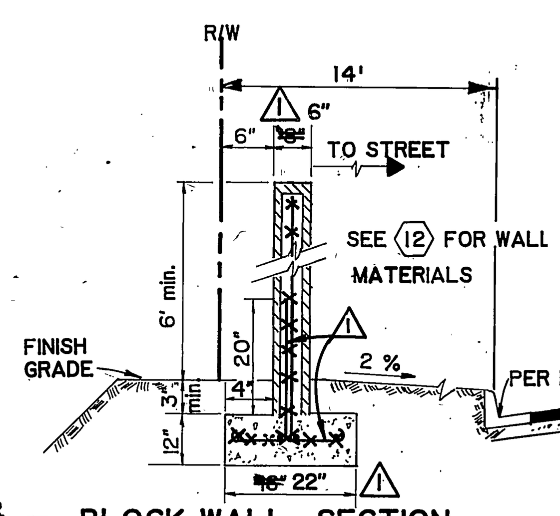


(12) BLOCK WALL SECTION
TYPICAL ORANGE TERRACE PKWY.
SEE SHEET 7 FOR DETAILS
N.T.S.

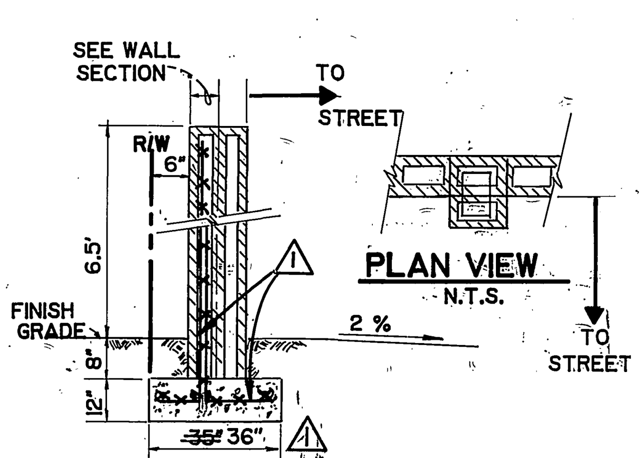


(12) PILASTER DETAIL
N.T.S.
SEE SHEET 7 FOR DETAILS

## CONSTRUCTION NOTES

(1) Place A.C. paving over aggregate base per typical section.

(3) Construct curb and gutter per City of Riverside Standard Drawing No. 200 type I (6" curb face).

(4) Construct PCC cross gutter per City of Riverside Standard Drawing Number 220.

(5) Construct wheelchair ramp per City of Riverside Standard Drawing No. 304

(6) Construct PCC curb sidewalk per City of Riverside Standard Dwg. No. 325.

(7) Construct barricade per City of Riverside Standard Dwg No. 180.

(8) Remove existing berm.

(9) Plant street trees to the specifications of the Parks and Recreation Department.

(10) Paint 12" solid white stop bar, 8" stop legend.

(11) Remove existing barricade.

(12) Construct 6' high block wall per City of Riverside Standard Number 704 as follows: ~~(SEE SHEET 7 FOR DETAILS)~~ (1)
Inspection and permit required from Public Works Engineering Division.
(SEE DETAILS THIS SHEET AND SHEET No. 7) (1)

(13) Construct 20' long x 2' wide x 2 1/2" thick A.C. drainage aprons.

(14) Construct 2" x 4" redwood header.

(15) Construct 3' high block wall per City of Riverside Std. 704. Inspection and permit required from Public Works ( see sheet 6 for details )

PC 2910-S

**Underground Service Alert** Call: TOLL FREE 1-800 422-4133
CALL BEFORE YOU DIG
TWO WORKING DAYS BEFORE YOU DIG

*PRIVATE ENGINEERING NOTE*
*CONSTRUCTION CONTRACTOR AGREES THAT IN ACCORDANCE WITH GENERALLY ACCEPTED CONSTRUCTION PRACTICES, CONSTRUCTION CONTRACTOR WILL BE REQUIRED TO ASSUME SOLE AND COMPLETE RESPONSIBILITY FOR JOB SITE CONDITIONS DURING THE COURSE OF CONSTRUCTION OF THE PROJECT, INCLUDING SAFETY OF ALL PERSONS AND PROPERTY; THAT THIS REQUIREMENT SHALL BE MADE TO APPLY CONTINUOUSLY AND NOT BE LIMITED TO NORMAL WORKING HOURS, AND CONSTRUCTION CONTRACTOR FURTHER AGREES TO DEFEND, INDEMNIFY AND HOLD DESIGN PROFESSIONAL HARMLESS FROM ANY AND ALL LIABILITY, REAL OR ALLEGED, IN CONNECTION WITH THE PERFORMANCE OF WORK ON THIS PROJECT, EXCEPTING LIABILITY ARISING FROM THE SOLE NEGLIGENCE OF DESIGN PROFESSIONAL*

REGISTERED PROFESSIONAL ENGINEER JOHN W. CANTY No. 17550 Exp. 6/30/93 CIVIL STATE OF CALIFORNIA

PREPARED UNDER THE DIRECTION OF: [signature]
REGISTERED CIVIL ENGINEER NO. 17550
EXPIRATION DATE 6/30/93 DATE: 6/15/89
APPROVED BY:

**J.F. DAVIDSON ASSOCIATES, INC.**
CIVIL ENGINEERS • SURVEYORS • PLANNERS
P.O. BOX 493 RIVERSIDE, CA 92502 (714) 686-0844
11200 SO. MT. VERNON AVE. #D COLTON, CA 92324 (714) 825-1082
73-080 EL PASEO, #103 PALM DESERT, CA 92260 (619) 346-5691
JFD ASSOCIATES

SCALE AS SHOWN
DATE JUNE 1989

BENCH MARK: V.B. 10-64 ELEV. 1700.670 DATE: 1971 BRASS DISK FLUSH & MARKED V.B. 10-64, 0.6 MI. E. ON VAN BUREN BLVD. FROM CL INT. OF VAN BUREN & WOOD RD., 205' N. OF VAN BUREN @ THE N.E. SIDE OF GRANITE BOULDERS, ON TOP OF 3'x15'x18' BOULDER

| MARK | REVISIONS | | APPR. | DATE |
|---|---|---|---|---|
| 3 | REVISED PHASE BDRY. & LOT #'S. | | MC | 9/13/95 |
| 2 | ADDED PAVING SECTIONS PER SR 1495 | | MC | 9/13/95 |
| 1 | REVISED FREESTANDING WALL DETAILS | | MC | 4/28/91 |

DESIGNED BY M.K. DRAWN BY M.K. CHECKED BY J.F.

CITY OF RIVERSIDE, CALIFORNIA
DEPARTMENT OF PUBLIC WORKS

| APPROVED BY | BY | DATE |
|---|---|---|
| PRINCIPAL ENGINEER | [initials] | 11/9/90 |
| PARK DEPARTMENT | MA | 5/10/90 |
| TRAFFIC DIVISION | [initials] | 11/6/90 |
| CHIEF P.W. ENGR. | [initials] | 11/16/90 |
| PLANNING | [initials] | 10/13/90 |

APPROVED BY [signature] DIRECTOR OF PUBLIC WORKS
DATE 11/21/90

TRACT 22653-4
STREET IMPROVEMENT PLANS
TITLE SHEET
S I C

PROJECT NO
R-3110
SHEET 1 OF 10
FILE NO 8911168

INDEXED 12-12-90

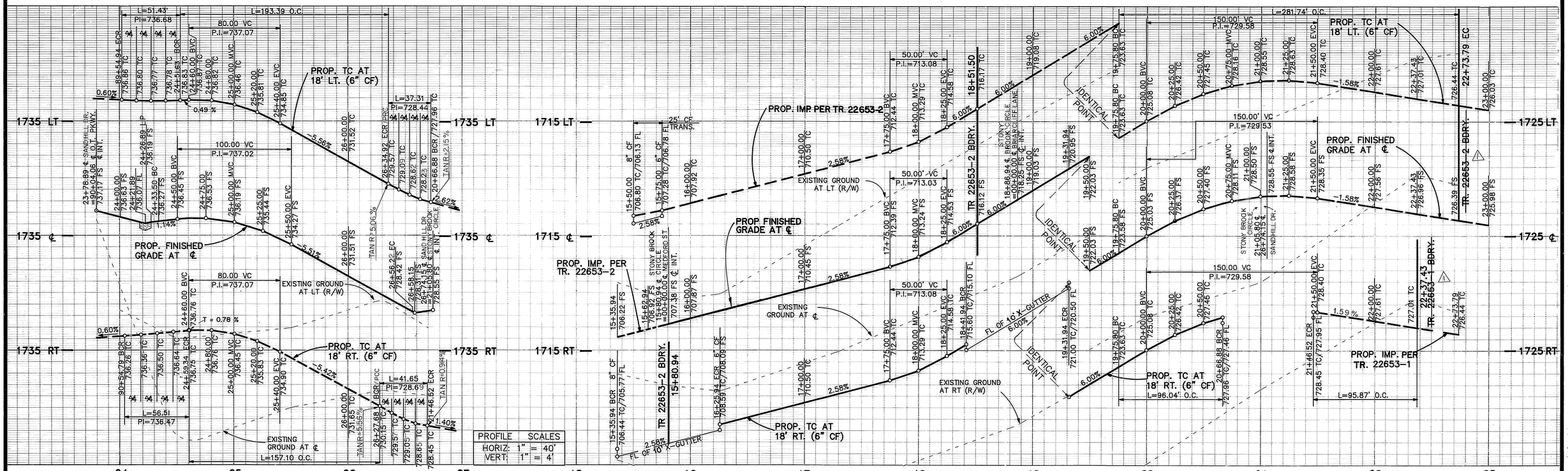


| CURVE DATA | | | | |
|---|---|---|---|---|
| No. | Δ | R | L | T |
| (1) | 34°50'41" | 318.00' | 193.39' | 99.79' |
| (2) | 42°32'09" | 300.00' | 222.72' | 116.77' |
| (3) | 31°55'06" | 282.00' | 157.10' | 80.64' |
| (4) | 88°22'47" | 27.00' | 41.65' | 26.25' |
| (5) | 79°10'32" | 27.00' | 37.31' | 22.33' |
| (6) | 90°00'00" | 27.00' | 42.41' | 27.00' |
| (7) | 51°44'17" | 312.00' | 281.74' | 151.29' |
| (8) | 45°25'27" | 330.00' | 261.63' | 138.12' |
| (9) | 15°48'45" | 348.00' | 96.04' | 48.33' |
| (10) | 15°47'01" | 348.00' | 95.87' | 48.24' |
| (11) | 92°30'58" | 35.00' | 56.51' | 36.57' |
| (12) | 84°11'17" | 35.00' | 51.43' | 31.62' |

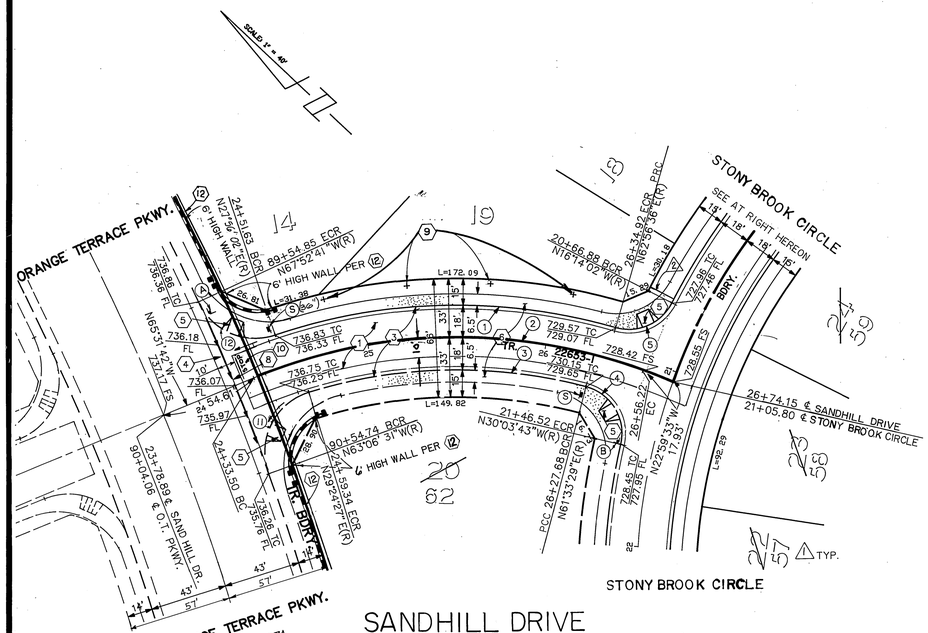


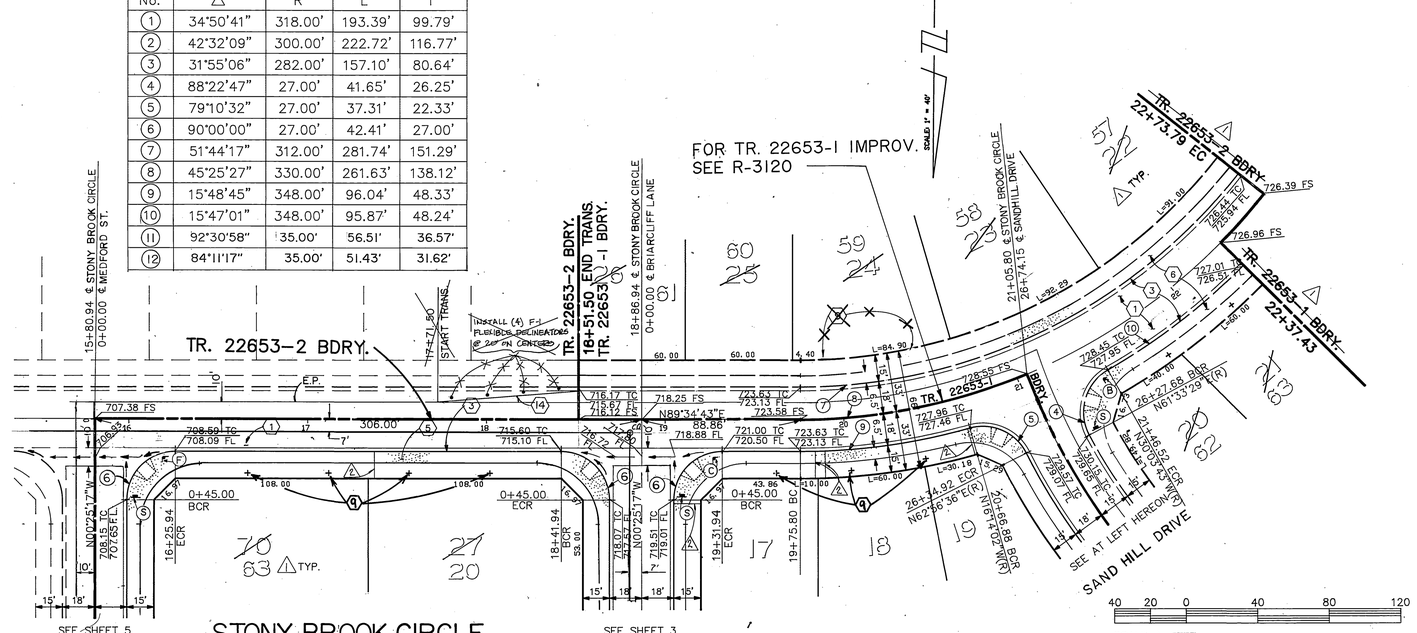


SEE SHEET NO. 1 FOR GENERAL & CONSTRUCTION NOTES.

PC 2910-S

Underground Service Alert
DIAL BEFORE YOU DIG
Call: TOLL FREE
1-800 422-4133
TWO WORKING DAYS BEFORE YOU DIG

*PRIVATE ENGINEERING NOTE*

CONSTRUCTION CONTRACTOR AGREES THAT IN ACCORDANCE WITH GENERALLY ACCEPTED CONSTRUCTION PRACTICES, CONSTRUCTION CONTRACTOR WILL BE REQUIRED TO ASSUME SOLE AND COMPLETE RESPONSIBILITY FOR JOB SITE CONDITIONS DURING THE COURSE OF CONSTRUCTION OF THE PROJECT, INCLUDING SAFETY OF ALL PERSONS AND PROPERTY; THAT THIS REQUIREMENT SHALL BE MADE TO APPLY CONTINUOUSLY AND NOT BE LIMITED TO NORMAL WORKING HOURS, AND CONSTRUCTION CONTRACTOR FURTHER AGREES TO DEFEND, INDEMNIFY AND HOLD DESIGN PROFESSIONAL HARMLESS FROM ANY AND ALL LIABILITY, REAL OR ALLEGED, IN CONNECTION WITH THE PERFORMANCE OF WORK ON THIS PROJECT, EXCEPTING LIABILITY ARISING FROM THE SOLE NEGLIGENCE OF DESIGN PROFESSIONAL

REGISTERED PROFESSIONAL ENGINEER JOHN W. CANTY No. 17550 Exp. 6/30/93 CIVIL STATE OF CALIFORNIA

PREPARED UNDER THE DIRECTION OF: John W. Canty
REGISTERED CIVIL ENGINEER NO. 17550
EXPIRATION DATE 6/30/93 DATE: 6/15/89

APPROVED BY:

**J.F. DAVIDSON ASSOCIATES, INC.**
CIVIL ENGINEERS • SURVEYORS • PLANNERS
P.O. BOX 493, RIVERSIDE, CA 92502 (714) 686-0844
11200 SO. MT. VERNON AVE. #D, COLTON, CA 92324 (714) 825-1082
73-080 EL PASEO, #103, PALM DESERT, CA 92260 (619) 346-5691
JFD ASSOCIATES

SCALE 1"=40'
DATE JUN 1989
BENCH MARK: V.B. 10-64 ELEV. = 1700.670 DATE: 1971 BRASS DISK FLUSH & MARKED V.B. 10-64, 0.6 MI. E. ON VAN BUREN BLVD., FROM CL. INT. OF VAN BUREN & WOOD RD., 205 N. OF VAN BUREN & THE N.E. SIDE OF GRANITE BOULDER, ON TOP OF 3'x15'x18' BOULDER.

| MARK | REVISIONS | APPR. | DATE |
|---|---|---|---|
| 2 | AS-BUILT 3"ø CURB THRU DRAINS. | FRED | 10/16/91 |
| 1 | REVISED PHASE BDRY., LOT #'S & SHT. #'S | FRED | 10/16/91 |

DESIGNED BY M.K. DRAWN BY M.K. CHECKED BY J.F.

CITY OF RIVERSIDE, CALIFORNIA
DEPARTMENT OF PUBLIC WORKS

| APPROVED BY | BY | DATE |
|---|---|---|
| PRINCIPAL ENGINEER | | 11/6/90 |
| PARK DEPARTMENT | | 11/7/90 |
| TRAFFIC DIVISION | | 11/9/90 |
| CHIEF P.W. ENGR. | | 11/14/90 |
| PLANNING | | 11/8/90 |

APPROVED BY
DIRECTOR OF PUBLIC WORKS
DATE 11/21/90

# TRACT No. 22653-4
STREET PLAN & PROFILE
SANDHILL DRIVE
STA. 23+78.89 TO STA. 26+74.15
STONYBROOK CIRCLE
STA. 15+80.94 TO STA. 22+73.79

HORIZ. SCALE: 1" = 40' VERT. SCALE: 1" = 4'

PROJECT NO. R-3110
SHEET 2 OF 10 9
FILE NO. 8911168

INDEXED 12-12-90

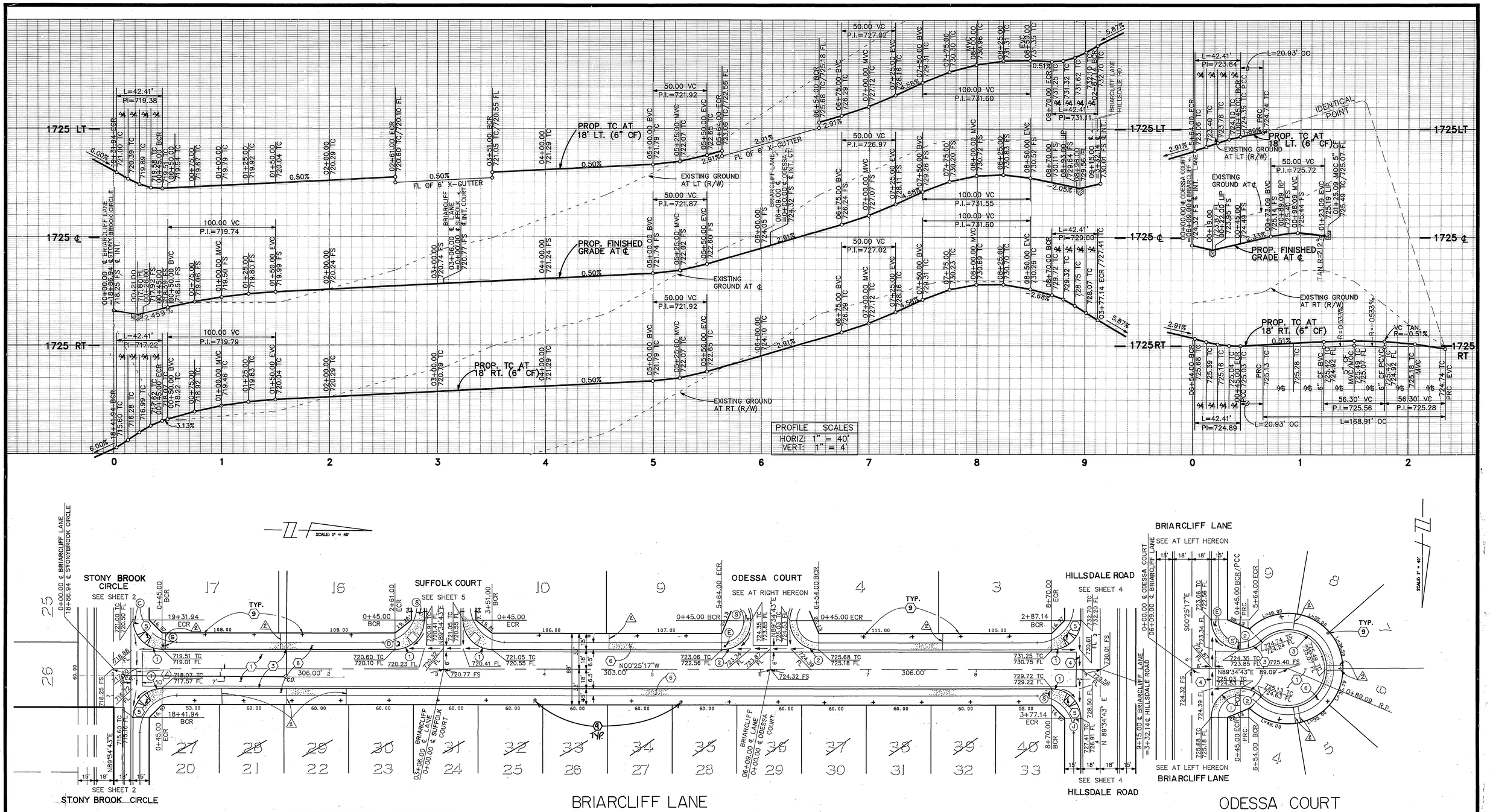


| CURVE DATA | | | | |
|---|---|---|---|---|
| No. | Δ | R | L | T |
| 1 | 90°00'00" | 27.00' | 42.41' | 27.00' |
| 2 | 44°24'55" | 27.00' | 20.93' | 11.02' |
| 3 | 268°49'50" | 36.00' | 168.91' | – |

40 20 0 40 80 120
SCALE IN FEET

SEE SHEET NO. 1 FOR GENERAL & CONSTRUCTION NOTES.

PC 2910-S

**Underground Service Alert**
Call: TOLL FREE
1-800
422-4133
TWO WORKING DAYS BEFORE YOU DIG

*PRIVATE ENGINEERING NOTE*

*CONSTRUCTION CONTRACTOR AGREES THAT IN ACCORDANCE WITH GENERALLY ACCEPTED CONSTRUCTION PRACTICES, CONSTRUCTION CONTRACTOR WILL BE REQUIRED TO ASSUME SOLE AND COMPLETE RESPONSIBILITY FOR JOB SITE CONDITIONS DURING THE COURSE OF CONSTRUCTION OF THE PROJECT, INCLUDING SAFETY OF ALL PERSONS AND PROPERTY; THAT THIS REQUIREMENT SHALL BE MADE TO APPLY CONTINUOUSLY AND NOT BE LIMITED TO NORMAL WORKING HOURS, AND CONSTRUCTION CONTRACTOR FURTHER AGREES TO DEFEND, INDEMNIFY AND HOLD DESIGN PROFESSIONAL HARMLESS FROM ANY AND ALL LIABILITY, REAL OR ALLEGED, IN CONNECTION WITH THE PERFORMANCE OF WORK ON THIS PROJECT, EXCEPTING LIABILITY ARISING FROM THE SOLE NEGLIGENCE OF DESIGN PROFESSIONAL*

REGISTERED PROFESSIONAL ENGINEER
JOHN W. CANTY
No. 17550
Exp. 6/30/93
CIVIL
STATE OF CALIFORNIA

PREPARED UNDER THE DIRECTION OF: John W Canty
REGISTERED CIVIL ENGINEER NO. 17550
EXPIRATION DATE 6/30/93 DATE: 6/15/89
APPROVED BY:

**J.F. DAVIDSON ASSOCIATES, INC.**
CIVIL ENGINEERS • SURVEYORS • PLANNERS
P.O. BOX 493, ☒ RIVERSIDE, CA 92502, (714) 686-0844
11200 SO. MT. VERNON AVE. #D, ☐ COLTON, CA 92324, (714) 825-1082
73-080 EL PASEO, #103, ☐ PALM DESERT, CA 92260, (619) 346-5691
JFD ASSOCIATES

SCALE 1"=40'
DATE JUN 1989

BENCH MARK: V.B. 10-64 ELEV. = 1700.670 DATE: 1971 BRASS DISK FLUSH & MARKED V.B. 10-64. 0.6 MI. E. ON VAN BUREN BLVD. FROM CL. INT. OF VAN BUREN & WOOD RD., 205' N. OF VAN BUREN & THE N.E. SIDE OF GRANITE BOULDER, ON TOP OF 3'x15'x18' BOULDER.

| MARK | REVISIONS | APPR. | DATE |
|---|---|---|---|
| 2 | AS-BUILT 3"ø CURB THRU DRAINS. FRED | MK | 6/17/93 |
| 1 | REVISED LOT #'S & SHT. #'S FRED | MK | 6/15/93 |

DESIGNED BY M.K. DRAWN BY M.K. CHECKED BY J.F.

CITY OF RIVERSIDE, CALIFORNIA
DEPARTMENT OF PUBLIC WORKS

| APPROVED BY | BY | DATE |
|---|---|---|
| PRINCIPAL ENGINEER | [illegible] | 11/9/90 |
| PARK DEPARTMENT | [illegible] | 6/20/90 |
| TRAFFIC DIVISION | [illegible] | 11/6/90 |
| CHIEF P.W. ENGR. | RMG | 11/14/90 |
| | [illegible] | 11/19/90 |

APPROVED BY [signature]
DIRECTOR OF PUBLIC WORKS
DATE 11/21/90

**TRACT No. 22653-4**
STREET PLAN & PROFILE
BRIARCLIFF LANE
STA. 0+00.00 TO STA. 9+15.00
ODESSA COURT
STA. 0+00.00 TO STA. 1+25.09

HORIZ. SCALE: 1" = 40' VERT. SCALE: 1" = 4'

PROJECT NO. R-3110
SHEET 3 OF 10
FILE NO. 8911168

FRED

INDEXED 12-12-90 GH

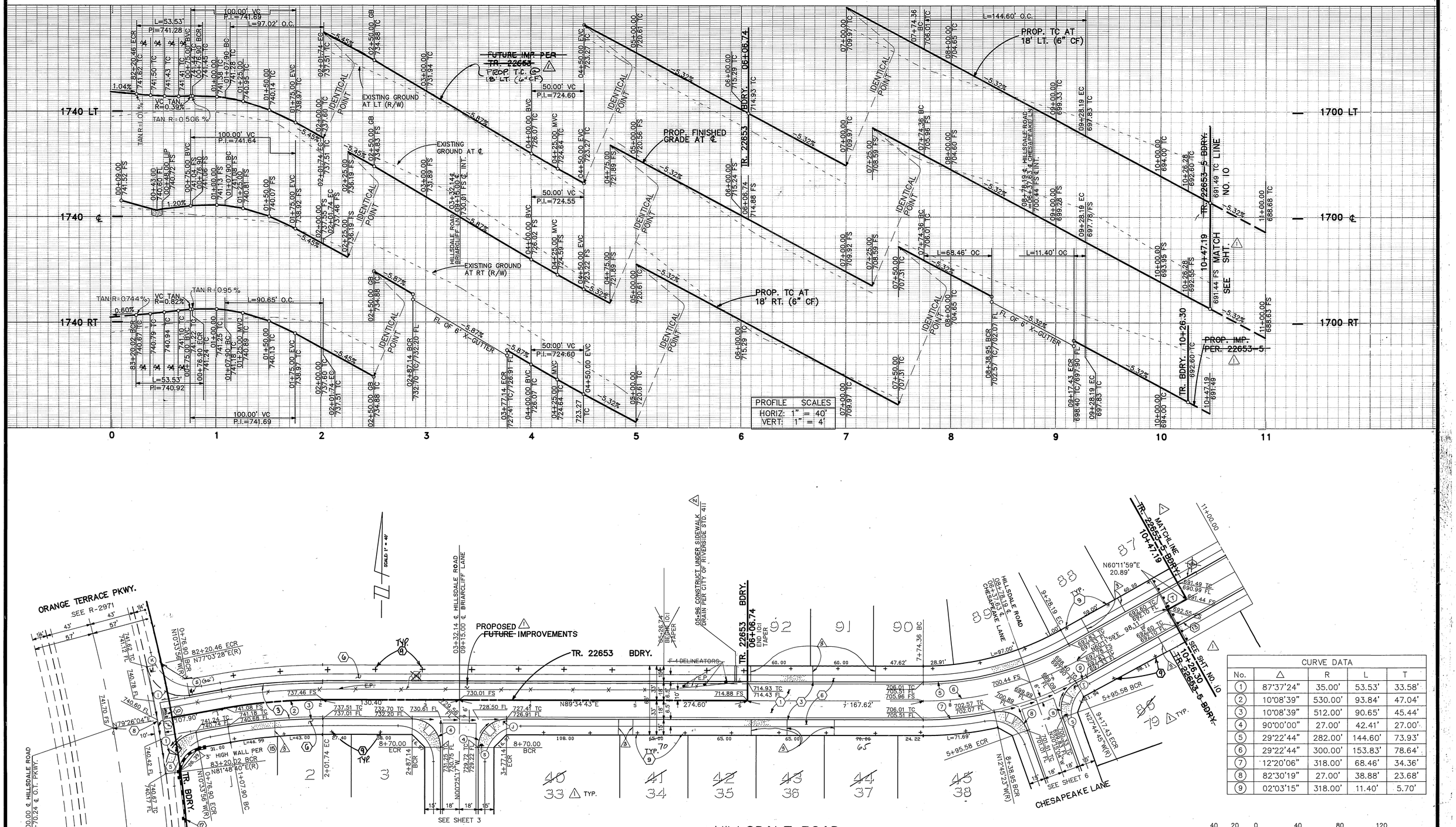





SEE SHEET NO. 1 FOR GENERAL & CONSTRUCTION NOTES.

PC 2910-S

**Underground Service Alert**
CALL BEFORE YOU DIG
Call: TOLL FREE
1-800 422-4133
TWO WORKING DAYS BEFORE YOU DIG

*PRIVATE ENGINEERING NOTE*

*CONSTRUCTION CONTRACTOR AGREES THAT IN ACCORDANCE WITH GENERALLY ACCEPTED CONSTRUCTION PRACTICES, CONSTRUCTION CONTRACTOR WILL BE REQUIRED TO ASSUME SOLE AND COMPLETE RESPONSIBILITY FOR JOB SITE CONDITIONS DURING THE COURSE OF CONSTRUCTION OF THE PROJECT, INCLUDING SAFETY OF ALL PERSONS AND PROPERTY; THAT THIS REQUIREMENT SHALL BE MADE TO APPLY CONTINUOUSLY AND NOT BE LIMITED TO NORMAL WORKING HOURS, AND CONSTRUCTION CONTRACTOR FURTHER AGREES TO DEFEND, INDEMNIFY AND HOLD DESIGN PROFESSIONAL HARMLESS FROM ANY AND ALL LIABILITY, REAL OR ALLEGED, IN CONNECTION WITH THE PERFORMANCE OF WORK ON THIS PROJECT, EXCEPTING LIABILITY ARISING FROM THE SOLE NEGLIGENCE OF DESIGN PROFESSIONAL*

PREPARED UNDER THE DIRECTION OF:
REGISTERED CIVIL ENGINEER NO. 17550
EXPIRATION DATE 6/30/93 DATE: 6/15/89
APPROVED BY:

**J.F. DAVIDSON ASSOCIATES, INC.**
CIVIL ENGINEERS • SURVEYORS • PLANNERS
JFD ASSOCIATES
P.O. BOX 493, RIVERSIDE, CA 92502, (714) 686-0844
11200 SO. MT. VERNON AVE. #D, COLTON, CA 92324, (714) 825-1082
73-080 EL PASEO, #103, PALM DESERT, CA 92260, (619) 346-5691

SCALE 1"=40'
DATE JUN 1989

BENCH MARK:
V.B. 10-64 ELEV. = 1700.670 DATE: 1971
BRASS DISK FLUSH & MARKED V.B. 10-64, 0.6 MI. E. ON VAN BUREN BLVD. FROM CL INT. OF VAN BUREN & WOOD RD., 205' N. OF VAN BUREN & THE N.E. SIDE OF GRANITE BOULDER, ON TOP OF 3"x15"x18" BOULDER.

| MARK | REVISIONS | APPR. | DATE |
|---|---|---|---|
| 3 | AS-BUILT 3"ø CURB THRU DRAINS. | MK | 10/1/91 |
| 2 | UNDER SIDEWALK DRAIN AT 5+96 | MK | 9/25/91 |
| 1 | REVISED BDRY., LOT #'S, SHT. #'S & IMP. | MK | 9/13/91 |

DESIGNED BY M.K. DRAWN BY M.K. CHECKED BY J.F.

CITY OF RIVERSIDE, CALIFORNIA
DEPARTMENT OF PUBLIC WORKS

| APPROVED BY | BY | DATE |
|---|---|---|
| PRINCIPAL ENGINEER | | 11/9/90 |
| PARK DEPARTMENT | | 5/10/90 |
| TRAFFIC DIVISION | | 11/6/90 |
| CHIEF P. W. ENGR. | | 11/16/90 |
| PLANNING | | 10/18/90 |

APPROVED BY
DIRECTOR OF PUBLIC WORKS
DATE 11/21/90

**TRACT No. 22653-4**
**STREET PLAN & PROFILE**
HILLSDALE ROAD
STA. 00+00.00 TO STA. 10+47.19

HORIZ. SCALE: 1" = 40' VERT. SCALE: 1" = 4'

PROJECT NO. R-3110
SHEET 4 OF 10
FILE NO. 89111168

INDEXED 12-12-90 GH

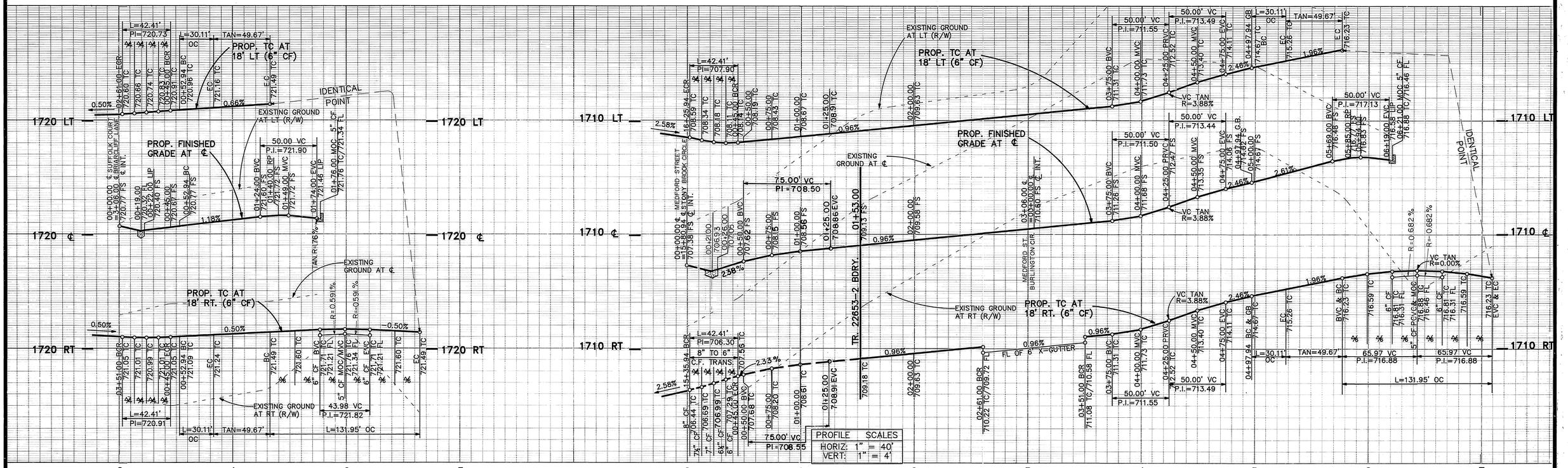


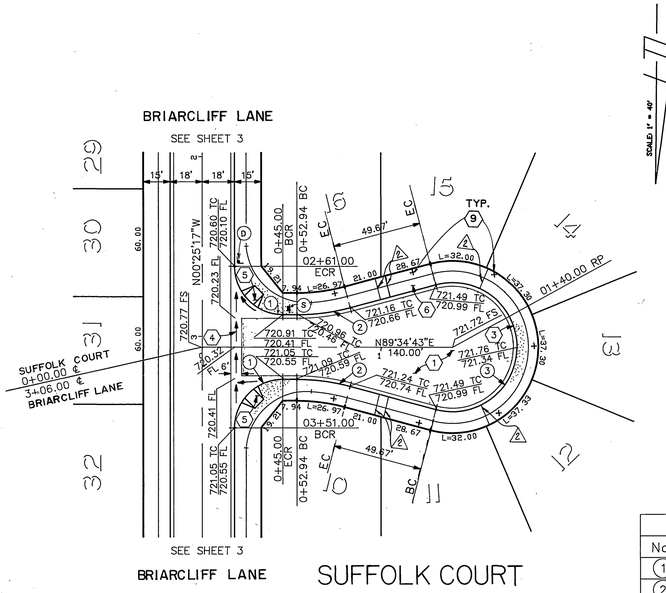


SUFFOLK COURT

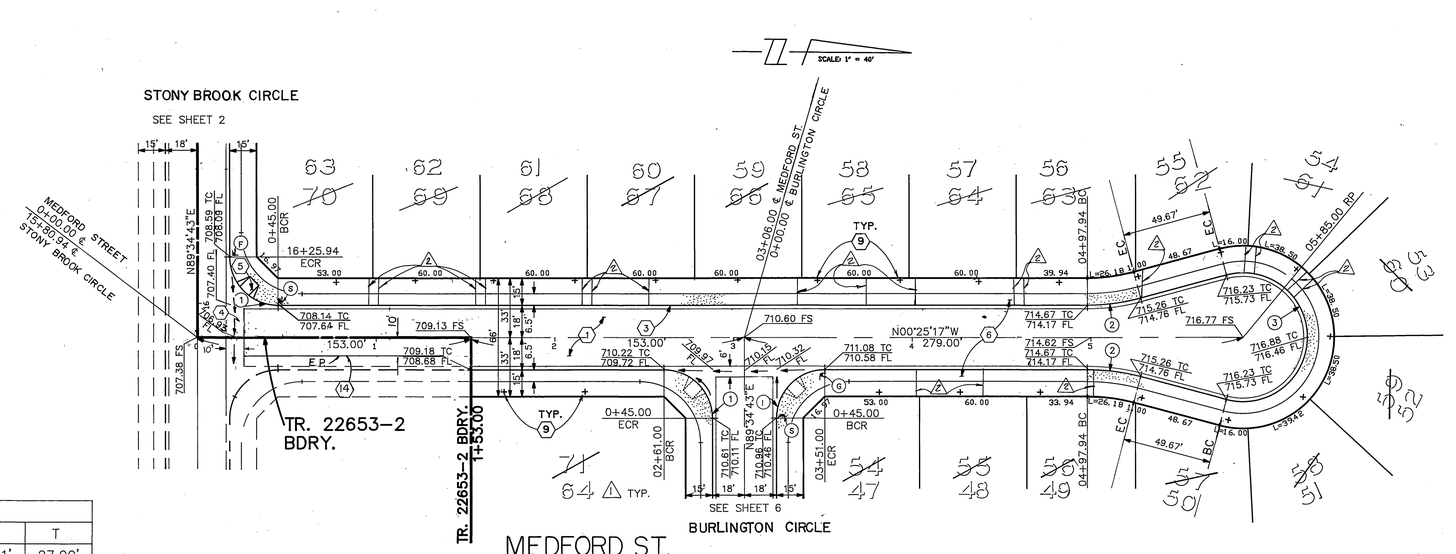


MEDFORD ST.

| CURVE DATA | | | | |
|---|---|---|---|---|
| No. | △ | R | L | T |
| 1 | 90°00'00" | 27.00' | 42.41' | 27.00' |
| 2 | 15°00'00" | 115.00' | 30.11' | 15.14' |
| 3 | 210°00'00" | 36.00' | 131.95' | – |

40 20 0 40 80 120
SCALE IN FEET

SEE SHEET NO. 1 FOR GENERAL & CONSTRUCTION NOTES.

PC 2910-S

**Underground Service Alert**
Call: TOLL FREE
1-800
422-4133
TWO WORKING DAYS BEFORE YOU DIG

*PRIVATE ENGINEERING NOTE*

*CONSTRUCTION CONTRACTOR AGREES THAT IN ACCORDANCE WITH GENERALLY ACCEPTED CONSTRUCTION PRACTICES, CONSTRUCTION CONTRACTOR WILL BE REQUIRED TO ASSUME SOLE AND COMPLETE RESPONSIBILITY FOR JOB SITE CONDITIONS DURING THE COURSE OF CONSTRUCTION OF THE PROJECT, INCLUDING SAFETY OF ALL PERSONS AND PROPERTY; THAT THIS REQUIREMENT SHALL BE MADE TO APPLY CONTINUOUSLY AND NOT BE LIMITED TO NORMAL WORKING HOURS, AND CONSTRUCTION CONTRACTOR FURTHER AGREES TO DEFEND, INDEMNIFY AND HOLD DESIGN PROFESSIONAL HARMLESS FROM ANY AND ALL LIABILITY, REAL OR ALLEGED, IN CONNECTION WITH THE PERFORMANCE OF WORK ON THIS PROJECT, EXCEPTING LIABILITY ARISING FROM THE SOLE NEGLIGENCE OF DESIGN PROFESSIONAL*

REGISTERED PROFESSIONAL ENGINEER JOHN W. CANTY No. 17550 Exp. 6/30/93 CIVIL STATE OF CALIFORNIA

PREPARED UNDER THE DIRECTION OF: John W Canty
REGISTERED CIVIL ENGINEER NO. 17550
EXPIRATION DATE 6/30/93 DATE: 6/15/89
APPROVED BY:

**J.F. DAVIDSON ASSOCIATES, INC.**
CIVIL ENGINEERS • SURVEYORS • PLANNERS
P.O. BOX 493 ☒ RIVERSIDE, CA 92502 (714) 686-0844
11200 SO. MT. VERNON AVE. #D ☐ COLTON, CA 92324 (714) 825-1082
73-080 EL PASEO, #103 ☐ PALM DESERT, CA 92260 (619) 346-5691
JFD ASSOCIATES

SCALE 1"=40'
DATE JUN 1989

BENCH MARK: V.B. 10-64 ELEV. = 1700.670 DATE: 1971 BRASS DISK FLUSH & MARKED V.B. 10-64. 0.6 MI. E. ON VAN BUREN BLVD. FROM CL INT. OF VAN BUREN & WOOD RD., 205' N. OF VAN BUREN & THE N.E. SIDE OF GRANITE BOULDER, ON TOP OF 3'x15'x18' BOULDER.

| MARK | REVISIONS | APPR. | DATE |
|---|---|---|---|
| 2 | AS-BUILT 3"ø CURB THRU DRAINS. FRED | MK | 10/19/90 |
| 1 | REVISED LOT #'S & SHT. #'S FRED | MK | 9/15/90 |

DESIGNED BY M.K. DRAWN BY M.K. CHECKED BY J.F.

CITY OF RIVERSIDE, CALIFORNIA
DEPARTMENT OF PUBLIC WORKS

| APPROVED BY | BY | DATE |
|---|---|---|
| PRINCIPAL ENGINEER | [illegible] | 11/9/90 |
| PARK DEPARTMENT | [illegible] | 9/20/90 |
| TRAFFIC DIVISION | [illegible] | 11/6/90 |
| CHIEF P.W. ENGR. | RMG | 11/14/90 |
| | [illegible] | 11/19/90 |

APPROVED BY Barry Beal
DIRECTOR OF PUBLIC WORKS
DATE 11/21/90

**TRACT No. 22653-4**
STREET PLAN & PROFILE
SUFFOLK COURT
STA. 0+00.00 TO STA. 1+76.00
MEDFORD ST.
STA. 0+00.00 TO STA. 5+85.00

HORIZ. SCALE: 1" = 40' VERT. SCALE: 1" = 4'

PROJECT NO. R-3110
SHEET 5 OF 9
FILE NO. 8911168

FRED

INDEXED 12-12-90 4H

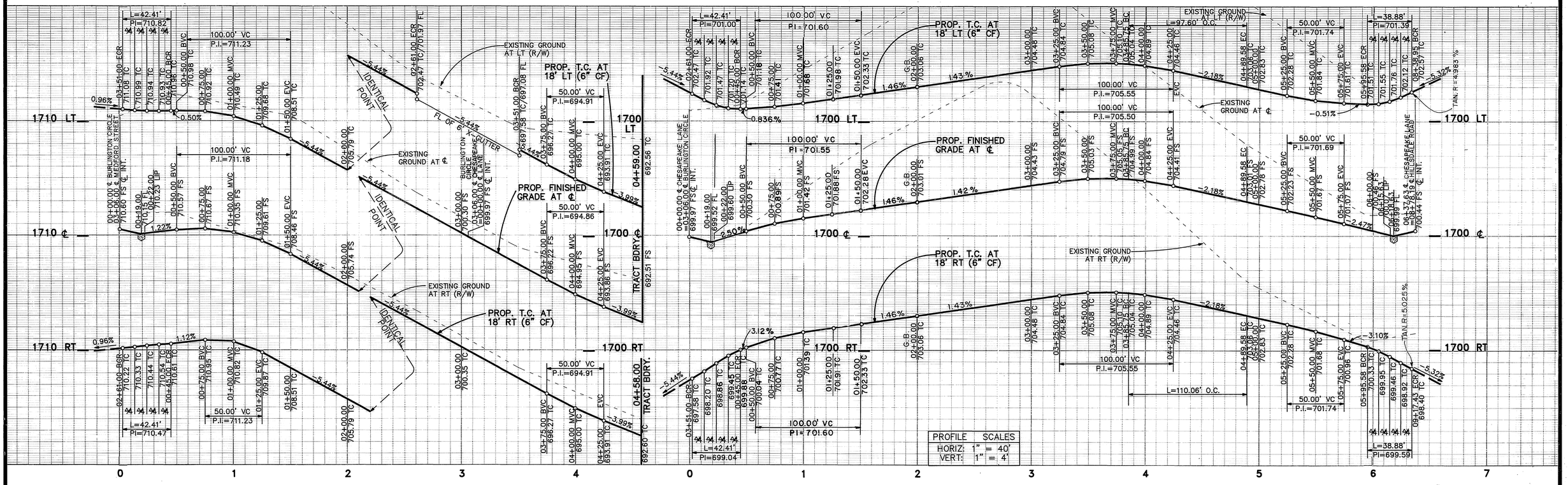


| CURVE DATA | | | | |
|---|---|---|---|---|
| No. | Δ | R | L | T |
| (1) | 90°00'00" | 27.00' | 42.41' | 27.00' |
| (2) | 19°49'47" | 282.00' | 97.60' | 49.29' |
| (3) | 19°49'47" | 300.00' | 103.83' | 52.44' |
| (4) | 19°49'47" | 318.00' | 110.06' | 55.58' |
| (5) | 82°30'19" | 27.00' | 38.88' | 23.68' |

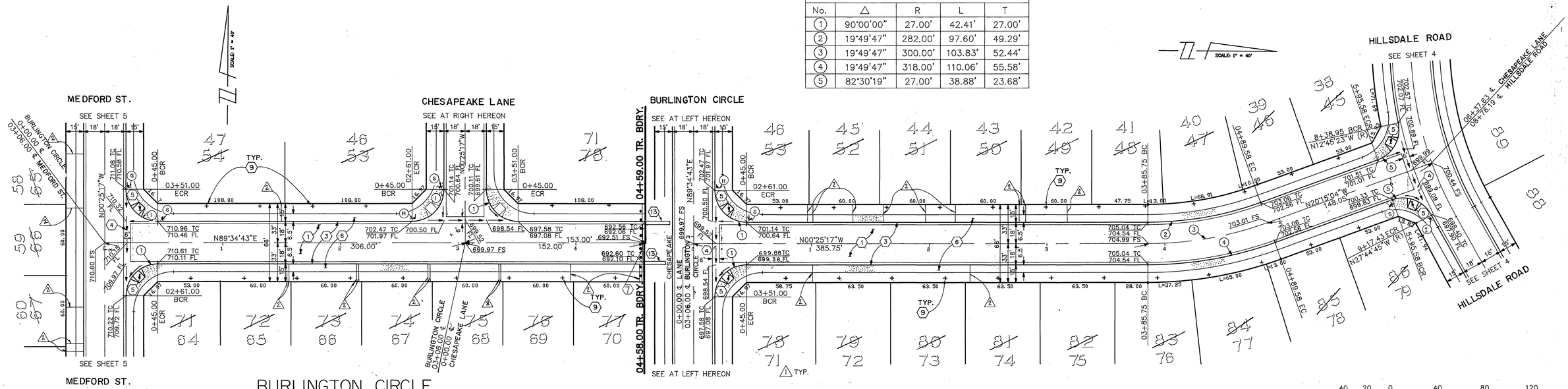


SEE SHEET NO. 1 FOR GENERAL & CONSTRUCTION NOTES.

PC 2910-S

Underground Service Alert
DIAL BEFORE YOU DIG
Call: TOLL FREE
1-800
422-4133
TWO WORKING DAYS BEFORE YOU DIG

*PRIVATE ENGINEERING NOTE*

CONSTRUCTION CONTRACTOR AGREES THAT IN ACCORDANCE WITH GENERALLY ACCEPTED CONSTRUCTION PRACTICES, CONSTRUCTION CONTRACTOR WILL BE REQUIRED TO ASSUME SOLE AND COMPLETE RESPONSIBILITY FOR JOB SITE CONDITIONS DURING THE COURSE OF CONSTRUCTION OF THE PROJECT, INCLUDING SAFETY OF ALL PERSONS AND PROPERTY; THAT THIS REQUIREMENT SHALL BE MADE TO APPLY CONTINUOUSLY AND NOT BE LIMITED TO NORMAL WORKING HOURS, AND CONSTRUCTION CONTRACTOR FURTHER AGREES TO DEFEND, INDEMNIFY AND HOLD DESIGN PROFESSIONAL HARMLESS FROM ANY AND ALL LIABILITY, REAL OR ALLEGED, IN CONNECTION WITH THE PERFORMANCE OF WORK ON THIS PROJECT, EXCEPTING LIABILITY ARISING FROM THE SOLE NEGLIGENCE OF DESIGN PROFESSIONAL

REGISTERED PROFESSIONAL ENGINEER JOHN W. CARTY No. 17550 Exp. 6/30/93 CIVIL STATE OF CALIFORNIA

PREPARED UNDER THE DIRECTION OF: John W Carty
REGISTERED CIVIL ENGINEER NO. 17550
EXPIRATION DATE 6/30/93 DATE: 6/15/89
APPROVED BY:

**J.F. DAVIDSON ASSOCIATES, INC.**
CIVIL ENGINEERS • SURVEYORS • PLANNERS
P.O. BOX 493, RIVERSIDE, CA 92502, (714) 686-0844
11200 SO. MT. VERNON AVE. #D, COLTON, CA 92324, (714) 825-1082
73-080 EL PASEO, #103, PALM DESERT, CA 92260, (619) 346-5691
JFD ASSOCIATES

SCALE 1"=40'
DATE JUN 1989
BENCH MARK: V.B. 10-64 ELEV. = 1700.670 DATE: 1971 BRASS DISK FLUSH & MARKED V.B. 10-64, 0.6 MI. E. ON VAN BUREN BLVD. FROM CL. INT. OF VAN BUREN & WOOD RD., 205' N. OF VAN BUREN & THE N.E. SIDE OF GRANITE BOULDER, ON TOP OF 3'x15'x18' BOULDER.

| MARK | REVISIONS | APPR. | DATE |
|---|---|---|---|
| 1 | AS-BUILT 3"ø CURB THRU DRAINS. | MK | 11/14/90 |
| 2 | REVISED LOT #'S & SHT. #'S | MK | 11/21/90 |

DESIGNED BY M.K. DRAWN BY M.K. CHECKED BY J.F.

CITY OF RIVERSIDE, CALIFORNIA
DEPARTMENT OF PUBLIC WORKS

| | BY | DATE |
|---|---|---|
| APPROVED BY PRINCIPAL ENGINEER | | 4/90 |
| PARK DEPARTMENT | | 5-10-90 |
| TRAFFIC DIVISION | | 11/8/90 |
| CHIEF P.W. ENGR. | | 11/14/90 |
| | | 11/21/90 |

APPROVED BY Barry Bell
DIRECTOR OF PUBLIC WORKS
DATE 11/21/90

# TRACT No. 22653-4
## STREET PLAN & PROFILE
BURLINGTON CIRCLE
STA. 00+00.00 TO STA. 04+59.00
CHESAPEAKE LANE
STA. 00+00.00 TO STA. 06+37.63

HORIZ. SCALE: 1" = 40' VERT. SCALE: 1" = 4'

PROJECT NO. R-3110
SHEET 6 OF 10
FILE NO. 8911168

INDEXED 12-12-90 MH

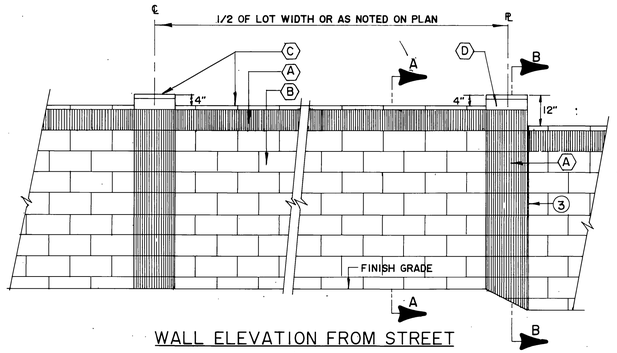


WALL ELEVATION FROM STREET

**WALL ELEVATION**

DETAIL "B"

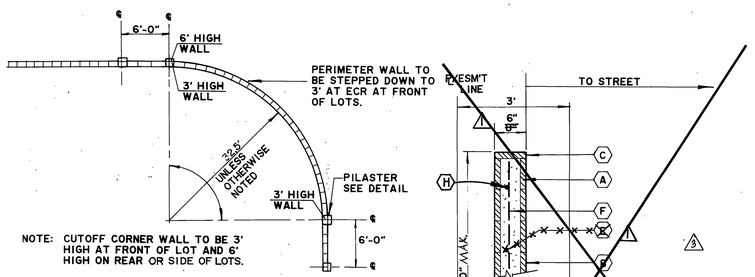


**CURVED WALL AT CORNER**

DETAIL "A"

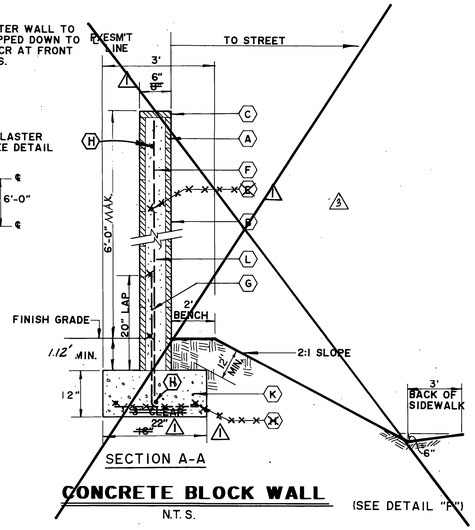


**CONCRETE BLOCK WALL**

N.T.S.

(SEE DETAIL "F")

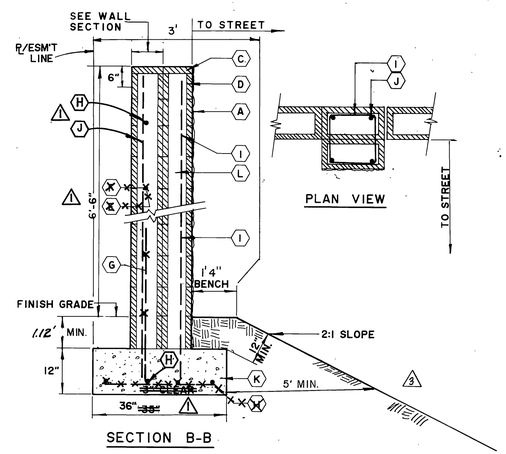

**CONCRETE BLOCK PILASTER**

N.T.S.

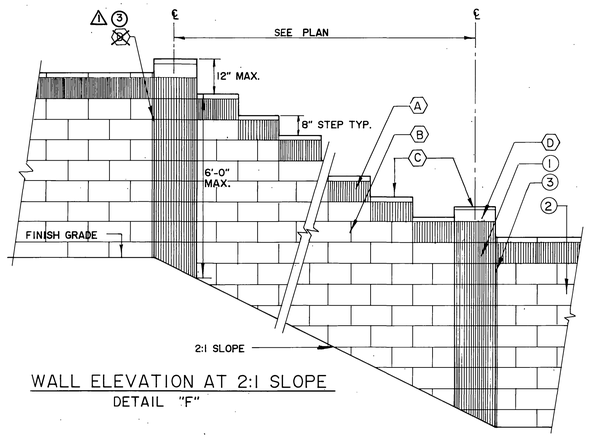


WALL ELEVATION AT 2:1 SLOPE

DETAIL "F"

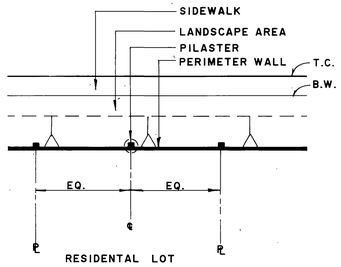


**WALL LAYOUT**

DETAIL "C"

# REVERSE FRONTAGE WALL DETAIL FOR ORANGE TERRACE PKWY.

3 SEE SHEET 7A FOR WALL DETAILS

**LEGEND:**

- (A) 8"x~~8"~~x16" GRAY ORCO (MEDIUM WEIGHT) VERTICAL SCORED SPLIT FACE BLOCK. (6")
- (B) 8"x~~8"~~x16" SPLIT FACE BLOCK GRAY ORCO (MEDIUM WEIGHT) WITH SCORED MORTAR JOINTS. (6")
- (C) 2"x~~8"~~x16" CONC. PRECISION CAP (GRAY). (6")
- (D) 4"x~~8"~~x16" CONC. PRECISION CAP (GRAY).
- ~~(E) NO. 4 HORIZONTAL REBAR AT 32" O.C.~~
- (F) NO. ~~4~~ 3 VERTICAL REBAR AT 24" O.C. (FOR 6' HIGH WALL)
- (G) NO. ~~4 L~~ 3 BAR AT 24" O.C. ~~ALTERNATE BEND EACH BAR.~~ (FOR 6' HIGH WALL)
- ~~(H)~~ NO. 4 REBAR CONT. PER CITY STANDARD
- (I) NO. 2 HORIZONTAL TIES AT 24" O.C.
- (J) (4) NO. 4 VERTICAL BAR AT PILASTER.
- (K) ~~2500~~ 3250 P.S.I. CONC. FOOTING. SOLID
- (L) ~~SOLID~~ GROUT ALL CELLS WHICH CONTAIN REINFORCEMENT STEEL

**LEGEND:**

1. PILASTER SECTION, SEE SECTION "B-"B"
2. PERIMETER WALL SECTION, SEE SECTION "A"-"A"
3. 1/4" WIDE VERTICAL JOINT TYPICAL AT PILASTER AT P.L.

Underground Service Alert — DIG ALERT — Call: TOLL FREE 1-800 422-4133 — TWO WORKING DAYS BEFORE YOU DIG

*PRIVATE ENGINEERING NOTE*

*CONSTRUCTION CONTRACTOR AGREES THAT IN ACCORDANCE WITH GENERALLY ACCEPTED CONSTRUCTION PRACTICES, CONSTRUCTION CONTRACTOR WILL BE REQUIRED TO ASSUME SOLE AND COMPLETE RESPONSIBILITY FOR JOB SITE CONDITIONS DURING THE COURSE OF CONSTRUCTION OF THE PROJECT, INCLUDING SAFETY OF ALL PERSONS AND PROPERTY; THAT THIS REQUIREMENT SHALL BE MADE TO APPLY CONTINUOUSLY AND NOT BE LIMITED TO NORMAL WORKING HOURS, AND CONSTRUCTION CONTRACTOR FURTHER AGREES TO DEFEND, INDEMNIFY AND HOLD DESIGN PROFESSIONAL HARMLESS FROM ANY AND ALL LIABILITY, REAL OR ALLEGED, IN CONNECTION WITH THE PERFORMANCE OF WORK ON THIS PROJECT, EXCEPTING LIABILITY ARISING FROM THE SOLE NEGLIGENCE OF DESIGN PROFESSIONAL.*

REGISTERED PROFESSIONAL ENGINEER — JOE WILLIAM FARAH — No. 44521 — EXP. 3/31/91 — CIVIL — STATE OF CALIFORNIA

PREPARED UNDER THE DIRECTION OF: Joe Farah

REGISTERED CIVIL ENGINEER NO. 44521

EXPIRATION DATE: ____ DATE: 10/15/90

APPROVED BY: ____

SCALE: AS SHOWN

DATE: JUNE 1989


J.F. Davidson Associates, Inc.
ENGINEERING PLANNING SURVEYING ARCHITECTURE LANDSCAPE ARCHITECTURE
3880 Lemon Street, Suite 300, P.O. Box 493, Riverside, CA 92502, (714) 686-0844, FAX 714-686-5954
11200 S. Mt. Vernon Ave., Suite "D", Colton, CA 92324, (714) 825-1082
73-080 El Paseo, Suite 106, Palm Desert, CA 92260, (619) 346-5691, FAX 619-340-0529


BENCH MARK: V.B. 10-64 ELEV. 1700.670 DATE: 1971 BRASS DISK FLUSH & MARKED V.B. 10-64, MI. E. ON VAN BUREN BLVD. FROM CL. INT. OF VAN BURN & WOOD RD., 205' N. OF VAN BUREN OF GRANITE BOULDER ON TOP OF 3'x15'x18' BOULDER.

| MARK | REVISIONS | APPR. | DATE |
|---|---|---|---|
| 3 | CHANGE TO PROTO II WALL; ADDED SHEET 7A | FRED | 9/1/93 |
| 2 | REVISED SHT. #'S | FRED | 11/4/91 |
| 1 | REVISED FREESTANDING WALL DETAILS | FRED | 11/14/90 |

DESIGNED BY B.M. DRAWN BY C.R.G. CHECKED BY J.D.S.

CITY OF RIVERSIDE, CALIFORNIA
DEPARTMENT OF PUBLIC WORKS

| APPROVED BY | BY | DATE |
|---|---|---|
| PRINCIPAL ENGINEER | [illegible] | 11/14/90 |
| PARK DEPARTMENT | [illegible] | 11/20/90 |
| TRAFFIC DIVISION | — | — |
| CHIEF P.W. ENGR. | [illegible] | 11/16/90 |
| PLANNING | [illegible] | 11/16/90 |

APPROVED BY: [illegible] DIRECTOR OF PUBLIC WORKS

DATE 11/21/90

FRED 11/14/90

TRACT 22653 - 4
STREET PLANS
**WALL DETAILS**

FOR: S.I.C.

PROJECT NO. R-3110

SHEET 7 OF 10

FILE NO.: 891 168

P.C. 2820

INDEXED: 12-12-90 [illegible]

1750 LT.

1750 ℄

1750 RT.

SEE SHEET No. 15

MATCHLINE

STA. 78 + 00.00

LT. CURB TRANSITION

47.27 LT.
47.08 RT.
78+24.32 G.B.
46.99 LT.

78+69.97 G.B.
46.41 LT.

79+13.99
45.89 LT

1.26% LT.

1.16% LT.
1.04% RT

1.16% LT.

79+00
44.95

80+00
43.91

81+00
42.87

-1.04%

82+00
41.83

82+20
41.62
END 6" C.G.
BEGIN 6" A.C. BERM

83+00 G.B.
40.79 T.B.

83+20.02
40.67
END 6" A.C. BERM
BEGIN 6" C.G.

84+00
40.19

PROPOSED T.C.
(6" CF) 43' RT.

85+00
39.59

86+00
38.99

-0.60%

87+00
38.39

88+00
37.79

37.19

STA. 89 + 00.00

SEE SHEET No. 9

MATCHLINE

1740 LT.

1740 ℄

1740 RT.

TOP OF PROPOSED
MEDIAN CURB (8" CF)

RT. CURB TRANS.

80+00
45.00
LT & RT

81+00
43.96
LT & RT

-1.04% LT./RT.

82+00
42.92
LT & RT

83+00 G.B.
41.88
LT & RT

84+00
41.28
LT & RT

85+00
40.68
LT & RT

86+00
40.08
LT & RT

-0.60% LT./RT.

86+43.05 G.B.
39.92 RT.

86+73.40 G.B.
39.67 RT.

87+18.98 G.B.
39.51 RT.

87+62.75 G.B.
39.30 RT.

88+00
38.88 LT.
39.08 RT.

38.28 LT.
38.48 RT.

-0.50% RT.

-0.35% RT.

-0.49% RT.

-0.60% LT./RT.

PROPOSED T.C.
(6" CF) 43' RT.

45.99

79+00
44.95

80+00
43.91

81+00
42.87

-1.04%

82+00
41.83

83+00 G.B.
40.79

84+00
40.19

85+00
39.59

86+00
38.99

-0.60%

87+00
38.39

88+00
37.79

37.19

78+00 79+00 80+00 81+00 82+00 83+00 84+00 85+00 86+00 87+00 88+00 89+00

TRACT 22653

HILLSDALE ROAD

1 6 7 8 12 13 14 19

STA. 79 + 13.99 P.C.C.
at 9.00' LT.
N 62°29'29" E(R)

STA. 78 + 69.97 B.C.
at 5.97' LT.
N 60°19'23" E(R)

STA. 78 + 24.32 E.C.
at 0.52' LT.
N 58°08'35" E(R)

MATCHLINE SEE SHEET No. 15 STA. 78 + 00.00

48.89 TC
46.32 FL

46.41 TC
46.74 FL

48.89 TC
45.22 FL

N 37°33'07" W
46.10'

STA. 82 + 10.19
N 76°34'02" E(R)
END S/W

STA. 82 + 20.46
N 77°03'28" E(R)
END 6" C & G
BEGIN A.C. BERM

STA. 82 + 70.24 ℄ O.T. PKWY
=℄ FUTURE STREET

STA. 83 + 20.02
N 81°48'40" E(R)
END 6" A.C. BERM
BEGIN 6" C & G

STA. 83 + 30.29
N 82°48'06" E(R)
BEGIN S/W

NOTE: THESE PLANS ARE TO BE USED FOR WALL LOCATION ONLY. STREET INFORMATION FOR ORANGE TERRACE PARKWAY SHOULD BE FOUND IN R-2971, CFD 86-1-3

STA. 86 + 43.05 P.R.C.
at 9.00' RT.
N 82°45'55" W(R)

STA. 86 + 73.40 E.C.
at 7.47' RT.
N 81°18'58" W(R)

STA. 87 + 18.98 B.C.
at 2.03' RT.
N 79°08'24" W(R)

STA. 87 + 62.75 P.C.C.
at 1.00' RT.
N 77°03'00" W(R)

39.82 TC
39.15 FL

39.67 TC
39.00 FL

39.51 TC
38.84 FL

39.30 TC
38.63 FL

N 02°56'14" E
45.72'

MATCHLINE SEE SHEET No. 9 STA. 89 + 00.00

SANDHILL DRIVE

NOTE TO CONTRACTOR:
EXISTING GROUND SHOWN HEREON HAS BEEN CHANGED SINCE THESE PLANS WERE PREPARED. SEE SPECIFICATION FOR MEASUREMENT AND PAYMENT OF ROADWAY EARTH WORK.

14" (TYP.)

6.5 4.3' 5.7' 9' 9' 11.4' 6.5 4.3' 5.7' 14'

| CURVE DATA | | | | |
|---|---|---|---|---|
| NO. | △ | R | L | T |
| (14) | 139° 57' 44" | 1200.00' | 2931.36' | 3293.59' |
| (17) | 04° 14' 10" | 413.73' | 30.59' | 15.30' |
| (18) | 10° 01' 03" | 254.25' | 44.45' | 22.28' |
| (19) | 04° 14' 35" | 407.65' | 30.19' | 15.10' |
| (20) | 10° 00' 46" | 251.28' | 43.19' | 22.01' |

# ORANGE TERRACE PARKWAY

**Underground Service Alert**
DIG BEFORE YOU DIG
Call: TOLL FREE
1-800
422-4133
TWO WORKING DAYS BEFORE YOU DIG

*PRIVATE ENGINEERING NOTE*

*CONSTRUCTION CONTRACTOR AGREES THAT IN ACCORDANCE WITH GENERALLY ACCEPTED CONSTRUCTION PRACTICES, CONSTRUCTION CONTRACTOR WILL BE REQUIRED TO ASSUME SOLE AND COMPLETE RESPONSIBILITY FOR JOB SITE CONDITIONS DURING THE COURSE OF CONSTRUCTION OF THE PROJECT, INCLUDING SAFETY OF ALL PERSONS AND PROPERTY; THAT THIS REQUIREMENT SHALL BE MADE TO APPLY CONTINUOUSLY AND NOT BE LIMITED TO NORMAL WORKING HOURS, AND CONSTRUCTION CONTRACTOR FURTHER AGREES TO DEFEND, INDEMNIFY AND HOLD DESIGN PROFESSIONAL HARMLESS FROM ANY AND ALL LIABILITY, REAL OR ALLEGED, IN CONNECTION WITH THE PERFORMANCE OF WORK ON THIS PROJECT, EXCEPTING LIABILITY ARISING FROM THE SOLE NEGLIGENCE OF DESIGN PROFESSIONAL*

REGISTERED PROFESSIONAL ENGINEER
JOSE MILAD FARAH
No. 44521
RCE 44521
EXP. 3/31/91
CIVIL
STATE OF CALIFORNIA

PREPARED UNDER THE DIRECTION OF:
REGISTERED CIVIL ENGINEER NO.: 44521
EXPIRATION DATE: DATE: 10/15/90
APPROVED BY:

**J.F. DAVIDSON ASSOCIATES, INC.**
CIVIL ENGINEERS • SURVEYORS • PLANNERS
JFD ASSOCIATES
P.O. BOX 493, RIVERSIDE, CA 92502, (714) 686-0844
11200 SO. MT. VERNON AVE. #D, COLTON, CA 92324, (714) 825-1082
73-080 EL PASEO, #103, PALM DESERT, CA 92260, (619) 346-5691

SCALE: 1" = 40'
DATE: JUNE 1989

BENCH MARK: V.B. 10-64 ELEV. = 1700.670 DATE: 1971
BRASS DISK FLUSH & MARKED V.B. 10-64, 0.6 MI. E. ON VAN BUREN BLVD. FROM CL. INT. OF VAN BUREN & WOOD RD., 205' N. OF VAN BUREN & THE N.E. SIDE OF GRANITE BOULDER, ON TOP OF 3'x15'x18' BOULDER.

| MARK | REVISIONS | APPR. | DATE |
|---|---|---|---|
| 1 | REVISED SHT. #'S | FRED | 11/15/90 |

DESIGNED BY E.F. DRAWN BY T.F.F. CHECKED BY J.F.

FRED 11/15/90

CITY OF RIVERSIDE, CALIFORNIA
DEPARTMENT OF PUBLIC WORKS

| | BY | DATE |
|---|---|---|
| APPROVED BY | | |
| PRINCIPAL ENGINEER | | 11/20/90 |
| PARK DEPARTMENT | | 11/19/90 |
| ~~TRAFFIC DIVISION~~ | | |
| CHIEF P.W. ENGR. | | 11/16/90 |
| PLANNING | | 10-18-90 |

APPROVED BY: Barry Bard
DIRECTOR OF PUBLIC WORKS
DATE 11/21/90

TRACT No. 22653-4
STREET PLAN
REVERSE FRONTAGE WALL

HORIZ. SCALE: 1" = 40' VERT. SCALE: 1" = 4'

PROJECT NO. R-3110
SHEET 8 OF 9
FILE NO. 8911168

INDEXED 12-12-90 GH

PROPOSED T.C. (6" CF) 43' LT

PROPOSED T.C. (6" CF) 43' RT.

TOP OF PROPOSED MEDIAN CURB (8" CF)

EXIST. GROUND ℄

LT. CURB TRANS.

RT. CURB TRANSITION

LT. CURB TRANSITION

RT. CURB TRANS.

SEE SHEET No. 18 STA. 89 + 00.00 MATCHLINE

MATCHLINE SEE SHEET No. 18 STA. 101 + 00.15

1730 LT

1730 ℄

1730 RT

89+00 90+00 91+00 92+00 93+00 94+00 95+00 96+00 97+00 98+00 99+00 100+00 101+00

NOTE TO CONTRACTOR:
EXISTING GROUND SHOWN HEREON HAS BEEN CHANGED SINCE THESE PLANS WERE PREPARED. SEE SPECIFICATION FOR MEASUREMENT AND PAYMENT OF ROADWAY EARTH WORK.

NOTE: THESE PLANS ARE TO BE USED FOR WALL LOCATION ONLY. STREET INFORMATION FOR ORANGE TERRACE PARKWAY SHOULD BE FOUND IN R-2971, CFD 86-1-3

TR. 22653-4

TR. 22653-1

SANDHILL DR. PROPOSED PER TRACT 21839-5

GOLDEN RAIN ROAD PROPOSED PER TRACT 21834

FUTURE 12" W

STA. 22 + 99.64 B.C.R. 37.34 T.C., 36.84 F.L.

STA. 1 + 32.00 E.C.R. 32.35 T.C., 31.85 F.L.

STA. 1 + 2050 END CONSTRUCTION END S/W RETURN

STA. 1 + 32.00 B.C.R. 32.26 T.C., 31.76 F.L.

N30°42'27"E 40.50'

N 37° 50' 26" E

N 24°06'48" E 39.65'

N 20°58'01" E 83.15'

CURB RETURN DATA (H)
Δ = 92° 42' 27"
R = 35.00'
L = 56.63'
T = 36.69'

CURB RETURN DATA (A)
Δ = 90° 00' 00"
R = 35.00'
L = 54.98'
T = 35.00'

CURVE DATA

| NO | Δ | R | L | T |
|---|---|---|---|---|
| (14) | 139° 57' 44" | 1200.00' | 2931.36' | 3293.59' |
| (21) | 05° 14' 13" | 438.35' | 40.07' | 20.05' |
| (22) | 07° 30' 48" | 321.24' | 42.69' | 21.37' |
| (23) | 10° 25' 26" | 240.46' | 43.75' | 21.93' |
| (24) | 12° 15' 27" | 174.43' | 37.32' | 18.73' |
| (25) | 05° 03' 25" | 415.17' | 36.64' | 18.33' |
| (26) | 29° 37' 46" | 1000.00' | 517.13' | 264.49' |
| (27) | 03° 43' 29" | 459.09 | 29.84' | 14.93 |

# ORANGE TERRACE PARKWAY

Underground Service Alert
Call: TOLL FREE 1-800 422-4133
TWO WORKING DAYS BEFORE YOU DIG

PRIVATE ENGINEERING NOTE

CONSTRUCTION CONTRACTOR AGREES THAT IN ACCORDANCE WITH GENERALLY ACCEPTED CONSTRUCTION PRACTICES, CONSTRUCTION CONTRACTOR WILL BE REQUIRED TO ASSUME SOLE AND COMPLETE RESPONSIBILITY FOR JOB SITE CONDITIONS DURING THE COURSE OF CONSTRUCTION OF THE PROJECT, INCLUDING SAFETY OF ALL PERSONS AND PROPERTY; THAT THIS REQUIREMENT SHALL BE MADE TO APPLY CONTINUOUSLY AND NOT BE LIMITED TO NORMAL WORKING HOURS, AND CONSTRUCTION CONTRACTOR FURTHER AGREES TO DEFEND, INDEMNIFY AND HOLD DESIGN PROFESSIONAL HARMLESS FROM ANY AND ALL LIABILITY, REAL OR ALLEGED, IN CONNECTION WITH THE PERFORMANCE OF WORK ON THIS PROJECT, EXCEPTING LIABILITY ARISING FROM THE SOLE NEGLIGENCE OF DESIGN PROFESSIONAL

REGISTERED PROFESSIONAL ENGINEER — MILAD FARAH — RCE 44521 — EXP. — CIVIL — STATE OF CALIFORNIA

PREPARED UNDER THE DIRECTION OF: Milad Farah
REGISTERED CIVIL ENGINEER NO. 44521
EXPIRATION DATE _____ DATE: 10/15/90

APPROVED BY:

J.F. DAVIDSON ASSOCIATES, INC.
CIVIL ENGINEERS • SURVEYORS • PLANNERS
P.O. BOX 493, RIVERSIDE, CA 92502, (714) 686-0844
11200 SO. MT. VERNON AVE. #D, COLTON, CA 92324, (714) 825-1082
73-080 EL PASEO, #103, PALM DESERT, CA 92260, (619) 346-5691
JFD ASSOCIATES

SCALE: 1" = 40'
DATE JUNE 1989

BENCH MARK: V.B. 10-64 ELEV. = 1700.670 DATE: 1971
BRASS DISK, FLUSH & MARKED V.B. 10-64, 0.6 MI. E. ON VAN BUREN BLVD. FROM C.L. INT. OF VAN BUREN & WOOD RD., 205'N. OF VAN BUREN & THE N.E. SIDE OF GRANITE BOULDER, ON TOP OF 3'x15'x18' BOULDER

| MARK | REVISIONS | APPR./ DATE |
|---|---|---|
| 1 | REVISED SHT. #'S AND TR. BDRY. | MF 10/15/90 |

DESIGNED BY E.F. DRAWN BY T.F.E. CHECKED BY J.F.F.

CITY OF RIVERSIDE, CALIFORNIA
DEPARTMENT OF PUBLIC WORKS

| | BY | DATE |
|---|---|---|
| APPROVED BY | | |
| PRINCIPAL ENGINEER | BS | 11/9/90 |
| PARK DEPARTMENT | MA | 11/15/90 |
| TRAFFIC DIVISION | — | — |
| CHIEF P.W. ENGR. | RHG | 11/16/90 |
| PLANNING | Pam | 11/16/90 |

APPROVED BY Barry Bal
DIRECTOR OF PUBLIC WORKS
DATE 11/21/90

TRACT No. 22653-4
STREET PLAN
REVERSE FRONTAGE WALL

HORIZ. SCALE: 1" = 40' VERT. SCALE: 1" = 4'

PROJECT NO. R-3110
SHEET 9 OF 10
FILE NO. 8911168

INDEXED 12-12-90

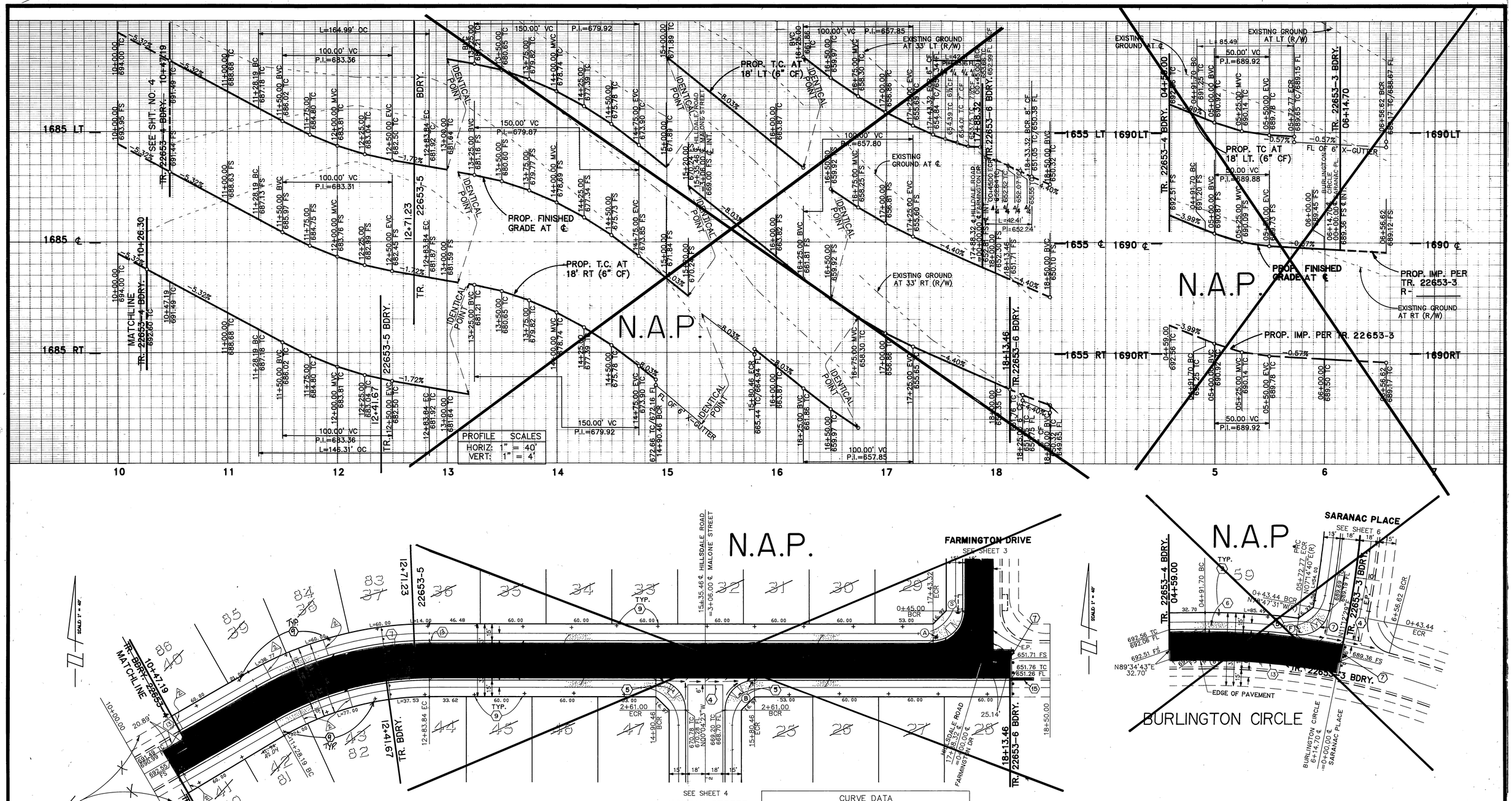


| CURVE DATA | | | | |
|---|---|---|---|---|
| No. | △ | R | L | T |
| 1 | 27°19'06" | 318.00' | 151.62' | 77.28' |
| 2 | 27°19'06" | 300.00' | 143.04' | 72.91' |
| 3 | 21°40'26" | 282.00' | 106.68' | 53.98' |
| 4 | 90°00'00" | 27.00' | 42.41' | 27.00' |
| 5 | 07°39'57" | 624.00' | 83.49' | 41.81' |
| 6 | 11°37'46" | 606.00' | 123.00' | 61.71' |
| 7 | 86°02'11" | 27.00' | 40.54' | 25.19' |

SEE SHEET NO. 1 FOR GENERAL & CONSTRUCTION NOTES.

PC. 2916-S

**Underground Service Alert**
CALL BEFORE YOU DIG
Call: TOLL FREE
1-800
422-4133
TWO WORKING DAYS BEFORE YOU DIG

*PRIVATE ENGINEERING NOTE*

CONSTRUCTION CONTRACTOR AGREES THAT IN ACCORDANCE WITH GENERALLY ACCEPTED CONSTRUCTION PRACTICES, CONSTRUCTION CONTRACTOR WILL BE REQUIRED TO ASSUME SOLE AND COMPLETE RESPONSIBILITY FOR JOB SITE CONDITIONS DURING THE COURSE OF CONSTRUCTION OF THE PROJECT, INCLUDING SAFETY OF ALL PERSONS AND PROPERTY; THAT THIS REQUIREMENT SHALL BE MADE TO APPLY CONTINUOUSLY AND NOT BE LIMITED TO NORMAL WORKING HOURS, AND CONSTRUCTION CONTRACTOR FURTHER AGREES TO DEFEND, INDEMNIFY AND HOLD DESIGN PROFESSIONAL HARMLESS FROM ANY AND ALL LIABILITY, REAL OR ALLEGED, IN CONNECTION WITH THE PERFORMANCE OF WORK ON THIS PROJECT, EXCEPTING LIABILITY ARISING FROM THE SOLE NEGLIGENCE OF DESIGN PROFESSIONAL.

REGISTERED PROFESSIONAL ENGINEER — No. 17550 — 6/30/93 — CIVIL — STATE OF CALIFORNIA

PREPARED UNDER THE DIRECTION OF:
REGISTERED CIVIL ENGINEER NO. 17550
EXPIRATION DATE 6-30-93 DATE: 6/17/89
APPROVED BY:

SCALE 1"=40'
DATE JUN 1989

**J.F. DAVIDSON ASSOCIATES, INC.**
CIVIL ENGINEERS • SURVEYORS • PLANNERS
P.O. BOX 493, RIVERSIDE, CA 92502, (714) 686-0844
11200 SO. MT. VERNON AVE. #D, COLTON, CA 92324, (714) 825-1082
73-080 EL PASEO, #103, PALM DESERT, CA 92260, (619) 346-5691
JFD ASSOCIATES

BENCH MARK:
V.B. 10-64 ELEV. = 1700.670 DATE: 1971
BRASS DISK FLUSH & MARKED V.B. 10-64, 0.16 MI. E. ON VAN BUREN BLVD., FROM CL INT. OF VAN BUREN & WOOD RD., 205' N. OF VAN BUREN & THE N.E. SIDE OF GRANITE BOULDER, ON TOP OF 3'x15'x18' BOULDER.

| MARK | REVISIONS | APPR. | DATE |
|---|---|---|---|
| 2 | AS-BUILT 3"ø CURB THRU DRAINS. | | 6/17/91 |
| 1 | ADDED SHT. NO. 10 | | 6/17/91 |

DESIGNED BY M.K. DRAWN BY M.K. CHECKED BY J.F.

CITY OF RIVERSIDE, CALIFORNIA
DEPARTMENT OF PUBLIC WORKS

| | BY | DATE |
|---|---|---|
| APPROVED BY | | |
| PRINCIPAL ENGINEER | | 11/1/90 |
| PARK DEPARTMENT | | 11/1/90 |
| TRAFFIC DIVISION | | 11/1/90 |
| CHIEF P. W. ENGR. | | 11/1/90 |

APPROVED BY
DIRECTOR OF PUBLIC WORKS
DATE 11/2/90

**TRACT No. 22653-5** 4
STREET PLAN & PROFILE
HILLSDALE ROAD
STA. 10+26.30 TO STA. 18+13.46
BURLINGTON CIRCLE
STA. 04+59.00 TO STA. 06+14.70

HORIZ. SCALE: 1" = 40' VERT. SCALE: 1" = 4'

PROJECT NO. R-3110
SHEET 5 10 10 OF 8
FILE NO. 891168 M

INDEXED 12-13-90 GH

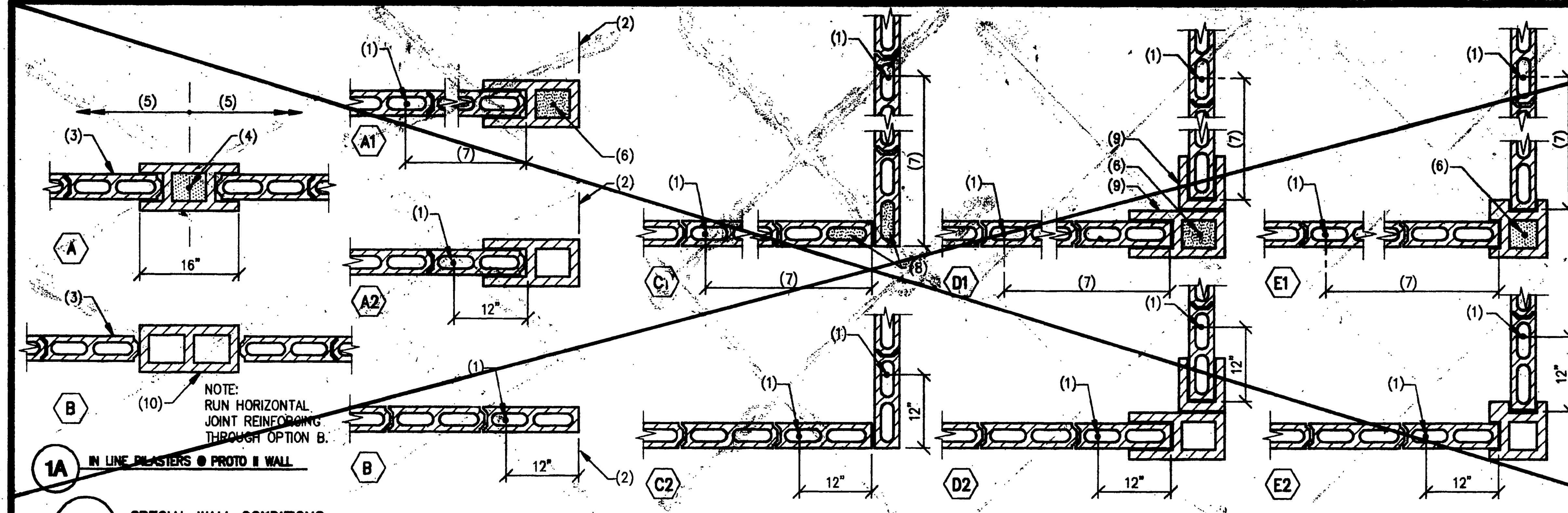


NOTES:
1. POST TENSIONED ROD.
2. END OF WALL.
3. 4" PROTO II WALL.
4. #4 VERTICAL WITH 6" HOOK IN FOUNDATION.
5. PER SPECIFICATIONS – DISTANCE TO NEXT POST TENSIONED ROD.
6. #4 REINFORCING WITH 6" HOOK INTO FOOTING BELOW. FILL WITH GROUT OR 8" HIGH LIFTS OF MORTAR.
7. POST TENSIONED ROD SPACING PER SCHEDULE.
8. FILL CORNER CELL WITH MORTAR (8" HIGH LIFTS) AND LAP HORIZONTAL JOINT REINFORCING.
9. ALTERNATE BLOCK TYPE.
10. THIS PILASTER TO OCCUR BETWEEN POST TENSION RODS. POST TENSION RODS TO BE AT SPACING PER SPECIFICATIONS.

**1** SPECIAL WALL CONDITIONS

NO SCALE

NOTES:
1. FENCE WALL – DETAIL NOT SHOWN FOR CLARITY.
2. FINISHED GRADE.

| FACE OF WALL TO TOP OF SLOPE. | DEPTH OF DIP FOOTING OR PIER. |
|---|---|
| 12" OR MORE | 2'-4" |
| 6" | 2'-7" |
| 3" | 2'-9" |

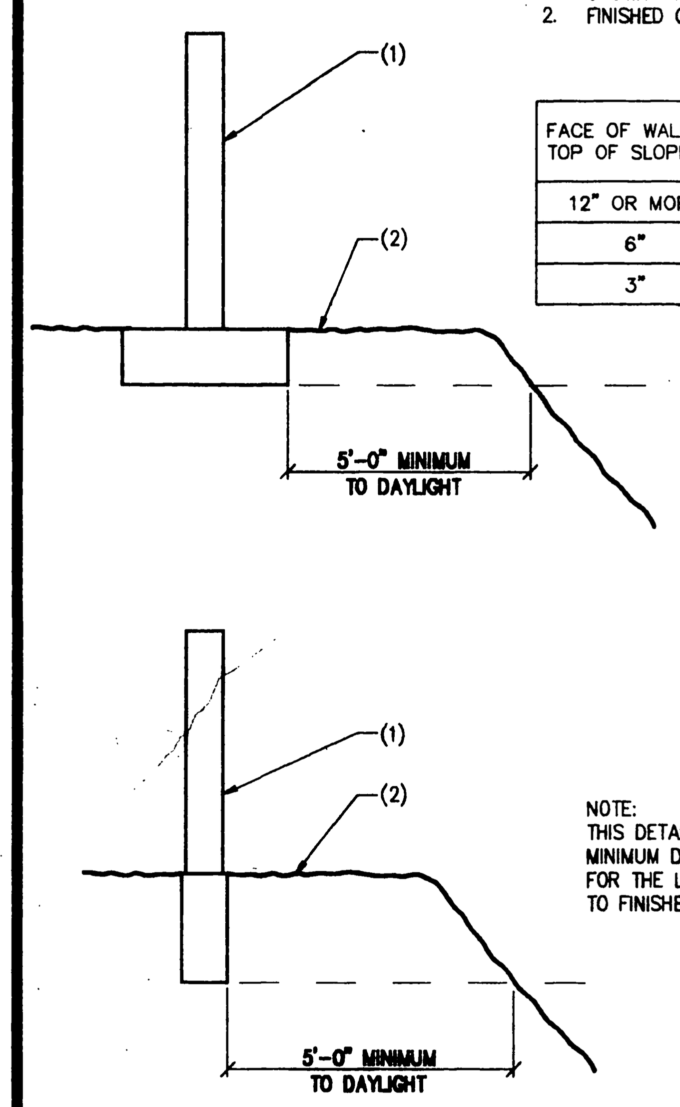


NOTE:
THIS DETAIL DESCRIBES THE MINIMUM DISTANCE REQUIREMENTS FOR THE LOWEST FOOTING EDGE TO FINISHED GRADE.

**9** 5'-0" TO DAYLIGHT DETAIL

NO SCALE

NOTES:
1. GROUT SOLID AT POST-TENSION RODS BELOW GRADE.
2. LOW SOIL.
3. CONCRETE FOOTING.
4. HIGH SOIL.
5. PROTO II FENCE WALL.
6. * 1'-4" MAX. AT 4" PROTO II.
   * 2'-0" MAX. AT 6" PROTO II.
   * 2'-8" MAX AT 8" PROTO II.

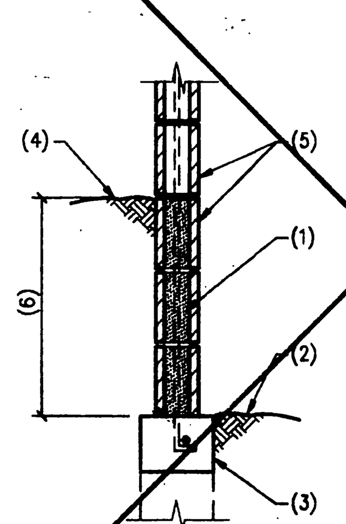


**10** DETAIL AT SOIL RETAINAGE

NO SCALE

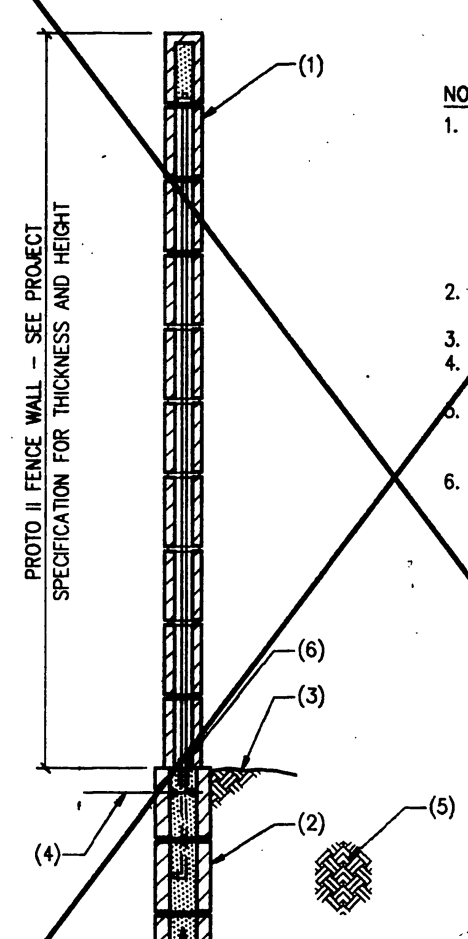


NOTES:
1. PROTO II FENCE WALL PER PRODUCT DATA SHEET.
   A. 7/16"ø ANCHOR BOLT OR FULL HEIGHT ROD SHALL HAVE MIN. 12" EMBED INTO MASONRY RETAINING WALL WITH 3" HOOK.
2. SOLID GROUTED RETAINING WALL. DESIGNED BY OTHERS.
3. FINISHED GRADE.
4. 2 #3 MIN. IN BOND BEAM – LAP 20" WHERE OCCURS.
5. BACKFILL SHALL BE NON-EXPANSIVE SOILS. SEE SOILS REPORT.
6. COUPLER IF ANCHOR BOLT IS USED IN LIEU OF FULL HEIGHT ROD.

NOTE:
PROTO II FENCE WALL CAN BE PLACED AT ANY LOCATION ON THE TOP OF THE RETAINING WALL (FLUSH OR CENTERED) BUT THE POST TENSIONED ROD SHALL AT ALL TIMES BE PLACED BETWEEN THE 2 REINFORCING BARS AT THE TOP OF THE RETAINING WALL.

**7** PROTO II WALL CONNECTION TO TOP OF CONVENTIONAL MASONRY RETAINING WALL

NO SCALE

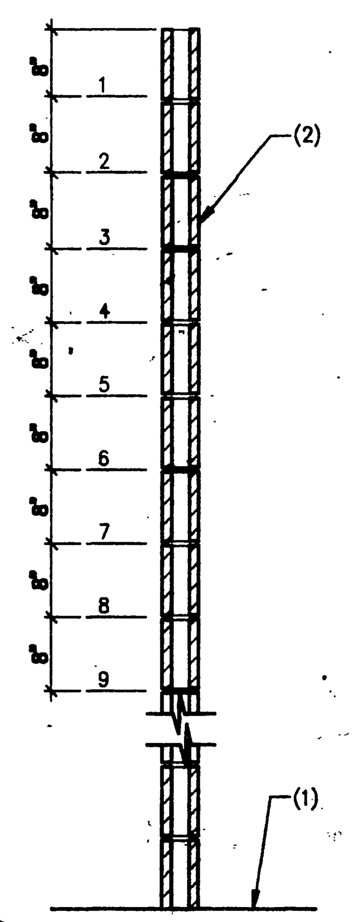


NOTES:
1. TOP OF FOOTING.
2. PROTO II WALL – VERTICAL POST TENSIONED ROD NOT SHOWN FOR CLARITY.
3. 8" HIGH COURSES ARE SHOWN IN DETAIL. OTHER BLOCK SIZES MAY BE USED AS REQUIRED BY THE FENCE WALL DESIGN.

HORIZONTAL JOINT REINFORCING (REF. GENERAL NOTE #14).
1. HORIZONTAL JOINT REINFORCING SHALL BE PLACED AT THE MORTAR JOINTS #2 & #3 BELOW THE PLATE WASHER AND 2'-0" O.C. THEREAFTER UNTIL THE TOP OF FOOTING IS REACHED. (e.g. A NOMINAL 6'-0" HIGH WALL WOULD HAVE JOINT REINFORCING IN AT TOTAL OF THREE COURSES).

**8** HORIZONTAL JOINT REINFORCING

NO SCALE

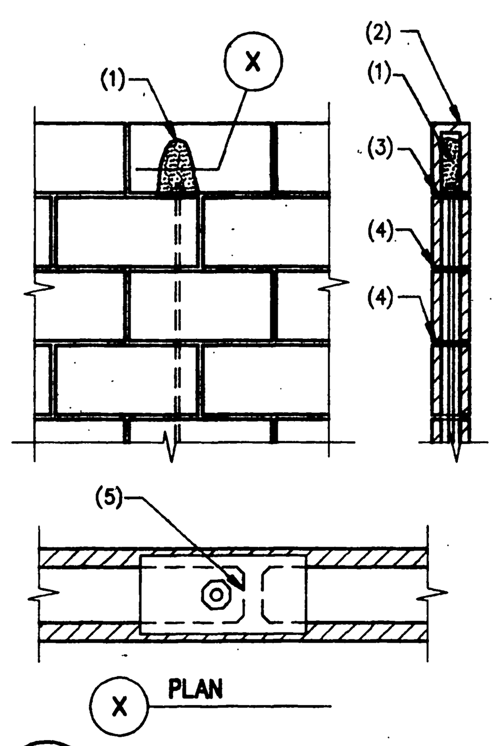


NOTES:
1. FILL CAP BLOCK WITH MORTAR. IMMEDIATELY "FLIP" ONTO ROD.
2. CAP BLOCK OF SUFFICIENT SIZE TO COVER PLATE AND ROD.
3. STEEL PLATE SIZES:
   A. 4" PROTO II: 1/4" x 3" x 6"
   B. 6" PROTO II: 1/4" x 4 1/2" x 6"
   C. 6" SLUMP PROTO II: 1/4" x 4" x 6"
   D. 8" PROTO II: 1/4" x 6 1/2" x 8"
   STEEL PLATES TO BE PLACED AT THE EDGE OF THE CELL SO THAT THE PLATE BEARS FULLY ON THREE SIDES EXCEPT AT 8" PROTO II WHERE THE STEEL PLATE SHOULD BEAR ON ALL FOUR SIDES.
4. CONTINUOUS HORIZONTAL JOINT REINFORCING PER NOTE #14.
5. CENTER WEB BELOW.

**5** TOP OF FENCE DETAIL

NO SCALE

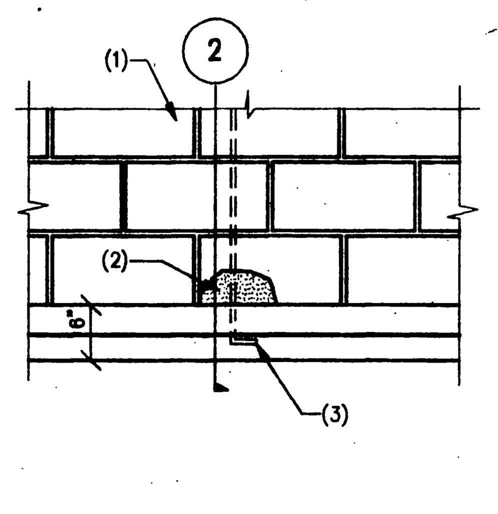


NOTES:
1. MASONRY WALL.
2. 3" MORTAR COVER AROUND COUPLER AND/OR POST TENSIONED ROD FOR CORROSION PROTECTION.
3. 7/16"ø FULL HEIGHT POST TENSIONED RODS WITH 3" HOOKS. ROLL THREADS AT TOP FOR NUT ATTACHMENT.

**6** FOOTING ELEVATION AT POST TENSIONED ROD

NO SCALE

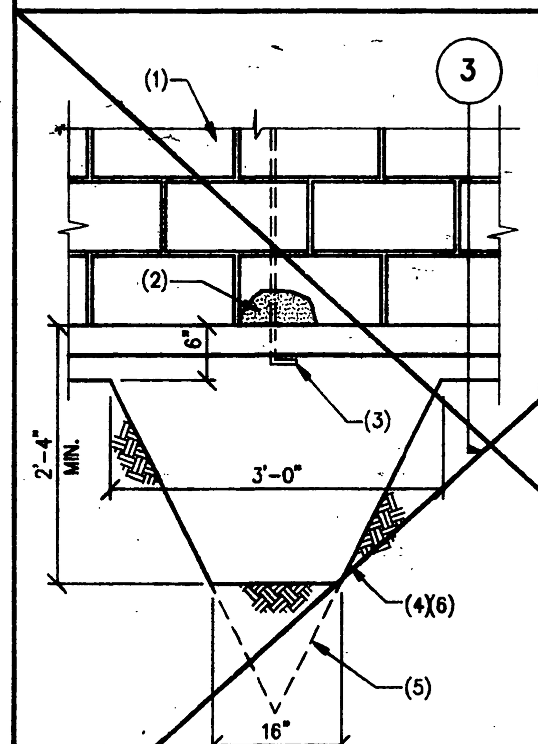


NOTES:
1. MASONRY WALL.
2. 3" MORTAR COVER AROUND COUPLER AND/OR POST TENSIONED ROD FOR CORROSION PROTECTION.
3. 7/16"ø FULL HEIGHT POST TENSIONED RODS WITH 3" HOOKS. ROLL THREADS AT TOP FOR NUT ATTACHMENT.
4. CONCRETE FOOTING – NO COLD JOINTS PERMITTED.
5. TRENCH MAY BE OVEREXCAVATED AS SHOWN – FILL WITH COMPACTED FILL.
6. 13"ø x 3'-6" DEEP CIRCULAR PIER FOOTING MAY BE USED IN LIEU OF DIP FOOTING. SPACING TO REMAIN THE SAME.

**4** DIP FOOTING PROFILE

NO SCALE

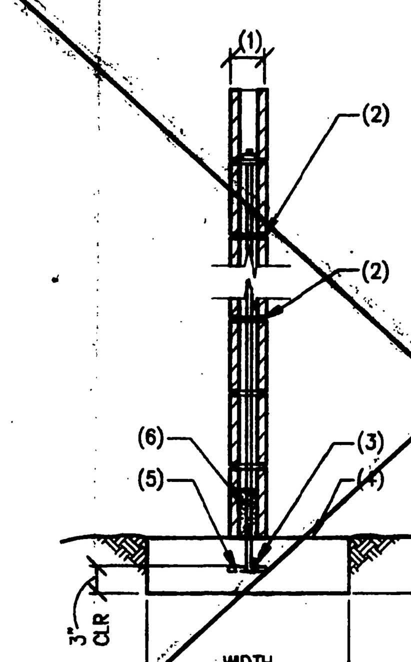


NOTES:
1. 4" NOMINAL (3 5/8" ACTUAL) OR 6" NOMINAL (5 5/8" ACTUAL) OR 8" NOMINAL (7 5/8" ACTUAL) MASONRY.
2. HORIZONTAL JOINT REINFORCING – SEE NOTE #14.
3. #4 CONT. AT 4" & 6" PROTO II #5 CONT. AT 8" PROTO II
4. SPREAD FOOTING – SEE SCHEDULE.
5. ALTERNATE HOOKS OF POST TENSION RODS.
6. 3" MORTAR COVER AROUND COUPLER AND/OR POST TENSIONED ROD FOR CORROSION PROTECTION.

**2** TYPICAL WALL SECTION AT SPREAD FOOTING

NO SCALE

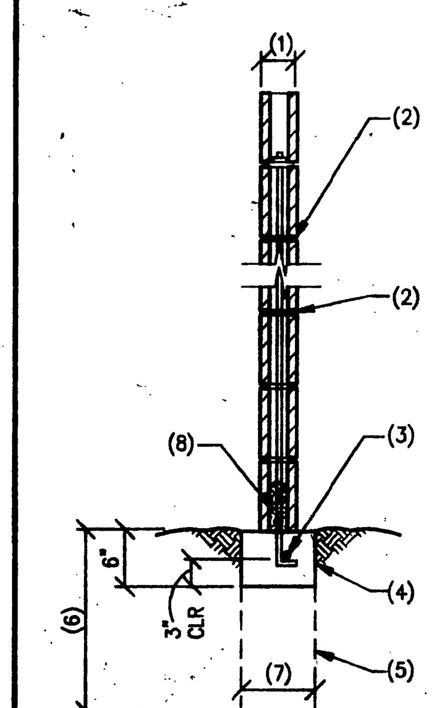


NOTES:
1. 4" NOMINAL (3 5/8" ACTUAL) OR 6" NOMINAL (5 5/8" ACTUAL) OR 8" NOMINAL (7 5/8" ACTUAL) MASONRY.
2. HORIZONTAL JOINT REINFORCING – SEE NOTE #14.
3. #4 CONTINUOUS AT 4" & 6" PROTO II #5 CONTINUOUS AT 8" PROTO II.
4. CONCRETE SETTING PAD.
5. DASHED LINE INDICATES LINE OF DIP FOOTING OR LINE OF CONTINUOUS TRENCH FOOTING.
6. DEPTH OF CONTINUOUS TRENCH FOOTING.
7. * 8" AT 4" AND 6" PROTO II.
   * 8" TO 12" AT 8" PROTO II – SEE SCHEDULE.
   * MINIMUM 10" WIDE X 6" DEEP FLANGE REQUIRED AT 8" PROTO II WALLS ON 8" WIDE TRENCH.
8. 3" MORTAR COVER AROUND COUPLER AND/OR POST TENSIONED ROD FOR CORROSION PROTECTION.

**3** TYPICAL WALL SECTION AT DIP FOOTING AND TRENCH FOOTING

NO SCALE

## GENERAL NOTES

1. WALL IS DESIGNED FOR WIND FORCES AS REQUIRED BY THE LOCAL JURISDICTION BUILDING OFFICIALS SEE SCHEDULE FOR WIND FORCE, POST TENSIONED ROD SPACING, FOOTING SIZE ETC.
2. THESE DESIGNS ARE NOT TO BE USED FOR RETAINING EARTH ABOVE 1'-4" FOR 4" PROTO II, AND 2'-0" FOR 6" PROTO II AND 2'-8" FOR 8" PROTO II AS MEASURED FROM LOW SOIL TO HIGH SOIL.
3. FOOTINGS SHOULD BE LEVEL, OF IF GROUND SLOPES, USE STEP FOOTINGS. EACH STEP SHOULD BE A HEIGHT TO FIT MASONRY SYSTEM. ALL EXCAVATIONS SHOULD BE CLEAN AND CONTAIN NO LOOSE EARTH OR FOREIGN MATTER.
4. SOIL SHALL BE COMPACTED AND HAVE A MINIMUM BEARING CAPACITY OF 1,000 POUNDS PER SQUARE FOOT AND A LATERAL CAPACITY OF 200 POUNDS PER SQUARE FOOT PER FOOT OF DEPTH.
5. SOIL SHALL BE WELL DRAINED FOR FOOTINGS AND FOUNDATIONS, USE CONCRETE WITH A MINIMUM STRENGTH OF 2,000 PSI – TYPE II MINIMUM OF 48 HOURS OLD PRIOR TO TENSIONING.
6. LAP REINFORCING STEEL 40 BARS DIAMETERS (LAP = 20" FOR #4 BARS 25" FOR #5 BARS).
7. CONCRETE MASONRY UNITS SHALL BE 2,000 PSI MINIMUM AND 7 DAYS OLD PRIOR TO TENSIONING.
8. MORTAR SHALL BE TYPE S, 2000 PSI MINIMUM. MORTAR MAY BE USED AS GROUT IN 8" HIGH LIFTS.
9. FIRST COURSE MAY BE SET IN FRESH CONCRETE FOOTING.
10. HEAD JOINTS MAY BE OMITTED IN FIRST COURSE FOR WEEP HOLES.
11. REINFORCING RODS SHALL CONFORM TO ASTM A615 Fy = 40,000 PSI.
12. POST TENSIONING RODS AND ANCHORS SHALL BE 7/16" DIAMETER WITH 1/2" DIAMETER ROLL THREADS OR 1/2" DIAMETER WITH 1/2" DIAMETER CUT THREADS. RODS SHALL CONFORM TO AISI C1008, Fy = 60,000 PSI AREA EQUALS .1503 SQUARE INCHES.
13. LAP HORIZONTAL JOINT REINFORCING 6" OR ONE CROSS WIRE PLUS AN INCH.
14. HORIZONTAL JOINT REINFORCING SHALL BE PLACED PER DETAIL 8. HORIZONTAL JOINT REINFORCING SHALL BE GAGE DIAMETER, LADDER OR TRUSS TYPE, AND CONFORM TO ASTM A82. LAP JOINT REINFORCING ONE FULL SQUARE.
15. IN LIEU OF FULL HEIGHT RODS. CONTRACTOR MAY USE ANCHOR BOLTS AND COUPLERS. 3" HOOK REQUIRED AT END OF ANCHOR BOLT IN FOOTING.
16. POST TENSIONED RODS SHALL BE TENSIONED TO **6,000** POUNDS USING A CALIBRATED TORQUE WRENCH OR OTHER APPROPIATE MEANS.
17. VERTICAL CONTROL JOINTS SHALL BE PROVIDED AT 36'-0" MAX. CONTROL JOINTS SHALL BE PLACED BETWEEN POST TENSIONED RODS SUCH THAT RODS ARE WITHIN 4'-6" MAX. OR CONTROL JOINT. MASONRY BLOCKS MAY INTRTLOCK AT JOINT (MORTAR MAY BE OMITTED). HORIZONTAL JOINT REINFORCING MAY BE INTERRUPTED AT CONTROL JOINTS.
18. ALL STEEL THREADS AND NUTS SHALL BE APPROPRIATELY LUBRICATED AND FREE OF RUST.
19. RODS AND/OR ANCHOR BOLTS MAY BE STABBED INTO WET CONCRETE OR TIED IN PLACE AT CONTRACTORS OPTION.
20. ~~THE FENCE WALL MAY SLOPE WITH THE GRADE AT THE CONTRCATOR'S OPTION (i.e. THE TOP OF WALL IS NOT LEVEL – BUT INSTEAD FOLLOWS THE GRADE SLOPE). MAXINUM SLOPE EQUALS 5% CONFIRM ACCEPTABILLITY OF DESIGN WITH OWNER.~~

## PROTO II FENCE WALL SCHEDULE – CALIFORNIA

**EXPLANATION OF WIND LOAD DESIGNATIONS:**

DIP FOOTING DESIGN

INCLUDES 8" SCHEDULE

WIND LOADS ARE CALCULATED AS FOLLOWS:

p = Ce x Cq x qs x I
p = WIND FORCE IN POUNDS PER SQUARE FOOT (PSF)
Ce = EXPOSURE FACTOR, SEE U.B.C. TABLE 23G
Cq = PRESSURE COEFFICIENT FOR STRUCTURE – SEE U.B.C. TABLE 23H (FOR WALL ELEMENTS Cq = 1.3)
qs = WIND STAGNATION PRESSURE, SEE U.B.C. TABLE 23F AND U.B.C. SECTION 2320
I = IMPORTANCE FACTOR PER U.B.C. TABLE 2406 (FOR FENCES I = 1.0)

EXAMPLE: EXP. C @ 70 MPH REFERS TO EXPOSURE C WITH qs = 70 MPH
p = 1.06 x 1.3 x (.75 x 12.6) x 1.0 = 13.8 PSF
(SEE UBC SECTION 2320)
ABOVE 12'-0" p = 1.06 x 1.3 x 12.6 x 1.0 = 17.4 PSF

PER 1991 UBC

| WIND FORCE | WALL HEIGHT | 4" PROTO II POST TENSION ROD SPACING | 6" PROTO II POST TENSION ROD SPACING | 8" PROTO II POST TENSION ROD SPACING | DIP FOOTING SPACING, SEE DETAIL 4 FOR DIP FOOTING PROFILE, SEE DETAIL 3 FOR SECTION | CONTINUOUS TRENCH FOOTING. SEE DETAIL 3 FOR SECTION. | SPREAD FOOTINGS THICKNESS BY WIDTH (INCHES) SEE DETAIL 2 FOR SECTION. |
|---|---|---|---|---|---|---|---|
| 8.1 PSF 70 MPH EXP B | 3'-4" | 12'-0" | 12'-0" | 16'-0" | 16'-0" | 8" x 13" | 6 X 13 |
| | 4'-0" | 12'-0" | 12'-0" | 16'-0" | 16'-0" | 8" x 14" | 6 X 16 |
| | 4'-8" | 11'-4" | 12'-0" | 16'-0" | 16'-0" | 8" x 15" | 6 X 18 |
| | 5'-4" | 8'-8" | 10'-0" | 10'-0" | 14'-0" | 8" x 17" | 6 X 20 |
| | 6'-0" | 6'-0" | 8'-0" | 8'-0" | 11'-0" | 8" x 18" | 6 X 22 |
| | 6'-8" | 5'-4" | 8'-0" | 8'-0" | 8'-0" | 8" x 19" | 6 X 24 |
| | 7'-4" | – | 7'-4" | 8'-0" | 7'-4" | 8" x 20" | 6 X 27 |
| | 8'-0" | – | 6'-0" | 8'-0" | 6'-0" | 8" x 21" | 6 X 29 |
| | 8'-8" | – | 4'-8" | 6'-0" | – | 8" x 22" | 6 X 31 |
| | 9'-4" | – | 4'-0" | 4'-8" | – | 8" x 23" | 7 X 32 |
| | 10'-0" | – | 3'-4" | 4'-0" | – | 8" x 24" | 7 X 34 |
| | 10'-8" | – | – | 3'-4" | – | 8" x 25" | 8 X 35 |
| | 11'-4" | – | – | 3'-4" | – | 8" x 26" | 8 X 37 |
| | 12'-0" | – | – | 2'-8" | – | 8" x 27" | 9 X 38 |
| 10.2 PSF | 12'-8" | – | – | 2'-0" | – | 10" x 31" | 11 X 39 |
| ABOVE 12'-0" | 13'-4" | – | – | 2'-0" | – | 10" x 32" | 11 X 41 |
| 8.6 PSF 75 MPH EXP B | 3'-4" | 12'-0" | 12'-0" | 16'-0" | 16'-0" | 8" x 13" | 6 X 14 |
| | 4'-0" | 12'-0" | 12'-0" | 16'-0" | 16'-0" | 8" x 14" | 6 X 17 |
| | 4'-8" | 10'-8" | 12'-0" | 16'-0" | 16'-0" | 8" x 16" | 6 X 19 |
| | 5'-4" | 8'-0" | 10'-0" | 10'-0" | 13'-0" | 8" x 17" | 6 X 21 |
| | 6'-0" | 6'-0" | 8'-0" | 8'-0" | 10'-0" | 8" x 18" | 6 X 24 |
| | 6'-8" | 4'-8" | 8'-0" | 8'-0" | 8'-0" | 8" x 20" | 6 X 26 |
| | 7'-4" | – | 6'-8" | 8'-0" | 6'-8" | 8" x 21" | 6 X 28 |
| | 8'-0" | – | 5'-4" | 7'-4" | 5'-8" | 8" x 22" | 6 X 31 |
| | 8'-8" | – | 4'-8" | 5'-4" | – | 8" x 23" | 6 X 33 |
| | 9'-4" | – | 4'-0" | 4'-8" | – | 8" x 24" | 7 X 34 |
| | 10'-0" | – | 3'-4" | 4'-0" | – | 8" x 25" | 7 X 36 |
| 13.8 PSF 70 MPH EXP C | 3'-4" | 12'-0" | 12'-0" | 16'-0" | 16'-0" | 8" x 15" | 6 X 19 |
| | 4'-0" | 8'-8" | 12'-0" | 16'-0" | 14'-8" | 8" x 17" | 6 X 22 |
| | 4'-8" | 6'-8" | 10'-8" | 13'-4" | 10'-8" | 8" x 19" | 6 X 25 |
| | 5'-4" | 4'-8" | 8'-0" | 10'-0" | 8'-4" | 8" x 20" | 6 X 28 |
| | 6'-0" | 3'-4" | 6'-0" | 8'-0" | 6'-6" | 8" x 22" | 6 X 32 |
| | 6'-8" | 2'-8" | 4'-8" | 6'-8" | 5'-4" | 8" x 23" | 6 X 35 |
| | 7'-4" | – | 4'-0" | 4'-8" | 4'-4" | 8" x 25" | 7 X 36 |
| | 8'-0" | – | 3'-4" | 4'-0" | 3'-8" | 8" x 26" | 8 X 38 |
| | 8'-8" | – | 2'-8" | 3'-4" | – | 8" x 27" | 8 X 41 |
| | 9'-4" | – | 2'-0" | 2'-8" | – | 8" x 28" | 9 X 42 |
| | 10'-0" | – | 2'-0" | 2'-0" | – | 8" x 30" | 9 X 45 |
| | 10'-8" | – | – | 2'-0" | – | 10" x 31" | 10 X 46 |
| | 11'-4" | – | – | 1'-4" | – | 10" x 32" | 11 X 47 |
| | 12'-0" | – | – | 1'-4" | – | 10" x 33" | 11 X 50 |
| 17.4 PSF | 12'-8" | – | – | 1'-4" | – | 12" x 37" | 14 X 50 |
| ABOVE 12'-0" | 13'-4" | – | – | 0'-8" | – | 12" x 39" | 14 X 52 |
| 16.9 PSF 80 MPH EXP C | 3'-4" | 10'-8" | 12'-0" | 16'-0" | 16'-0" | 8" x 16" | 7 x 21 |
| | 4'-0" | 7'-4" | 11'-4" | 15'-4" | 12'-0" | 8" x 18" | 7 x 24 |
| | 4'-8" | 5'-4" | 8'-8" | 11'-4" | 8'-8" | 8" x 20" | 7 x 28 |
| | 5'-4" | 3'-4" | 6'-8" | 8'-0" | 6'-8" | 8" x 22" | 7 x 31 |
| | 6'-0" | 2'-8" | 4'-8" | 6'-8" | 5'-4" | 8" x 23" | 7 x 34 |
| | 6'-8" | 2 -0" | 4'-0" | 4'-8" | 4'-4" | 8" x 25" | 7 x 38 |
| | 7'-4" | – | 3'-4" | 4'-0" | 3'-6" | 8" x 26" | 8 x 39 |
| | 8'-0" | – | 2'-8" | 2'-8" | 3'-0" | 8" x 28" | 8 x 43 |
| | 8'-8" | – | 2'-0" | 2'-8" | – | 8" x 29" | 9 X 44 |
| | 9'-4" | – | 1'-4" | 2'-0" | – | 8" x 31" | 10 X 46 |
| | 10'-0" | – | 1'-4" | 2'-0" | – | 10" x 32" | 11 X 47 |

# TRACT NO. 22653-4

## STREET PLANS WALL DETAILS

PROJECT NO. R-3110

SHEET 7A OF 10

HORIZ. SCALE: 1" VERT. SCALE: 1" FILE NO.

CITY OF RIVEPSIDE CALIFORNIA
DEPARTMENT OF PUBLIC WORKS

| APPROVED BY | BY | DATE |
|---|---|---|
| PRINCIPAL ENGINEER | [signature] | 9/7/95 |
| PARK DEPARTMENT | [signature] | 9-6-95 |
| TRAFFIC DIVISION | — | — |
| CHIEF P.W. ENG. | [signature] | 9/14/95 |
| PLANNING | [signature] | 9-7-95 |

APPROVED BY [signature]
DIRECTOR OF PUBLIC WORKS
DATE 9/15/95

NOTES:
1. FOOTING DESIGN ALLOWABLES: 1000 PSF BEARING, 200 PSF/FT LATERAL.
2. MAXIMUM HEIGHT FOR 4" PROTO II = 6'-8": MAX. HEIGHT FOR 6" PROTO II = 10'-0". MAX. HEIGHT FOR 8" PROTO II = 13'-4" COMBINATION WALLS MAY BE USED.
3. MAXIMUM DIP FOOTING SPACING = 16'-0": MINIMUM SPACING = 3'-4". TOLERANCE IS 12"± BUT THE NUMBER OF DIP FOOTINGS MUST REMAIN THE SAME FOR A GIVEN LENGTH OF WALL.
4. POST TENSION ROD IS INDEPENDENT OF FOOTING SPACING.
5. POST TENSION ROD SPACING TOLERANCE IS ±8" BUT THE NUMBER OF RODS FOR A GIVEN LENGTH OF WALL MUST REMAIN THE SAME.
6. 13"ø x 3'-6" DEEP CIRCULAR PIER FOOTING MAY BE USED IN LIEU OF DIP FOOTING. SPACING TO REMAIN THE SAME.

CARUSO TURLEY SCOTT INC.
consulting structural engineers
2702 North 44th Street
Suite 200
Phoenix, Arizona 85008
(602) 912-9120

REGISTERED PROFESSIONAL ENGINEER PAUL G. SCOTT S 3325 EXP. 12/95 STRUCTURAL STATE OF CALIFORNIA 5-25-95

PROTO II FENCE WALL

PTCAL8 REVISED 6-15-94

*PROTO-II™ 4" & 6" THICK POST-TENSIONED MASONRY WALLS

* PATENTED

JOB NUMBER: 86-286
DRAWN: MSW
CHECKED: PGS
SCALE: AS NOTED
DATE: 6-1-93
SHEET: 1 OF 1