LANDSCAPE ARCHITECTURAL CONSTRUCTION DOCUMENTS FOR

CONCORDIA HOMES, INC.

408 SOUTH STODDARD AVENUE, SAN BERNARDINO, CALIF. 92401

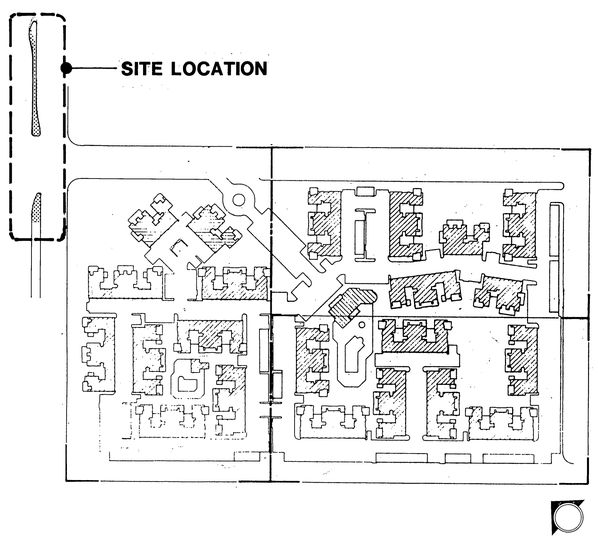

ABBREVIATIONS

SHEET INDEX

L-1 TITLE SHEET
L-2 IRRIGATION PLANTING PLAN
L-3 DETAILS
L-4 SPECIFICATIONS
L-5 SPECIFICATIONS
L-6 IRRIGATION REFERENCE SHEET

VICINITY MAP

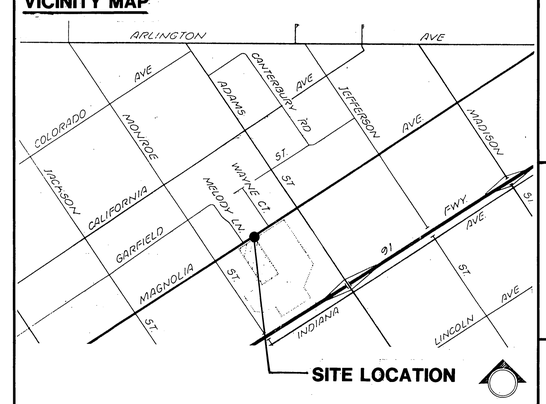

APPROVAL BY: _____ DATE _____

APPROVAL BY: _____ DATE _____

APPROVAL BY: _____ DATE _____

APPROVAL BY: _____ DATE _____

REGISTERED LANDSCAPE ARCHITECT
RICHARD A. POLHAMUS
2782
Signature
11/6/91
Date
STATE OF CALIFORNIA

CLOSSON & CLOSSON
LANDSCAPE ARCHITECTURE
1855 West Katella Avenue, Suite 230, Orange, CA 92667, 714-639-2252

11/06/91

MARK	REVISIONS	APPR.	DATE
	12/20/91		

DESIGNED BY_____ DRAWN BY_____ CHECKED BY_____

CITY OF RIVERSIDE
PUBLIC WORKS DEPARTMENT

APPROVED BY	DATE	BY
PRINCIPAL ENGINEER	4/13/92	DLA
PARK DEPARTMENT	2-7-92	[illegible]
TRAFFIC DIVISION	—	—
CHIEF P. W. ENGINEER	2/10/92	[illegible]

APPROVED BY [illegible]
PUBLIC WORKS DIRECTOR
DATE 2/19/92

LANDSCAPE ARCHITECTURAL PLAN FOR
R-28-889 & PRD-4-901
COLLEGE PARK VILLAS MEDIANS
TITLE SHEET

HORIZ. SCALE: 1" = VERT. SCALE: 1" =

ACCOUNT NO. R3236L

SHEET L-1 OF 6

PC 3327-M

INDEXED 4-1-92 [illegible]

91-051.01

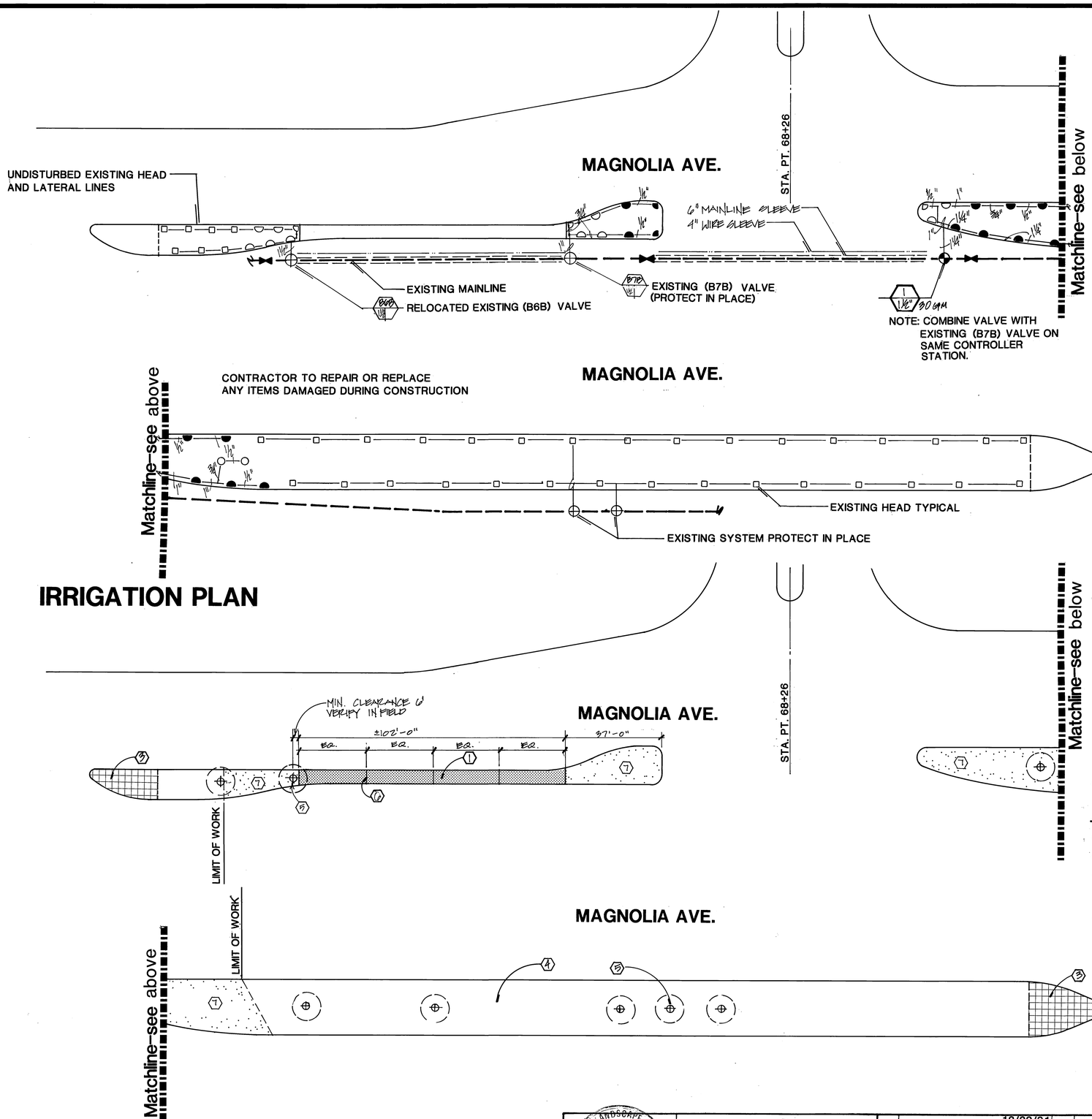

IRRIGATION PLAN

PLANTING & CONSTRUCTION PLAN

MEDIAN LEGEND

TORO	570C-4P-CV-10QLA PC	POP-UP TURF SPRAY	10'	.40	40
TORO	570C-4P-CV-10HLA PC	POP-UP TURF SPRAY	10'	.90	40
TORO	570C-4P-CV-10FLA PC	POP-UP TURF SPRAY	10'	1.70	40
TORO	570C-4P-CV 15Q	POP-UP TURF SPRAY	15'	1.0	30
TORO	570C-4P-CV 15H	POP-UP TURF SPRAY	15'	2.0	30

RAINBIRD EFB CP REMOTE CONTROL VALVE

SCH 40 WIRE SLEEVE

EXISTING VALVE

EXISTING MAINLINE 3"

NIBCO T-113 GATE VALVE LINE SIZE

SCH 40 MAINLINE SLEEVE

CONSTRUCTION LEGEND

1. PROPOSED MEDIAN W/ BOMANITE TO MATCH EXISTING PER DETAIL G SHT. L-3. (EXISTING PLANT MATERIAL TO BE REMOVED.)
2. ~~EXISTING SHRUBS TO REMAIN, AND PROTECT IN PLACE (O).~~
3. EXISTING BOMANITE TO REMAIN, AND PROTECT IN PLACE.
4. EXISTING PLANT MATERIAL TO REMAIN, AND PROTECT IN PLACE.
5. EXISTING TREES TO REMAIN, AND PROTECT IN PLACE (⊕). SEE STREET IMPROV. PLANS R-3242
6. EXPANSION JOINT
7. HYDROSEED TURF (SEE SPECS.)

GENERAL NOTES FOR MEDIAN LANDSCAPING

1. All related work shall conform to the City of Riverside Park and Recreation Department Standards and City of Riverside policies.
2. When calling for inspections, contact the Park Projects Inspector a minimum of 48 hours in advance at (714) 782-5223 to schedule an inspection. A Field Notice will be issued as written approval for each stage of inspection. A verbal approval will not be acceptable. Inspections are required at the following times during the course of the project:
   a. Prior to commencement of any work, for the purpose of a pre-construction meeting;
   b. Prior to the installation of irrigation lines or components;
   c. Prior to pouring concrete for inspection of hardscape formwork;
   d. During hydrostatic pressure test of irrigation mainline prior to backfill of main line trench;
   e. Inspection of lateral lines and heads prior to backfill of trenches;
   f. Upon completion of fine grading, but prior to commencement of soil preparation, for acceptance of fine grading work;
   g. Inspection of completed finish grading work after soil amendment work;
   h. Upon completion of the irrigation system for a coverage test and demonstration of the system as fully operational.
   i. When plant locations have been spotted in the field but prior to digging plant pits;
   j. While digging plant pits and planting/relocating trees;
   k. During application of pre-emergent chemical. Pre-emergent chemical treatment shall be applied at the following times during the contract: a) before planting, b) at the beginning of plant establishment period, c) periodically as necessary during the plant establishment period, and d) at end of plant establishment period;
   k. After planting and all other indicated or specified work has been completed, for start of maintenance;
   l. At formal quarterly inspections;
   m. After completion of the maintenance period.
3. Upon receipt of written acknowledgement of the City's final acceptance, the developer will be released from maintenance. (Until receipt of written notification from the City that the Park and Recreation Department is assuming maintenance responsibilities, the developer shall remain responsible for the project.)
4. The Developer shall be responsible to have all plantings acceptably maintained for a minimum period of (one (1) year/two (2) years).

NOTE:
* ALL WIRES UNDER PAVEMENT SHALL BE INSTALLED IN A SEPARATE SLEEVE FROM PIPING PER CITY OF RIVERSIDE - PARK AND RECREATION DEPARTMENT STANDARDS.
* ALL PIPING UNDER PAVEMENT SHALL BE INDIVIDUALLY SLEEVED PER CITY OF RIVERSIDE - PARK AND RECREATION DEPARTMENT STANDARDS.
* IRRIGATION SYSTEMS SHALL BE SPLIT AND VALVED IN A MANNER TO AVOID NON-PRESSURIZED LATERAL LINES UNDER STREETS. ONLY PRESSURE LINES ARE PERMITTED UNDER STREETS.
* ANGLED FITTINGS ARE NOT ALLOWED IN PIPE OR WIRE SLEEVING.

PLANTING NOTE

ANY EXISTING PLANT MATERIAL THAT HAS BEEN DAMAGED DURING CONSTRUCTION STAGE, MUST BE REPLACED BY CONTRACTOR IN LIKE SIZE AND KIND.

IRRIGATION NOTES

1. EXISTING IRRIGATION MAINLINE TO REMAIN. CONTRACTOR SHALL COORDINATE WITH DEMOLITION CONTRACTOR AND PROVIDE ALL NECESSARY REPAIRS TO MAINLINE DUE TO DEMOLTION TO ENSURE PROPER OPERATION. MAINLINE **AND WIRE WILL REQUIRE SLEEVING.**
2. ALL EXISTING VALVES, HEADS AND LATERAL LINES WHICH ARE LOCATED IN PROPOSED BOMANITE MEDIAN AREAS SHALL BE SALVAGED AND TURNED OVER TO THE CITY AND REPLACED ACCORDING TO NEW IRRIGATION PLAN AND LEGEND.
3. CONTROLLER LOCATION AT STA. PT. **49+04**
4. **REFER TO IRRIGATION SPECS. SHT. L-5 FOR CONTROLLER SCHEDULING REQUIREMENTS.**
5. CONTRACTOR SHALL SCHEDULE A PRE CONSTRUCTION WALK THROUGH INSPECTION WITH THE PARK PROJECTS INSPECTOR TO DOCUMENT CONDITION OF EXISTING IRRIGATION SYSTEM AND PLANTING.
6. EXISTING MAINLINE AND CONTROL WIRES WILL NEED TO BE CUT IN ORDER TO INSTALL NEW **SLEEVE.**

WIRE SPLICES WITHIN SLEEVE WILL NOT BE PERMITTED. ALL SPLICES TO BE MADE PER PART 3.08 WIRING OF IRRIGATION SPECS. SHEET L-5

Plan Cross References

For notes & legend, see sheet L-2 (This sheet)
For details, see sheet L-3
For specifications, see sheet L-4 L-5 Bomanite Specs. L-3
For corresponding exist. irri. plan, see sheet L-6 & L-7

Scale 1"=20'

REGISTERED LANDSCAPE ARCHITECT RICHARD A. POLTANOWICZ 2762 STATE OF CALIFORNIA 11/6/91

CLOSSON & CLOSSON
LANDSCAPE ARCHITECTURE
1355 West Kazella Avenue, Suite 230, Orange, CA 92667, 714-639-2252

11/06/91

MARK	REVISIONS	APPR.	DATE
	12/20/91		

DESIGNED BY ____ DRAWN BY ____ CHECKED BY ____

CITY OF RIVERSIDE
PUBLIC WORKS DEPARTMENT

APPROVED BY	DATE	BY
PRINCIPAL ENGINEER	2/13/92	
PARK DEPARTMENT	2-7-92	
TRAFFIC DIVISION	—	—
CHIEF P. W. ENGINEER	2/18/92	

APPROVED BY
PUBLIC WORKS DIRECTOR
DATE 2/19/92

LANDSCAPE ARCHITECTURAL PLAN FOR
R-28-889 & PRD-4-901
COLLEGE PARK VILLAS MEDIANS
IRRIGATION & PLANTING

HORIZ. SCALE: 1" = VERT. SCALE: 1" =

ACCOUNT NO. R3236L

SHEET L-2 OF 6

PC 3327-M

INDEXED 4-1-92 LH

91-051.01

SECTION 03356 - STAMPED CONCRETE (INTEGRAL COLOR)

PART 1 - GENERAL

1.01 RELATED DOCUMENTS:

The Special Provisions of the Specification as well as the "Standard Specifications" shall apply except as modified herein.

1.02 SCOPE OF WORK:

Exterior walks and slabs as shown on drawings
Forming
Cement, finish
Setting of items to be inserted into concrete
Reinforcement dowels
Curing
Placing of sleeves, conduit stubs, and drain lines under slabs

1.03 QUALITY ASSURANCE:

The work shall be performed by qualified personnel trained to obtain the textured finish specified herein. The contractor shall provide written evidence to the Park Department that the installer for this work has satisfactorily completed at least three installations.

1.04 SAMPLE POUR:

The contractor shall provide a sample pour on site of sufficient size, minimum ~~88~~ 9 S.F., to demonstrate the required stamped concrete work, including integral color, wax curing and finishing compounds. A minimum period of 28 days will be required for adequate curing of the sample pour prior to inspection. Stamped concrete work shall not be performed prior to the inspection and written approval of the sample by the Park Projects Inspector. If not approved, additional sample panels will be required until approval is achieved. All other portions of the stamped concrete work shall match the color and finish of the approved sample pour.

1.05 DEFECTIVE WORK:

No patching will be permitted to correct defective work without first obtaining permission of City Inspector. If in the Inspector's opinion, patching does not restore the quality and appearance of the work, defective sections shall be removed and replaced. Inconsistencies in color will be considered as defective work. No extension of time will be allowed for correcting defective work.

1.06 INSPECTIONS:

Inspections are required. Contractor shall call for inspection a minimum of 48 hours (two working days) prior to need.
The contractor shall call for inspection at specific steps in the construction process including those points in time when:

1) All sleeve, conduit, and drainline installation is complete, but prior to backfill of trenches.
2) All form work is placed and all subgrade work is complete, but prior to pour.

Contractor shall notify the Park Projects Inspector, (714) 782-5223, a minimum of 48 hours prior to pouring any concrete.

Any work covered prior to inspection shall be opened to view by the Contractor at his expense if so directed by the Inspector.

PART 2 - MATERIALS

2.01 All materials shall conform to Section 201 of the Standard Specifications, except as modified in the following subsections.

2.02 CONCRETE:

Concrete shall conform to Concrete Class Use Table, Section 201-1, of the Standard Specifications. ~~and shall be a 5-sack mix, with a maximum 4 inch slump, 2,000 pounds per square inch ultimate compressive strength at 28 days.~~ No admixtures, other than integral color admixture, will be allowed.

2.03 INTEGRAL COLOR: (MATCH EXISTING)

The required color shall be:
by L. M. Scofield, or City approved equal. Color admixture is to be added to the concrete at the batching plant per the manufacturer's printed instructions.

PART 3 - EXECUTION

3.01 GENERAL:

All work shall conform to the requirements of Section 303 of the Standard Specifications.

Install concrete and cement finish work true to lines, dimensions and levels.

3.02 PLACING CONCRETE:

Transport, place and spread in a manner to prevent segregation of aggregate. Reinforcing shall be supported by metal or plastic chairs; concrete supports shall not be used. Reference Section 303-1.7.1, 303-6.2.

3.03 CONCRETE FINISH:

While the concrete is still in the plastic stage of set, the forming tools shall be applied to make the patterned surface. The pattern used shall be:
All per Standard Spec's Section 303-6.4.

A pigmented, heavy duty wax curing and finishing compound shall be applied. The wax compound in the matching color shall be applied uniformly in accordance with manufacturer's printed instructions.

The sealed surface shall be polished using a fine brush which removes residual dust from the surface.

Protect all finished concrete from graffiti. Contractor shall be responsible for providing concrete watchmen. A graffitied finish will not be acceptable.

Remove and replace defective concrete with new materials. Permission to patch any defective area shall not be a waiver of the Park and Recreation Department's right to require complete removal of defective work if patching does not restore quality and appearance of work.

No advertising impression, stamp, or mark of any description other than the specified pattern will be permitted in the cement finish.

3.04 CURING:

Shall be performed per Standard Specification Section 303-6.5.

END OF SECTION

L BOMANITE SPECIFICATION

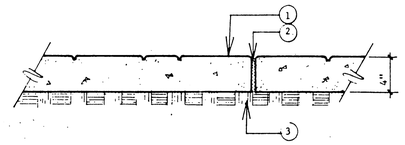

FOR SPECIFICATION REFER TO BOMANITE SPECS
SECTION 03356 THIS SHEET LETTER 'L'

LEGEND

1. BOMANITE STAMPED CONCRETE.
   PATTERN: RUNNING BOND (MATCH EXISTING)
   COLOR: TO MATCH EXISTING
2. 1/2" FELT EXPANSION JOINT. SEE CONSTRUCTION PLAN FOR LOCATIONS.
3. COMPACTED SUBGRADE

NOTE
1. CONTRACTOR SHALL PROVIDE 1/2" FELT EJ @ BACK OF CURBS (TYPICAL).
2. CONTRACTOR SHALL PROVIDE CITY INSPECTOR W/ 3' SQUARE TEST PANEL OF CONCRETE COLOR & PATTERN-PANEL COLOR SHALL BE CURED FOR 4 ~~8~~ WEEKS MIN. PRIOR TO SUBMITTAL. NO CONCRETE SHALL BE INSTALLED PRIOR TO WRITTEN ACCEPTANCE OF TEST PANEL BY CITY FORCES.

G BOMANITE

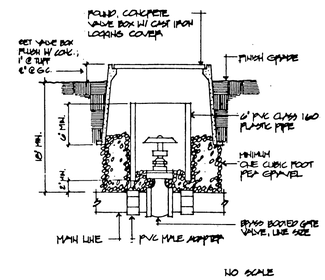

D GATE VALVE

GENERAL PLANTING NOTES

1) Contact the Park Project Inspector at 787-7223 48 hours prior to installing any plant material.
2) Trees planted in turf areas shall be maintained with a minimum 12" radius around tree free from turf throughout the maintenance period.
3) Watering basins may be removed after the maintenance period.
4) For staking information as applicable, refer to standard staking detail.
5) For guying information as applicable, refer to standard guying detail.
6) For specification information, refer to City of Riverside Park and Recreation Department Standard Specifications sections 02480/02401.
7) Provide Fertilizer Tablets as follows:

1 gallon plant	2 tablets
5 gallon plant	3 tablets
15 gallon plant	5 tablets
24" box plant	8 tablets

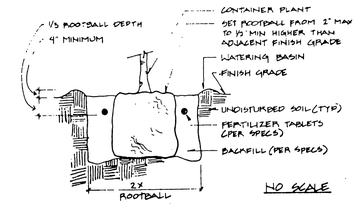

A SHRUB/TREE PLANTING

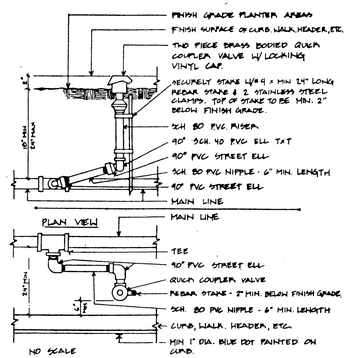

E QUICK COUPLING

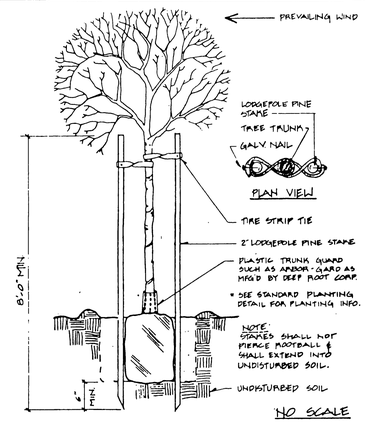

B TREE STAKING

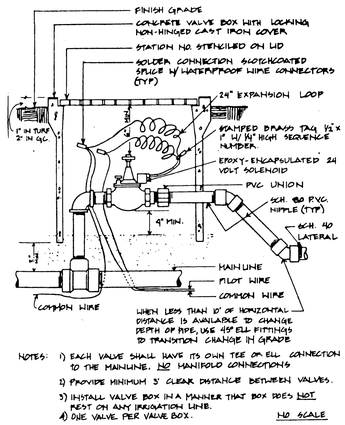

NOTES:
1) EACH VALVE SHALL HAVE ITS OWN TEE OR ELL CONNECTION TO THE MAINLINE. NO MANIFOLD CONNECTIONS
2) PROVIDE MINIMUM 3' CLEAR DISTANCE BETWEEN VALVES.
3) INSTALL VALVE BOX IN A MANNER THAT BOX DOES NOT REST ON ANY IRRIGATION LINE.
4) ONE VALVE PER VALVE BOX.

NO SCALE

F REMOTE CONTROL VALVE

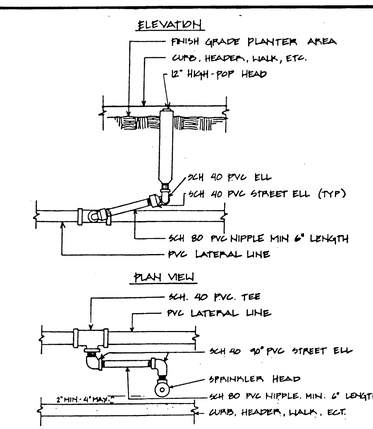

C 12" POP-UP SHRUB HEAD

REGISTERED LANDSCAPE ARCHITECT
RICHARD A. POLHAMUS
2782
STATE OF CALIFORNIA
Signature
11/6/91
Date

CLOSSON & CLOSSON
LANDSCAPE ARCHITECTURE
1355 West Katella Avenue, Suite 230, Orange, CA 92667, 714-639-2252

11/06/91

MARK	REVISIONS	APPR	DATE
	12/20/91		

DESIGNED BY ____ DRAWN BY ____ CHECKED BY ____

CITY OF RIVERSIDE, CALIFORNIA
DEPARTMENT OF PUBLIC WORKS

APPROVED BY	BY	DATE
PRINCIPAL ENGINEER		2/19/92
PARK DEPARTMENT		2-7-92
TRAFFIC DIVISION	—	—
CHIEF P W ENGR		2/19/92

APPROVED BY
DIRECTOR OF PUBLIC WORKS
DATE 2/19/92

LANDSCAPE ARCHITECTURAL PLANS FOR
COLLEGE PARK VILLAS MEDIANS
R-28-889 & PRD-4-901
CONST./IRR/PLANTING DETAIL

PROJECT NO R3236L
SHEET L-3 OF 6
FILE NO

PC 3327-M

INDEXED 4-2-92 LH

91-051.01

SECTION 02480 - PLANTING

PART 1 - GENERAL

1.01 RELATED DOCUMENTS:

The provisions of the "Standard Specifications for Public Works Construction" shall apply except as modified herein.

1.02 SCOPE:

The work required is indicated on the drawings and includes, but is not necessarily limited to: soil preparation; finish grading (as distinguished from fine grading per Section 02210); planting trees; guying and staking trees; ~~planting shrubs and groundcover~~; hydroseeding turf; soil erosion control; maintenance; ~~plant~~ establishment; guarantees; and replacements.

1.03 SOILS TEST:

The Contractor shall notify the Park Projects Inspector upon completion of fine grading and prior to commencement of soil preparation work. The City will obtain agronomic soils tests for all planting areas after completion of fine grading and prior to start of soil preparation work. Tests will be performed by an approved agronomic soils testing laboratory and will include a fertility and suitability analysis with written recommendations for soil preparation, planting backfill mix, auger hole requirements, and post plant fertilization program. The soils report recommendations shall take precedence over the minimum amendment and fertilizer application rates specified herein only when they exceed the specified minimums. Contractor shall allow a minimum two week period for the soils testing work commencing upon acceptance of the fine grading work per Section 02210 by the Park Projects Inspector.

1.04 GUARANTEE:

The guarantee provisions of the Special Provisions are supplemented as follows as they pertain to the tree planting portion of the work:

A. All trees installed under the contract shall be guaranteed against any and all poor, inadequate or inferior materials and/or workmanship for a period of one (1) year following final acceptance.

B. During the guarantee period, any trees found to be dead, missing, or in poor condition shall be replaced by the contractor within ten (10) days of written notification. Park and Recreation Department shall be the sole judge as to the condition of the trees.

C. Replacement shall be made in accordance with City standards.

D. Material and labor involved in replacing trees shall be provided by the contractor at no additional cost to the City.

1.05 INSPECTIONS:

Inspections will be required. The Contractor shall contact the Park Projects Inspector at least 48 hours (2 working days) in advance of an anticipated inspection. An inspection will be required at each of the steps listed below:

A. Upon completion of fine grading and prior to commencement of soil preparation, for acceptance of fine grading work and taking of soils samples.

B. Inspection of completed finish grading work following soil preparation work.

~~C. When container plants and/or bare root stock are spotted for planting, but before planting holes are excavated.~~

D. When planting and all other indicated or specified work has been completed.

E. During application of pre-emergent chemical.

F. At start of plant establishment period.

G. At end of the plant establishment period, prior to final acceptance of the project for maintenance by the City, this acceptance for maintenance will be confirmed in writing by the Park and Recreation Department.

1.06 SUBMITTALS:

A. The following written certifications are required to be submitted to the Park Projects Inspector upon delivery of the respective materials to the job site:

Total Quantity of commercial fertilizers, by type
Total Quantity of soil amendments and conditioners, by type
Total Quantity of seed, by type
Total Quantity of mulch
Total Quantity of iron sulphate

1.07 PLANT ESTABLISHMENT PERIOD:

The length of the Plant Establishment Period shall be as specified in Section 6-7.4 of the Special Provisions; see also Subsection 3.11 of this section regarding start of plant establishment period.

PART 2 - MATERIALS

2.01 GENERAL:

All materials shall conform with Section 212 of the Standard Specifications except as modified herein.

2.02 FERTILIZER, SOIL AMENDMENTS AND CONDITIONERS:

Add the following to Standard Specifications Section 212-1.2.3:

A. Planting Tablets: Tightly compressed long-lasting, slow-release fertilizer tablets weighing 21 grams, with a potential acidity of not more than 5 percent by weight and having an analysis of 20-10-5 derived from the sources listed in the following guaranteed analysis:

GUARANTEED ANALYSIS

Total Nitrogen (N) 20%
Derived from urea formaldehyde
7.0% water soluble nitrogen
13.0% water insoluble nitrogen

Available Phosphoric Acid (P_2O_5). 10%
Derived from calcium phosphate

Soluble Potash (K_2O). 5%

Combined Calcium (Ca). 2.6%
Derived from calcium phosphates

Combined Sulfur (S). 1.6%
Derived from ferrous and potassium sulfates

Iron (expressed as elemental Fe) 35%
Derived from ferrous sulfate

B. Commercial fertilizer shall bear the manufacturer's guaranteed statement of analysis and shall meet the following minimum requirements: 16% nitrogen, 6% phosphoric acid, and 8% potash.

C. Organic Soil Amendment:

Shall be type 1 organic soil amendment, wood based product, nitrogen stabilized, and free of foreign matter.

D. Soil Conditioners:

Add to Standard Specifications, new Section 212-1.2.6: Inorganic conditioners shall be agricultural grade gypsum, soil sulfur and iron sulfate. Iron sulphate shall be ferric sulphate or ferrous sulphate in pelleted or granular form containing not less than 18.5% iron, expressed as metallic iron, and shall be registered as an agricultural mineral with the State Department of Food and Agriculture in compliance with Chapter 5 "Fertilizing Materials", of Division 7 of the Food and Agriculture Code of California, commencing at Section 14501.

2.03 SEED:

Add the following to Standard Specifications Section 212-1.3:

Turf Seed Mix	Proportion by weight	Purity	Germination
Perennial Rye (50% 'Penn Fine', 50% 'Derby')	20%	95%	90%
PJ Bluegrass (50% 'Rugby' 50% 'Parade')	60%	98%	80%
Un-Hulled Bermuda (Certified Arizona Common)	20%	98%	85%

(Note: For applications in May through September, use Hulled Bermuda.)

Seeding rate: 218 pounds per acre (5 pounds per 1,000 square feet)

2.04 HYDROSEEDING MATERIALS:

Add the following to Standard Specifications Section 212-1.3:

Water: All water used for hydroseeding shall be potable domestic water. See General Provisions section 7-8.5 regarding availability of water and temporary construction meter and charges for water drawn from City fire hydrants.

Seed: Turf seed mix as specified.

Fiber Mulch: Shall be produced from cellulose such as wood pulp or similar organic material and shall be of such character that it will disperse into a uniform slurry when mixed with water. The fiber shall be of such character that when used in the applied mixture, an absorptive or porous mat, but not a membrane, will result on the surface of the ground. Materials which inhibit germination or growth shall not be present in the mixture.

Binding Agent: Shall be a dry powder organic concentrate. Ecology Controls ~~TM Binder or City approved equal.~~ ~~Fertilizer Company, Anaheim, CA 714/632-9315~~

Fertilizers:

A. Controlled Release Fertilizer (CRF) shall have an analysis of 17-7-10 (+Iron), 9-12 mo. formulation resin coated prills, "Sierrablen" as manufactured by Grace Sierra Chemical Co., Milpitas, CA 1-800-492-8255 or City approved equal.

B. Single super phosphate shall have an analysis of 0-18-0, and shall be as manufactured by Grace-Sierra, or City approved equal.

PART 3 - EXECUTION

3.01 GENERAL:

All work shall conform with Section 308 of the Standard Specification, except as modified herein.

At the contractor's option, subject to the Park Project Inspector's acceptance of the material available and the appropriateness of the planting season, bare root stock may be substituted for 15 gallon and 24" box tree species specified if commercially available as bare root plantings and provided the minimum caliper and height requirements of Subsection 2.05 Subparagraph D above are met, all at no change in contract price.

3.02 WEED CONTROL MEASURES:

Add the following to Standard Specifications Section 308-2.4:

A. Upon completion of all fine grading work per Section 02210 Grading, and prior to soil preparation, perform weed control measures as follows:

1. Irrigate all areas designated to be planted for a minimum of 10 minutes per setting, two settings per day for seven days to germinate all weed seed possible.

2. Apply a contact weed killer and allow sufficient time to obtain complete kill of all weeds germinated.

3. Repeat step one above.

4. Repeat step two above.

3.03 SOIL PREPARATION:

Add the following to Standard Specifications Section 308-2.3:

A. All fine grading and mounding per Section 02210 and weed control measures shall be completed prior to soil preparation.

B. This work shall not commence until the agronomic soils test has been completed. Should 30 calendar days elapse between completion of soil preparation and commencement of planting, all areas shall be prepared again.

C. Planting areas with slopes 3:1 and steeper shall not be soil prepared. In lieu of soil preparation, such slopes will require fertilizer tablets for all plantings per Section 3.C.7.c. below. In all planting areas with gradients less than 3:1, a layer of soil amendments shall be spread and rototilled into the soil to a minimum depth of 4 inches, or as recommended by the soils report, so that the soil shall be loose, friable, and free from rocks, sticks, and other objects undesirable to planting.

D. The following soil amendments shall be added per 1,000 square feet to all planting areas with gradients less than 3:1 (agronomic soil test recommendations shall take precedence where these minimum amounts are exceeded):

(1) 6 cubic yards Type I organic soil amendment.

(2) 15 pounds commercial fertilizer.

(3) 100 pounds gypsum.

(4) Soil sulfur per soils report.

3.04 FINISH GRADING:

The Contractor shall finish grade all planting areas filling as needed or removing surplus dirt, raking to remove all rocks and debris over 1 inch in diameter, and floating to a smooth uniform grade. All areas shall slope to drain. Flow lines shall be established to ~~adjacent~~ roads, curbs, swales, and/or sidewalks as shown on the plans and as directed. All fill material placed within the top 12" from finish grade elevations in all planting areas shall be topsoil.

All landscape areas shall be finish graded, (as distinguished from fine grading specified in Section 02210) to "dress out", maintain, and/or re-establish finish grades and flow lines as approved prior to amending the soil. Contractor shall call for inspection upon completion of finish grading work. Contractor shall not proceed with planting work until finish grades have been inspected and accepted by the Park Projects Inspector.

C. Add the following to Standard Specifications Section 308-4.7:

(1) On slopes exceeding 3:1 ratio, apply 5 gram Agriform tablets, one per plant in lieu of soil preparation work.

(2) Mulch and fertilize groundcover areas using 1.5 cubic yards of wood shavings and 5 lbs. of the specified commercial fertilizer per 1,000 square feet. Repeat fertilization at 30 day intervals throughout the duration of the contract up to 4 applications, after which decrease frequency to once every 90 days.

(3) All groundcover and bare dirt areas are to be treated with a pre-emergent chemical (subject to approval by the Park Inspector prior to application). Chemicals are to be applied by a licensed Pest Control Agent. This treatment shall be applied at the following times during the contract: a) before planting, b) at beginning of plant establishment period, and c) at end of plant establishment period. The Park Projects Inspector, (714) 782-5223, shall be given a minimum of 48 hours (2 working days) notice prior to each application. No chemicals shall be applied other than in the presence of the Inspector.

3.09 TURF PLANTING:

Add the following to Standard Specifications Section 308-4.8.2, b:

Mixing of hydroseed slurry: Mixing shall be performed in a tank, with a built-in continuous agitation and recirculation system of sufficient operating capacity to produce a homogeneous slurry of fiber, M-Binder, seed, fertilizer and water in the designated unit proportions.

Fiber Mulch	1,500 lbs./acre
Fertilizers:	
CRF	870 lbs./acre (20#/1000 SF)
Single superphosphate	200 lb./acre (4 1/2#/1000 SF)
Seed	as specified in Subsection 2.03 above
Binding Agent:	**100 lbs./acre (use on all slopes 5:1 and steeper)**
Water	3,000 gal./acre (maximum)
Agricultural Grade Gypsum	500 lb./acre

With agitation system operating at part speed, water shall be added to the tank, good recirculation shall be established. Materials shall be added in such a manner that they are uniformly blended into the mixture in the following sequence (assumes a nominal 1500 gallon tank):

When tank is 1/3 filled with water:

Add binding agent - 1/2 acre requirement.
Add 5 - 50 pound bales of fiber mulch.
Add seed - 1/2 acre requirement.
Add fertilizer - 1/2 acre requirement.

Agitate mixture at full speed when the tank is half-filled with water.

Add remainder fiber mulch requirement, 10 bales, before tank is 3/4 full. Add remainder fertilizers, seed and gypsum. Slurry distribution should begin immediately.

Area to be hydroseeded shall be moistened to a depth of six inches just prior to application.

Application: Hydroseed slurry shall be applied under high pressure evenly and result in a uniform coat on all areas to be treated. Care shall be exercised to assure that plants in place are not subjected to the direct force of the application. Slurry shall be immediately removed from walks, structures, plants, etc., that are inadvertently sprayed.

All bare spots shall be reseeded by the Contractor within 10 days. The Contractor shall be responsible for all reseeded areas for as long after seeding as necessary until acceptable germination and establishment is realized and approved by the City.

The slurry shall not be sprayed on undesignated areas. Any slurry spilled or sprayed into areas other than those designated to receive spray shall be cleaned up at the Contractor's expense to the satisfaction of the City.

3.10 WATERING:

Add the following to Standard Specifications Section 308-4.9.5:

A. It shall be the Contractor's responsibility to maintain a balanced watering program to ensure proper growth until final acceptance of the work.

B. Immediately after planting, apply water to each plant. Apply water in a moderate stream in the planting hole until the material about the roots is completely saturated from the bottom of the hole to the top of the ground.

C. Apply water in sufficient quantities and as often as seasonal conditions require to keep the planted areas moist at all times, well below the root system of plants.

D. Irrigation:

(1) Contractor shall properly and completely maintain the irrigation system. A balanced water program shall be maintained to ensure proper germination and growth until final acceptance of the work. Plants which cannot be watered sufficiently with the irrigation system shall be watered by means of a hose.

(2) All controllers are to have each station individually adjusted on a weekly basis. System shall be set considering the application rate each area is capable of receiving. The system shall operate on short intervals, with the cycle repeating at a later time to reduce runoff.

3.11 MAINTENANCE:

Amend the Standard Specifications Section 308-6 to read: All areas within the work limits of this contract shall be maintained by the contractor for the duration of the contract until final acceptance.

3.12 START OF PLANT ESTABLISHMENT: Add the following to Standard Specifications Section 308-6:

A. Criteria for Start of Plant Establishment Period:

(1) The plant establishment period shall not start until all elements of the project that impact the landscape are completed in accordance with the contract documents. Projects will not be segmented into phases.

(2) Permanent power to remote controllers shall be established.

(3) The plant establishment period for the project shall not begin until after the first mowing of the newly planted turf areas. For Plant Establishment purposes "First Mowing" is defined as the first mowing after the point in time that a minimum of 85% of the turf area has attained a minimum height of 2". Until the above specified percentage of turf area is established and mown, contractor shall mow as necessary to maintain those portions of turf exceeding 2" at the mowing height of 1 1/2 inches. At no time shall any turf exceed 3" in height.

(4) Written acceptance of the City must be obtained to start the plant establishment period.

(5) If the project maintenance fails to continuously meet standards required, the plant establishment period "day count" will be suspended and will not recommence until the Contractor has corrected all deficiencies.

3.13 MAINTENANCE TASKS: Add the following to Standard Specifications Section 308-6:

A. General:

During the contract period provide all watering, weeding, mowing, fertilizing and cultivation and spraying necessary to keep the plants and turf in a healthy growing condition and to keep the planted areas neat, edged, and attractive. All shrubs planted by the contractor shall be pinched and pruned as necessary to encourage new growth and to eliminate rank sucker growth. Old wilted flowers and dead foliage shall be immediately pinched or cut off. Do not prune trees without written approval of the City.

B. Iron Chlorosis:

After planting and during the plant establishment period, in the event that any plantings exhibit iron chlorosis symptoms, apply FE 138 Geigy or equivalent at manufacturer's recommended rates.

C. Replacement Plantings:

During the plant establishment period, should the appearance of any planting installed by the Contractor indicate weakness, that plant shall be replaced immediately with a new, healthy plant. At the end of the plant establishment period, all plant materials shall be in a healthy, growing condition and spaced as indicated on the plans.

D. Fertilization:

The Contractor shall apply commercial fertilizer to all turf areas at a rate of 10 pounds per 1,000 square feet, and all groundcover areas at a rate of 5 pounds per 1,000 square feet, at 30-day intervals, for 3 applications as a minimum, above and beyond the original soil preparation application.

E. Planting Establishment:

All planting areas that do not show a prompt establishment of plant material shall be replanted at 10-day intervals until the plant material is established. If a good rate of growth has not been demonstrated within 30 days of first planting/hydroseeding, the Contractor shall be responsible to determine the appropriate horticultural practices necessary to obtain good growth. The Contractor shall obtain agronomic soils testing of all areas not showing good growth and shall provide copies of the test results to the City to verify the appropriateness of all maintenance work performed. If additional soil amendments are needed, up to a maximum 25% beyond the application rate specified, such amendments shall be provided by the Contractor at no additional cost to the City.

F. Grading and Drainage:

During the plant establishment period all flow lines shall be maintained to allow for free flow of surface water. Displaced material which interferes with drainage shall be removed and placed as directed. Low spots and pockets shall be graded to drain properly. Jute netting shall be installed at flow lines and other locations where erosion is evident, when directed by the Park Projects Inspector.

(1) Damage to planting areas shall be repaired immediately and throughout the plant establishment period. Depressions caused by vehicles, bicycles, or foot traffic shall be filled and leveled. Replant damaged areas.

(2) All paved areas shall be washed and maintained in a neat and clean condition at all times.

(3) All subsurface drains and inlets shall be periodically cleared of debris, leaves and trash and flushed with clear water to avoid build up of silt and debris.

(4) Debris and trash shall be removed from the site daily

G. Disease and Pest Control:

Add the following to Standard Specifications Section 308-6: Throughout the plant establishment period, all plants shall be maintained in a disease and pest free condition. A licensed pest control operator shall be retained by the Contractor to recommend and apply all pesticides, herbicides, and fungicides. Exterminate gophers, moles, and all other rodents, and repair damage.

3.14 END OF PLANT ESTABLISHMENT PERIOD:

A. When the contractor believes he has completed the plant establishment period and the entire project is ready for final acceptance, he shall request inspection of the project. The City will inspect the project for final acceptance. Deficiencies noted during inspection shall extend the plant establishment period until all are corrected.

B. All planting areas shall show a good rate of growth and shall be well established "filled in" plantings free of voids. Bare areas will be unacceptable. Contractor shall provide sod or plantings from flats as necessary to fill in all bare areas. Such sod or plantings shall be planted a minimum of 10 days prior to the end of the plant establishment period and shall have roots "knit-in" to the native soil.

C. Final acceptance shall occur only upon written acceptance of the project for maintenance by the City.

3.15 CLEAN UP:

Upon completion of the work, the Contractor shall smooth all ground surfaces; remove excess materials, rubbish, debris, etc.; sweep adjacent streets, curbs, gutters; wash down all walkways, and trails; and remove construction equipment from the premises.

REGISTERED LANDSCAPE ARCHITECT
RICHARD A. POLHAMUS
2782
STATE OF CALIFORNIA
Signature 11/6/91 Date

CLOSSON & CLOSSON
LANDSCAPE ARCHITECTURE
1355 West Kimballs Avenue, Suite 230, Orange, CA 92667, 714-639-2252

11/06/91

MARK	REVISIONS	APPR.	DATE
	12/20/91		

DESIGNED BY ____ DRAWN BY ____ CHECKED BY ____

CITY OF RIVERSIDE, CALIFORNIA
DEPARTMENT OF PUBLIC WORKS

APPROVED BY	BY	DATE
PRINCIPAL ENGINEER		7/17/92
PARK DEPARTMENT		7-7-92
TRAFFIC DIVISION	—	—
CHIEF P.W. ENGR.		7/18/92

APPROVED BY
DIRECTOR OF PUBLIC WORKS
DATE 2/19/92

PLANTING SPECIFICATIONS
~~LANDSCAPE ARCHITECTURAL PLANS~~
FOR
COLLEGE PARK VILLAS MEDIANS
R-28-889 & PRD-4-901

PROJECT NO. R3236L

SHEET L-4 OF 6

FILE NO.:

PC 3327-M

INDEXED 4-1-92 LH

91-051.01

SECTION 02441 - IRRIGATION

PART 1 - GENERAL

1.01 RELATED DOCUMENTS:

The provisions of the "Standard Specifications for Public Works Construction", current edition, shall apply except as modified herein.

1.02 SCOPE:

A. General:

The work of this section shall include the furnishing of all labor, materials, equipment and services necessary to provide complete operating irrigation systems, ~~including 120 volt electrical service to the controller, all as shown on the drawings and as specified.~~

B. Related Work Specified Elsewhere:

Site Clear and Grub	02110
Site Grading	02210
Selected Site Demolition	02111
Planting	02480
Electrical	16530

1.03 SUBMITTALS:

A. Materials List:

Contractor shall submit a complete materials list for approval by the City prior to performing any work. Catalog data and full descriptive literature must be submitted whenever the use of items different than those specified is requested. Notarized certificate must be submitted by plastic pipe and fitting manufacturer indicating that material complies with specifications, unless material has been previously approved.

Material list shall be submitted using the following format:

Item	Description	Manufacturer	Model No.
1	Pressure Supply Line	Lasco	Sch. 40
2	Lawn Head	Rainbird	2400
etc.	etc.	etc.	etc.

B. "Record" Prints:

(1) Record accurately on one set of blue-line prints all changes in the work constituting departures from the original contract drawings, including changes in pressure and non-pressure line locations.

(2) The changes and dimensions shall be recorded in a legible and workmanlike manner to the satisfaction of the City. Prior to final inspection of work, submit record prints to City for approval.

(3) Dimension from two permanent points of reference (buildings, monuments, sidewalks, curbs, pavement, etc. Data to be shown on record prints shall be recorded day-to-day as the project is being installed.

(4) Show locations and depths of the following items:

a. Point of connection.

b. Routing of sprinkler pressure lines (dimension maximum 100 feet along routing).

c. Gate valves.

d. Sprinkler control valves.

e. Quick coupling valves.

f. Routing of control wires.

g. Related equipment (as may be directed).

(5) Maintain record prints onsite at all times.

1.04 INSPECTIONS:

A. Inspections will be required for:

(1) Pressure test of irrigation main line.

(2) Coverage test.

(3) Final inspection/start of maintenance.

(4) Final acceptance.

B. Inspection Requests:

Contractor shall notify the Park Projects Inspector in advance for requesting all inspections as follows:

Pressure supply line installation and testing - 36 hours (1-1/2 working days)
System layout - 36 hours (1-1/2 working days)
Coverage tests - 36 hours (1-1/2 working days)
Final inspection - 48 hours (two working days)

When inspections have been conducted by other than the Park Projects Inspector, the Contractor shall show evidence of when and by whom these inspections were made.

No inspection will commence without "record" prints. In the event the Contractor calls for an inspection without up to date "record" prints, without completing previously noted corrections, or without preparing the system for inspection, the inspection will be cancelled and the Contractor back charged for the direct costs of all City personnel time and consultant time lost.

C. Closing in uninspected work:

Do not allow or cause any of the work of this section to be covered up or enclosed until it has been inspected, tested and approved by the City.

D. Coverage test:

When the sprinkler system is completed, Contractor shall perform a coverage test in the presence of the City to determine if the water coverage for planting areas is complete and adequate. This test must be accepted by the City before planting can commence.

E. Hydrostatic test:

(1) Prior to the installation of any valves, all pressure lines shall be tested under a hydrostatic pressure of 150 psi for a period of not less than two hours, with all ends of lines capped and the line fully charged with water after all air has been expelled from the line.

(2) All hydrostatic tests shall be made in the presence of the Park Projects Inspector or his designated representative. No pressure line shall be backfilled until it has been inspected, tested, approved in writing, and the mainline and valve locations have been noted on the "as-built" record drawings.

(3) Contractor shall furnish necessary force pump and all other test equipment.

B. Operation and Maintenance Manuals:

Within a minimum of 14 calendar days prior to acceptance of construction, prepare and deliver to the City all required descriptive materials, properly prepared in two individually bound copies of the operation and maintenance manual. The manual shall describe the material installed and shall be in sufficient detail to permit operating personnel to identify, operate, and maintain all equipment. Spare parts lists and related maufacturer's information shall be included for each equipment item installed. Each complete, bound manual shall include the following information:

(1) Index sheet stating Contractor's address and telephone number, including names and addresses and telephone numbers of local manufacturer's representatives.

(2) Complete operating and maintenance instructions on all major equipment.

C. Materials to be furnished:

(1) Supply as part of this contract the following items:

a. 4% additional sprinkler heads of each type and spray pattern shown.

b. Two (2) wrenches for disassembly and adjustment of each type sprinkler head installed.

~~c. Two keys for each automatic controller.~~

~~d. Two couplers with a 3/4" bronze hose bib, bent nose type with hand wheel and two coupler keys.~~

e. One valve box cover key.

f. "As-built" record drawings.

~~g. Remove and turn over backflow device valve handles.~~

~~h. Documentation of Water Department's inspection and acceptance of backflow device.~~

D. The above items shall be turned over to the City at the conclusion of the project - final inspection.

1.06 GUARANTEE:

A. General:

The entire sprinkler system, including all work done under this contract, shall be guaranteed against all defects and fault of material and workmanship for a period of one (1) year following the filing of the Notice of Completion. All materials used shall carry a manufacturer's guarantee of one (1) year.

Should any problem with the irrigation system be discovered within the guarantee period, it shall be corrected by the Contractor at no additional expense to the City within ten (10) calendar days of receipt of written notice from the City. When the nature of the repairs as determined by the City constitute an emergency (e.g. broken pressure line) the City may proceed to make repairs at the Contractor's expense. Any and all damages to existing improvement resulting either from faulty materials or workmanship, or from the necessary repairs to correct same, shall be repaired to the satisfaction of the City by the Contractor, all at no additional cost to the City.

B. Form of Guarantee:

Guarantee shall be submitted on Contractors own letterhead as follows:

GUARANTEE FOR SPRINKLER IRRIGATION SYSTEM

We hereby guarantee the sprinkler irrigation system we have furnished and installed against defects in materials and workmanship, ordinary wear and tear and unusual abuse, or neglect excepted, and that the work has been completed in accordance with the drawings and specifications. We agree to repair or replace any or all of our work, together with any other adjacent work which may be dislocated by so doing, that may prove to be defective in its workmanship or materials within a period of one (1) year from date of acceptance of the above named project by the City of Riverside, California, at no additional cost to the City. We shall make such repairs or replacements within 14 calendar days following written notification by the City. When the immediate repair or replacement of the work is necessary to ensure the public safety and welfare, which would be endangered by continued usage of the facility, such circumstance will be deemed an operational emergency. In the event of such an emergency after the City contacts our firm and after authorizing 24 hours to initiate repairs, if we fail to initiate and diligently complete such repairs in a timely manner, the Director may direct City forces to perform such functions as he may deem necessary to correct the work and immediately place the facility back in operational condition. If such procedure is implemented, we shall bear all expenses incurred by the City. In all cases, the judgement of the Director shall be final in determining whether an operational emergency exists. In the event of our failure to make such repairs or replacements within the time specified after receipt of written notice from the City (other than an operational emergency), we authorize the City to proceed to have said repairs or replacements made at our expense and we will pay the costs and charges therefore upon demand.

PROJECT: _____
LOCATION: _____

SIGNED: _____
ADDRESS: _____

PHONE: _____

C. After the system has been completed, the Contractor shall instruct the Parks Department Representative in the operation and maintenance of the system and shall furnish a complete set of operating instructions.

D. Any settling of trenches which may occur during the one-year period following acceptance shall be repaired to City's satisfaction by the Contractor without any additional expense to the City. Repairs shall include the complete restoration of all damage to planting, paving or other improvements of any kind as a result of the work.

PART 2 - MATERIALS

2.01 GENERAL:

All materials shall conform with Section 212 of the Standard Specification except as modified herein.

2.02 PIPE AND FITTINGS:

A. Pipe - General:

(1) Pressure supply lines 2 inches in diameter and up to 8 inches in diameter shall be either Class 315 solvent weld PVC or Class 200* rubber gasket type PVC. Solvent weld and ring type pipe shall not be used together on the same pressure supply line.

(2) Pressure supply lines 1-1/2 inches in diameter and smaller shall be minimum schedule 40 PVC.

(3) Non-pressure lines shall be minimum Class 200 PVC.

C. Plastic Pipe:

Add the following to Standard Specifications Section 212-2.1.3: All plastic pipe shall bear the following markings: manufacturer's name, nominal pipe size, schedule or class, type of material, pressure rating in PSI, NSF seal of approval, and date of extrusion.

Amend Standard Specification Section 212-2.1.3 to read: All plastic pipe fittings shall be standard weight schedule 40 and shall be injection molded of an improved PVC fitting compound. All threaded plastic fittings shall have injection molded threads. No cut threads will be accepted on PVC pipe and fittings. All tees and ells shall be manufactured in injection molds that are side gated. All threaded nipples shall be standard weight schedule 80 with molded threads.

Amend first sentence of Standard Specification Section 212-2.1.4 to read: "All rubber gasket PVC pipe, couplings, and fittings shall conform to ASTM D 2241 Type 1, Grade 1, 2000-PSI design stress"; and add the following to the section: "Couplings, rubber gaskets, and fittings shall be as approved by the pipe manufacturer. Ring-type rubber gasket couplings shall permit a five (5) degree deflection of the pipe at each coupling (2-1/2 degrees each side) without exfiltration or infiltration, cracking or breaking."

2.03 VALVES AND VALVE BOXES:

A. Manual Control Valves:

Add the following to Standard Specifications Section 212-2.2.3: Anti-siphon-type valves shall be all bronze with swivel-type replaceable seating members and an approved vacuum breaker as an integral part of assembly.

B. Remote Control Valves:

Add the following to Standard Specifications Section 212-2.2.4: Valves shall be spring-loaded, self-cleaning, packless diaphram activated, of a normally closed type. Valves shall be of the same manufacturer and series as the automatic controller.

Valve solenoid shall be corrosion-proof and constructed of stainless steel molded in epoxy to form one integral unit, and shall be 24 volt A.C., 2.0 watt maximum (2" and smaller valves).

Valve shall close against flow without chatter and with minimum closing surge pressure (minimum 5 seconds closing time per valve).

Valve shall be completely serviceable in the field without removing valve body from line.

D. Gate Valves:

All gate valves shall be capable of withstanding a minimum working pressure of not less than 150 psi.

E. Valve Boxes:

Add the following to Standard Specifications Section 212-2.2.7: All remote control valve boxes shall be rectangular concrete boxes with non-hinged locking cast-iron covers. Valve station number shall be stenciled in two-inch-high (2") numerals on cover using epoxy resin base paint of a contrasting color. Gate valve boxes shall be round concrete boxes with non-hinged locking cast iron covers marked either "Gate Valve" or "G. V." with letters cast or tooled in the cover.

2.05 ELECTRICAL MATERIALS

A. Conduit:

Amend Standard Specifications Section 212-3.2.1 to read: Conduit below paving shall be schedule 40 PVC of sufficient size to carry all proposed wiring. Wiring shall be in a separate sleeve.

B. Wire:

Add the following to Standard Specifications Section 212-3.2.2:

All common wire shall be white with a colored stripe. Stripe color shall be different for each controller installed. All control wire shall be of one color other than white or green. A different color control wire shall be used for each controller installed.

C. Electrical Service:

Materials for electrical service shall comply with the standard specifications, governing utility agency standards, and requirements of all applicable codes.

2.07 IRRIGATION HEADS:

All irrigation heads shall be as shown on the plans and shall conform with Section 212-2.4 of the Standard Specifications.

PART 3 - EXECUTION

3.01 GENERAL:

All work shall conform with Section 308 of the Standard Specifications except as modified herein. No work of this section other than sleeving under pavement shall commence prior to the completion and acceptance of all grading work specified in Section 02210.

Add the following to Standard Specifications Section 308-5.1:

A. Irrigation System Design & Water Supply:

1) The irrigation system design is based upon an available water pressure of 75 p.s.i. at a flow rate of 31 g.p.m. Individual stations are designed to this minimum p.s.i. The system is also designed to withstand a maximum pressure of 200 p.s.i. Contractor shall verify the size of the existing water supply/meter and the existing operating water pressure at the water supply location shown on the drawings prior to starting construction. The contractor shall notify the Park Projects Inspector in writing of any discrepancies noted. Failure to provide such written notification may cause the contractor to provide for modifications to the irrigation system as necessary to provide for a fully operational system providing 100% coverage at the operating pressure available, all at no additional cost to the City.

2) Connection to, or the installation of, the water supply shall be at the location shown on the drawings. Minor changes caused by actual site conditions shall be made at no additional cost to the City.

C. Code Requirements:

Prior to all work of this section, the contractor shall carefully inspect the installed work of all other trades and verify that all such work is complete to the point where this installation may properly commence. Verify that the irrigation system may be installed in strict accordance with all pertinent codes and regulations, the original design, the referenced standards, and the manufacturer s recommendations.

In the event any equipment or methods indicated on the drawings or in the specifications is in conflict with local codes, immediately notify the Park Projects Inspector prior to installing the work. If this notification is not provided, the Contractor shall assume full responsibility for the cost of all revisions necessary to comply with all codes.

D. Grades:

Before starting work of this section, the contractor shall obtain the written acceptance of the City of the fine grades, and written authorization for the work of this section to proceed. The contractor is to keep within the specified material depths with respect to finish grade. Failure to obtain such written acceptance may subject the Contractor to adjusting the grades or depth of lines in order to achieve acceptable depths of cover, all as directed by the City and at no additional cost to the City.

E. Coordination with work of other trades:

Make all necessary measurements in the field to ensure precise fit of items in accordance the original design. The Contractor shall coordinate the installation of all irrigation materials with all other work. Special attention shall be given to coordination of piping locations versus tree and shrub locations and sleeve locations versus pavement installation to avoid conflicts.

F. The Contractor shall maintain record drawing blueprints on site at all times. Upon completion of the work, transfer all "as-built" information on changes and dimensions to reproducible sepia prints. The changes and dimensions shall be recorded in a legible and workmanlike manner, to the satisfaction of the Park Projects Inspector.

3.02 TRENCHING AND BACKFILLING:

A. Trenching:

(1) Add the following to Standard Specifications Section 308-2.2: Dig trenches and support pipe continuously on bottom of ditch. Where lines occur under paved areas, depth dimensions shall be considered below subgrade.

(2) Amend Standard Specifications Section 308-2.2, Subparagraph 2) to read: Water lines continuously pressurized - minimum 18 inches, maximum 24 inches. (These measurements are to be from subgrade elevation for piping under pavement.)

(3) Amend Standard Specifications Section 308-2.2, Subparagraph 3) to read: Lateral sprinkler lines - minimum 12 inches and maximum 16 inches.

(4) Add the following to Standard Specifications Section 308-2.2: Where it is necessary to excavate adjacent to existing trees, the contractor shall avoid injury to trees and tree roots. Excavation in areas where 2-inch and larger roots occur shall be done by hand. All roots 2 inches and larger in diameter shall be tunneled under and shall be heavily wrapped with wet burlap to prevent scarring or drying. Where trenching machine is run close to trees having roots smaller than 2 inches in diameter, the wall of the trench adjacent to the tree shall be hand trimmed, making a clean cut through the roots. Roots 1 inch and larger in diameter shall be painted with two coats of tree seal or approved equal. Trenches adjacent to trees shall be closed within 24 hours.

(5) Permanent Resurfacing: Add the following to Standard Specifications Section 308-5.1: All surface improvements damaged or removed as a result of the contractor's operations shall be reconstructed by the contractor to the same dimensions, except for pavement thickness, and with the same type materials used in the original work. Trench resurfacing shall be 1 inch greater in thickness than existing pavement. Concrete pavement shall be removed and replaced in "full panels" with no horizontal dimension less than five (5) feet. Contractor shall review the planned limits and lines of concrete removal and replacement with the Park Projects Inspector prior to sawcutting for removal work.

B. Backfill:

Amend Standard Specifications Section 308-2.2 to read: Backfill shall be uniformly tamped in 4-inch layers under and around the pipe for the full width of the trench and the full length of the pipe. Materials shall be sufficiently damp to permit thorough compaction, free of voids. Backfill shall be compacted to dry density equal to adjacent undisturbed soil and shall conform to adjacent grades.

Flooding in lieu of tamping is not allowed without specific prior written approval of the Soils Engineer and the Park Projects Inspector.

Under no circumstances shall the wheels of any vehicle not designed for the purpose of soils compaction be used to compact backfill.

3.03 PIPE INSTALLATION:

A. General: Add the following to Standard Specifications Section 308-5.2.1:

(1) Piping under existing pavement may be installed by jacking, boring, or hydraulic driving. However, no hydraulic driving is permitted under asphaltic concrete pavement.

(2) Cutting or breaking of existing pavement is not permitted except as approved by Park Projects Inspector. When approved, all necessary repairs and replacements will be made at no additional cost to the City.

(3) Carefully inspect all pipe and fittings before installation, removing all dirt, scale and burrs and reaming; install pipe with all markings up for visual inspection and verification.

~~(4) Contractor shall install concrete thrust blocking per the manufacturer's recommendations at all changes of direction and terminal points of pressure pipe.~~

(5) Parallel lines shall not be installed directly over one another. Provide a minimum of 12" horizontal separation for all parallel lines.

(6) For plastic-to-metal connections, work the metal connections first. Use a non-hardening pipe dope on all threaded plastic-to-metal connections, except where noted otherwise.

(7) All piping under pavement shall be sleeved using schedule 40 PVC sleeves. Each line shall be separately sleeved.

(8) Do not install multiple assemblies ("manifold") on plastic lines. Provide each equipment assembly (e.g. RCV, quick coupler, gate valve, head, backflow device) with its own connection to its service line.

B. Plastic Pipe: Add the following to Standard Specifications Section 308-5.2.3:

(1) Exercise care in handling, loading, unloading and storing plastic pipe and fittings, store plastic pipe and fittings under cover until ready to install; transport plastic pipe on a vehicle with a bed long enough to allow pipe to lay flat, avoid undue bending and any concentrated external load.

(2) 360° applicators shall be used to apply primer and solvent on pipe sizes 2-1/2 inches and larger.

3.05 VALVE AND VALVE BOX INSTALLATION:

Amend Standard Specifications Section 308-5.3 to read: Valves shall be the same size as the pipeline in which they are installed unless otherwise specified on plans. Valves shall be installed a minimum of three feet in horizontal distance apart, each with its own connection to the pressure main line.

Amend Standard Specifications Section 308-5.3 to read: Install quick couplers and valve boxes per Parks and Recreation Department standard details.

Add the following to Standard Specifications Section 308-5.3: Valves shall be installed in shrub areas whenever possible. ~~No valves or valve boxes other than quick coupler valves shall be installed within a designated athletic playing field.~~

3.06 SPRINKLER HEAD INSTALLATION:

Amend Standard Specifications Section 308-5.4.1 to read: Sprinkler heads shall be installed as designated on the drawings and per Parks and Recreation standard details. Upon coverage testing of the system if 100% coverage is not afforded by the system as designed, additional heads shall be added as necessary to achieve 100% coverage. Up to 5% of the total number of heads in the system are to be added at no additional cost to the City. If a greater number of heads is needed, cost shall be as negotiated by change order.

Following establishment of the turf, the irrigation system shall be programmed to operate during the periods of minimal use of the project area (i.e., 11:00 p.m. through 6:00 a.m.).

3.08 WIRING:

Add the following to Standard Specifications Section 308-5.5: All splice connections shall occur in a valve box. All wire runs between the valve and the controller shall be a continuous run with no splices unless noted otherwise on the plan.

All low voltage wiring splices shall be made-up as soldered connections, wrapped with a minimum of two (2) layers of electrical tape and sealed with Scotch-coat. Scotch-lok, Uni-pack, Penn-tite, or other similar type connectors are not acceptable.

3.09 FINISHING AND TESTING:

Add the following to Standard Specifications Section 308-5.6.2: Centerload all plastic pipe prior to pressure testing. Amend Standard Specifications Section 308-5.6.2 to read: Pressure test the mains - minimum 2 hours at 150 PSI. Add the following to Standard Specifications Section 308/5.6.2: The entire system shall be operating properly before any planting operations commence.

3.10 COMPLETION CLEANING:

Add the following to Standard Specifications Section 308: Upon completion of the work, Contractor shall smooth all ground surfaces, remove excess materials, rubbish, debris, etc., sweep adjacent streets, curbs, gutters, walkways and trails, and remove construction equipment from the premises.

** The contractor shall coordinate valve scheduling and operation time on the existing controller with the park projects inspector. If during the plant establishment period additional water is required the contractor shall supply supplemental irrigation (eg bleeding valves, quick coupler and hose, etc.) and request the park projects inspector to have city forces modify the controller schedule.

REGISTERED LANDSCAPE ARCHITECT
RICHARD A. POLHAMUS
2782
Signature
11/6/91
Date
STATE OF CALIFORNIA

CLOSSON & CLOSSON
LANDSCAPE ARCHITECTURE
1355 West Katella Avenue, Suite 230, Orange, CA 92667, 714-639-2252

11/06/91

MARK	REVISIONS	APPR	DATE
	12/20/91		

DESIGNED BY ____ DRAWN BY ____ CHECKED BY ____

CITY OF RIVERSIDE, CALIFORNIA
DEPARTMENT OF PUBLIC WORKS

	BY	DATE
APPROVED BY		
PRINCIPAL ENGINEER		2/13/92
PARK DEPARTMENT		2-7-92
TRAFFIC DIVISION		
CHIEF P W ENGR		2/18/92

APPROVED BY
DIRECTOR OF PUBLIC WORKS
DATE 2/19/92

IRRIGATION SPECIFICATIONS
LANDSCAPE ARCHITECTURAL PLANS
FOR
COLLEGE PARK VILLAS
MEDIANS
R-28-889 & PRD-4-901

PROJECT NO. R3236L
SHEET L-5 OF 6
FILE NO.

PC 3327-M

INDEXED 4-2-92 91-051.01

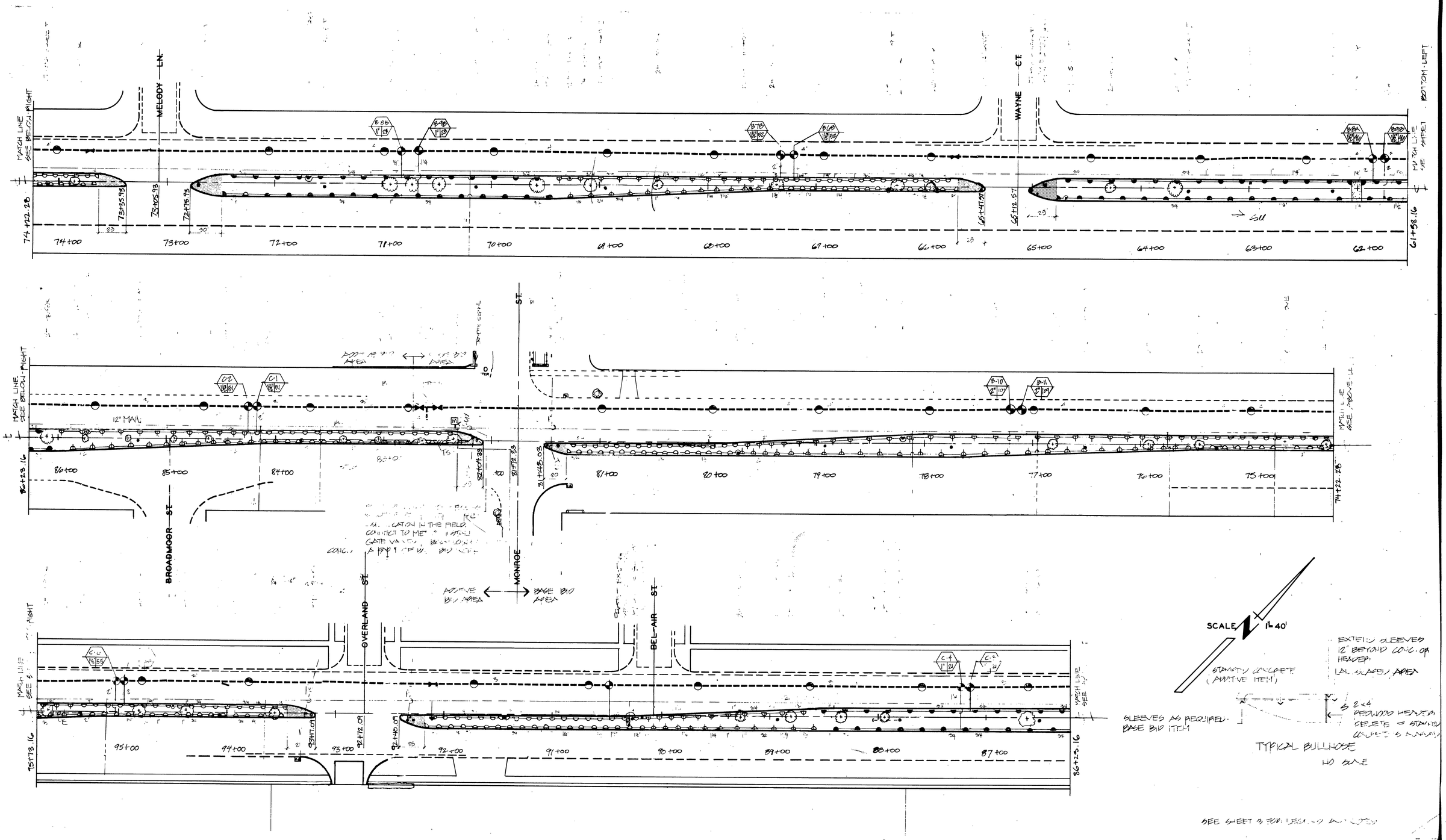

SEE SHEET 3 FOR LEGEND AND NOTES

REGISTERED LANDSCAPE ARCHITECT
RICHARD A. POLHAMUS
2762
11/6/91
STATE OF CALIFORNIA

CLOSSON & CLOSSON
LANDSCAPE ARCHITECTURE
1255 West Katella Avenue, Suite 230, Orange, CA 92667, 714-639-2252

91-051.01

MARK	REVISIONS	APPR.	DATE
	12/20/91		

DESIGNED BY ____ DRAWN BY ____ CHECKED BY ____

CITY OF RIVERSIDE
PUBLIC WORKS DEPARTMENT

APPROVED BY	DATE	BY
PRINCIPAL ENGINEER	2/13/92	
PARK DEPARTMENT	2-7-92	
TRAFFIC DIVISION	—	—
CHIEF P. W. ENGINEER	2/18/92	

APPROVED BY
PUBLIC WORKS DIRECTOR
DATE 2/19/92

LANDSCAPE ARCHITECTURAL PLAN FOR
R-28-889 & PRD-4-901
COLLEGE PARK VILLAS MEDIANS
IRRIGATION REF. SHEET

HORIZ. SCALE: 1" =
VERT. SCALE: 1" =

ACCOUNT NO. R3236L

SHEET L-6 OF 6

PC 3327-M

INDEXED 4-1-92 HH