10.45 FEET METAL BENCH
11. METAL TRASH UNIT
12. EXPANSION JOINT
13. TOOLED SCORE JOINT
14. CONCRETE CURB AND GUTTER PER CITY OF RIVERSIDE PUBLIC WORKS
15. LANDSCAPE PARKWAY
16. *8" THICK STAMPED CONCRETE CROSSWALK.*

17. 16 INCHES WIDE CONCRETE BANDING
~~18. CUSTOM BELL SHAPED LUMINAIRE AT BUS SHELTER~~

## KEYNOTES:

1. PEDESTRIAN LIGHT
2. DRIVEWAY APPROACHES PER CITY OF RIVERSIDE PUBLIC WORKS
3. *16" WIDE, 4" THICK STAMPED CONCRETE BANDING.*
4. CURB RAMP PER CITY OF RIVERSIDE PUBLIC WORKS STANDARD DETAIL
5. NATURAL GREY CONCRETE SIDEWALK WITH LIGHT TO MEDIUM BROOM FINISH
6. NATURAL GREY CONCRETE BANDING WITH SMOOTH WOOD FLOAT FINISH
7. 4 FEET SQUARE TREEWELL
8. BUS SHELTER STRUCTURE COLUMNS
~~9. PLANTER POT~~

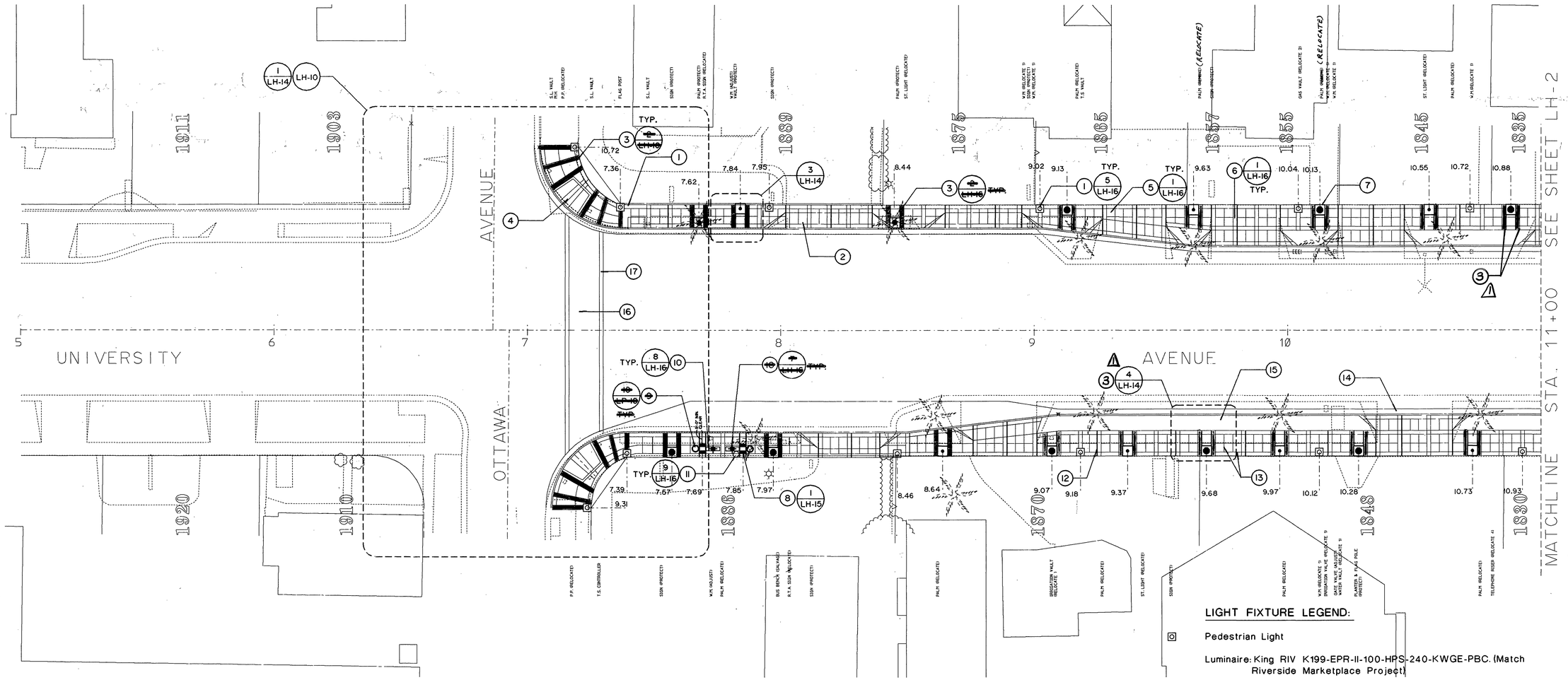


## LIGHT FIXTURE LEGEND:

Pedestrian Light

Luminaire: King RIV K199-EPR-II-100-HPS-240-KWGE-PBC. (Match Riverside Marketplace Project)

Pole: Ameron Pole Products "The Corsican", model no. 20CT15, color 853 w/graffiti-resistant coatings. (Match Riverside Marketplace Project.)

Median Island Tree Uplight

Hydrel 9300L A MH70/*240V*/JBA-01 or equivalent.

~~Custom Bell Shaped Luminaire~~

~~50 W M.H./120V.~~

~~Contact: Stella Bustos at OLC (213) 725-6565, ext. 241~~

INDEXED 5/98 CD

REGISTERED PROFESSIONAL ENGINEER DUANE K. GREENWOOD No. 43965 Exp. 6/30/97 CIVIL STATE OF CALIFORNIA 5/16/96

N HARDSCAPE PLAN

REGISTERED ARCHITECT NI SUH PARK C 4549 STATE OF CALIFORNIA

GRUEN ASSOCIATES
6330 San Vicente Blvd., Los Angeles, CA 90048 (213) 937-4270

REGISTERED LANDSCAPE ARCHITECT FREDERICK STEVEN ABELSON LIC. NO. 3524 9/30/96 Date STATE OF CALIFORNIA

LANDSCAPE ARCHITECT
RICK ABELSON
R.L.A. No. 3524 expires 9/30/96
DATE

| MARK | REVISIONS | APPR. | DATE |
|---|---|---|---|
| 1 | ADD SIDEWALK BANDING | RAA | 10/10/95 |

DESIGNED BY R.A. DRAWN BY F.C. CHECKED BY T.M.

CITY OF RIVERSIDE, CALIFORNIA
PUBLIC WORKS DEPARTMENT

| APPROVED BY | BY | DATE |
|---|---|---|
| DEPUTY P.W. DIRECTOR | | ~~APPROVED BY~~ |
| PRINCIPAL ENGINEER | | |
| CHIEF P.W. INSPECTOR | | |
| TRAFFIC DIVISION | | |
| SURVEYOR | | |
| STREET DIVISION | | |
| PARKS DEPARTMENT | | |

~~PUBLIC WORKS DIRECTOR~~
DATE

# UNIVERSITY AVENUE WIDENING

FROM OTTAWA AVENUE TO IOWA AVENUE

HORIZ. SCALE: 1" = 20'

R-3271

LH-1

SHEET ____ OF ____

CADD file: 24-OUT-1994 /lh01/rsrsv/rsrs02.dgn Users: Name exCEE

20. MEDIAN ISLAND CONCRETE CURB PER CITY OF RIVERSIDE PUBLIC WORKS STANDARD DETAIL
21. 3" TO 6" SALT RIVER ROCK SET IN MORTAR BED
22. WHITE WATER MOUNTAIN ROCK, SIZE VARIES PER PLAN, HEIGHT MATCHES THE SMALLER OF THE WIDTH AND LENGTH DIMENSION OF THE ROCK
23. 4 FEET SQ. TREEWELL IN RIVER ROCK STREAM BED, RIVER ROCK UNGROUTED WITHOUT BASE WITHIN 4'-0" SQ.
24. MEDIAN ISLAND LANDSCAPE AREA
25. ADDITIONAL LANDSCAPE EASEMENT ACQUISITION AREA

10. ~~X~~ 4.5 FEET METAL BENCH
11. METAL TRASH UNIT
12. EXPANSION JOINT
13. TOOLED SCORE JOINT
14. CONCRETE CURB AND GUTTER PER CITY OF RIVERSIDE PUBLIC WORKS
15. LANDSCAPE PARKWAY
16. *STAMPED CONCRETE* CROSSWALK
17. ~~16~~ INCHES WIDE CONCRETE BANDING
~~18. CUSTOM BELL SHAPED LUMINAIRE AT BUS SHELTER~~
19. MEDIAN ISLAND TREE UPLIGHT

KEYNOTES:

1. PEDESTRIAN LIGHT
2. DRIVEWAY APPROACHES PER CITY OF RIVERSIDE PUBLIC WORKS
3. *16"WIDE, 4"THICK STAMPED CONCRETE BANDING.*
4. CURB RAMP PER CITY OF RIVERSIDE PUBLIC WORKS STANDARD DETAIL
5. NATURAL GREY CONCRETE SIDEWALK WITH LIGHT TO MEDIUM BROOM FINISH
6. NATURAL GREY CONCRETE BANDING WITH SMOOTH WOOD FLOAT FINISH
7. 4 FEET SQUARE TREEWELL
8. BUS SHELTER STRUCTURE COLUMNS
~~9. PLANTER POT~~

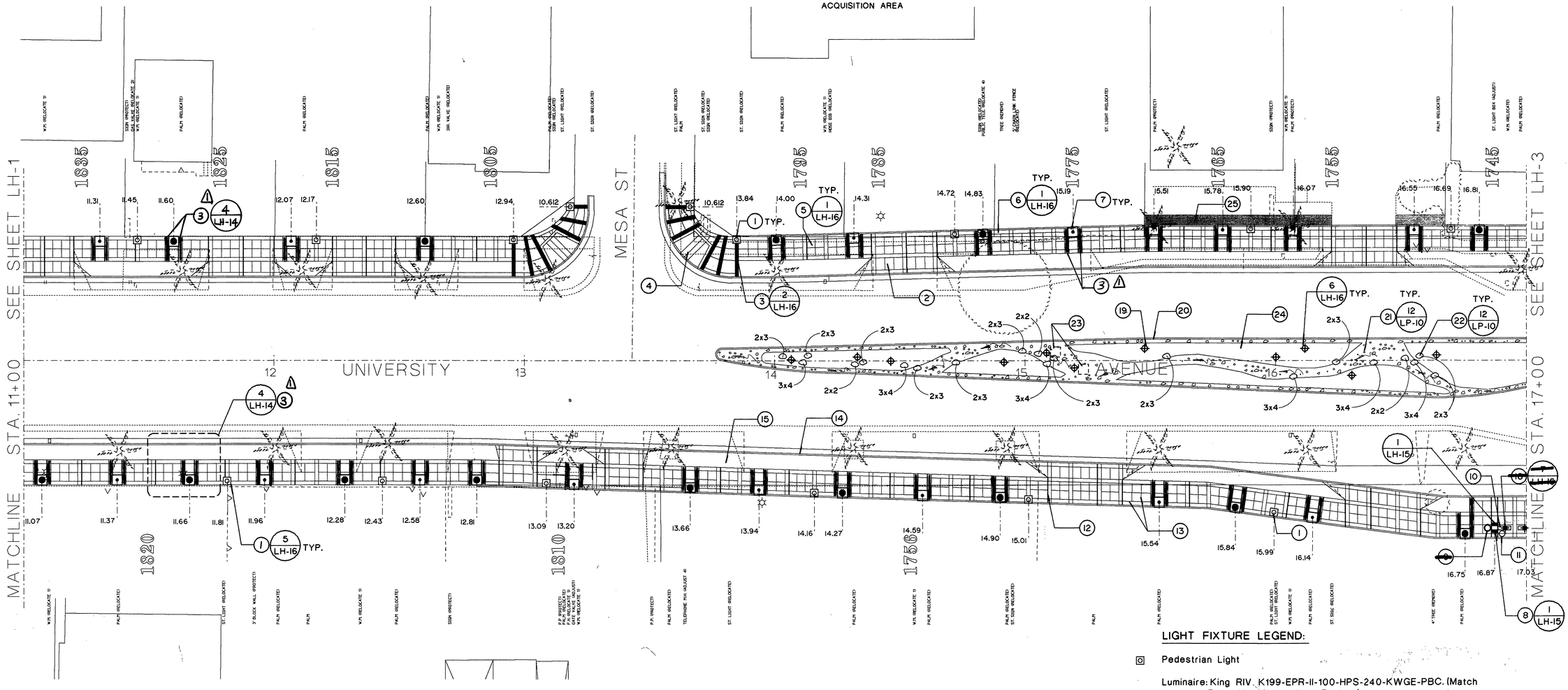


## LIGHT FIXTURE LEGEND:

Pedestrian Light

Luminaire: King RIV. K199-EPR-II-100-HPS-240-KWGE-PBC. (Match Riverside Marketplace Project)

Pole: Ameron Pole Products "The Corsican", model no. 20CT15, color 853 w/graffiti-resistant coatings. (Match Riverside Marketplace Project.)

Median Island Tree Uplight

Hydrel 9300L A MH70/240V/JBA-01 or equivalent.

~~Custom Bell Shaped Luminaire~~

~~50 W MH/480V~~
~~Contact: Stella Bustos at CLS (213) 725-6565, ext. 244~~

REGISTERED PROFESSIONAL ENGINEER DIANE K. GREENWOOD No. 43965 Exp. 4/30/97 CIVIL STATE OF CALIFORNIA
5/16/95
INDEXED 5/98 CD

N HARDSCAPE PLAN

REGISTERED ARCHITECT KI SUH PARK C 4549 STATE OF CALIFORNIA

GRUEN ASSOCIATES
6330 San Vicente Blvd., Los Angeles, CA 90048 (213) 937-4270

REGISTERED LANDSCAPE ARCHITECT FREDERICK STEVEN ABELSON LIC. NO. 3524 9/30/96 Date STATE OF CALIFORNIA

LANDSCAPE ARCHITECT
RICK ABELSON
R.L.A. No. 3524 expires 9/30/96
DATE

| MARK | REVISIONS | APPR. | DATE |
|---|---|---|---|
| 1 | ADD SIDEWALK BANDING @29 | | 10/14/96 |

DESIGNED BY R.A. DRAWN BY F.C. CHECKED BY T.M.

CITY OF RIVERSIDE, CALIFORNIA
PUBLIC WORKS DEPARTMENT

| APPROVED BY | BY | DATE |
|---|---|---|
| DEPUTY P.W. DIRECTOR | | ~~APPROVED BY~~ |
| PRINCIPAL ENGINEER | | |
| CHIEF P.W. INSPECTOR | | |
| TRAFFIC DIVISION | | |
| SURVEYOR | | |
| STREET DIVISION | | |
| PARKS DEPARTMENT | | |

~~PUBLIC WORKS DIRECTOR~~
DATE

UNIVERSITY AVENUE WIDENING
FROM OTTAWA AVENUE TO IOWA AVENUE
HORIZ. SCALE: 1" = 20'

R-3271
LH-2
SHEET ____ OF ____

CADD Info: R1-007-9604 /cad/plotin/Neet16.dgn
Batch Name: Neet16

26. *8" THICK STAMPED CONCRETE CROSSWALK PATTERN.*

20. MEDIAN ISLAND CONCRETE CURB PER CITY OF RIVERSIDE PUBLIC WORKS STANDARD DETAIL
21. 3" TO 6" SALT RIVER ROCK SET IN MORTAR BED
22. WHITE WATER MOUNTAIN ROCK, SIZE VARIES PER PLAN, HEIGHT MATCHES THE SMALLER OF THE WIDTH AND LENGTH DIMENSION OF THE ROCK
23. 3 FEET DIAMETER TREEWELL IN RIVER ROCK STREAM BED
24. MEDIAN ISLAND LANDSCAPE AREA
25. ADDITIONAL LANDSCAPE EASEMENT ACQUISITION AREA

10. ~~8~~ 4.5 FEET METAL BENCH
11. METAL TRASH UNIT
12. EXPANSION JOINT
13. TOOLED SCORE JOINT
14. CONCRETE CURB AND GUTTER PER CITY OF RIVERSIDE PUBLIC WORKS
15. LANDSCAPE PARKWAY
16. *8" THICK STAMPED CONCRETE* CROSSWALK.
17. 16 INCHES WIDE CONCRETE BANDING
18. ~~CUSTOM BELL SHAPED LUMINAIRE AT BUS SHELTER~~
19. MEDIAN ISLAND TREE UPLIGHT

## KEYNOTES:

1. PEDESTRIAN LIGHT
2. DRIVEWAY APPROACHES PER CITY OF RIVERSIDE PUBLIC WORKS
3. *16" WIDE, 4" THICK STAMPED CONCRETE BANDING.*
4. CURB RAMP PER CITY OF RIVERSIDE PUBLIC WORKS STANDARD DETAIL
5. NATURAL GREY CONCRETE SIDEWALK WITH LIGHT TO MEDIUM BROOM FINISH
6. NATURAL GREY CONCRETE BANDING WITH SMOOTH WOOD FLOAT FINISH
7. 4 FEET SQUARE TREEWELL
8. BUS SHELTER STRUCTURE COLUMNS
9. ~~PLANTER POT~~

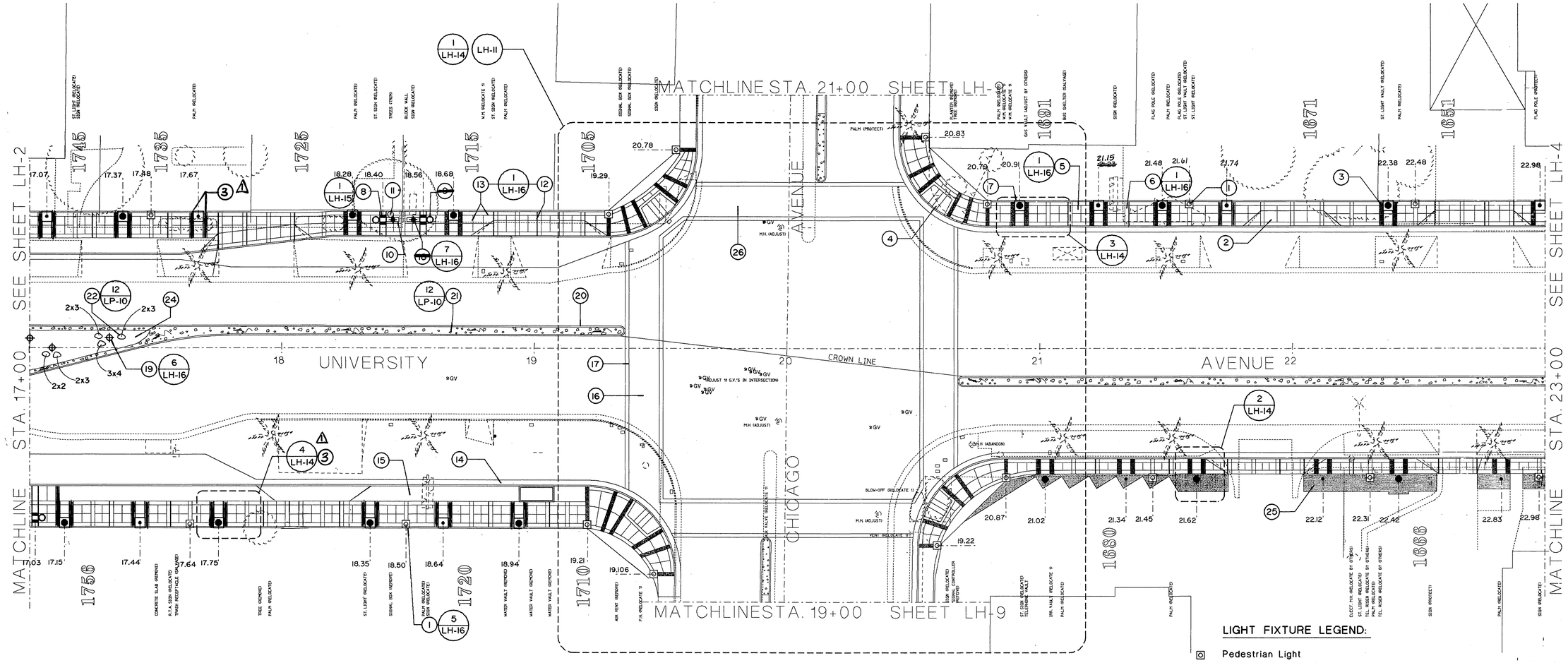


## LIGHT FIXTURE LEGEND:

Pedestrian Light

Luminaire: King RIV K199-EPR-II-100-HPS-240-KWGE-PBC. (Match Riverside Marketplace Project)

Pole: Ameron Pole Products "The Corsican", model no. 20CT15, color 853 w/graffiti-resistant coatings. (Match Riverside Marketplace Project.)

Median Island Tree Uplight

Hydrel 9300L A MH70/~~240~~V/JBA-01 or equivalent.

~~Custom Bell Shaped Luminaire~~

~~50 W. M.H./120V.~~

~~Contact: Stella Bustos at GLS (213) 725-6665, ext. 244~~

INDEXED 5/98 CD

REGISTERED PROFESSIONAL ENGINEER DUANE K. GREENWOOD No. 43965 Exp. 6/30/97 CIVIL STATE OF CALIFORNIA

5/16/95

N HARDSCAPE PLAN

REGISTERED ARCHITECT KI SUH PARK C 4549 STATE OF CALIFORNIA

GRUEN ASSOCIATES

6330 San Vicente Blvd., Los Angeles, CA 90048 (213) 937-4270

REGISTERED LANDSCAPE ARCHITECT FREDERICK STEVEN ABELSON LIC. NO. 3524 9/30/96 Date STATE OF CALIFORNIA

LANDSCAPE ARCHITECT

RICK ABELSON
R.L.A. No. 3524 expires 9/30/96

DATE

| MARK | REVISIONS | APPR. | DATE |
|---|---|---|---|
| 1 | ADD SIDEWALK BANDING ~~R.A.~~ | | 10/1/96 |

DESIGNED BY R.A. DRAWN BY F.C. CHECKED BY T.M.

CITY OF RIVERSIDE, CALIFORNIA
PUBLIC WORKS DEPARTMENT

| APPROVED BY | BY | DATE |
|---|---|---|
| DEPUTY P.W. DIRECTOR | | ~~APPROVED BY~~ |
| PRINCIPAL ENGINEER | | |
| CHIEF P.W. INSPECTOR | | ~~APPROVED UNDER DIRECTION OF~~ |
| TRAFFIC DIVISION | | |
| SURVEYOR | | DATE |
| STREET DIVISION | | |
| PARKS DEPARTMENT | | |

UNIVERSITY AVENUE WIDENING

FROM OTTAWA AVENUE TO IOWA AVENUE

HORIZ. SCALE: 1" = 20'

R-3271

LH-3

SHEET ____ OF ____

20. MEDIAN ISLAND CONCRETE CURB PER CITY OF RIVERSIDE PUBLIC WORKS STANDARD DETAIL
21. 3" TO 6" SALT RIVER ROCK SET IN MORTAR BED
22. WHITE WATER MOUNTAIN ROCK, SIZE VARIES PER PLAN, HEIGHT MATCHES THE SMALLER OF THE WIDTH AND LENGTH DIMENSION OF THE ROCK
23. 3 FEET DIAMETER TREEWELL IN RIVER ROCK STREAM BED
24. MEDIAN ISLAND LANDSCAPE AREA
25. ADDITIONAL LANDSCAPE EASEMENT ACQUISITION AREA

10. 4.5 FEET METAL BENCH
11. METAL TRASH UNIT
12. EXPANSION JOINT
13. TOOLED SCORE JOINT
14. CONCRETE CURB AND GUTTER PER CITY OF RIVERSIDE PUBLIC WORKS
15. LANDSCAPE PARKWAY
16. INTERLOCKING PAVER PATTERN DESIGN CROSSWALK
17. 16 INCHES WIDE CONCRETE BANDING
18. SAWCUT AND REMOVE EXISTING SIDEWALK AS NEEDED FOR BANDING.
19. MEDIAN ISLAND TREE UPLIGHT

KEYNOTES:

1. PEDESTRIAN LIGHT
2. DRIVEWAY APPROACHES PER CITY OF RIVERSIDE PUBLIC WORKS
3. 4" THICK STAMPED CONCRETE BANDING.
4. CURB RAMP PER CITY OF RIVERSIDE PUBLIC WORKS STANDARD DETAIL
5. NATURAL GREY CONCRETE SIDEWALK WITH LIGHT TO MEDIUM BROOM FINISH
6. NATURAL GREY CONCRETE BANDING WITH SMOOTH WOOD FLOAT FINISH
7. 4 FEET SQUARE TREEWELL
8. BUS SHELTER STRUCTURE COLUMNS
9. ~~PLANTER POS~~

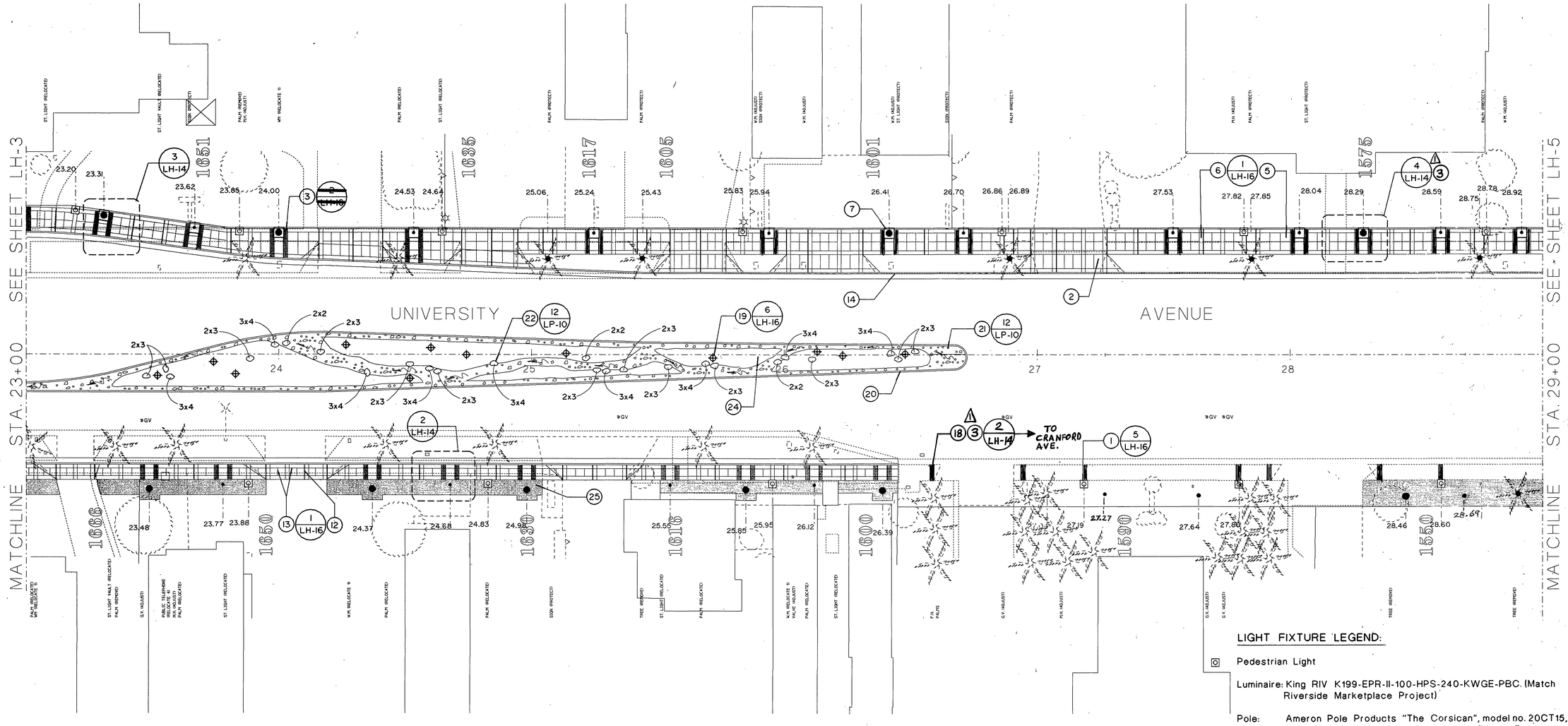


LIGHT FIXTURE LEGEND:

Pedestrian Light

Luminaire: King RIV K199-EPR-II-100-HPS-240-KWGE-PBC. (Match Riverside Marketplace Project)

Pole: Ameron Pole Products "The Corsican", model no. 20CT15, color 853 w/graffiti-resistant coatings. (Match Riverside Marketplace Project.)

Median Island Tree Uplight

Hydrel 9300L A MH70/240V/JBA-01 or equivalent.

~~Custom Bell Shaped Luminaire~~
~~50 W MH/120V~~
~~Contact Stella Bustos at CLS (213) 735-6555, ext. 244~~

Prosencio W. Fuentes
City Parks Planner
April 24, 2001

CD INDEXED 5/98

5/16/98

REGISTERED PROFESSIONAL ENGINEER
DUANE K. GREENWOOD
No. 43965
Exp. 6/30/97
CIVIL
STATE OF CALIFORNIA

N HARDSCAPE PLAN

REGISTERED ARCHITECT
KI SUH PARK
C 4549
STATE OF CALIFORNIA

GRUEN ASSOCIATES
6330 San Vicente Blvd., Los Angeles, CA 90048 (213) 937-4270

REGISTERED LANDSCAPE ARCHITECT
FREDERICK STEVEN ABELSON
LIC. NO. 3524
9/30/96
Date
STATE OF CALIFORNIA

LANDSCAPE ARCHITECT
RICK ABELSON
R.L.A. No. 3524 expires 9/30/96
DATE

| MARK | REVISIONS | APPR. | DATE |
|---|---|---|---|
| 1 | ADD SIDEWALK BANDING | DRD | 10/1/96 |

DESIGNED BY R.A. DRAWN BY F.C. CHECKED BY T.M.

CITY OF RIVERSIDE, CALIFORNIA
PUBLIC WORKS DEPARTMENT

| APPROVED BY | BY | DATE |
|---|---|---|
| DEPUTY P.W. DIRECTOR | [illegible] | 7/15/97 |
| PRINCIPAL ENGINEER | [illegible] | 4/24/97 |
| CHIEF P.W. INSPECTOR | | |
| TRAFFIC DIVISION | | |
| SURVEYOR | [illegible] | 5/16/97 |
| STREET DIVISION | | |
| PARKS DEPARTMENT | [illegible] | 4/24/97 |

~~APPROVED BY~~
~~CITY ENGINEER, DIRECTOR~~
DATE

# UNIVERSITY AVENUE WIDENING

FROM OTTAWA AVENUE TO IOWA AVENUE

HORIZ. SCALE: 1" = 20'

R-3271

LH-4

SHEET ____ OF ____

CADD file: 01-OCT-1996 /cad/plan/lsw04d.dgn
Users Name: lsw04

8" THICK STAMPED CONCRETE
26. CROSSWALK PATTERN PERPENDICULAR TO UNIVERSITY AVE

20. MEDIAN ISLAND CONCRETE CURB PER CITY OF RIVERSIDE PUBLIC WORKS STANDARD DETAIL
21. 3" TO 6" SALT RIVER ROCK SET IN MORTAR BED
22. WHITE WATER MOUNTAIN ROCK, SIZE VARIES PER PLAN, HEIGHT MATCHES THE SMALLER OF THE WIDTH AND LENGTH DIMENSION OF THE ROCK
23. 3 FEET DIAMETER TREEWELL IN RIVER ROCK STREAM BED
24. MEDIAN ISLAND LANDSCAPE AREA
25. ADDITIONAL LANDSCAPE EASEMENT ACQUISITION AREA

10. ~~5~~ 4.5 FEET METAL BENCH
11. METAL TRASH UNIT
12. EXPANSION JOINT
13. TOOLED SCORE JOINT
14. CONCRETE CURB AND GUTTER PER CITY OF RIVERSIDE PUBLIC WORKS
15. LANDSCAPE PARKWAY
16. 8" THICK STAMPED CONCRETE CROSSWALK
17. 16 INCHES WIDE CONCRETE BANDING
18. SAWCUT AND REMOVE EXISTING SIDEWALK AS NEEDED FOR BANDING.
19. MEDIAN ISLAND TREE UPLIGHT

## KEYNOTES:

1. PEDESTRIAN LIGHT
2. DRIVEWAY APPROACHES PER CITY OF RIVERSIDE PUBLIC WORKS
3. 4" THICK STAMPED CONCRETE BANDING.
4. CURB RAMP PER CITY OF RIVERSIDE PUBLIC WORKS STANDARD DETAIL
5. NATURAL GREY CONCRETE SIDEWALK WITH LIGHT TO MEDIUM BROOM FINISH
6. NATURAL GREY CONCRETE BANDING WITH SMOOTH WOOD FLOAT FINISH
7. 4 FEET SQUARE TREEWELL
8. BUS SHELTER STRUCTURE COLUMNS
9. ~~PLANTER POT~~

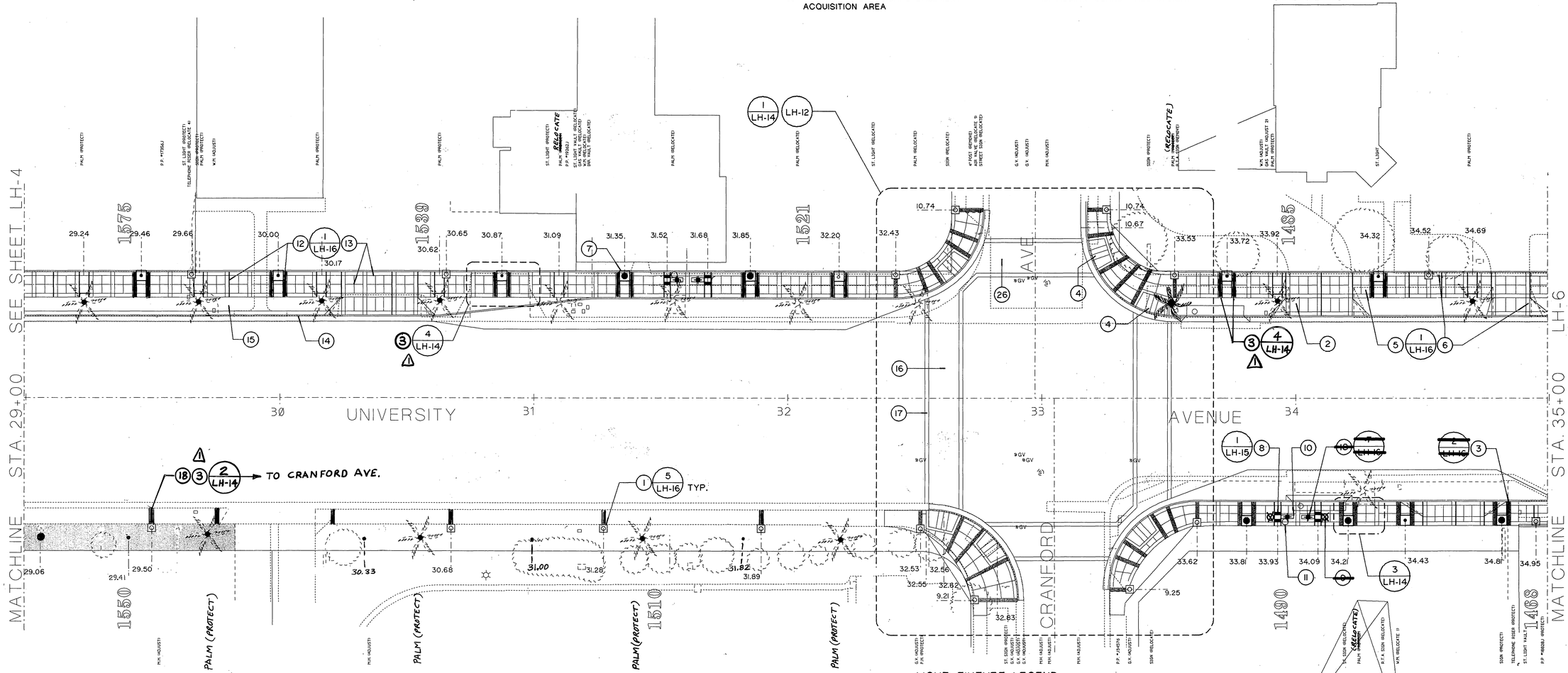


## LIGHT FIXTURE LEGEND:

Pedestrian Light

Luminaire: King RIV K199-EPR-II-100-HPS-240-KWGE-PBC. (Match Riverside Marketplace Project)

Pole: Ameron Pole Products "The Corsican", model no. 20CT15, color 853 w/graffiti-resistant coatings. (Match Riverside Marketplace Project.)

Median Island Tree Uplight

Hydrel 9300L A MH70/240V/JBA-01 or equivalent.

~~Custom Bell Shaped Luminaire~~

~~50 W MH/ 120V.~~

~~Contact Stella Dudoe at CLC (213) 725-6565, ext. 244.~~

REGISTERED PROFESSIONAL ENGINEER DUANE A. GREENWOOD No. 43965 Exp. 6/30/97 CIVIL STATE OF CALIFORNIA
5/16/95

INDEXED 5/96 CD

N HARDSCAPE PLAN

REGISTERED ARCHITECT KI SUH PARK C 4549 STATE OF CALIFORNIA

GRUEN ASSOCIATES
6330 San Vicente Blvd., Los Angeles, CA 90048 (213) 937-4270

REGISTERED LANDSCAPE ARCHITECT FREDERICK STEVEN ABELSON LIC. NO. 3524 9/30/96 Date STATE OF CALIFORNIA

LANDSCAPE ARCHITECT
RICK ABELSON
R.L.A. No. 3524 expires 9/30/96
DATE

| MARK | REVISIONS | APPR. | DATE |
|---|---|---|---|
| 1 | ADD SIDEWALK BANDING | CLC | 10/10/95 |

DESIGNED BY R.A. DRAWN BY F.C. CHECKED BY T.M.

CITY OF RIVERSIDE, CALIFORNIA
PUBLIC WORKS DEPARTMENT

| APPROVED BY | BY | DATE |
|---|---|---|
| ~~APPROVED BY~~ | | |
| DEPUTY P.W. DIRECTOR | [illegible] | 4/21/95 |
| PRINCIPAL ENGINEER | [illegible] | 4/21/95 |
| ~~Traffic Manager/Engineer~~ | | |
| CHIEF P.W. INSPECTOR | | |
| TRAFFIC DIVISION | | |
| SURVEYOR | [illegible] | 5/4/95 |
| STREET DIVISION | | |
| PARKS DEPARTMENT | [illegible] | 5/3/95 |

DATE

UNIVERSITY AVENUE WIDENING
FROM OTTAWA AVENUE TO IOWA AVENUE
HORIZ. SCALE: 1" = 20'

R-3271
LH-5
SHEET ____ OF ____

## KEYNOTES:

1. PEDESTRIAN LIGHT
2. DRIVEWAY APPROACHES PER CITY OF RIVERSIDE PUBLIC WORKS
3. *16' WIDE, 4" THICK STAMPED CONCRETE BANDING.*
4. CURB RAMP PER CITY OF RIVERSIDE PUBLIC WORKS STANDARD DETAIL
5. NATURAL GREY CONCRETE SIDEWALK WITH LIGHT TO MEDIUM BROOM FINISH
6. NATURAL GREY CONCRETE BANDING WITH SMOOTH WOOD FLOAT FINISH
7. 4 FEET SQUARE TREEWELL
8. BUS SHELTER STRUCTURE COLUMNS
9. ~~PLANTER POT~~
10. ~~4.5~~ FEET METAL BENCH
11. METAL TRASH UNIT
12. EXPANSION JOINT
13. TOOLED SCORE JOINT
14. CONCRETE CURB AND GUTTER PER CITY OF RIVERSIDE PUBLIC WORKS
15. LANDSCAPE PARKWAY
16. *8" THICK STAMPED CONCRETE* CROSSWALK
17. 16 INCHES WIDE CONCRETE BANDING
18. ~~CUSTOM BELL SHAPED LUMINAIRE AT BUS SHELTER~~
19. MEDIAN ISLAND TREE UPLIGHT
20. MEDIAN ISLAND CONCRETE CURB PER CITY OF RIVERSIDE PUBLIC WORKS STANDARD DETAIL
21. 3" TO 6" SALT RIVER ROCK SET IN MORTAR BED
22. WHITE WATER MOUNTAIN ROCK, SIZE VARIES PER PLAN, HEIGHT MATCHES THE SMALLER OF THE WIDTH AND LENGTH DIMENSION OF THE ROCK
23. 3 FEET DIAMETER TREEWELL IN RIVER ROCK STREAM BED
24. MEDIAN ISLAND LANDSCAPE AREA
25. ADDITIONAL LANDSCAPE EASEMENT ACQUISITION AREA

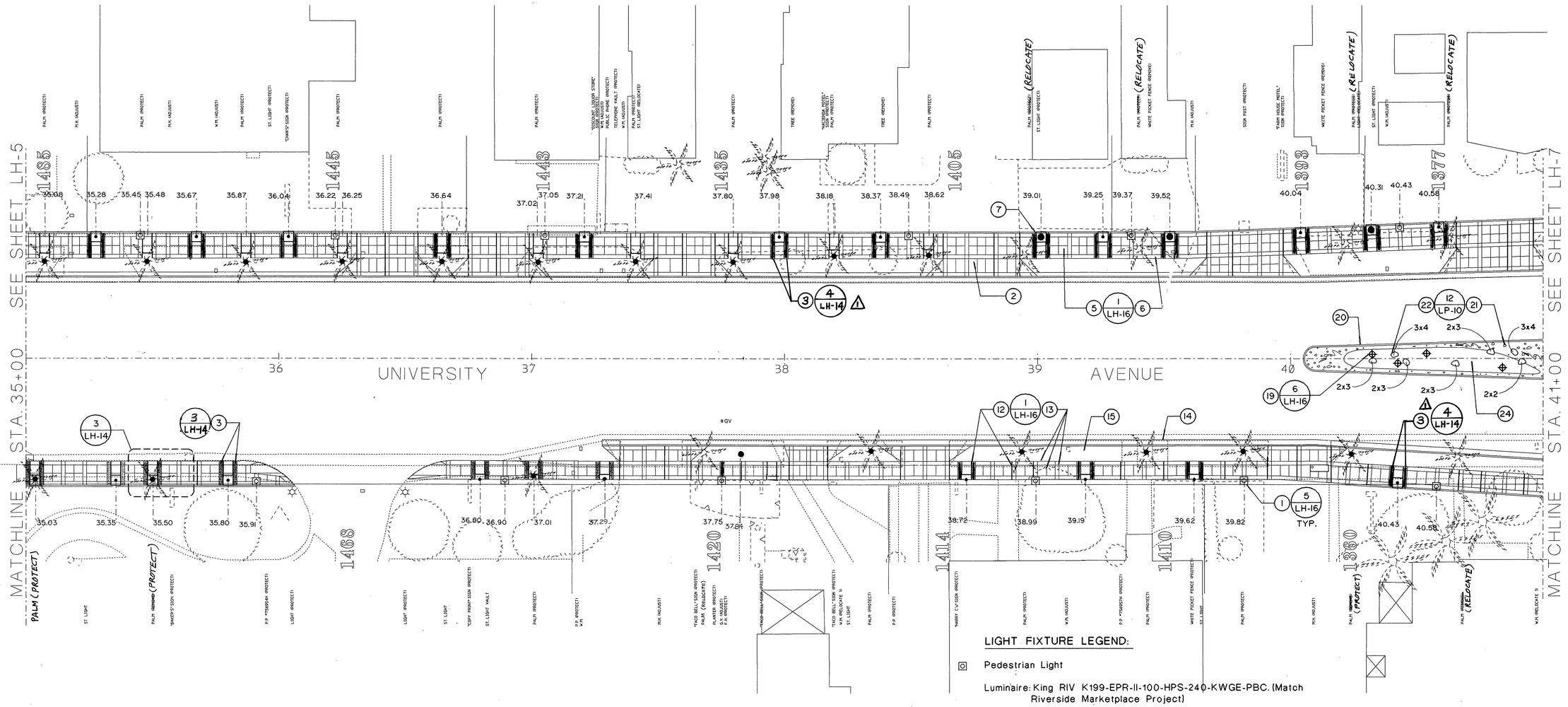


REGISTERED PROFESSIONAL ENGINEER DUANE K. GREENWOOD No. 43965 Exp. 6/30/97 CIVIL STATE OF CALIFORNIA

5/16/95

INDEXED 5/98 CD

N HARDSCAPE PLAN

REGISTERED ARCHITECT KI SUH PAIK C 4549 STATE OF CALIFORNIA

GRUEN ASSOCIATES
6330 San Vicente Blvd., Los Angeles, CA 90048 (213) 937-4270

REGISTERED LANDSCAPE ARCHITECT FREDERICK STEVEN ABELSON LIC. NO. 3524 9/30/96 Date STATE OF CALIFORNIA

LANDSCAPE ARCHITECT
RICK ABELSON
R.L.A. No. 3524 expires 9/30/96
DATE

| MARK | REVISIONS | APPR. | DATE |
|---|---|---|---|
| 1 | ADD SIDEWALK BANDING | RA | 10/95 |

DESIGNED BY R.A. DRAWN BY F.C. CHECKED BY T.M.

CITY OF RIVERSIDE, CALIFORNIA
PUBLIC WORKS DEPARTMENT

| APPROVED BY | BY | DATE |
|---|---|---|
| DEPUTY P.W. DIRECTOR | [illegible] | 5/16/95 |
| PRINCIPAL ENGINEER | [illegible] | 5/15/95 |
| CHIEF P.W. INSPECTOR | | |
| TRAFFIC DIVISION | | |
| SURVEYOR | [illegible] | 5-11-95 |
| STREET DIVISION | | |
| PARKS DEPARTMENT | [illegible] | 5/11/95 |

~~APPROVED BY~~ ~~Public Works Director~~ DATE

# UNIVERSITY AVENUE WIDENING

FROM OTTAWA AVENUE TO IOWA AVENUE

HORIZ. SCALE: 1" = 20'

R-3271

LH-6

SHEET ____ OF ____

CADD Info. 08-NOV-1995 /var2/allen/lhsc07.dgn
Data Name: lhsc07

20. MEDIAN ISLAND CONCRETE CURB PER CITY OF RIVERSIDE PUBLIC WORKS STANDARD DETAIL
21. 3" TO 6" SALT RIVER ROCK SET IN MORTAR BED
22. WHITE WATER MOUNTAIN ROCK, SIZE VARIES PER PLAN, HEIGHT MATCHES THE SMALLER OF THE WIDTH AND LENGTH DIMENSION OF THE ROCK
23. 3 FEET DIAMETER TREEWELL IN RIVER ROCK STREAM BED
24. MEDIAN ISLAND LANDSCAPE AREA
25. ADDITIONAL LANDSCAPE EASEMENT ACQUISITION AREA
26. *8"THICK STAMPED CONCRETE CROSSWALK, PATTERN PERPENDICULAR TO UNIVERSITY AVE.*

10. ~~X~~ *4.5* FEET METAL BENCH
11. METAL TRASH UNIT
12. EXPANSION JOINT
13. TOOLED SCORE JOINT
14. CONCRETE CURB AND GUTTER PER CITY OF RIVERSIDE PUBLIC WORKS
15. LANDSCAPE PARKWAY
16. *8"THICK STAMPED CONCRETE* CROSSWALK
17. *16* INCHES WIDE CONCRETE BANDING
18. ~~CUSTOM BELL SHAPED LUMINAIRE AT BUS SHELTER~~
19. MEDIAN ISLAND TREE UPLIGHT

## KEYNOTES:

1. PEDESTRIAN LIGHT
2. DRIVEWAY APPROACHES PER CITY OF RIVERSIDE PUBLIC WORKS
3. *16"WIDE, 4"THICK STAMPED CONCRETE BANDING.*
4. CURB RAMP PER CITY OF RIVERSIDE PUBLIC WORKS STANDARD DETAIL
5. NATURAL GREY CONCRETE SIDEWALK WITH LIGHT TO MEDIUM BROOM FINISH
6. NATURAL GREY CONCRETE BANDING WITH SMOOTH WOOD FLOAT FINISH
7. 4 FEET SQUARE TREEWELL
8. BUS SHELTER STRUCTURE COLUMNS
9. ~~PLANTER POT~~

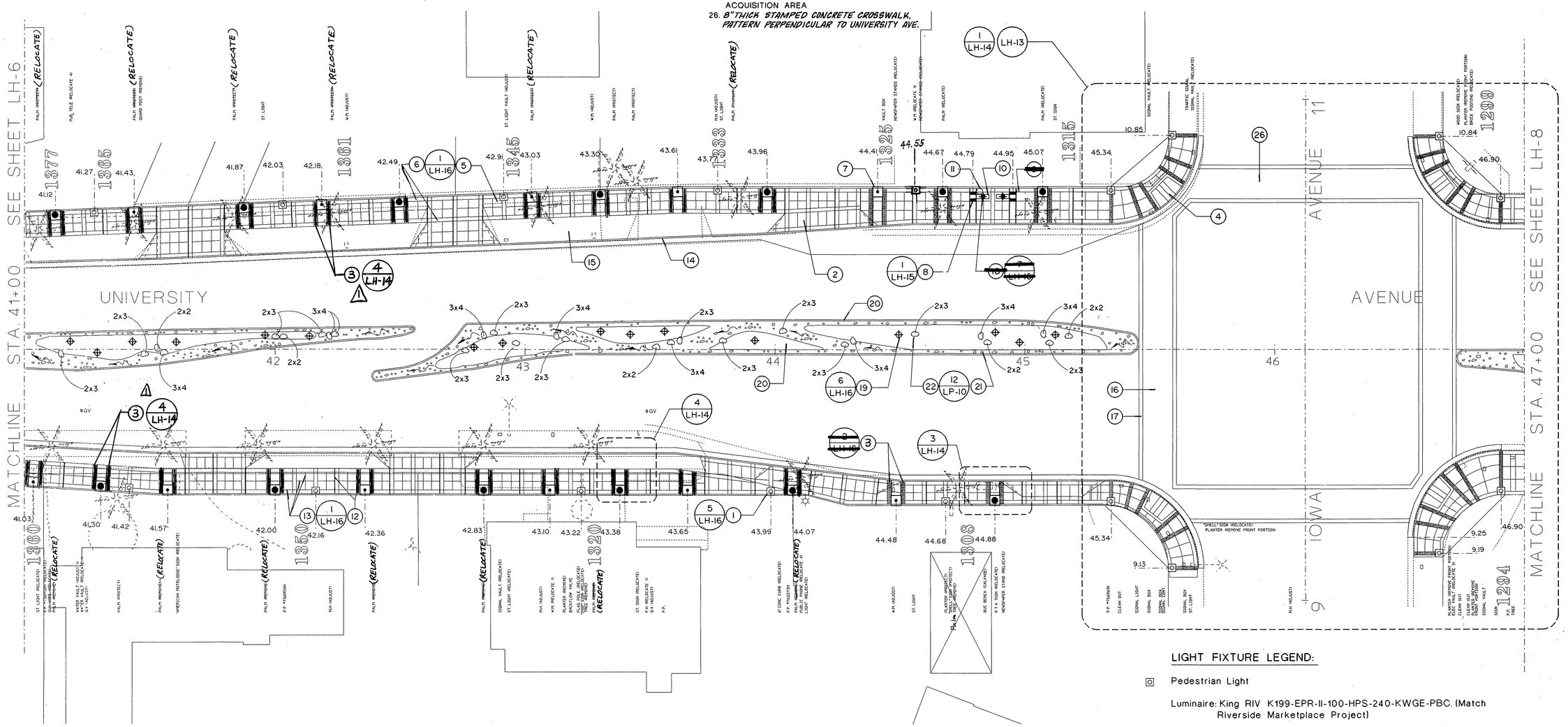


## LIGHT FIXTURE LEGEND:

⊡ Pedestrian Light

Luminaire: King RIV K199-EPR-II-100-HPS-240-KWGE-PBC. (Match Riverside Marketplace Project)

Pole: Ameron Pole Products "The Corsican", model no. 20CT15, color 853 w/graffiti-resistant coatings. (Match Riverside Marketplace Project.)

⊕ Median Island Tree Uplight

Hydrel 9300L A MH70/240V/JBA-01 or equivalent.

~~Custom Bell Shaped Luminaire~~

~~50 W. MH./120V.~~
~~Contact Stella Bustos at CLS (213) 735-6565, ext 241~~

REGISTERED PROFESSIONAL ENGINEER DUANE K. GREENWOOD No. 43965 Exp. 12/30/97 CIVIL STATE OF CALIFORNIA

INDEXED 5/18 cb 5/16/95

N HARDSCAPE PLAN

REGISTERED ARCHITECT KI SUH PARK C 4549 STATE OF CALIFORNIA

GRUEN ASSOCIATES
ARCHITECTURE PLANNING ENGINEERING
6330 San Vicente Blvd., Los Angeles, CA 90048 (213) 937-4270

REGISTERED LANDSCAPE ARCHITECT FREDERICK STEVEN ABELSON LIC. NO. 3524 9/30/96 Date STATE OF CALIFORNIA

LANDSCAPE ARCHITECT
RICK ABELSON
R.L.A. No. 3524 expires 9/30/96
DATE

| MARK | REVISIONS | APPR. | DATE |
|---|---|---|---|
| 1 | ADD SIDEWALK BANDING | BJB | 10/11/95 |

DESIGNED BY R.A. DRAWN BY F.C. CHECKED BY T.M.

CITY OF RIVERSIDE, CALIFORNIA
PUBLIC WORKS DEPARTMENT

| APPROVED BY | BY | DATE |
|---|---|---|
| DEPUTY P.W. DIRECTOR | | ~~APPROVED BY~~ |
| PRINCIPAL ENGINEER | | |
| CHIEF P.W. INSPECTOR | | |
| TRAFFIC DIVISION | | |
| SURVEYOR | | DATE |
| STREET DIVISION | | |
| PARKS DEPARTMENT | | |

UNIVERSITY AVENUE WIDENING
FROM OTTAWA AVENUE TO IOWA AVENUE
HORIZ. SCALE: 1" = 20'

R-3271
LH-7
SHEET ____ OF ____
CADD file: 10-NOV-1994 /var3/umax/trees08.dgn Work Name: trees08

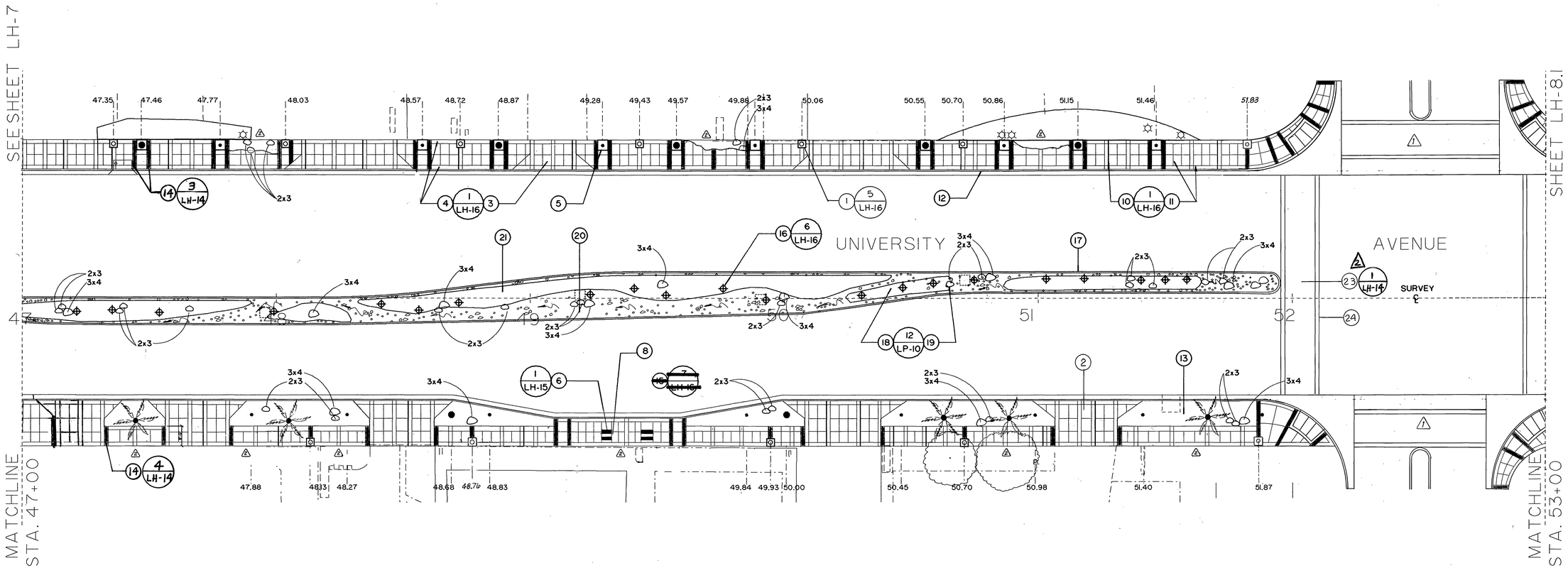


18. 3" TO 6" SALT RIVER ROCK SET IN MORTAR BED
19. WHITE WATER MOUNTAIN ROCK, SIZE VARIES PER PLAN, HEIGHT MATCHES THE SMALLER OF THE WIDTH AND LENGTH DIMENSION OF THE ROCK
20. 4 FEET SQUARE TREEWELL IN RIVER ROCK STREAM BED. RIVER ROCK UNGROUTED AND WITHOUT BASE WITHIN 4'-0" SQUARE
21. MEDIAN ISLAND LANDSCAPE AREA
22. ADDITIONAL LANDSCAPE EASEMENT ACQUISITION AREA TO UNIVERSITY AVE
23. 8" THICK STAMPED CONCRETE CROSSWALK.
24. 16" WIDE CONCRETE BANDING.

10. EXPANSION JOINT
11. TOOLED SCORE JOINT
12. CONCRETE CURB AND GUTTER PER CITY OF RIVERSIDE PUBLIC WORKS
13. LANDSCAPE PARKWAY
14. 4" THICK STAMPED CONCRETE BANDING ~~PERPENDICULAR TO UNIVERSITY AVENUE.~~
~~15. CUSTOM BELL SHAPED LUMINAIRE AT BUS SHELTER~~
16. MEDIAN ISLAND TREE UPLIGHT
17. MEDIAN ISLAND CONCRETE CURB PER CITY OF RIVERSIDE PUBLIC WORKS STANDARD DETAIL

## KEYNOTES:

1. PEDESTRIAN LIGHT
2. DRIVEWAY APPROACHES PER CITY OF RIVERSIDE PUBLIC WORKS
3. NATURAL GREY CONCRETE SIDEWALK WITH LIGHT TO MEDIUM BROOM FINISH
4. NATURAL GREY CONCRETE BANDING WITH SMOOTH WOOD FLOAT FINISH
5. 4 FEET SQUARE TREEWELL
6. BUS SHELTER STRUCTURE COLUMNS - (MODIFY FOUNDATION FOR EXISTING STORM DRAIN)
~~7. PLANTER POT~~
8. 4.5 FEET METAL BENCH
9. METAL TRASH UNIT

## LIGHT FIXTURE LEGEND:

Pedestrian Light

Luminaire: King RIV K199-EPR-II-100-HPS-240-KWGE-PBC. (Match Riverside Marketplace Project)

Pole: Ameron Pole Products "The Corsican", model no. 20CT15, color 853 w/graffiti-resistant coatings. (Match Riverside Marketplace Project.)

Median Island Tree Uplight

Hydrel 9300L A MH70/240V/JBA-01 or equivalent.

~~Custom Bell Shaped Luminaire~~

~~50 W MH/120V~~
~~Contact: Stella Bustos at CLS (213) 725-6565, ext. 244.~~

NOTE:
REFER TO CITY OF RIVERSIDE PUBLIC WORKS DEPARTMENT FOR SPECIFIC UNIVERSITY AVENUE STREET WIDENING. CIVIL AND STRUCTURAL DETAILS AND SPECIFICATIONS FOR ARCHITECTURAL IMPROVEMENTS SHOWN ON THIS SHEET.

REGISTERED PROFESSIONAL ENGINEER DUANE K. GREENWOOD No. 43965 Exp. 6/30/97 CIVIL STATE OF CALIFORNIA
5/16/95

INDEXED 5/98 [signature]

N HARDSCAPE PLAN

REGISTERED ARCHITECT KI SUH PARK C 4549 STATE OF CALIFORNIA

GRUEN ASSOCIATES
6330 San Vicente Blvd., Los Angeles, CA 90048 (213) 937-4270

REGISTERED LANDSCAPE ARCHITECT FREDERICK STEVEN ABELSON LIC. NO. 3524 9/30/96 Date STATE OF CALIFORNIA

LANDSCAPE ARCHITECT
RICK ABELSON
R.L.A. No. 3524 expires 9/30/96
DATE

| MARK | REVISIONS | APPR | DATE |
|---|---|---|---|
| 2 | Changed Stamped Concrete in Sidewalk. | DRB | 10/11/95 |
| | RETURNS | | |
| 1 | REVISED MEDIANS AND ADDED CURB | DRB | 10/2/95 |

DESIGNED BY R.A. DRAWN BY jrp CHECKED BY DRB

CITY OF RIVERSIDE, CALIFORNIA
PUBLIC WORKS DEPARTMENT

| APPROVED BY | BY | DATE |
|---|---|---|
| DEPUTY P.W. DIRECTOR | RHL | 6/2/95 |
| PRINCIPAL ENGINEER | [illegible] | 6/2/95 |
| CHIEF P.W. INSPECTOR | | |
| TRAFFIC DIVISION | | |
| SURVEYOR | [illegible] | 5-18-95 |
| STREET DIVISION | | |
| PARKS DEPARTMENT | [illegible] | 5/31/95 |

~~APPROVED BY~~
~~CHIEF PUBLIC WORKS DIRECTOR~~
DATE

UNIVERSITY AVENUE WIDENING
FROM OTTAWA AVENUE TO IOWA AVENUE
HORIZ. SCALE: 1" = 20'

R-3271
LH-8
SHEET ____ OF ____

## KEYNOTES:

1 - 19. NOT USED
20. MEDIAN ISLAND CONCRETE CURB PER CITY OF RIVERSIDE PUBLIC WORKS STANDARD DETAIL
21. 3" TO 6" SALT RIVER ROCK SET IN MORTAR
22. NOT USED
23. NOT USED
24. MEDIAN ISLAND LANDSCAPE AREA

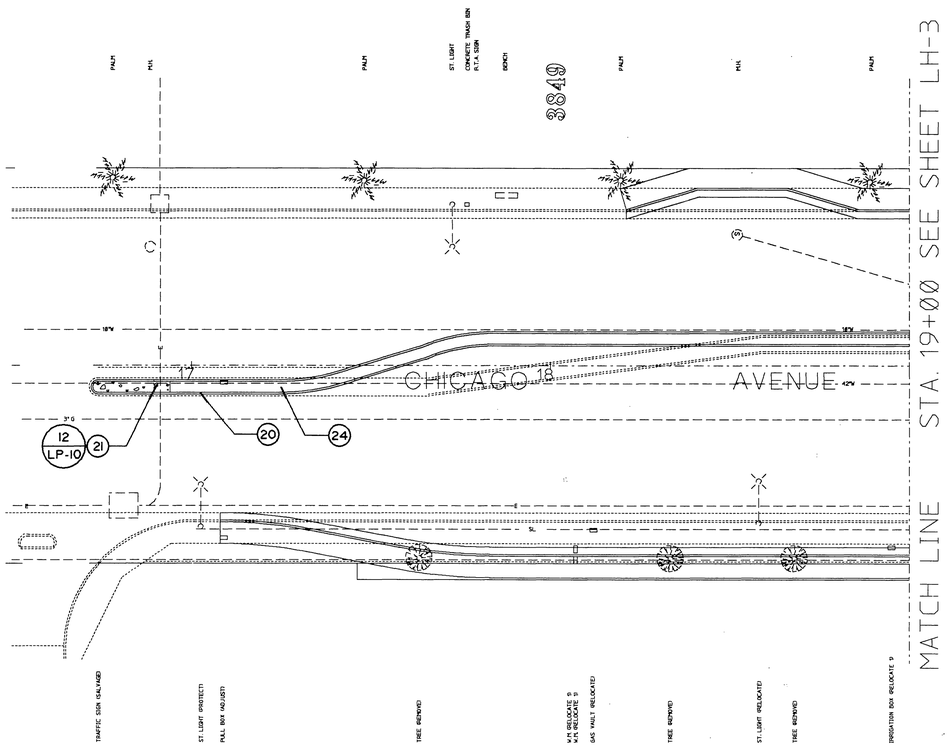


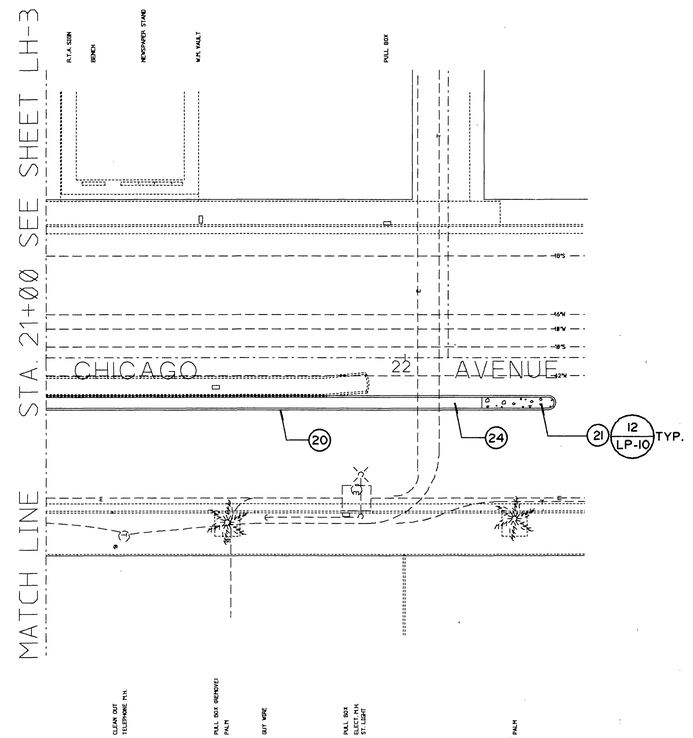


NOTE:
REFER TO CITY OF RIVERSIDE PUBLIC WORKS DEPARTMENT FOR SPECIFIC UNIVERSITY AVENUE STREET WIDENING CIVIL AND STRUCTURAL DETAILS AND SPECIFICATIONS FOR ARCHITECTURAL IMPROVEMENTS SHOWN ON THIS SHEET.

REGISTERED PROFESSIONAL ENGINEER
DUANE K. GREENWOOD
No. 43965
Exp. 6/30/97
CIVIL
STATE OF CALIFORNIA
5/16/95

INDEXED 5/98 CB

**N▶ HARDSCAPE PLAN**

REGISTERED ARCHITECT
NI SUH PARK
C 4549
STATE OF CALIFORNIA

GRUEN ASSOCIATES
6330 San Vicente Blvd., Los Angeles, CA 90048 (213) 937-4270

REGISTERED LANDSCAPE ARCHITECT
FREDERICK STEVEN ABELSON
LIC. NO. 3524
9/30/96
Date
STATE OF CALIFORNIA

LANDSCAPE ARCHITECT
RICK ABELSON
R.L.A. No. 3524 expires 9/30/96
DATE

| MARK | REVISIONS | APPR. | DATE |
|---|---|---|---|

DESIGNED BY R.A. DRAWN BY F.C. CHECKED BY T.M.

CITY OF RIVERSIDE, CALIFORNIA
PUBLIC WORKS DEPARTMENT

| APPROVED, BY | BY | DATE |
|---|---|---|
| ~~APPROVED BY~~ | | |
| DEPUTY P.W. DIRECTOR | [illegible] | 2/11/98 |
| PRINCIPAL ENGINEER | [illegible] | 4/4/97 |
| CHIEF P.W. INSPECTOR | | |
| TRAFFIC DIVISION | | |
| SURVEYOR | [illegible] | 5-4-98 |
| STREET DIVISION | | |
| PARKS DEPARTMENT | [illegible] | 5/1/97 |

DATE

# UNIVERSITY AVENUE WIDENING

FROM OTTAWA AVENUE TO IOWA AVENUE

HORIZ. SCALE: 1" = 20'

R-3271

LH-9

SHEET ____ OF ____

OMB No. 64-0001-1984 /cad/plan/hard2.dgn
Base Name: base10

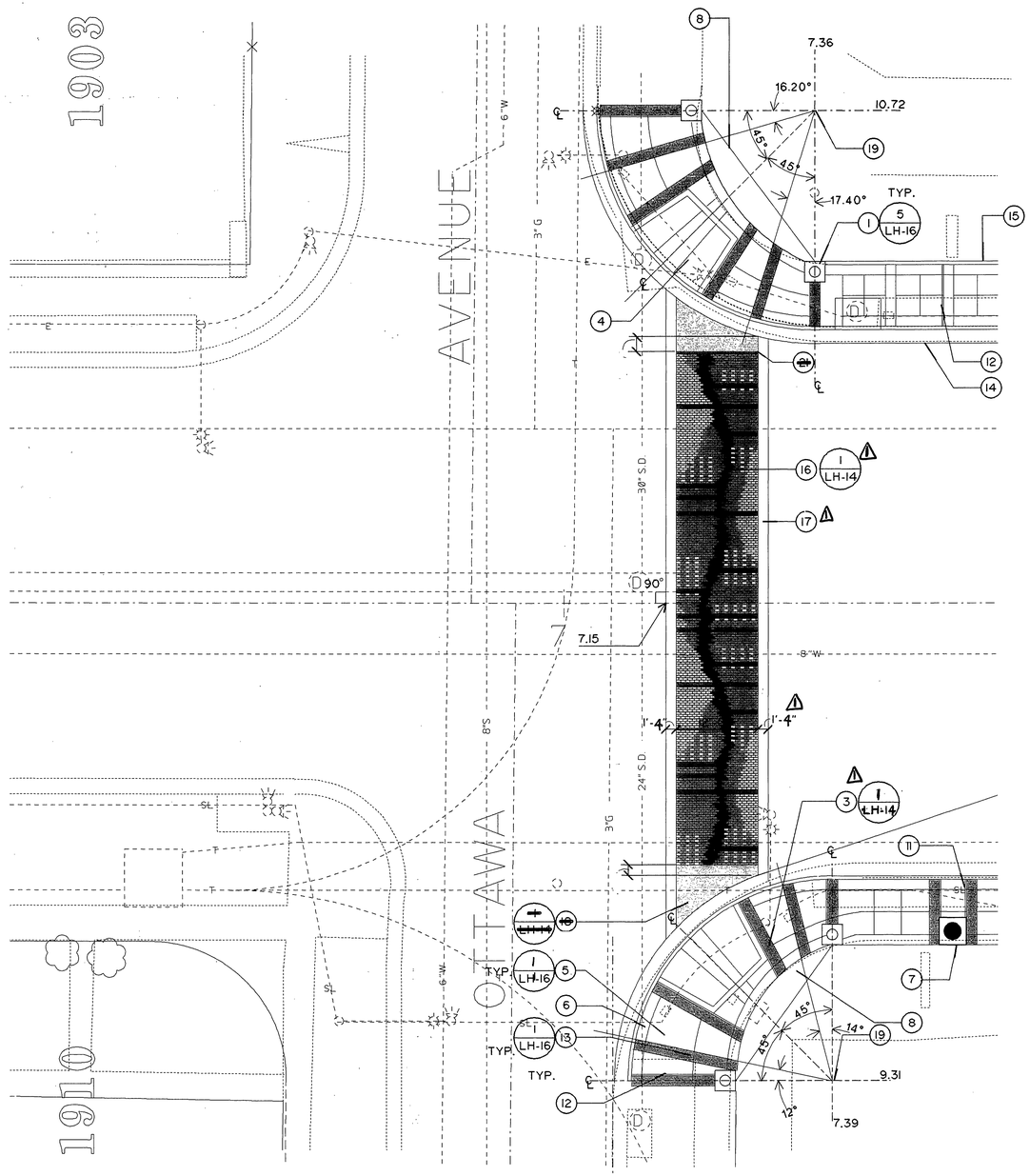


## KEYNOTES:

1. PEDESTRIAN LIGHT
2. NOT USED
3. *16" WIDE, 4" THICK STAMPED CONCRETE BANDING.*
4. CURB RAMP PER CITY OF RIVERSIDE PUBLIC WORKS STANDARD DETAIL
5. NATURAL GREY CONCRETE SIDEWALK WITH LIGHT TO MEDIUM BROOM FINISH
6. NATURAL GREY CONCRETE BANDING WITH SMOOTH WOOD FLOAT FINISH
7. 4 FEET SQUARE TREEWELL
8. CORNER ACCENT SHRUB
9. NOT USED
10. PARKWAY GROUNDCOVER
11. COLD JOINT BETWEEN *BANDING* AND CONCRETE
12. EXPANSION JOINT
13. TOOLED SCORE JOINT
14. CONCRETE CURB AND GUTTER PER CITY OF RIVERSIDE PUBLIC WORKS
15. R.O.W. LINE
16. *8" THICK STAMPED CONCRETE CROSSWALK.*
17. *16"* WIDE NATURAL GREY CONCRETE BANDING WITH *STAMP BRICK* FINISH.
19. POINT OF RADIUS BASED ON CURB RADIUS
20. MEDIAN ISLAND CONCRETE CURB PER CITY OF RIVERSIDE PUBLIC WORKS STANDARD DETAIL

NOTE:
REFER TO CITY OF RIVERSIDE PUBLIC WORKS DEPARTMENT FOR SPECIFIC UNIVERSITY AVENUE STREET WIDENING CIVIL AND STRUCTURAL DETAILS AND SPECIFICATIONS FOR ARCHITECTURAL IMPROVEMENTS SHOWN ON THIS SHEET.

REGISTERED PROFESSIONAL ENGINEER
DUANE K. GREENWOOD
No. 43965
Exp. 6/30/97
CIVIL
STATE OF CALIFORNIA

5/16/95

INDEXED 5/99 CD

N OTTAWA INTERSECTION

REGISTERED ARCHITECT
KI SUH PARK
C 4549
STATE OF CALIFORNIA

GRUEN ASSOCIATES
ARCHITECTURE PLANNING ENGINEERING
6330 San Vicente Blvd., Los Angeles, CA 90048 (213) 937-4270

REGISTERED LANDSCAPE ARCHITECT
FREDERICK STEVEN ABELSON
LIC. NO. 3524
9/30/96
Date
STATE OF CALIFORNIA

LANDSCAPE ARCHITECT
RICK ABELSON
R.L.A. No. 3524 expires 9/30/96
DATE

| MARK | REVISIONS | APPR | DATE |
|---|---|---|---|
| 1 | CHG. CROSSWALK DETAIL | CDD | 10/11/95 |

DESIGNED BY R.A. DRAWN BY F.C. CHECKED BY T.M.

CITY OF RIVERSIDE, CALIFORNIA
PUBLIC WORKS DEPARTMENT

| | BY | DATE |
|---|---|---|
| APPROVED BY | | ~~APPROVED BY~~ |
| DEPUTY P.W. DIRECTOR | [illegible] | 5/16/95 |
| PRINCIPAL ENGINEER | [illegible] | 5/16/95 |
| CHIEF P.W. INSPECTOR | | |
| TRAFFIC DIVISION | | |
| SURVEYOR | [illegible] | 5-15 |
| STREET DIVISION | | |
| PARKS DEPARTMENT | [illegible] | 5/15/95 |

DATE

UNIVERSITY AVENUE
WIDENING
FROM OTTAWA AVENUE TO IOWA AVENUE
HORIZ. SCALE: 1" = 10'

R-3271
LH-10
SHEET ____ OF ____

OASD Mstr. 10-NOV-1994 /usr/Survey/Interest.dgn
Sprm Name: interest

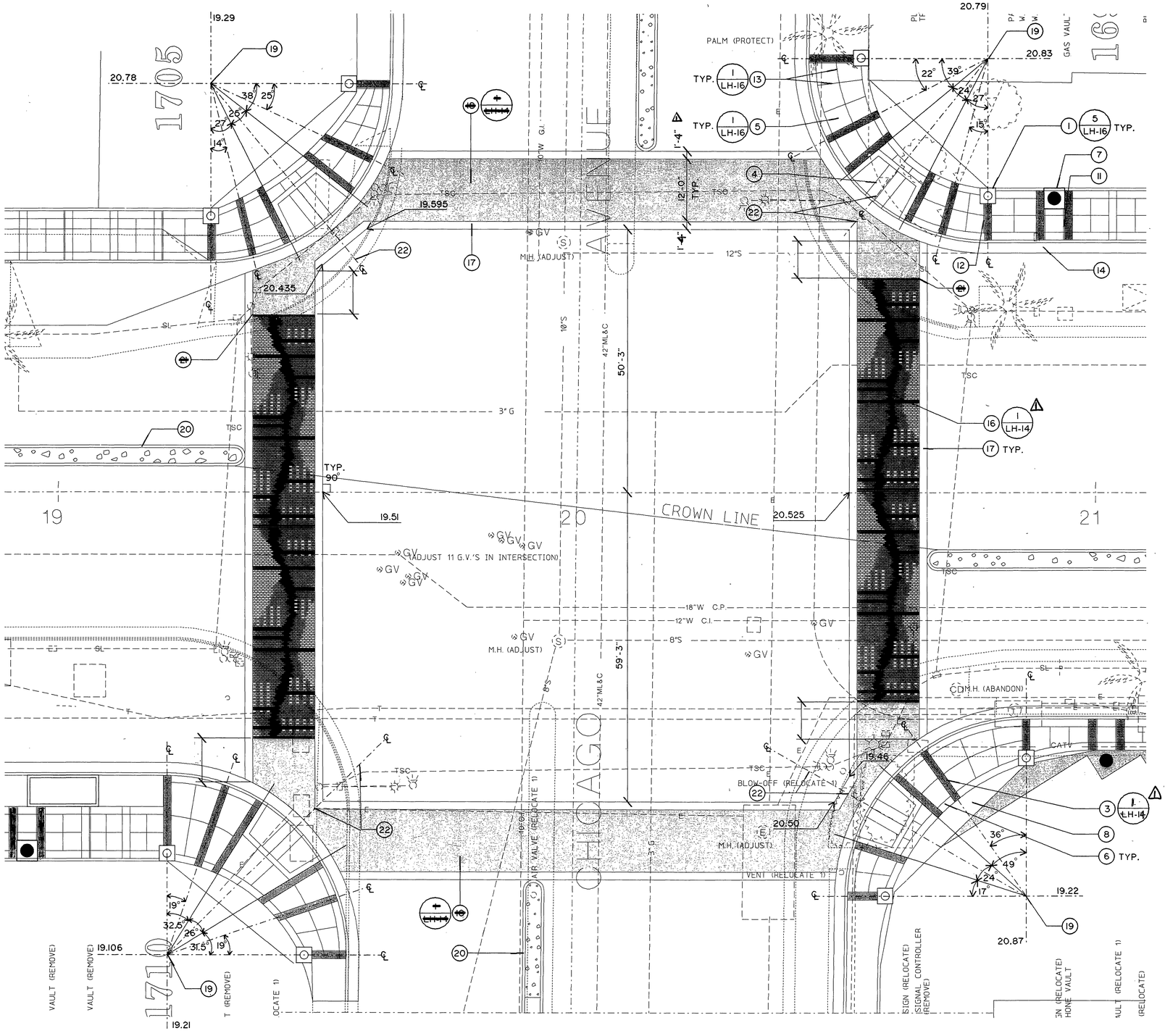


## KEYNOTES:

1. PEDESTRIAN LIGHT
2. NOT USED
3. *16" WIDE, 4" THICK STAMPED CONCRETE BANDING.*
4. CURB RAMP PER CITY OF RIVERSIDE PUBLIC WORKS STANDARD DETAIL
5. NATURAL GREY CONCRETE SIDEWALK WITH LIGHT TO MEDIUM BROOM FINISH
6. NATURAL GREY CONCRETE BANDING WITH SMOOTH WOOD FLOAT FINISH
7. 4 FEET SQUARE TREEWELL
8. CORNER ACCENT SHRUB
9. NOT USED
10. PARKWAY GROUNDCOVER
11. *COLD JOINT BETWEEN BANDING AND CONCRETE.*
12. EXPANSION JOINT
13. TOOLED SCORE JOINT
14. CONCRETE CURB AND GUTTER PER CITY OF RIVERSIDE PUBLIC WORKS
15. R.O.W. LINE
16. *8" THICK STAMPED CONCRETE CROSSWALK.*
17. 16" WIDE NATURAL GREY CONCRETE BANDING WITH *STAMP BRICK* FINISH
18. ~~RED INTERLOCKING PAVER~~
19. POINT OF RADIUS BASED ON CURB RADIUS
20. MEDIAN ISLAND CONCRETE CURB PER CITY OF RIVERSIDE PUBLIC WORKS STANDARD DETAIL
21. ~~POINT OF BEGINNING FOR CROSSWALK PAVER PATTERN DESIGN~~
22. ALIGN

NOTE:
REFER TO CITY OF RIVERSIDE PUBLIC WORKS DEPARTMENT FOR SPECIFIC UNIVERSITY AVENUE STREET WIDENING CIVIL AND STRUCTURAL DETAILS AND SPECIFICATIONS FOR ARCHITECTURAL IMPROVEMENTS SHOWN ON THIS SHEET.

REGISTERED PROFESSIONAL ENGINEER DUANE K. GREENWOOD No. 43965 Exp. 6/30/97 CIVIL STATE OF CALIFORNIA
5/16/95

INDEXED 5/98 CD

N CHICAGO INTERSECTION

REGISTERED ARCHITECT M. SUH PARK C 4549 STATE OF CALIFORNIA

GRUEN ASSOCIATES
ARCHITECTURE · PLANNING · INTERIORS
6330 San Vicente Blvd., Los Angeles, CA 90048 (213) 937-4270

REGISTERED LANDSCAPE ARCHITECT FREDERICK STEVEN ABELSON LIC. NO. 3524 9/30/96 Date STATE OF CALIFORNIA

LANDSCAPE ARCHITECT
RICK ABELSON
R.L.A. No. 3524 expires 9/30/96
DATE

| MARK | REVISIONS | APPR. | DATE |
|---|---|---|---|
| 1 | CHG CROSSWALK DETAIL | DRE | 10/11/96 |

DESIGNED BY R.A. DRAWN BY F.C. CHECKED BY T.M.

CITY OF RIVERSIDE, CALIFORNIA
PUBLIC WORKS DEPARTMENT

| APPROVED BY | BY | DATE |
|---|---|---|
| DEPUTY P.W. DIRECTOR | [illegible] | 4/10/97 |
| PRINCIPAL ENGINEER | [illegible] | 4/4/97 |
| CHIEF P.W. INSPECTOR | | |
| TRAFFIC DIVISION | | |
| SURVEYOR | [illegible] | 5-15 |
| STREET DIVISION | | |
| PARKS DEPARTMENT | [illegible] | 4/21/97 |

~~APPROVED BY~~
~~PUBLIC WORKS DIRECTOR~~
DATE

UNIVERSITY AVENUE WIDENING
FROM OTTAWA AVENUE TO IOWA AVENUE
HORIZ. SCALE: 1" = 10'

R-3271
LH-11
SHEET ___ OF ___

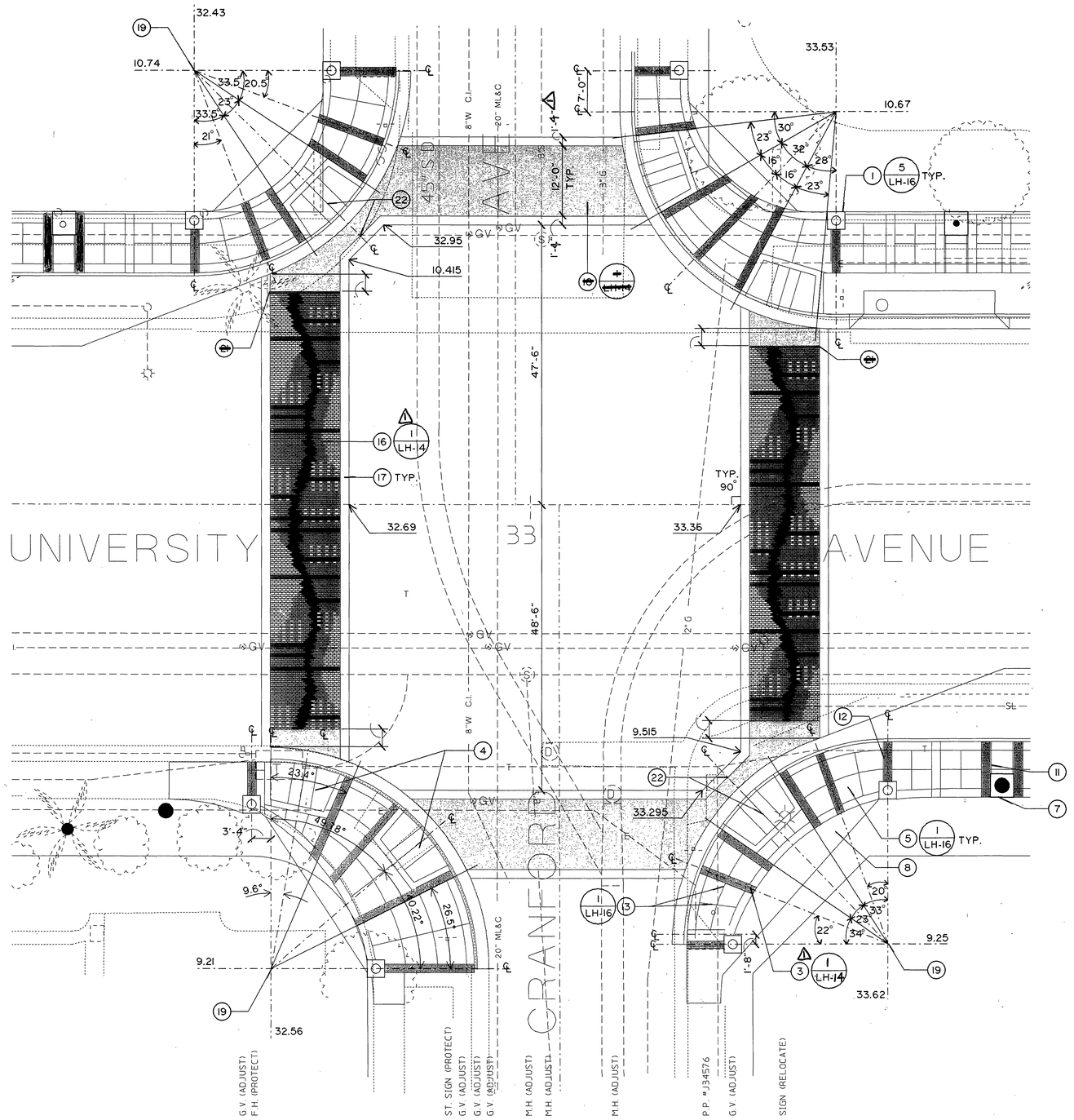


KEYNOTES:

1. PEDESTRIAN LIGHT
2. NOT USED
3. *16"WIDE, 4"THICK STAMPED CONCRETE BANDING.*
4. CURB RAMP PER CITY OF RIVERSIDE PUBLIC WORKS STANDARD DETAIL
5. NATURAL GREY CONCRETE SIDEWALK WITH LIGHT TO MEDIUM BROOM FINISH
6. NATURAL GREY CONCRETE BANDING WITH SMOOTH WOOD FLOAT FINISH
7. 4 FEET SQUARE TREEWELL
8. CORNER ACCENT SHRUB
9. NOT USED
10. PARKWAY GROUNDCOVER
11. COLD JOINT BETWEEN *BANDING* AND CONCRETE
12. EXPANSION JOINT
13. TOOLED SCORE JOINT
14. CONCRETE CURB AND GUTTER PER CITY OF RIVERSIDE PUBLIC WORKS
15. R.O.W. LINE
16. *8"THICK STAMPED CONCRETE* CROSSWALK.
17. 16" WIDE NATURAL GREY CONCRETE BANDING WITH *STAMP BRICK* FINISH

~~18. RED INTERLOCKING PAVER~~

19. POINT OF RADIUS BASED ON CURB RADIUS
20. MEDIAN ISLAND CONCRETE CURB PER CITY OF RIVERSIDE PUBLIC WORKS STANDARD DETAIL

~~21. POINT OF BEGINNING FOR CROSSWALK PAVER PATTERN DESIGN~~

22. ALIGN

REGISTERED PROFESSIONAL ENGINEER
DUANE K. GREENWOOD
No. 43965
Exp. 6/30/97
CIVIL
STATE OF CALIFORNIA
5/16/95

NOTE:
REFER TO CITY OF RIVERSIDE PUBLIC WORKS DEPARTMENT FOR SPECIFIC UNIVERSITY AVENUE STREET WIDENING CIVIL AND STRUCTURAL DETAILS AND SPECIFICATIONS. FOR ARCHITECTURAL IMPROVEMENTS SHOWN ON THIS SHEET.

N CRANFORD INTERSECTION

REGISTERED ARCHITECT
M SUH PARK
C 4549
STATE OF CALIFORNIA

GRUEN ASSOCIATES
ARCHITECTURE PLANNING ENGINEERING
6330 San Vicente Blvd., Los Angeles, CA 90048 (213) 937-4270

REGISTERED LANDSCAPE ARCHITECT
FREDERICK STEVEN ABELSON
LIC. NO. 3524
9/30/96
Date
STATE OF CALIFORNIA

LANDSCAPE ARCHITECT
RICK ABELSON
R.L.A. No. 3524 expires 9/30/96
DATE

| MARK | REVISIONS | APPR. | DATE |
|---|---|---|---|
| 1 | CHG CROSSWALK DETAIL | RA | 10/11/95 |

DESIGNED BY R.A. DRAWN BY F.C. CHECKED BY T.M.

CITY OF RIVERSIDE, CALIFORNIA
PUBLIC WORKS DEPARTMENT

| APPROVED BY | BY | DATE |
|---|---|---|
| DEPUTY P.W. DIRECTOR | | ~~APPROVED BY~~ |
| PRINCIPAL ENGINEER | RAC | 10/11/95 |
| CHIEF P.W. INSPECTOR | | |
| TRAFFIC DIVISION | | |
| SURVEYOR | | |
| STREET DIVISION | | |
| PARKS DEPARTMENT | | |

DATE

INDEXED 5/98 CD

UNIVERSITY AVENUE WIDENING
FROM OTTAWA AVENUE TO IOWA AVENUE
HORIZ SCALE 1" = 10'

R-3271
LH-12
SHEET ____ OF ____

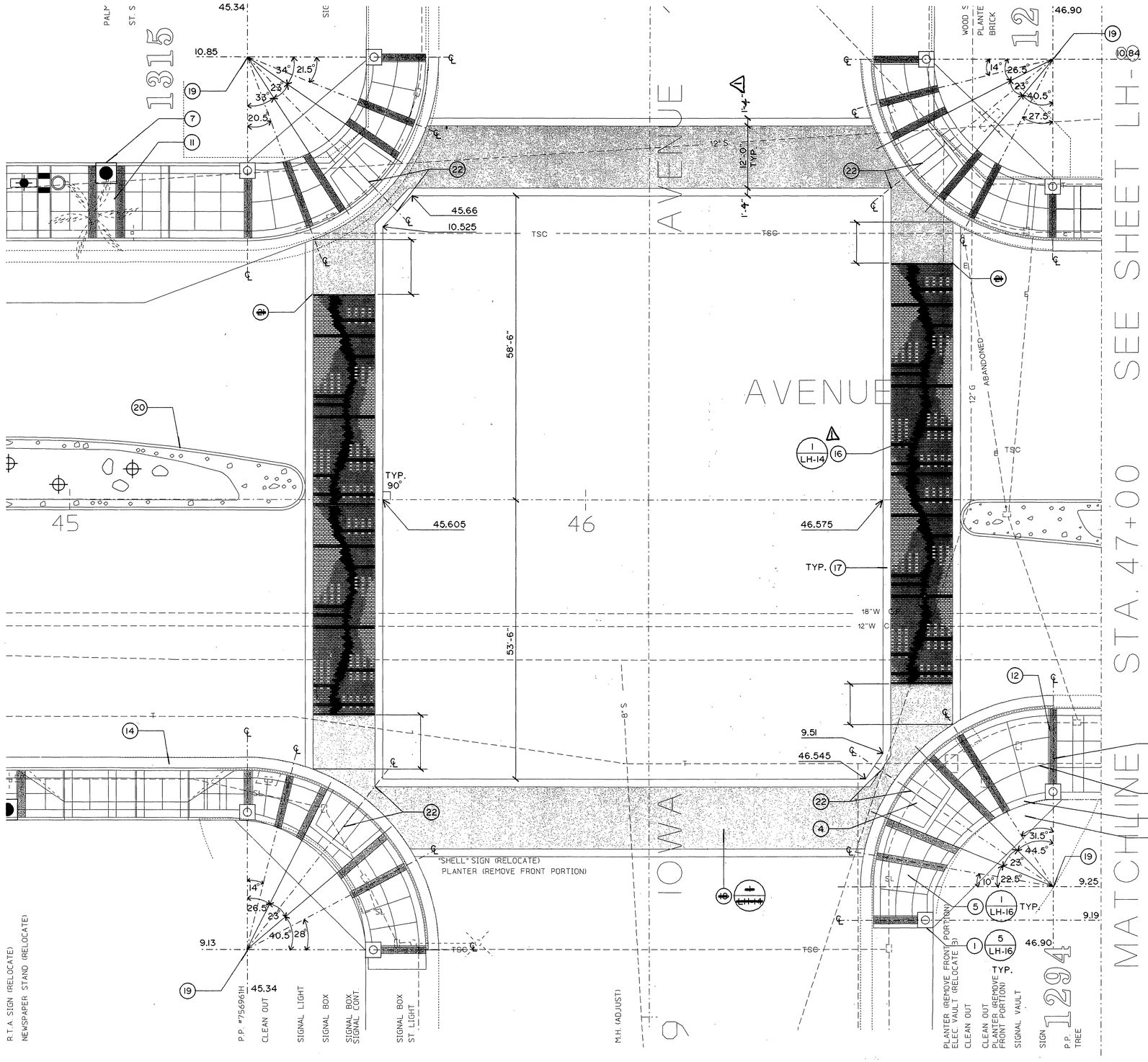


KEYNOTES:

1. PEDESTRIAN LIGHT
2. NOT USED
3. 16" WIDE, 4" THICK STAMPED CONCRETE BANDING.
4. CURB RAMP PER CITY OF RIVERSIDE PUBLIC WORKS STANDARD DETAIL
5. NATURAL GREY CONCRETE SIDEWALK WITH LIGHT TO MEDIUM BROOM FINISH
6. NATURAL GREY CONCRETE BANDING WITH SMOOTH WOOD FLOAT FINISH
7. 4 FEET SQUARE TREEWELL
8. CORNER ACCENT SHRUB
9. NOT USED
10. PARKWAY GROUNDCOVER
11. COLD JOINT BETWEEN BANDING AND CONCRETE
12. EXPANSION JOINT
13. TOOLED SCORE JOINT
14. CONCRETE CURB AND GUTTER PER CITY OF RIVERSIDE PUBLIC WORKS
15. R.O.W. LINE
16. 8" THICK STAMPED CONCRETE CROSSWALK
17. 16" WIDE NATURAL GREY CONCRETE BANDING WITH STAMP BRICK FINISH
18. ~~RED INTERLOCKING PAVER~~
19. POINT OF RADIUS BASED ON CURB RADIUS
20. MEDIAN ISLAND CONCRETE CURB PER CITY OF RIVERSIDE PUBLIC WORKS STANDARD DETAIL
21. ~~POINT OF BEGINNING FOR CROSSWALK PAVER PATTERN DESIGN~~
22. ALIGN

REGISTERED PROFESSIONAL ENGINEER
DUANE K. GREENWOOD
No. 43965
Exp. 6/30/97
CIVIL
STATE OF CALIFORNIA

5/16/95

NOTE:
REFER TO CITY OF RIVERSIDE PUBLIC WORKS DEPARTMENT FOR SPECIFIC UNIVERSITY AVENUE STREET WIDENING CIVIL AND STRUCTURAL DETAILS AND SPECIFICATIONS FOR ARCHITECTURAL IMPROVEMENTS SHOWN ON THIS SHEET.

INDEXED 5/98 CD

N IOWA INTERSECTION

REGISTERED ARCHITECT
KI SUH PARK
C 4549
STATE OF CALIFORNIA

GRUEN ASSOCIATES
ARCHITECTURE PLANNING ENGINEERING
6330 San Vicente Blvd., Los Angeles, CA 90048 (213) 937-4270

REGISTERED LANDSCAPE ARCHITECT
FREDERICK STEVEN ABELSON
LIC. NO. 3524
9/30/96
Date
STATE OF CALIFORNIA

LANDSCAPE ARCHITECT
RICK ABELSON
R.L.A. No. 3524 expires 9/30/96
DATE

| MARK | REVISIONS | APPR | DATE |
|---|---|---|---|
| 1 | CHG CROSSWALK DETAIL | DBG | 10/11/95 |

DESIGNED BY R.A. DRAWN BY F.C. CHECKED BY T.M.

CITY OF RIVERSIDE, CALIFORNIA
PUBLIC WORKS DEPARTMENT

| APPROVED BY | BY | DATE |
|---|---|---|
| DEPUTY P.W. DIRECTOR | DKG | 4/12/95 |
| PRINCIPAL ENGINEER | JB | 4/6/95 |
| CHIEF P.W. INSPECTOR | | |
| TRAFFIC DIVISION | | |
| SURVEYOR | MBD | 5/18 |
| STREET DIVISION | | |
| PARKS DEPARTMENT | LH | 5/31/95 |

~~APPROVED BY~~
~~[illegible]~~
DATE

UNIVERSITY AVENUE WIDENING
FROM OTTAWA AVENUE TO IOWA AVENUE
HORIZ SCALE 1" = 10'

R-3271
LH-13
SHEET ___ OF ___

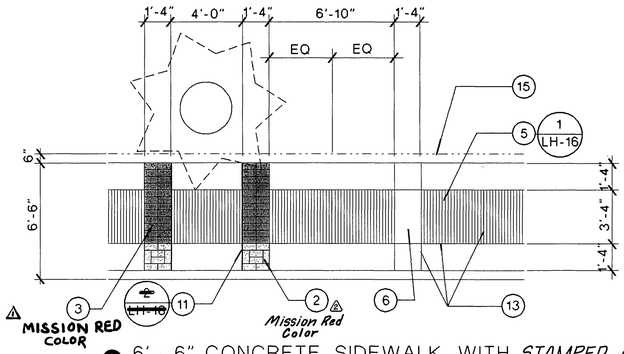


**2** 6' - 6" CONCRETE SIDEWALK WITH *STAMPED CONCRETE BANDING*
SCALE: 1/4" = 1' - 0"

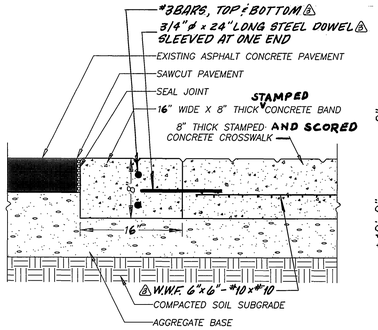


**5** TYPICAL CROSS SECTION AT CROSSWALKS
NOT TO SCALE

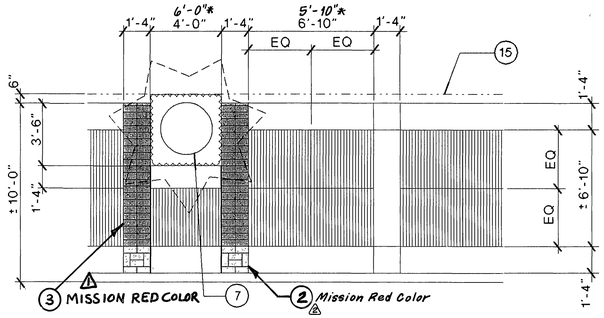


**3** 10' - 0" CONCRETE SIDEWALK WITH *STAMPED CONCRETE BANDING*
SCALE: 1/4" = 1' - 0" ** ONLY FOR PALMS*

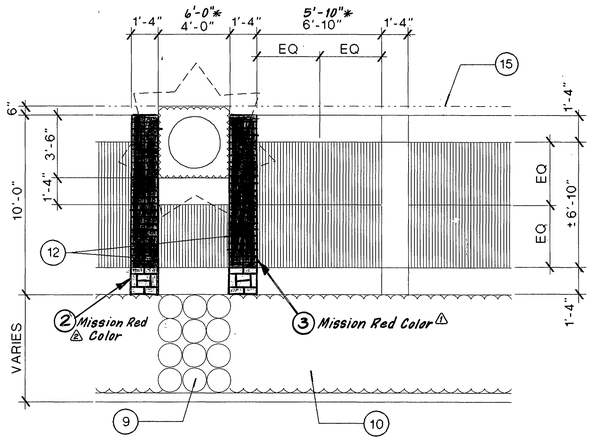


**4** 10' - 0" CONCRETE SIDEWALK WITH PARKWAY
SCALE: 1/4" = 1' - 0" ** ONLY FOR PALMS*

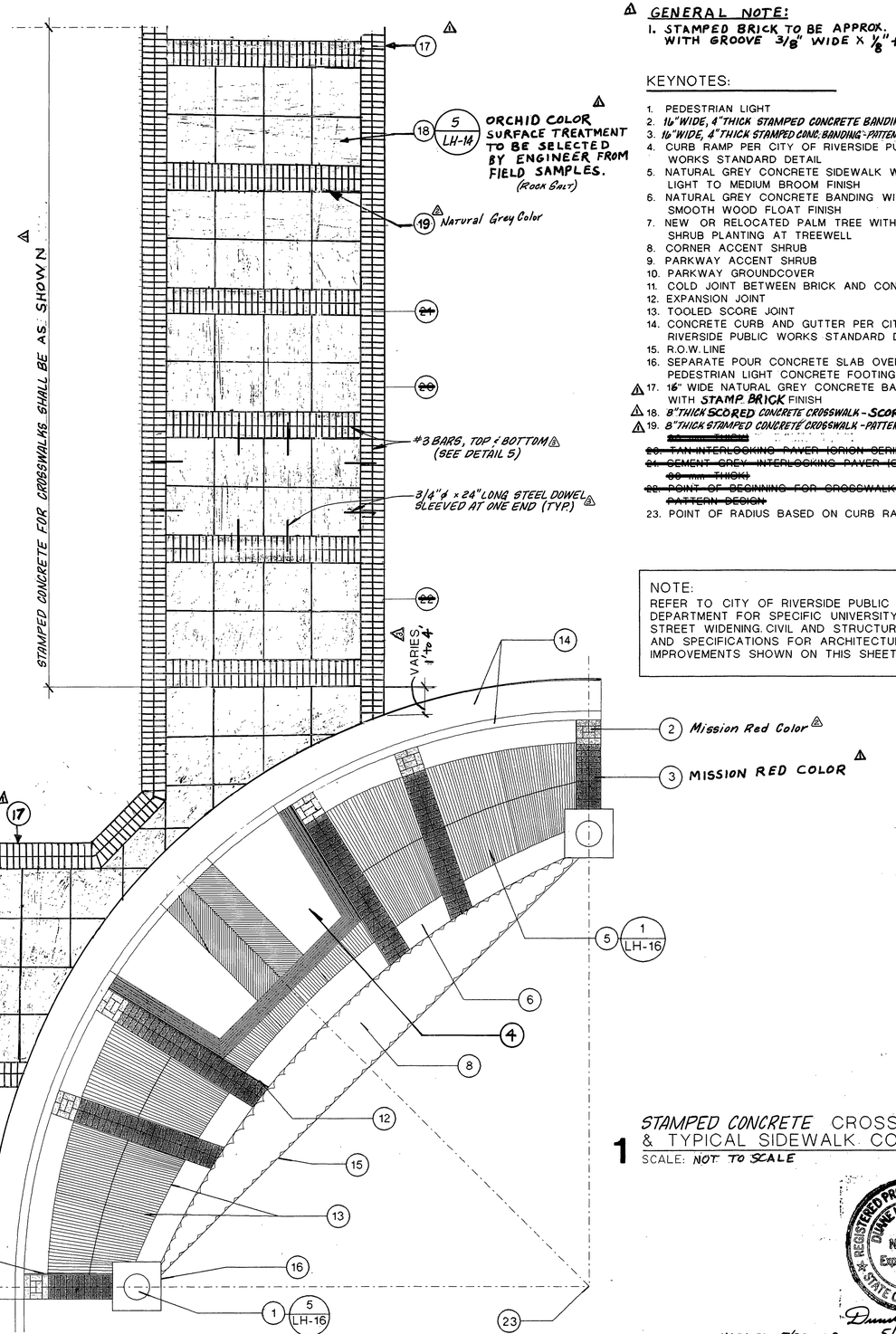


**1** *STAMPED CONCRETE* CROSSWALK & TYPICAL SIDEWALK CORNER
SCALE: *NOT TO SCALE*

**GENERAL NOTE:**

1. STAMPED BRICK TO BE APPROX. 3 3/16" X 7 7/16" WITH GROOVE 3/8" WIDE X 1/8" to 3/16" DEEP.

KEYNOTES:

1. PEDESTRIAN LIGHT
2. 16"WIDE, 4"THICK STAMPED CONCRETE BANDING - PATTERN AS SHOWN.
3. 16"WIDE, 4"THICK STAMPED CONC. BANDING - PATTERN AS SHOWN.
4. CURB RAMP PER CITY OF RIVERSIDE PUBLIC WORKS STANDARD DETAIL
5. NATURAL GREY CONCRETE SIDEWALK WITH LIGHT TO MEDIUM BROOM FINISH
6. NATURAL GREY CONCRETE BANDING WITH SMOOTH WOOD FLOAT FINISH
7. NEW OR RELOCATED PALM TREE WITH LOW SHRUB PLANTING AT TREEWELL
8. CORNER ACCENT SHRUB
9. PARKWAY ACCENT SHRUB
10. PARKWAY GROUNDCOVER
11. COLD JOINT BETWEEN BRICK AND CONCRETE
12. EXPANSION JOINT
13. TOOLED SCORE JOINT
14. CONCRETE CURB AND GUTTER PER CITY OF RIVERSIDE PUBLIC WORKS STANDARD DETAIL
15. R.O.W. LINE
16. SEPARATE POUR CONCRETE SLAB OVER PEDESTRIAN LIGHT CONCRETE FOOTING
17. 16" WIDE NATURAL GREY CONCRETE BANDING WITH STAMP BRICK FINISH
18. 8"THICK SCORED CONCRETE CROSSWALK - SCORE 3'X3' SQUARE
19. 8"THICK STAMPED CONCRETE CROSSWALK - PATTERN AS SHOWN
~~20. [illegible]~~
~~21. TAN INTERLOCKING PAVER (ORION SERIES 80 mm THICK)~~
~~22. CEMENT GREY INTERLOCKING PAVER (ORION SERIES 80 mm THICK)~~
~~23. POINT OF BEGINNING FOR CROSSWALK PAVER PATTERN DESIGN~~
23. POINT OF RADIUS BASED ON CURB RADIUS

NOTE:
REFER TO CITY OF RIVERSIDE PUBLIC WORKS DEPARTMENT FOR SPECIFIC UNIVERSITY AVENUE STREET WIDENING. CIVIL AND STRUCTURAL DETAILS AND SPECIFICATIONS FOR ARCHITECTURAL IMPROVEMENTS SHOWN ON THIS SHEET.

REGISTERED PROFESSIONAL ENGINEER DUANE K. GREENWOOD No. 43965 Exp. 6/30/97 CIVIL STATE OF CALIFORNIA

Duane K. Greenwood 5/16/95

INDEXED 5/98 CO

CROSSWALK AND SIDEWALK ENLARGEMENT

REGISTERED ARCHITECT KI SUH PARK C 4549 STATE OF CALIFORNIA

GRUEN ASSOCIATES
ARCHITECTURE PLANNING ENGINEERING
6330 San Vicente Blvd., Los Angeles, CA 90048 (213) 937-4270

REGISTERED LANDSCAPE ARCHITECT FREDERICK STEVEN ABELSON LIC. NO. 3524 9/30/96 Date STATE OF CALIFORNIA

LANDSCAPE ARCHITECT
RICK ABELSON
R.L.A. No. 3524 expires 9/30/96
DATE

| MARK | REVISIONS | APPR. | DATE |
|---|---|---|---|
| 2 | Added Reinforcement to Crosswalk | CWD | 6/21/96 |
| 1 | Changed Stamped Concrete Color. | CWD | 6/26/96 |
| 3 | CHANGED STAMP CONCRETE | KJP | 10/11/95 |

DESIGNED BY R.A. DRAWN BY F.C. CHECKED BY T.M.

CITY OF RIVERSIDE, CALIFORNIA
PUBLIC WORKS DEPARTMENT

| | APPROVED BY | | |
|---|---|---|---|
| | ~~APPROVED BY~~ | | |
| | DEPUTY P.W. DIRECTOR | | 4/4/95 |
| | PRINCIPAL ENGINEER | | 4/4/95 |
| | STREET DIVISION | | |
| | PARKS DEPARTMENT | | 5/5/95 |

DATE

UNIVERSITY AVENUE WIDENING
FROM OTTAWA AVENUE TO IOWA AVENUE
HORIZ. SCALE: 1/4" = 1' - 0"

R-3271
LH-14
SHEET ____ OF ____

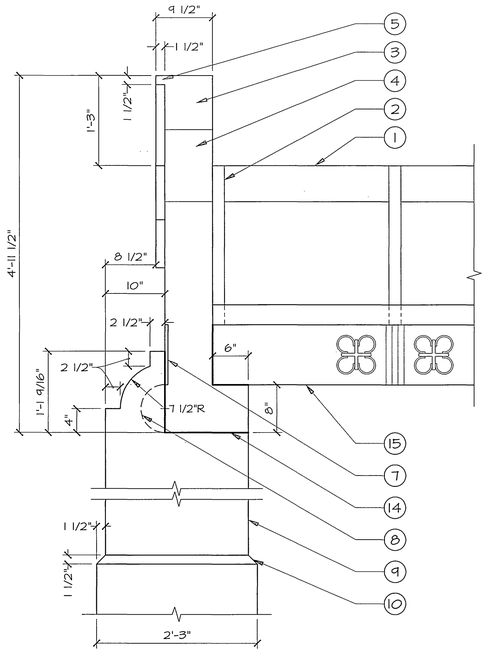


## 6 SECTION DETAIL
SCALE: 1" = 1'-0"

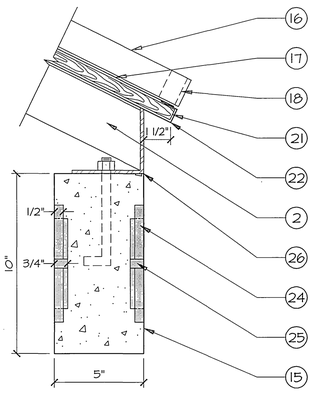


## 4 BEAM / ROOF DETAIL
SCALE: 3" = 1'-0"

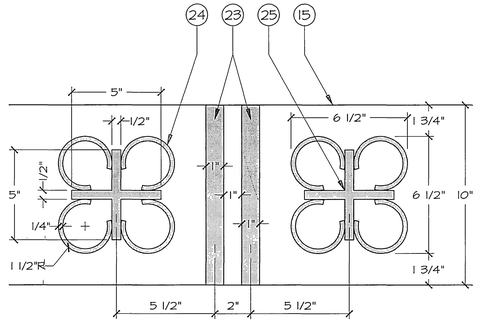


## 4A BEAM EMBOSSING DETAIL
SCALE: 3" = 1'-0"

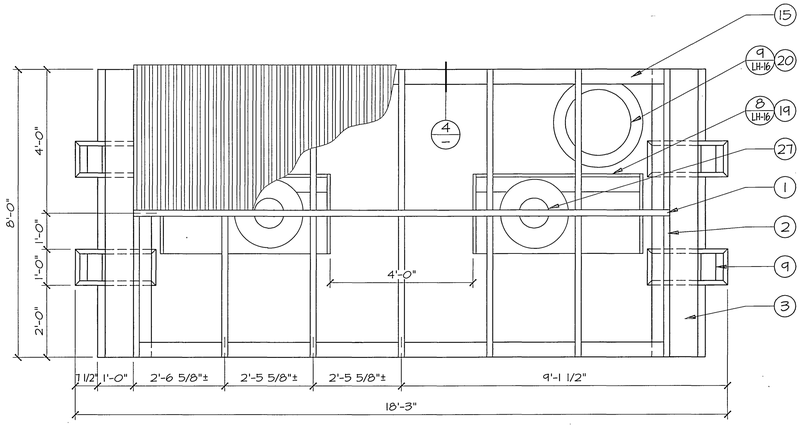


## 1 PLAN VIEW
SCALE: 1/2" = 1'-0"

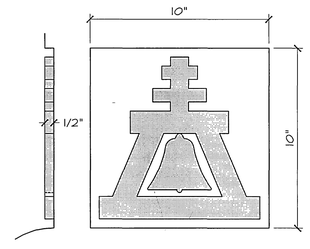


## 5 RAINCROSS LOGO DETAIL
SCALE: 3" = 1'-0"

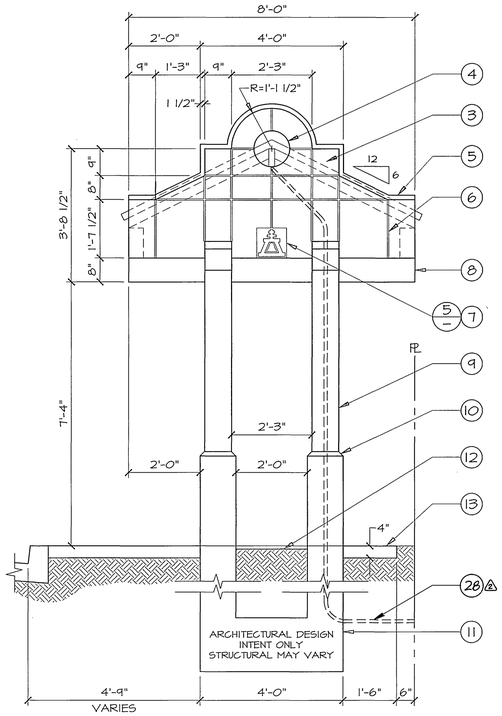


## 2 SIDE ELEVATION
SCALE: 1/2" = 1'-0"

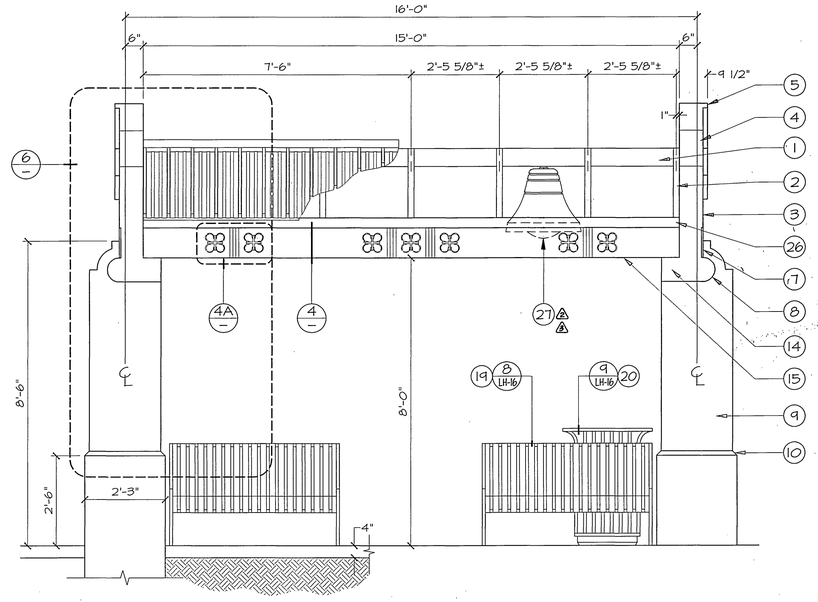


## 3 FRONT ELEVATION
SCALE: 1/2" = 1'-0"

## GENERAL NOTES

1. SIZING OF CONCRETE BEAM AND DIMENSIONS OF CONCRETE FOOTINGS ARE SHOWN FOR ARCHITECTURAL DESIGN INTENT ONLY. CONTRACTOR SHALL DESIGN THE STRUCTURE, FOOTING, ROOF SYSTEM, AND LIGHTING. SHOP DRAWINGS WITH EXACT DIMENSIONS TO BE SUBMITTED TO THE PUBLIC WORKS DEPARTMENT FOR FINAL APPROVAL.

⚠2. ALL METAL ROOF COMPONENTS (EXTERIOR SURFACES) SHALL BE PAINTED WITH AN APPROVED COLOR IN THE RANGE OF *TERRA-COTTA/COLONIAL RED*. ALL METAL ROOF COMPONENTS (INTERIOR SURFACES) INCL. ROOF RAFTERS, SHALL BE PAINTED WITH AN APPROVED COLOR IN THE RANGE OF **BROWN**.

## KEYNOTES

1. 6" x 2" x 3/16" RECTANGULAR STRUCTURAL STEEL TUBING "RIDGE RAFTER".
2. 3" x 2" x 3/16" RECTANGULAR STRUCTURAL STEEL TUBING "ROOF RAFTER".
3. PRECAST CONCRETE FACADE PANEL.
4. 12" DIAMETER OPENING THROUGH FACADE.
5. 1-1/2" REVEAL CAP.
6. 1/2" x 1/2" FORMED RECESS SCORE LINES.
7. "RAINCROSS LOGO" EMBOSSED IN FACADE PANEL.
8. 4" RADIUS BULLNOSE BASE TO FACADE PANEL WITH SLOTS FOR COLUMN INSERT.
9. PRECAST CONCRETE COLUMN WITH TRANSITION DETAIL TO BULLNOSE FACADE PANEL BASE.
10. 1-1/2" REVEAL AT COLUMN BASE.
11. REINFORCED CONCRETE FOUNDATION.
12. VINE POCKET.
13. CONCRETE SIDEWALK (4" MINIMUM).
14. CONTINUOUS CONCRETE BEAM BASE TO FACADE PANEL.
15. 10" x 5" PRECAST CONCRETE BEAM.
16. METAL ROOF, 24 GAUGE WITH 1-5/8" x 1-1/8" RIBS, 8" O.C.
17. ROOFING FELT - 30 lb.
18. NEOPRENE CLOSURE.
19. 4'-6" LONG METAL BENCH.
20. METAL TRASH RECEPTACLE.
21. 5/8" PLYWOOD, STRUCTURAL II, CDX.
22. 16 GAUGE GALVANIZED SHEET METAL COVER WRAPPED AROUND EXPOSED FACIA EDGE OF PLYWOOD AT LEAST 3".
23. 10' HIGH x 1" WIDE x 1/2" DEEP "STRIPE" RECESSED IN CONCRETE BEAM.
24. 3" O.D. x 1/4" WIDE x 1/2" DEEP "CIRCULAR SEGMENTS" RECESSED IN CONCRETE BEAM.
25. 5" WIDE x 1/2" THICK x 3/4" DEEP "CROSS" RECESSED IN CONCRETE BEAM.
26. 4" x 4" x 3/16" STEEL ANGLE.

⚠⚠27. *70W-MH/240V MISSION BELL LUMINAIRE (PHOTO CONTROL REQUIRED FOR BUS SHELTER LUMINAIRE CIRCUIT).*

⚠28. ELECTRICAL CONDUIT TO BE EMBEDDED IN COLUMN AND FACADE PANEL FOR LUMINAIRE. CONNECT TO PULL BOX (SHTS. LL-1 & LL-2, REVISION #2).

REGISTERED PROFESSIONAL ENGINEER
DUANE K. GREENWOOD
No. 43965
Exp. 6/30/97
CIVIL
STATE OF CALIFORNIA

ENGINEER IN RESPONSIBLE CHARGE
DUANE K. GREENWOOD
R.C.E. No. 43965 expires 6/30/97
DATE 6/12/95

| MARK | REVISIONS | APPR | DATE |
|---|---|---|---|
| ⚠ | Changed Wattage/Voltage of Luminaire. | KRD | 7/24/96 |
| ⚠ | Added Elec. Conduit, & Luminaire model No. | KRD | 9/20/96 |
| ⚠ | Revised Colors Per Bus Shelter. | KRD | 9/28/96 |

DESIGNED BY DAN DRAWN BY DAN CHECKED BY [illegible]

CITY OF RIVERSIDE, CALIFORNIA
PUBLIC WORKS DEPARTMENT

| APPROVED BY | BY | DATE |
|---|---|---|
| DEPUTY P.W. DIRECTOR | [illegible] | 4/12/95 |
| PRINCIPAL ENGINEER | [illegible] | 4/14/95 |

DATE

INDEXED 5/98 CG

UNIVERSITY AVENUE WIDENING
FROM OTTAWA AVENUE TO 215 FREEWAY
SCALE: VARIES

R-3271
LH-15
SHEET ____ OF ____

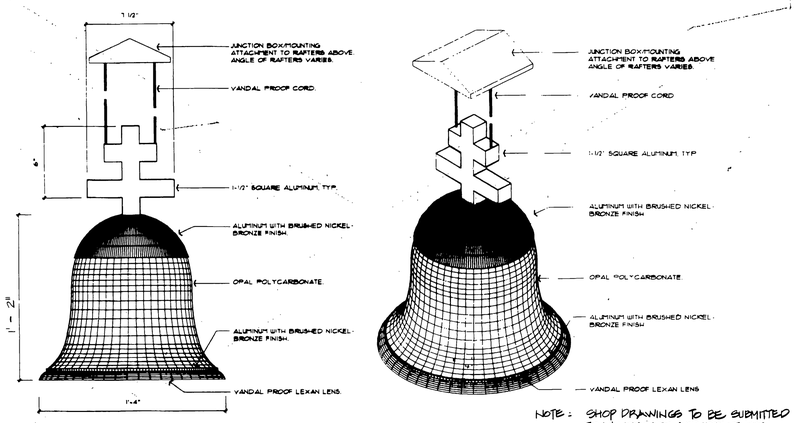


NOTE: SHOP DRAWINGS TO BE SUBMITTED TO LANDSCAPE ARCHITECT FOR APPROVAL PRIOR TO MANUFACTURER

150 W. M.H./120 V.
CONTACT - JON ROSEN AT CLS; (213) 729-6665 EXT. 241

## 7 CUSTOM BELL-SHAPED LUMINAIRE
NO SCALE

Bench

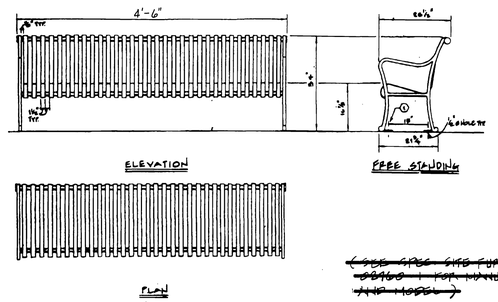


~~(SEE SPEC. SITE FURNISHINGS 02760 - FOR MANUFACTURER AND MODEL)~~

~~SILVERBURY INTERNATIONAL (213) 936-7111 OR (800) 445-7111~~

TERRA-COTTA/COLONIAL RED ⚠
COLOR TO BE ~~ORANGE/TANGERINE~~ RANGE TO BE APPROVED BY ~~ARCHITECT~~ ENGINEER.

## 8 METAL BUS BENCH
NO SCALE

~~Bowery~~ Trash Receptacle

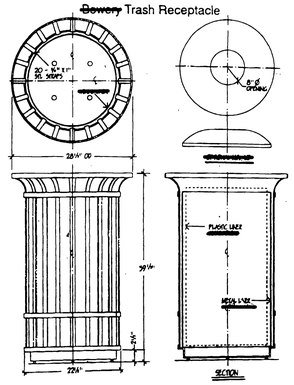


~~MANUFACTURED~~
~~SILVERBURY INTERNATIONAL (800) 445-7111 OR (213) 936-7111~~

TERRA COTTA/COLONIAL RED ⚠
THE COLOR TO BE ~~ORANGE/TANGERINE~~ RANGE TO BE APPROVED BY ~~ARCHITECT~~ ENGINEER.

~~(SEE SPEC. 02760-2)~~

## 9 METAL TRASH RECEPTACLE
NO SCALE

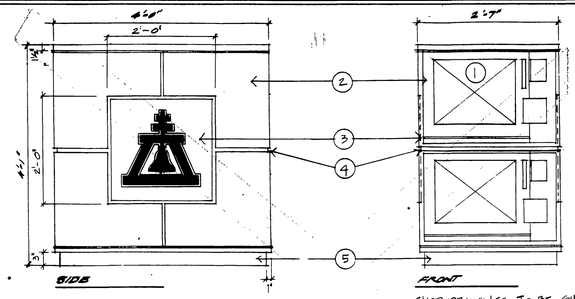


SHOP DRAWINGS TO BE SUBMITTED TO LANDSCAPE ARCHITECT FOR APPROVAL PRIOR TO MANUFACTURER (ALSO SEE SPEC. 02760-2)

LEGEND

1. Coin operated newsrack with window for newspaper display
2. 12 GA galvanized metal jacket to house 4 newsracks
3. 1/4" recessed area for silk screened image of "Riverside Logo" or other graphics
4. 1/2" wide x 1/4" deep recess typ.
5. Base cover for 4 bolt locations inside

## 4 CUSTOM NEWSPAPER RACK
3/4" = 1'-0"

~~SUBMIT NEWSRACK MANUFACTURED BY SANDPIPER INTERNATIONAL (800) 776-4160 COLOR TO BE ORANGE/TANGERINE RANGE TO BE APPROVED BY ARCHITECT~~

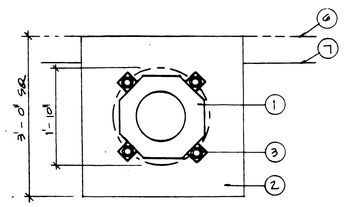


PLAN

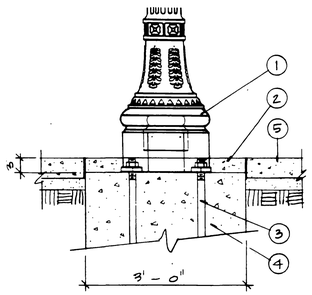


SECTION

## 5 PEDESTRIAN LIGHT BASE
3/4" = 1'-0"

~~(ALSO SEE SPEC. 16612 BY ELECTRICAL ENGINEER)~~

LEGEND

1. Light pole base
2. 3" natural grey concrete topping slab with smooth wood float finish to cover the bolts
3. Anchor bolt - size per structural engineer
4. Concrete footing - depth, reinforcing and PSI per structural engineer
5. Concrete sidewalk
6. Property line
7. Back of sidewalk

LUMINAIRE: KING RIV K-199-EPR-11-100-HPS-240-KWGE-PBC. (MATCH RIVERSIDE MARKETPLACE PROJECT)

POLE: AMERON POLE PRODUCTS "THE CONSIGN" MODEL NO. 20GT15 COLOR 833 W/ GRAFFITI-RESISTANT COATINGS (MATCH RIVERSIDE MARKETPLACE PROJECT)

LEGEND

1. Tree trunk
2. Direct burial tree up-light

~~SEE SPEC 16612~~

-MEDIUM ISLAND TREE UPLIGHT HYDREL 9300L A MH70, 240V/JBA-01 OR EQUIVALENT

## 6 TREE UP-LIGHT
NO SCALE

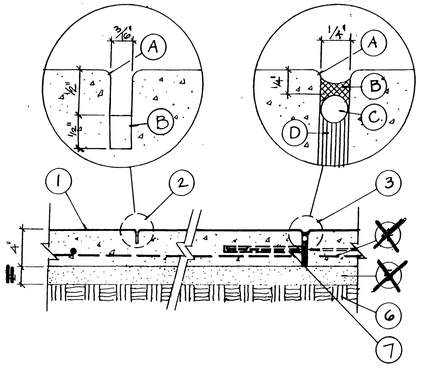


LEGEND

1. Concrete paving, color and finish per site plan.
2. Score joint
   A. 3/16" tooled radius
   B. 1" deep sawcut - cut to be made within 24 hours of pour.
3. Expansion joint
   A. 1/4" tooled radius
   B. Caulking, color to match natural grey concrete paving. Submit color samples prior to installation. Contractor to sweep sand into all caulk joints while caulking is still pliable. Sand to be approved by architect.
   C. Backer rod
   D. 1/4" Felt Expansion Fiber Board
4. ~~#3 Bar 36" O.C. each way~~
5. ~~2" Sand Base~~
6. Compacted subgrade
7. 18" Steel Dowel @ 30" O.C. Sleeve 1 End.

## 1 CONCRETE FLATWORK
NO SCALE

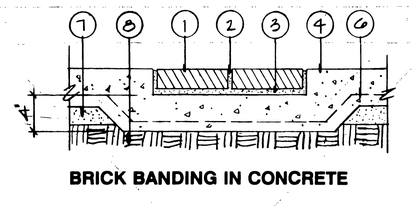


**BRICK BANDING IN CONCRETE**

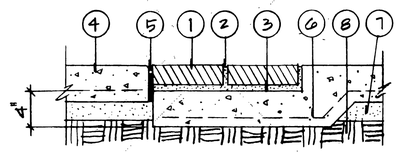


**BRICK BANDING WITH EXPANSION JOINT**

LEGEND

1. Double brick header course
2. 3/8" mortar joint
3. 1" mortar bed
4. Concrete sidewalk
5. Expansion joint (1/-)
6. 6"x6" - 10/10 W.W.M.
7. 2" sand base
8. Compacted subgrade

## 2 BRICK BANDING
1-1/2" = 1'-0"

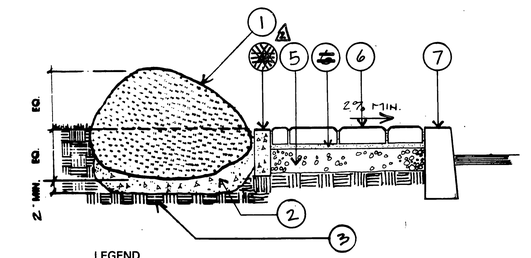


LEGEND

1. White Water Mountain Boulder, Size varies from 2' - 4' per Plan.
2. 2" min. mortar bed
3. Compacted subgrade
4. ~~6" wide X 12" deep Concrete Curb W/F.S. 1/4" below top of~~ *Stamped Concrete*, install control joints @ 8'-0" O.C.
5. ~~4" thick~~ Compacted *Native Soil*.
6. ~~1-1/2" thick setting bed sand~~
   *4" thick* ⚠ [Stamped / Sanded] *Concrete Sidewalk.*
7. Concrete curb per City of Riverside Public Works.

⚠ **3 BOULDER/ *STAMPED CONCRETE SIDEWALK***
NO SCALE

INDEXED 5/98 CO

REGISTERED PROFESSIONAL ENGINEER — DUANE K. GREENWOOD — No. 43965 — Exp. 6/30/97 — CIVIL — STATE OF CALIFORNIA

5/16/95

NOTE: REFER TO CITY OF RIVERSIDE PUBLIC WORKS DEPARTMENT FOR SPECIFIC UNIVERSITY AVENUE STREET WIDENING CIVIL AND STRUCTURAL DETAILS AND SPECIFICATIONS FOR ARCHITECTURAL IMPROVEMENTS SHOWN ON THIS SHEET.

SITE HARDSCAPE/FURNISHING DETAILS

REGISTERED ARCHITECT — N SUH PARK — C 4549 — STATE OF CALIFORNIA

GRUEN ASSOCIATES
6330 San Vicente Blvd., Los Angeles, CA 90048 (213) 937-4270

REGISTERED LANDSCAPE ARCHITECT — FREDERICK STEVEN ABELSON — LIC. NO. 3524 — 9/30/96 — Date — STATE OF CALIFORNIA

LANDSCAPE ARCHITECT
RICK ABELSON
R.L.A. No. 3524 expires 9/30/96
DATE

| MARK | REVISIONS | APPR. | DATE |
|---|---|---|---|
| ⚠ | Detail 3 - Delete Item #4 + Grade | CHG | 10/11/96 |
| ⚠ | Revised Colors for Bus Beach and Trash R. | CHG | 9/28/95 |

DESIGNED BY P.H. DRAWN BY P.H. CHECKED BY RKA

CITY OF RIVERSIDE, CALIFORNIA
PUBLIC WORKS DEPARTMENT

| APPROVED BY | BY | DATE |
|---|---|---|
| ~~APPROVED BY~~ | | |
| DEPUTY P.W. DIRECTOR | [illegible] | 10/11/96 |
| PRINCIPAL ENGINEER | [illegible] | 6/4/96 |
| CHIEF, P.W. INSPECTOR | | |
| TRAFFIC DIVISION | | |
| SURVEYOR | [illegible] | 5-1-96 |
| STREET DIVISION | | |
| PARKS DEPARTMENT | [illegible] | 5/31/95 |

DATE

UNIVERSITY AVENUE WIDENING
FROM OTTAWA AVENUE TO IOWA AVENUE
HORIZ. SCALE: VARIES

R-3271
LH-16
SHEET ____ OF ____

20. MEDIAN ISLAND CONCRETE CURB PER CITY OF RIVERSIDE PUBLIC WORKS STANDARD DETAIL
21. 3" TO 6" SALT RIVER ROCK SET IN MORTAR BED
22. WHITE WATER MOUNTAIN ROCK, SIZE VARIES PER PLAN, HEIGHT MATCHES THE SMALLER OF THE WIDTH AND LENGTH DIMENSION OF THE ROCK
23. 3 FEET DIAMETER TREEWELL IN RIVER ROCK STREAM BED
24. MEDIAN ISLAND LANDSCAPE AREA
25. ADDITIONAL LANDSCAPE EASEMENT ACQUISITION AREA

10. ~~3~~ 4.5 FEET METAL BENCH
11. METAL TRASH UNIT
12. EXPANSION JOINT
13. TOOLED SCORE JOINT
14. CONCRETE CURB AND GUTTER PER CITY OF RIVERSIDE PUBLIC WORKS
15. LANDSCAPE PARKWAY
16. INTERLOCKING PAVER PATTERN DESIGN CROSSWALK
17. 16 INCHES WIDE CONCRETE BANDING
18. SAWCUT AND REMOVE EXISTING SIDEWALK AS NEEDED FOR BANDING.
19. MEDIAN ISLAND TREE UPLIGHT

KEYNOTES:

1. PEDESTRIAN LIGHT
2. DRIVEWAY APPROACHES PER CITY OF RIVERSIDE PUBLIC WORKS
3. 4" THICK STAMPED CONCRETE BANDING.
4. CURB RAMP PER CITY OF RIVERSIDE PUBLIC WORKS STANDARD DETAIL
5. NATURAL GREY CONCRETE SIDEWALK WITH LIGHT TO MEDIUM BROOM FINISH
6. NATURAL GREY CONCRETE BANDING WITH SMOOTH WOOD FLOAT FINISH
7. 4 FEET SQUARE TREEWELL
8. BUS SHELTER STRUCTURE COLUMNS
~~9. PLANTER POT~~

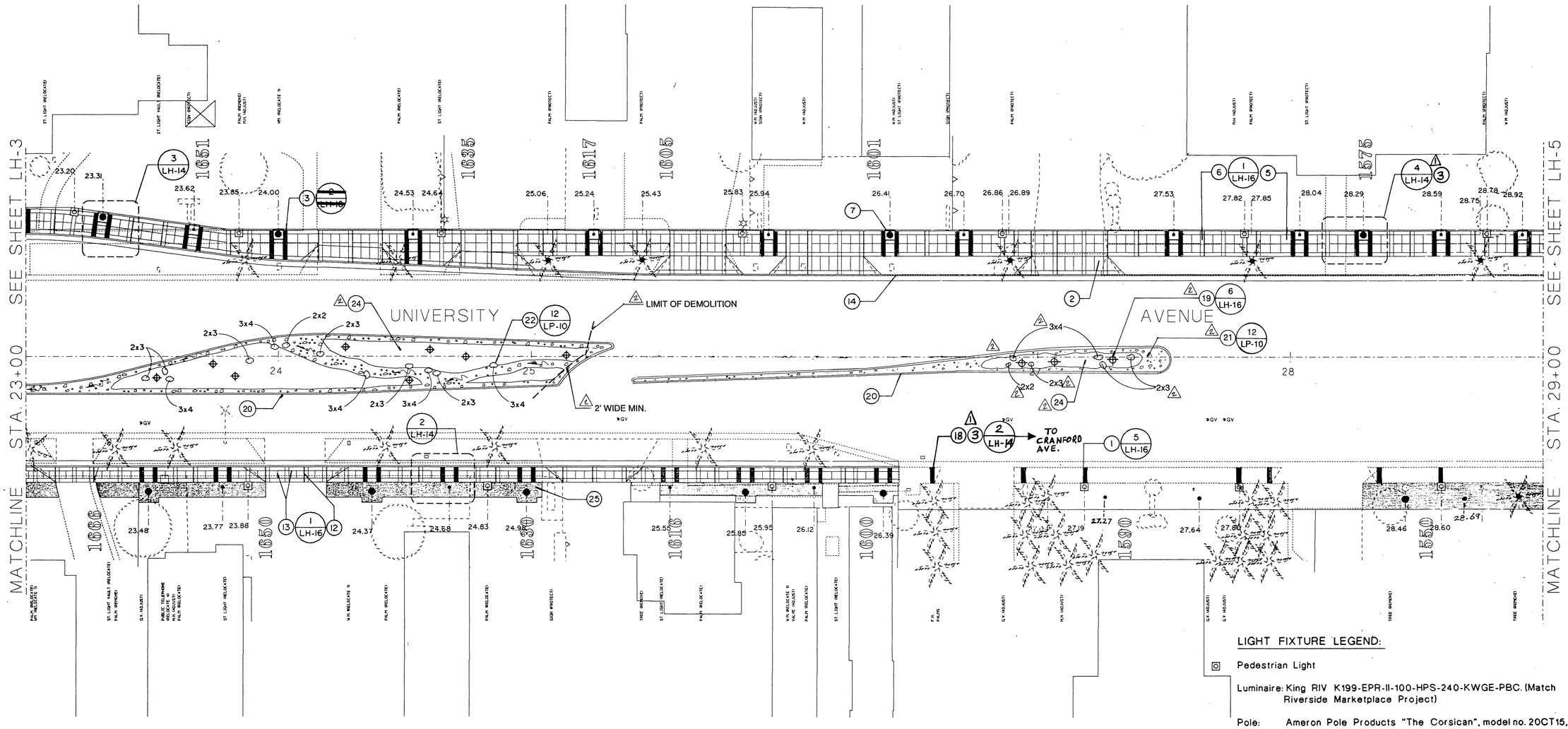


LIGHT FIXTURE LEGEND:

Pedestrian Light

Luminaire: King RIV K199-EPR-II-100-HPS-240-KWGE-PBC. (Match Riverside Marketplace Project)

Pole: Ameron Pole Products "The Corsican", model no. 20CT15, color 853 w/graffiti-resistant coatings. (Match Riverside Marketplace Project.)

Median Island Tree Uplight

Hydrel 9300L A MH70/240V/JBA-01 or equivalent.

~~Custom Bell Shaped Luminaire~~

~~50 W MH/120V.~~ CD INDEXED 5/98 5/16/98

~~Contact Stella Bustos at CLC (213) 725-6565, ext. 244.~~

CITY OF RIVERSIDE BUSINESS TAX CERT. NO. 104192
EXP. DATE 04/24/2002

STATE BOARD OF REGISTERED LANDSCAPE ARCHITECTS ARTHUR D GUY III EXP. 5-31-02 LIC. NO. 2214 STATE OF CALIFORNIA

BORTHWICK GUY BETTENHAUSEN
LANDSCAPE ARCHITECTS • PLANNERS
2212 DUPONT DRIVE • SUITE A • IRVINE, CA 92614 • TEL: (949) 476-8816 • FAX: (949) 476-8707

ART D. GUY 4-23-01 DATE

CITY OF RIVERSIDE PARKS DEPARTMENT

AUTHORIZED SIGNATURE 4/24/01 DATE

REGISTERED PROFESSIONAL ENGINEER DUANE K. GREENWOOD Exp. 6/30/97 CIVIL STATE OF CALIFORNIA

N HARDSCAPE PLAN

REGISTERED ARCHITECT KI SUH PARK C 4549 STATE OF CALIFORNIA

GRUEN ASSOCIATES
6330 San Vicente Blvd., Los Angeles, CA 90048 (213) 937-4270

REGISTERED LANDSCAPE ARCHITECT FREDERICK STEVEN ABELSON LIC. NO. 3524 9/30/96 Date STATE OF CALIFORNIA

LANDSCAPE ARCHITECT
RICK ABELSON
R.L.A No. 3524 expires 9/30/96
DATE

| MARK | REVISIONS | APPR. | DATE |
|---|---|---|---|
| 2 | CONSTRUCT MEDIAN OPENING | Ad | 4-23-01 |
| 1 | ADD SIDEWALK BANDING | [illegible] | 10/11/96 |

DESIGNED BY R.A. DRAWN BY F.C. CHECKED BY T.M.

CITY OF RIVERSIDE, CALIFORNIA
PUBLIC WORKS DEPARTMENT

| APPROVED BY | BY | DATE |
|---|---|---|
| DEPUTY P.W. DIRECTOR | [illegible] | 6/12/95 |
| PRINCIPAL ENGINEER | [illegible] | 6/3/95 |
| CHIEF P.W. INSPECTOR | | |
| TRAFFIC DIVISION | | |
| SURVEYOR | [illegible] | 5-1-99 |
| STREET DIVISION | | |
| PARKS DEPARTMENT | [illegible] | 5/31/95 |

~~APPROVED BY~~

~~[illegible]~~

DATE

UNIVERSITY AVENUE WIDENING
FROM OTTAWA AVENUE TO IOWA AVENUE
HORIZ. SCALE: 1" = 20'

R-3271

LH-4A

SHEET ____ OF ____

NOTE:
REFER TO CITY OF RIVERSIDE PUBLIC WORKS DEPARTMENT FOR SPECIFIC UNIVERSITY AVENUE STREET WIDENING CIVIL AND STRUCTURAL DETAILS AND SPECIFICATIONS FOR ARCHITECTURAL IMPROVEMENTS SHOWN ON THIS SHEET.

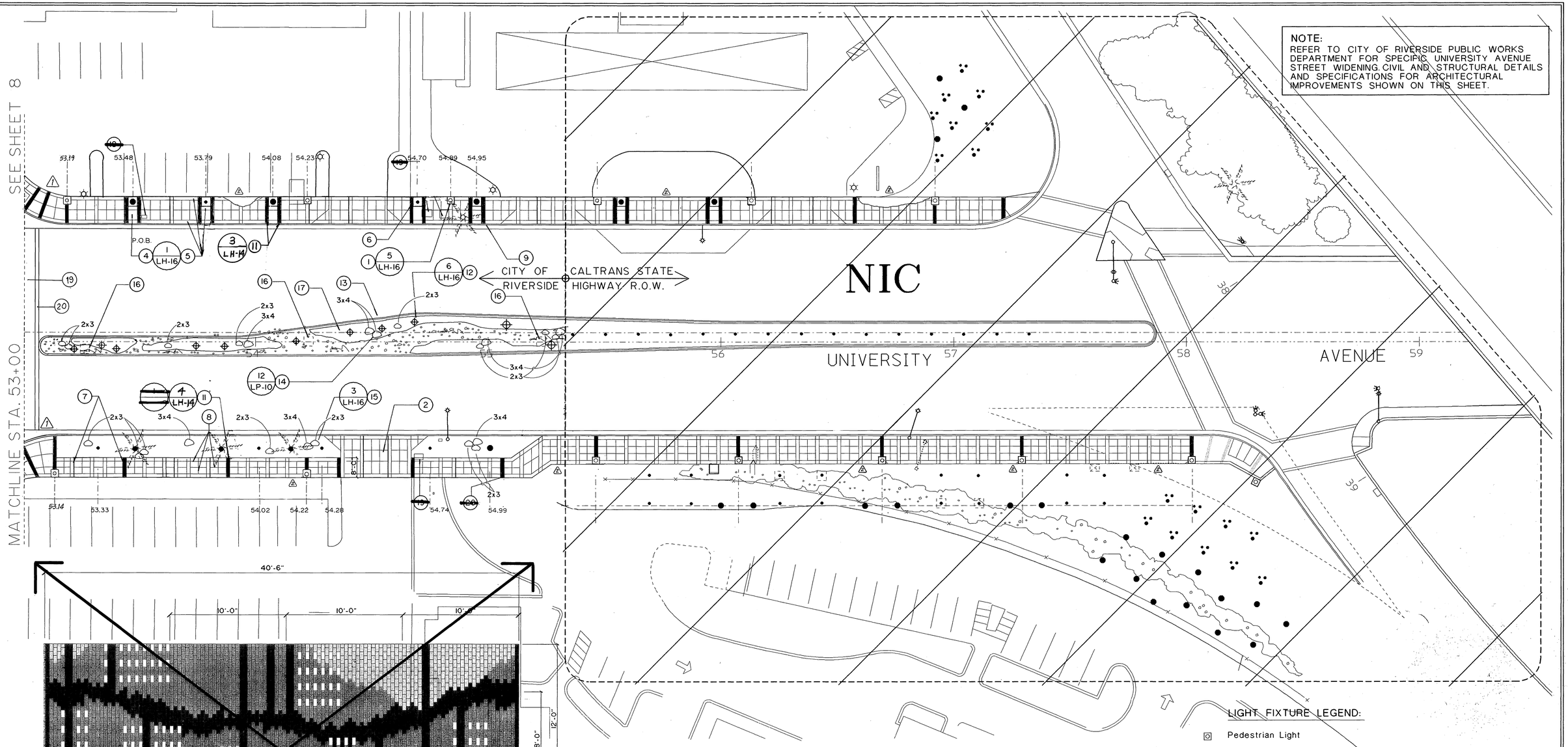


17. MEDIAN ISLAND LANDSCAPE AREA
18. ADDITIONAL LANDSCAPE EASEMENT ACQUISITION AREA
~~19. RELOCATE UTILITY SEE CIVIL PLANS~~
~~20. MIRROR INTERLOCKING PAVING PATTERN IN THIS 20'-0" LONG x 8'-0" WIDE AREA SHOWN REFER TO DETAIL 4 THIS SHEET~~
19. 8" THICK STAMPED CONCRETE CROSSWALK.
20. 18" WIDE CONCRETE BANDING.

11. ***4" THICK STAMPED CONCRETE PATTERN*** PERPENDICULAR TO UNIVERSITY AVENUE.
12. MEDIAN ISLAND TREE UPLIGHT
13. MEDIAN ISLAND CONCRETE CURB PER CITY OF RIVERSIDE PUBLIC WORKS STANDARD DETAIL
14. 3" TO 6" SALT RIVER ROCK SET IN MORTAR BED
15. WHITE WATER MOUNTAIN ROCK, SIZE VARIES PER PLAN, HEIGHT MATCHES THE SMALLER OF THE WIDTH AND LENGHT DIMENSION OF THE ROCK.
16. 4 FT. SQ. TREEWELL IN RIVER ROCK STREAM BED, RIVER ROCK UNGROUTED AND WITHOUT BASE WITHIN 4'-0" SQ.

KEYNOTES:

1. PEDESTRIAN LIGHT
2. DRIVEWAY APPROACHES PER CITY OF RIVERSIDE PUBLIC WORKS
~~3. DOUBLE COURSE BRICK BANDING~~
4. NATURAL GREY CONCRETE SIDEWALK WITH LIGHT TO MEDIUM BROOM FINISH
5. NATURAL GREY CONCRETE BANDING WITH SMOOTH WOOD FLOAT FINISH
6. 4 FEET SQUARE TREEWELL
7. EXPANSION JOINT
8. TOOLED SCORE JOINT
9. CONCRETE CURB AND GUTTER PER CITY OF RIVERSIDE PUBLIC WORKS
10. LANDSCAPE PARKWAY

LIGHT FIXTURE LEGEND:

- Pedestrian Light
  Luminaire: King RIV K199-EPR-II-100-HPS-240-KWGE-PBC. (Match Riverside Marketplace Project)
  Pole: Ameron Pole Products "The Corsican", model no. 20CT15, color 853 w/graffiti-resistant coatings. (Match Riverside Marketplace Project.)
- Median Island Tree Uplight
- ~~Custom Bell Shaped Luminaire~~
  ~~50 W MH/120V~~
  ~~Contact Stella Bustos at CLS (213) 735-6665, ext. 241~~

REGISTERED PROFESSIONAL ENGINEER
DUANE K. GREENWOOD
No. 43965
Exp. 6/30/97
CIVIL
STATE OF CALIFORNIA

5/16/95

INDEXED 598 CD

N HARDSCAPE PLAN

REGISTERED ARCHITECT
KI SUH PARK
C 4549
STATE OF CALIFORNIA

GRUEN ASSOCIATES
ARCHITECTURE · PLANNING · ENGINEERING
6330 San Vicente Blvd., Los Angeles, CA 90048 (213) 937-4270

REGISTERED LANDSCAPE ARCHITECT
FREDERICK STEVEN ABELSON
LIC. NO. 3524
9/30/96
Date
STATE OF CALIFORNIA

LANDSCAPE ARCHITECT
RICK ABELSON
R.L.A No 3524 expires 9/30/96
DATE

| MARK | REVISIONS | APPR | DATE |
|---|---|---|---|
| 2 | Changed Stamped Concrete in Sidewalk. RETURNS | RAD | 10/11/95 |
| 1 | REVISED MEDIANS AND ADDED CURB | RAD | 10/2/95 |

DESIGNED BY R.A. DRAWN BY jrp CHECKED BY RAD

CITY OF RIVERSIDE, CALIFORNIA
PUBLIC WORKS DEPARTMENT

| APPROVED BY | BY | DATE |
|---|---|---|
| ~~APPROVED BY~~ | | |
| DEPUTY P.W. DIRECTOR | RAD | 10/11/95 |
| PRINCIPAL ENGINEER | | |
| CHIEF P.W. INSPECTOR | | |
| TRAFFIC DIVISION | | |
| SURVEYOR | ~~RAD~~ | ~~5-15-95~~ |
| STREET DIVISION | | |
| PARKS DEPARTMENT | RAD | 5/16/95 |

DATE

UNIVERSITY AVENUE WIDENING
FROM OTTAWA AVENUE TO IOWA AVENUE
HORIZ. SCALE 1" = 20'

R-3271
LH-8.1
SHEET ____ OF ____

NOTE:
REFER TO CITY OF RIVERSIDE PUBLIC WORKS DEPARTMENT FOR SPECIFIC UNIVERSITY AVENUE STREET WIDENING. CIVIL AND STRUCTURAL DETAILS AND SPECIFICATIONS FOR ARCHITECTURAL IMPROVEMENTS SHOWN ON THIS SHEET.

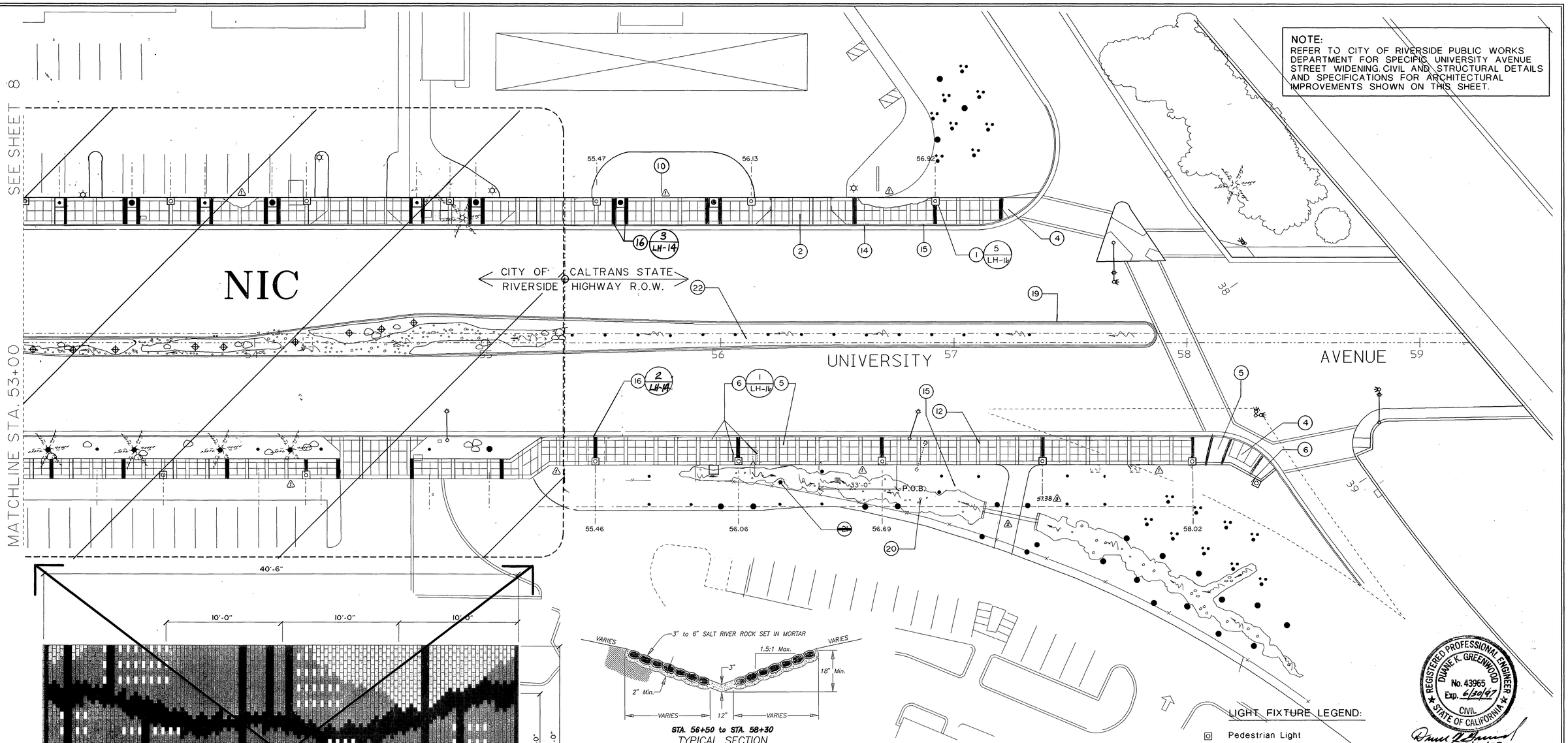


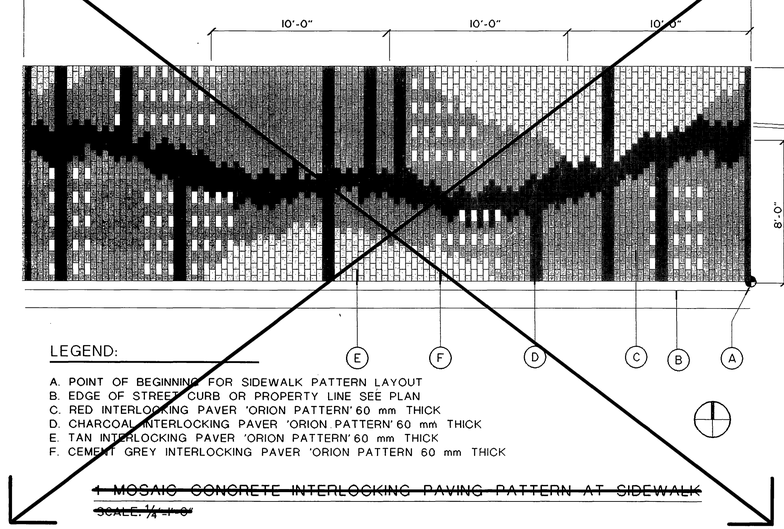


LEGEND:

A. POINT OF BEGINNING FOR SIDEWALK PATTERN LAYOUT
B. EDGE OF STREET CURB OR PROPERTY LINE SEE PLAN
C. RED INTERLOCKING PAVER 'ORION PATTERN' 60 mm THICK
D. CHARCOAL INTERLOCKING PAVER 'ORION PATTERN' 60 mm THICK
E. TAN INTERLOCKING PAVER 'ORION PATTERN' 60 mm THICK
F. CEMENT GREY INTERLOCKING PAVER 'ORION PATTERN 60 mm THICK

~~1 MOSAIC CONCRETE INTERLOCKING PAVING PATTERN AT SIDEWALK~~
~~SCALE: 1/4"=1'-0"~~




STA. 56+50 to STA. 58+30
TYPICAL SECTION
RIVER ROCK SWALE
NOT TO SCALE

20. 3" TO 6" SALT RIVER ROCK SET IN MORTAR
~~21. 4 FEET DIAMETER TREEWELL IN RIVER ROCK STREAM BED~~
22. MEDIAN ISLAND LANDSCAPE AREA
23. ADDITIONAL LANDSCAPE EASEMENT ACQUISITION AREA
~~24. RELOCATE TRAFFIC CONTROL BOXES~~
25. RELOCATED STREET LIGHT
~~26. EXTEND CULVERT TO MATCH 10 FT SIDEWALK~~
~~27. EXISTING CATCH BASIN PROTECT IN PLACE~~
~~28. RELOCATE BACKFLOW PREVENTER~~
~~11. METAL TRASH UNIT~~
12. EXPANSION JOINT
13. TOOLED SCORE JOINT
14. CONCRETE CURB AND GUTTER
15. LANDSCAPE PARKWAY
16. *4" THICK STAMPED CONCRETE BANDING*, PERPENDICULAR TO UNIVERSITY AVENUE.
~~17. 18 INCHES WIDE CONCRETE BANDING~~
~~18. CUSTOM BELL SHAPED LUMINAIRE AT BUS SHELTER~~
19. MEDIAN ISLAND CONCRETE CURB

KEYNOTES:

1. PEDESTRIAN LIGHT
2. DRIVEWAY APPROACHES
~~3. DOUBLE COURSE BRICK BANDING~~
4. CURB RAMP
5. NATURAL GREY CONCRETE SIDEWALK WITH LIGHT TO MEDIUM BROOM FINISH
6. NATURAL GREY CONCRETE BANDING WITH SMOOTH WOOD FLOAT FINISH
7. 4 FEET SQUARE TREEWELL
~~8. BUS SHELTER STRUCTURE COLUMNS~~
~~9. PLANTER POT~~
10. ~~X~~ 4.5 FEET METAL BENCH

LIGHT FIXTURE LEGEND:

◎ Pedestrian Light

Luminaire: King RIV K199-EPR-IL-100-HPS-240-KWGE-PBC. (Match Riverside Marketplace Project)

Pole: Ameron Pole Products "The Corsican", model no. 20CT15, color 853 w/graffiti-resistant coatings. (Match Riverside Marketplace Project.)

⊕ Hydrel 9300L A MH70/*240V*/JBA-01 or equivalent.

**GENERAL NOTE**

CONCRETE FLATWORK WITHIN THE STATE RIGHT OF WAY SHALL BE FURNISHED AND INSTALLED IN ACCORDANCE WITH THE PROVISIONS OF SECTION 73 CONCRETE CURBS AND SIDEWALKS OF CALTRANS STANDARD SPECIFICATIONS.

REGISTERED PROFESSIONAL ENGINEER
DIANE K. GREENWOOD
No. 43965
Exp. 6/30/97
CIVIL
STATE OF CALIFORNIA
5/16/95

REVISED PLAN
CalTrans Permit No.
08-95-N-MC-0240

INDEXED 5/98 CD

N HARDSCAPE PLAN

REGISTERED ARCHITECT
N. SUH PARK
C 4549
STATE OF CALIFORNIA

GRUEN ASSOCIATES
ARCHITECTURE PLANNING ENGINEERING
6330 San Vicente Blvd., Los Angeles, CA 90048 (213) 937-4270

REGISTERED LANDSCAPE ARCHITECT
FREDERICK STEVEN ABELSON
LIC. NO. 3524
9/30/96
Date
STATE OF CALIFORNIA

LANDSCAPE ARCHITECT
RICK ABELSON
R.L.A. No. 3524 expires 9/30/96
DATE

| MARK | REVISIONS | APPR | DATE |
|---|---|---|---|
| 1 | Relocated Ped. Lt. At Sta. 57+38. | RA | 3/5/96 |
| 2 | Added Sidewalk, Pipe Culvert & Rel. Ped. Lt. | RA | 10/24/96 |
| 3 | Changed Stamped Concrete in Sidewalk. | RA | 10/1/96 |

DESIGNED BY R.A. DRAWN BY jrp CHECKED BY RA

CITY OF RIVERSIDE, CALIFORNIA
PUBLIC WORKS DEPARTMENT

| APPROVED BY | BY | DATE |
|---|---|---|
| DEPUTY P.W. DIRECTOR | ~~RAL~~ | ~~6/18/96~~ |
| PRINCIPAL ENGINEER | RA | 6/20/96 |
| CHIEF P.W. INSPECTOR | | |
| TRAFFIC DIVISION | | |
| SURVEYOR | 5-18-96 MASON | |
| STREET DIVISION | | |
| PARKS DEPARTMENT | MM | 5/31/95 |

~~APPROVED BY~~
DATE

UNIVERSITY AVENUE WIDENING
FROM OTTAWA AVENUE TO IOWA AVENUE
HORIZ. SCALE 1" = 20'

R-3271
LH-8.2
SHEET ____ OF ____